Leviton All-in-One Meter Load Center Combination Panels

Semi-Flush Mount, Over-Under Construction, Ring Type, UG/OH[2] Service Entrance, EUSERC

APPLICATION

Leviton's portfolio of Meter-Load Center Combination Panels, also called "All-in-Ones," are Electric Utility Service Equipment Requirements Committee (EUSERC) and California Title 24[1] compliant, making them perfect for applications with Solar.

The panels feature an award-winning installation design that makes them the ideal solution for integrating alternative energy sources into any residential system.

FEATURES AND BENEFITS

- In compliance with standards UL 67, UL 50, UL 50E, UL869A, EUSERC - SEC. 300, NEMA type 3R
- Semi flush, Underground feed/Overhead feed capable[2]
- 5th jaw accessory available at 9 o'clock or 6 o'clock position
- Factory installed main breaker in main breaker catalogs
- Solar-ready for future installations
- Provision for two field-install CTs
- Powder coated
- Tin Plated Copper bussing on all models for superior quality and conductivity
- Up to 225A bussing for solar photovoltaic (PV) backfeed

THE LEVITON LOAD CENTER ADVANTAGE

Easy Installation

Allows for all wiring at rough-in[3], without any circuit breakers present. Our all plug-on design increases efficiency and provides room for hands to move and work freely.

Safer

As the first GFCI circuit breakers on the market that met the newest/May 2021 UL requirements[4], Leviton GFCIs set the bar for home safety. Leviton AFCI, GFCI, and dual-function circuit breakers feature patented reset lockout technology, and will not reset if Ground or Arc Fault protection is compromised.

Optional Smart[5]

Remote monitoring, tripping and firmware updates.

[1] California Title 24, Section 110.10

[2] OH Service Application requires the use of the applicable Overhead Tunnel Kit

[3] For applications up to 60A when using copper wire; or 50A when using aluminum wire

[4] The UL943 standard no longer exempts GFCI circuit breakers from detecting and warning when the trip solenoid and/or switching semiconductor fails in the "open" state, rendering the GFCI circuit breaker incapable of tripping in response to a fault condition, resulting in complete loss of GFCI protection. However, the effective date of this requirement is 8/11/24. Leviton GFCIs have always met the more stringent safety requirement.

[5] Requires Smart Hub (LDATA) and Smart Circuit Breakers

Leviton Mfg. Co., Inc.
201 North Service Road, Melville, NY 11747 Tech Line: 1-800-824-3005 Fax: 1-800-832-9538 www.leviton.com
© 2022 Leviton Manufacturing Co., Inc. All rights reserved. Subject to change without notice.

DIMENSIONAL DRAWINGS

Meter-Load Center Combination, All-in-One, Semi-Flush Mount, UG/OH Service Entrance, 12 Space

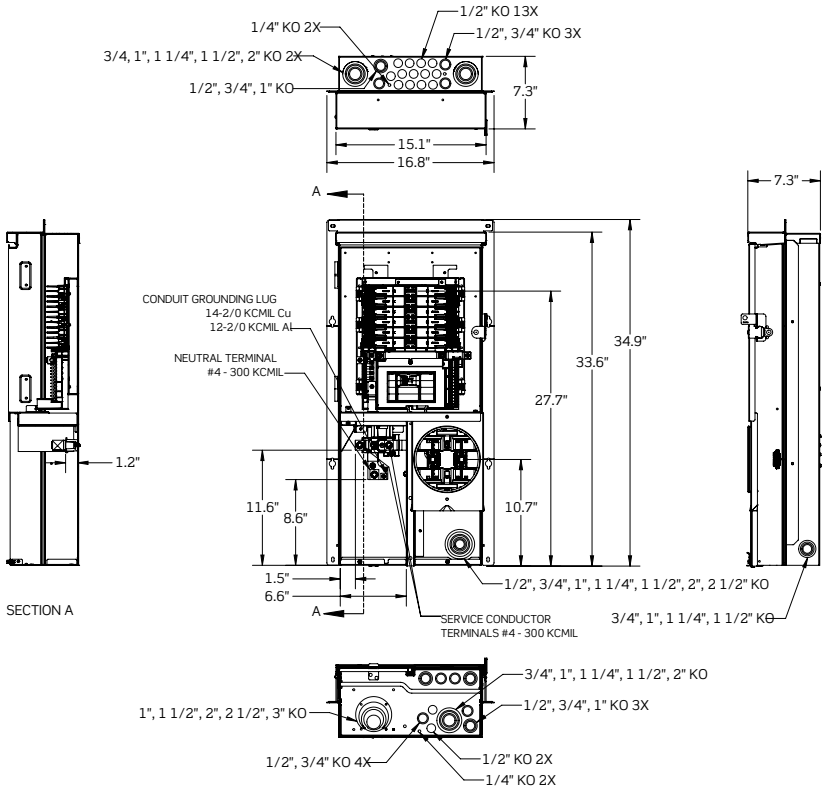

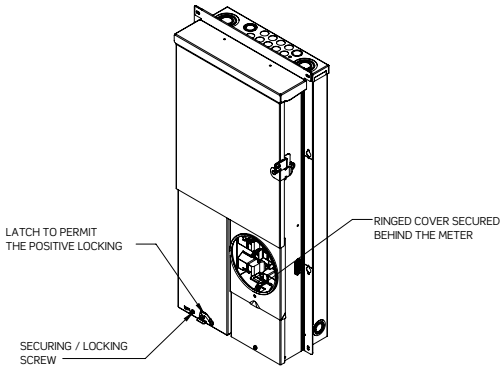

Maximum Ampacity	Catalog Number	Enclosure Material	Service Application	Phase	Number of Jaws	Types of Bypass	Type of Cover	Opening for Underground Conduit	EUSERC Reference Drawing Number	Number of Branch Breaker Positions
Main Breaker Factory Installed										
100	LG110-BED	Galvanized Steel	UG/OH[2]	Single	4	None	Ring Type	3" Maximum	301	12
125	LG112-BED	Galvanized Steel	UG/OH[2]	Single	4	None	Ring Type	3" Maximum	301	12
200	LG120-BED	Galvanized Steel	UG/OH[2]	Single	4	None	Ring Type	3" Maximum	301	12
Main Lugs Only										
225	LG122-LED	Galvanized Steel	UG/OH[2]	Single	4	None	Ring Type	3" Maximum	301	12

[2] *OH Service Application requires the use of the Overhead Tunnel Kit (LOTK1)*

DIMENSIONAL DRAWINGS

Meter-Load Center Combination, All-in-One, Semi-Flush Mount, UG/OH Service Entrance, 30 Space

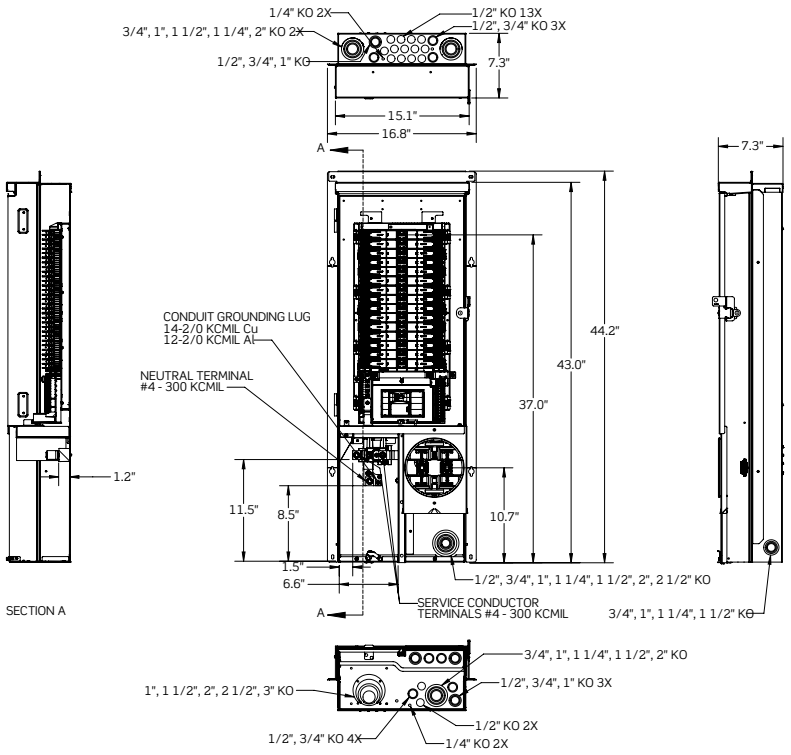

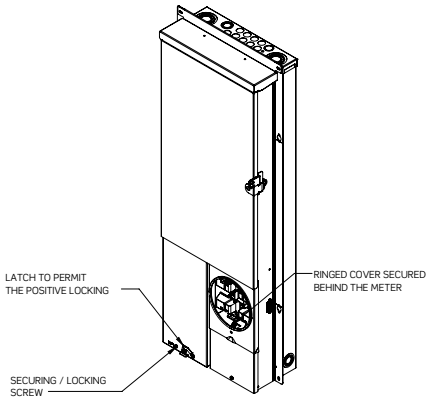

Maximum Ampacity	Catalog Number	Enclosure Material	Service Application	Phase	Number of Jaws	Types of Bypass	Type of Cover	Opening for Underground Conduit	EUSERC Reference Drawing Number	Number of Branch Breaker Positions
100	LG310-BED	Galvanized Steel	UG/OH[2]	Single	4	None	Ring Type	3” Maximum	301	30
125	LG312-BED	Galvanized Steel	UG/OH[2]	Single	4	None	Ring Type	3” Maximum	301	30
200	LG320-BED	Galvanized Steel	UG/OH[2]	Single	4	None	Ring Type	3” Maximum	301	30

[2] OH Service Application requires the use of the Overhead Tunnel Kit (LOTK3)

DIMENSIONAL DRAWINGS

Meter-Load Center Combination, All-in-One, Semi-Flush Mount, UG/OH Service Entrance, 40 Space

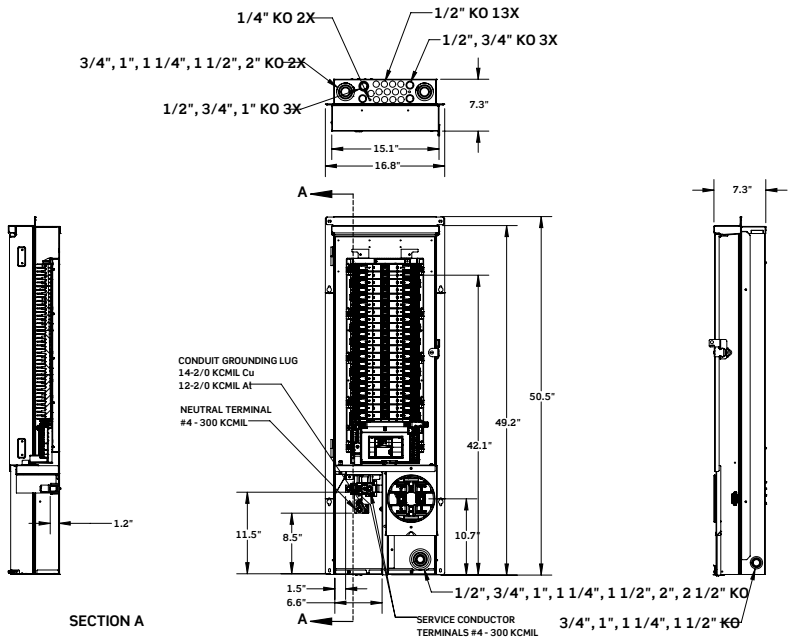

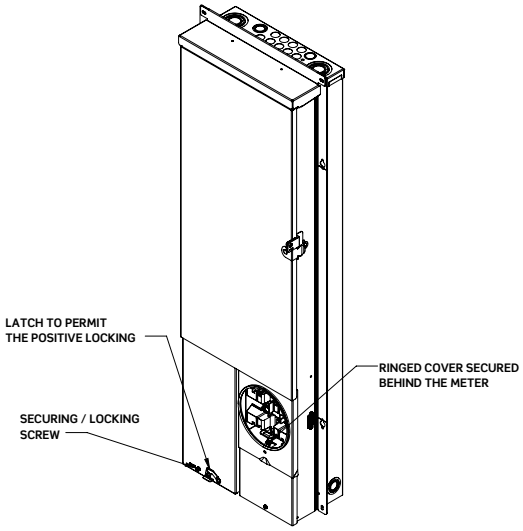

Maximum Ampacity	Catalog Number	Enclosure Material	Service Application	Phase	Number of Jaws	Types of Bypass	Type of Cover	Opening for Underground Conduit	EUSERC Reference Drawing Number	Number of Branch Breaker Positions
200	LG420-BED	Galvanized Steel	UG/OH[2]	Single	4	None	Ring Type	3" Maximum	301	40
225	LG422-BED	Galvanized Steel	UG/OH[2]	Single	4	None	Ring Type	3" Maximum	301	40

[2] OH Service Application requires the use of the Overhead Tunnel Kit (LOTK4)

THE LEVITON LOAD CENTER

Leviton Manufacturing Co., Inc.
201 North Service Road, Melville, NY 11747-3138
Telephone: 1-800-323-8920 • Tech Line: 1-800-824-3005
Mon-Fri 8am-10pm EST, Saturday 9am-7pm EST, Sunday 9am – 5pm EST
Visit our Website at: www.leviton.com/loadcenter

© 2022 Leviton Manufacturing Co., Inc. All rights reserved.