Mounted Zone Cabling Enclosures and Brackets
Industrial ReBox Accessory
Pole Kit Mounting Bracket

HUBBELL

Features

- Mount 24” wide Industrial ReBox enclosures to poles for outside or inside use
- Stainless steel strap wraps around round or multi-sided poles

Ordering Information

Description	Finish	UPC Number	Catalog Number
Industrial Rebox, Pole Mount Kit	Gray Polyester	662620658971	**IRPKSG**

Listings

Outdoor Rated

Specifications

Material	Steel
Finish	Gray Polyester
Maximum Pole Diameter	14"
Bracket Capacity	350 lb
Strap Length	48"
Mounts to	Pole diameter 14" or smaller

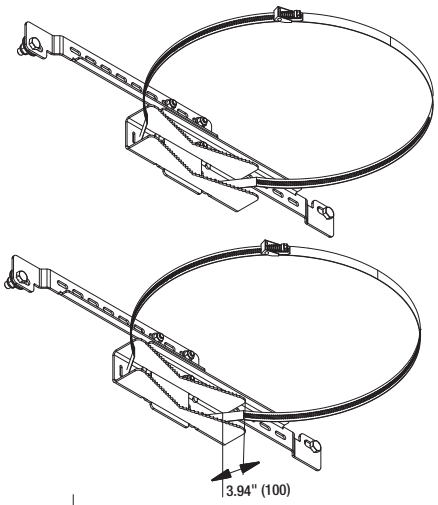

Accessories

Heating Thermostat:	CTKH
3' Industrial Rebox	IR321PG
250 Watt Heater	IRH250
Relay Rack with Cable Managers	CS1976H

Resources

Customer Drawing
Wall Mount Brochure