EZ-MAX™ H SERIES - Lighting Control Panel

Cat. No. R24BD

Installation Manual

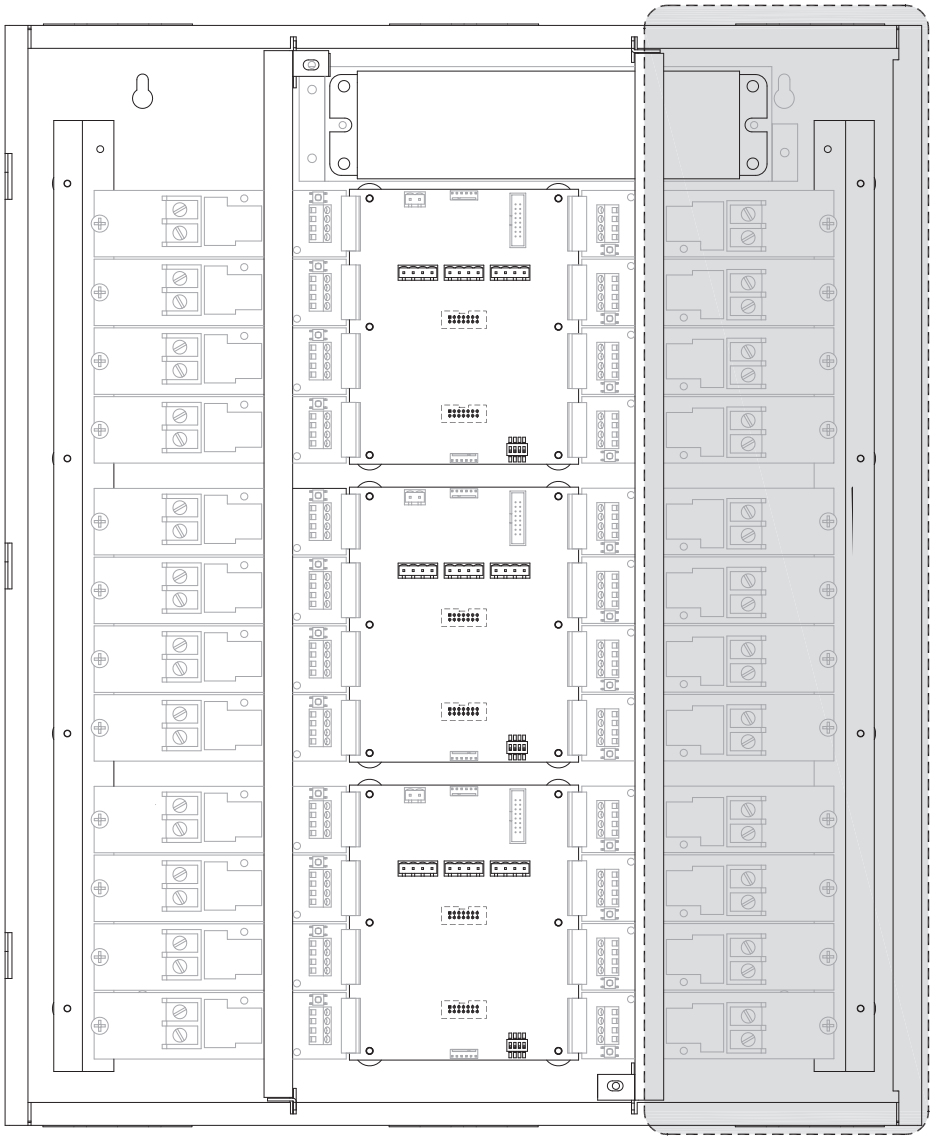

PK-A3454-10-00-0A

TABLE OF CONTENTS

1 Warnings and Cautions 1
2 Product Description and Configuration 3
3 Installation Preparation 4
4 Removing the Panel Door (Optional) 5
5 Mounting Instructions 6
6 Connecting Panel Power 8
7 Connecting Lighting Loads 9
8 Connecting Low-Voltage Inputs 10
9 Replacing the EZ-MAX H Series Controller Battery 11
10 Operating Panel 12
11 What to do if 13
12 EZ-MAX H Series Panel Specifications 14
13 Standard Statements and Warranty 15

1 WARNINGS AND CAUTIONS

WARNINGS:
- **TO AVOID FIRE, SHOCK OR DEATH: TURN OFF POWER AT CIRCUIT BREAKER OR FUSE AND TEST THAT THE POWER IS OFF BEFORE WIRING!**
- **TO AVOID PERSONAL INJURY OR PROPERTY DAMAGE, DO NOT** install to control a receptacle, or a load in excess of the specified rating.
- Always disconnect the power supply from the panel's main board prior to making any connections between relay boards and the main board. Failure to do so, may result in personal injury, damage to the panel, and void its warranty.
- To be installed and/or used in accordance with electrical codes and regulations.
- If you are not sure about any part of these instructions, consult an electrician.
- A disconnect switch or a circuit breaker must be provided and marked as the disconnecting device.
- Make sure the device ratings are suitable for application prior to installation.
- The use of accessory equipment, not recommended by the manufacturer, may cause an unsafe condition.

CAUTIONS:
- If any emergency circuits are fed or controlled from this panel, they must be located electrically where fed. For example, from a UPS, generator, or other guaranteed power source during emergency and power outage situations.
- If the equipment is used in a manner not specified by the manufacturer, the protection provided by the equipment may be impaired.
- All terminations inside the panel enclosure must be installed by a licensed electrician within national and local electrical codes.
- For indoor use only.
- **DO NOT** mount near gas or electric heaters.
- No user serviceable components. **DO NOT** attempt to service or repair.
- Use this device **WITH COPPER OR COPPER-CLAD WIRE ONLY**.

ADVERTENCIAS:
- **PARA EVITAR INCENDIO, DESCARGA ELÉCTRICA O LA MUERTE, ¡APAGUE LA ELECTRICIDAD EN EL INTERRUPTOR DE CIRCUITO O FUSIBLE Y COMPRUEBE QUE LA ELECTRICIDAD ESTÉ APAGADA ANTES DE CABLEAR!**
- **PARA EVITAR LESIONES PERSONALES O DAÑOS A LA PROPIEDAD, NO** lo instale para controlar un receptáculo o una carga que exceda la capacidad nominal especificada.
- Desconecte siempre la alimentación eléctrica del tablero principal del panel antes de llevar a cabo cualquier conexión entre los tableros del relé y el tablero principal. De no hacerlo, se pueden provocar lesiones personales, daños en el panel y se anulará su garantía.
- Debe ser instalado y/o utilizado de conformidad con los códigos y reglamentos eléctricos.
- En caso de que tenga alguna duda con relación a cualquier parte de estas instrucciones, consulte a un electricista.
- Deberá suministrarse un interruptor de desconexión o un interruptor de circuito y deberá marcarse como el dispositivo de desconexión.
- Asegúrese de que las capacidades nominales del dispositivo sean adecuadas para la aplicación antes de la instalación.
- El uso de equipo accesorio no recomendado por el fabricante puede provocar una condición insegura.
- The use of accessory equipment, not recommended by the manufacturer, may cause an unsafe condition.

PRECAUCIONES:
- En caso de que cualquier circuito de emergencia sea alimentado o controlado desde este panel, éstos deben ser ubicados eléctricamente donde son alimentados. Por ejemplo, desde un UPS, generador u otra fuente de energía garantizada durante situaciones de emergencia y cortes de energía.
- Si el equipo es utilizado de una manera no especificada por el fabricante, podría verse afectada la protección proporcionada por el equipo.
- Todas las terminaciones dentro de la caja del panel deben ser instaladas por un electricista autorizado de conformidad con los códigos eléctricos nacionales y locales.
- Tienda el cableado de bajo voltaje y el cableado de voltaje de línea dentro de sus respectivos compartimientos.
- Para uso en interiores únicamente.
- **NO** realice el montaje cerca de calentadores de gas o eléctricos.
- No hay componentes que el usuario pueda reparar. **NO** intente dar mantenimiento ni reparar.
- Utilice este dispositivo con **ALAMBRE DE COBRE O REVESTIDO DE COBRE ÚNICAMENTE**.

Para la hoja de instrucciones en español, vaya a www.leviton.com.

AVERTISSEMENTS
- **POUR ÉVITER LES RISQUES D'INCENDIE, DE DÉCHARGE OU D'ÉLECTROCUTION, COUPER LE COURANT AU FUSIBLE OU AU DISJONCTEUR ET S'ASSURER QUE LE CIRCUIT EST HORS TENSION AVANT DE PROCÉDER À L'INSTALLATION!**
- **POUR ÉVITER LES DOMMAGES MATÉRIELS ET LES LÉSIONS CORPORELLES, NE PAS** utiliser le produit décrit aux présentes pour commander une prise ou un appareil aux valeurs dépassant celles prescrites.
- Il faut toujours déconnecter l'alimentation de la carte principale avant d'effectuer des connexions entre cette dernière et les relais. Omettre cette étape pourrait entraîner des dommages au panneau ou des blessures corporelles, tout en ayant pour effet d'annuler toute garantie.
- Le produit décrit aux présentes doit être installé et utilisé conformément aux codes de l'électricité en vigueur.
- À défaut de bien comprendre les présentes directives, en tout ou en partie, on doit faire appel à un électricien.
- Le circuit utilisé doit être doté d'un sectionneur ou d'un disjoncteur identifiés comme tels.
- Avant de procéder à l'installation, il faut s'assurer que les valeurs nominales du dispositif conviennent à l'usage qu'on veut en faire.
- L'utilisation d'accessoires non recommandés par le fabricant pourrait engendrer des conditions dangereuses.

MISES EN GARDE
- Si des circuits d'urgence (unité d'ASC, génératrice ou autre source sûre en situation de panne ou d'urgence) sont reliés à un panneau, ils doivent être situés électriquement là où ils sont alimentés.
- Si le produit décrit aux présentes est utilisé d'une manière autre que celle prescrite par le fabricant, la protection qu'il offre pourrait être compromise.
- Toutes les terminaisons à l'intérieur d'un panneau doivent être effectuées par un électricien agréé conformément aux codes locaux et nationaux de l'électricité.
- Les fils à basse tension et à tension régulière doivent rester dans leurs compartiments respectifs.
- Le produit décrit aux présentes est conçu pour l'intérieur seulement.
- **NE PAS** installer le produit décrit aux présentes près de radiateurs électriques ou au gaz.
- Le produit décrit aux présentes ne contient aucun composant interne pouvant être réparé ou remplacé par les utilisateurs. Il ne faut jamais tenter d'en effectuer la maintenance.
- N'utiliser le produit décrit aux présentes QU'AVEC DU FIL DE CUIVRE OU PLAQUÉ CUIVRE.

On peut trouver les directives en français sur www.leviton.com.

2 PRODUCT DESCRIPTION AND CONFIGURATION

2.1 Description

The EZ-MAX H Series Lighting Control Panels are lighting control systems designed to control lighting loads and motor loads up to 2 HP. The system includes an enclosure, power supply and transformer, main board with Class 2 I/O user interface, and relay cards to control loads. The relay cards are an open-type accessory, which install inside the panel.

NOTE: The EZ-MAX panel enclosure and door are a complete assembly. The doors are not purchased separately.

2.2 Configuration

Characteristics		Load Ratings
Type	**Poles**	**VAC**
RELAY-L3H Latching	1	120
		277
		347
RELAY-2PH Electrically Held, N.O.	2	208
		240
		480

2.3 Panel Notes

- EZ-MAX H Series panels are manufactured empty without relays. Relays must be purchased separately, and installed in the field by a certified electrician.
- Relays are mounted with lighting circuit terminals in the line-voltage area of the panel. The low-voltage control inputs are in the low-voltage area of the panel.
- 2-pole relays take the same amount of space as 1-pole relays.
- For programming information, refer to the “EZ-MAX Panel Quick Start Guide,” provided as a separate document with the panel.
- All EZ-MAX panels come with two (2) door lock keys, which are taped to the interior.

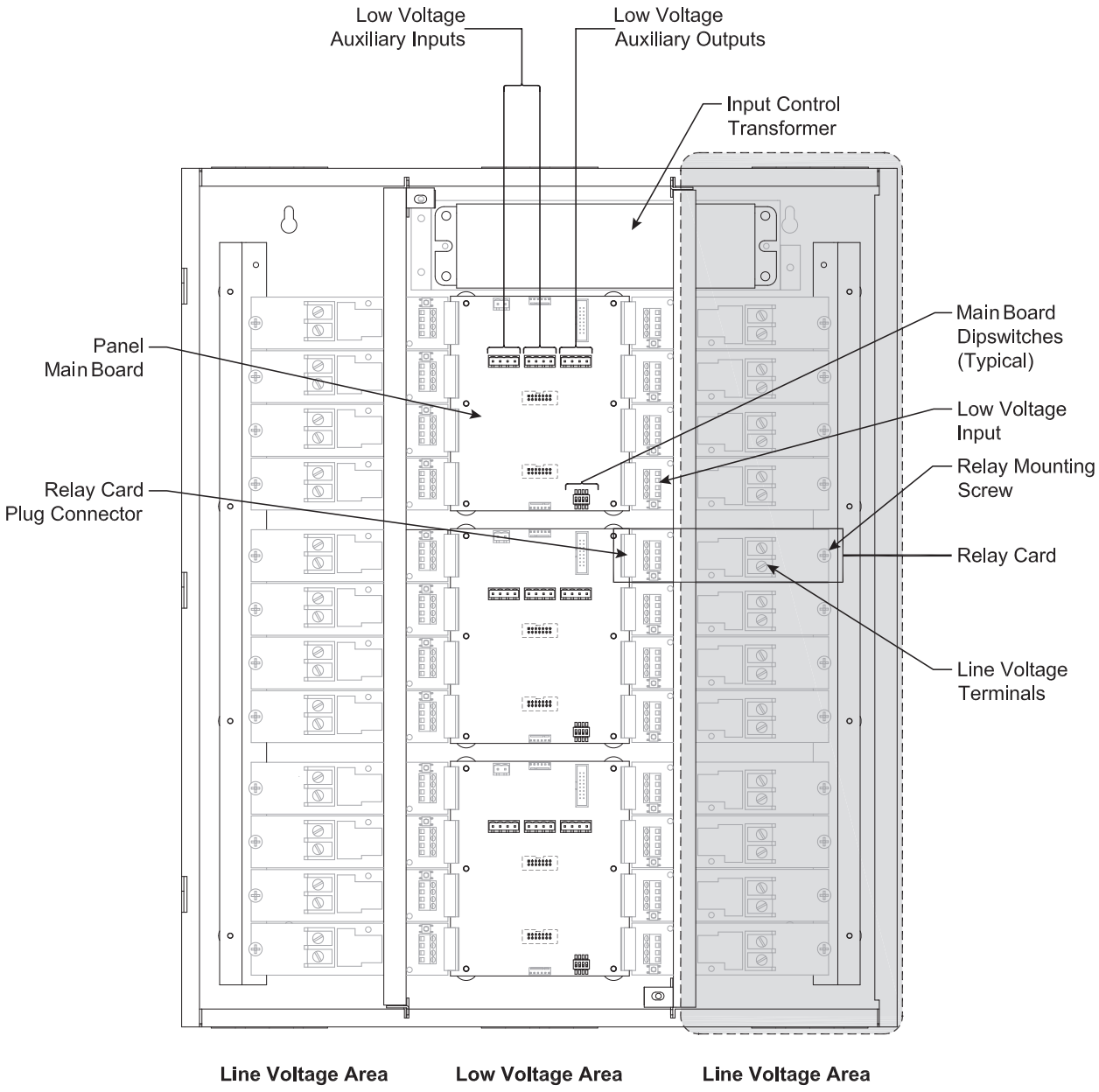

3 INSTALLATION PREPARATION

3.1 Prior to Installation

- Review this manual.
- Review site drawings.
- Verify a relay schedule has been provided.
- Make sure that an on-site contact confirms functionality, associated diagrams, and electrical bill of materials.
- **DO NOT** energize an EZ-MAX panel during installation or while replacing any components.

3.2 What You Will Need

- EZ-MAX H Series Panel (14.5 in. W x 17.0 in. H x 4.0 in. D)
- 1 - Construction Level
- Minimum of 4 - #12 Mounting Screws (Length and anchor support material to support the weight of the EZ-MAX panel and cables.)
- #2 x 4” Phillips-Head screwdriver (For EZ-MAX relay line-voltage terminals and EZ-MAX relay mounting screws.)
- 2.5 mm x 50 mm Precision flat-head screwdriver for low-voltage terminations.
- Wire Stripper/Cutter (Appropriate for low-voltage and line-voltage applications.)

3.3 Selecting a Location

You can install an EZ-MAX panel near a circuit breaker panel, or in the ceiling of the room where the lighting circuits are to be controlled. Select an appropriate location that meets the environmental conditions listed in the Specifications section of this document.

The panel interior is divided into line-voltage and low-voltage areas, as shown on the cover page. Select an appropriate location for incoming line-voltage panel power, branch circuits to be controlled, and low-voltage input wiring.

NOTES:

- The top and bottom parts of the enclosure come with seven (7) conduit openings and knockouts. Knockouts are approximately .06” (1.5 mm) in diameter.
- It is not necessary to locate all the branch circuit neutral cables in the EZ-MAX line voltage gutters. Doing so, may result in a cramped work space and increased complexity when servicing the panel in the future.
- All terminations within the panel enclosure must be installed by a licensed electrician in accordance with national and local electrical codes.
- Prior to mounting, it may be necessary to remove the panel door. (See the instructions on the next page.)
- You must remove the bottom four (4) relays prior to marking or attaching mounting screws to the main board. (See the instructions on “1. Remove the relay panel.” on page 6.)

4 REMOVING THE DOOR PANEL (OPTIONAL)

4.1 EZ-MAX H Series Door Removal

NOTE: DO NOT energize an EZ-MAX panel during installation or while replacing any components.

1. Pull the end piece off the main board to disconnect the EZ-MAX controller ribbon cable from the EZ-MAX controller ribbon connector.

2. Open the door slowly, locate the hinges, and lift the door to detach it from the enclosure.

3. Move the door to a safe place to ensure the controller is not damaged by field work.

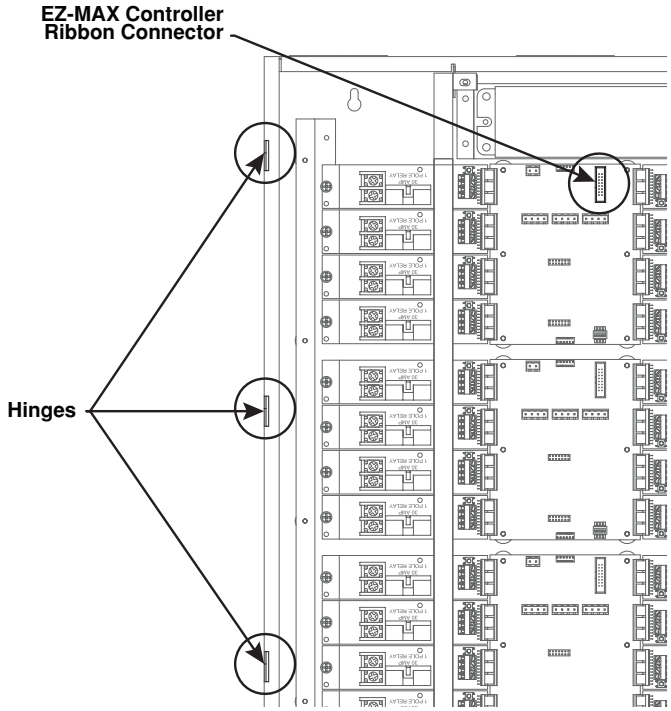

4.2 Attaching the EZ-MAX H Series Door

NOTE: DO NOT energize the EZ-MAX panel during installation or while replacing any components.

1. Align the door hinges and the enclosure, slide and rotate the door, and slide it into the hinge slots.

2. Connect the EZ-MAX H Series controller ribbon cable into the EZ-MAX H Series controller ribbon connector.

NOTE: DO NOT force the end connector of the ribbon cable into place.

5 MOUNTING INSTRUCTIONS

1. Remove the relay panel.

a. While holding the four (4) bottom relays to the mounting rails, use a Phillips-Head screwdriver to remove the mounting screws.

b. Gently pull and separate the relay from the main board's relay plug connector, but stay under the metal barrier.

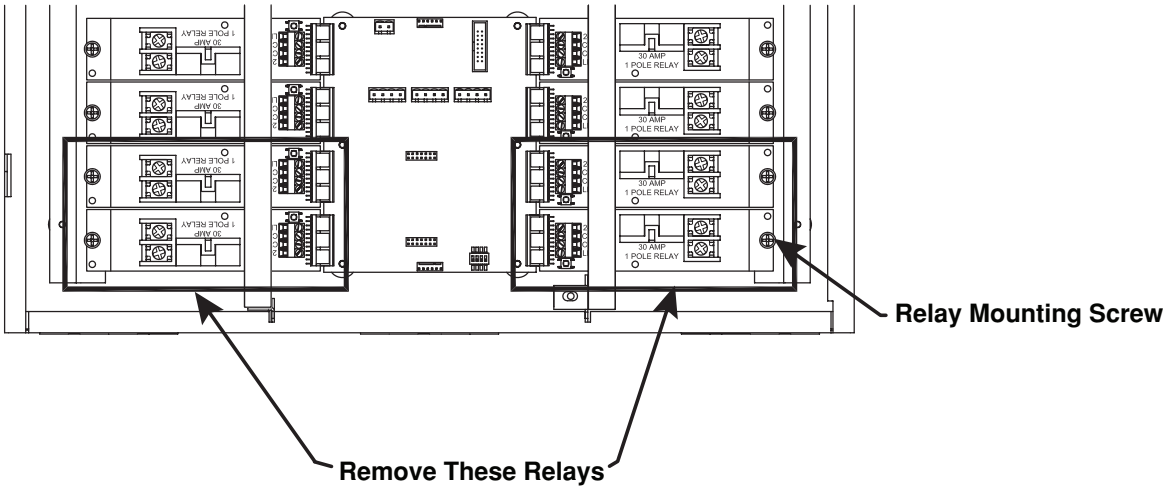

2. Place the enclosure on the mounting surface. Use a level to ensure that it is properly oriented and aligned.

3. In the four-keyed mounting holes (near the top and bottom of the enclosure), secure the enclosure to the mounting surface with hardware that is appropriate for the application.

4. After the panel is mounted and secured, reconnect the four EZ-MAX relays.

a. Navigate the relay card under the metal barrier.

b. Align the pins of the relay card with the relay plug connector, and press into the main board's connector.

c. Secure with the relay mounting screws.

d. Verify that the pins are aligned properly.

e. Remove any debris made by installation.

NOTE: It may be necessary to remove the door for mounting. See the "Removing the Door Panel (Optional)" section on page 5.

Relay Panel Shown with Bottom Relays Removed for Installation

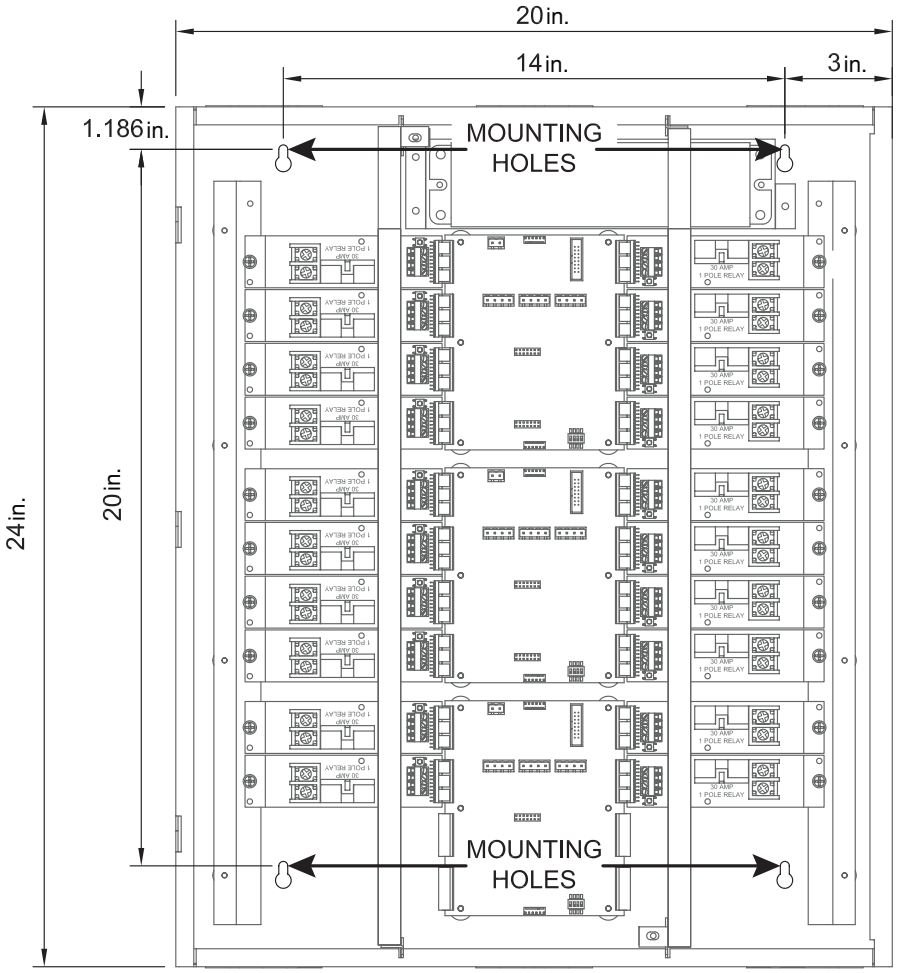

6 CONNECTING PANEL POWER

WARNINGS:

- When power is applied to the transformer, the unused transformer leads become electrified. Cap unused transformer leads with wire nuts to prevent an electrical short.
- Panel supply power must be de-energized during installation and servicing of the EZ-MAX panel.

The panel is designed to operate on 120,208, 240 or 277V AC input voltage. Panel input power is supplied to the power supply located in the upper-right of the panel, as shown in the image below. The output power to the EZ-MAX main board is in the upper-center channel of the panel.

1. Turn the power OFF.

2. Route the dedicated panel power supply leads to the transformer, and connect them to the appropriate system voltage specific leads.

3. Connect the power supply's ground lead to the panel chassis' grounding lug.

A label indicates that this ground lug is adjacent to the connection's location.

NOTES:

- The connections from supply power to the panel's power supply, is depicted on the input control power supply.
- If validation of the transformer output is required, the voltage output must be 24V DC, and you can test this from the low-voltage secondary leads connected to the low-voltage control input plug.

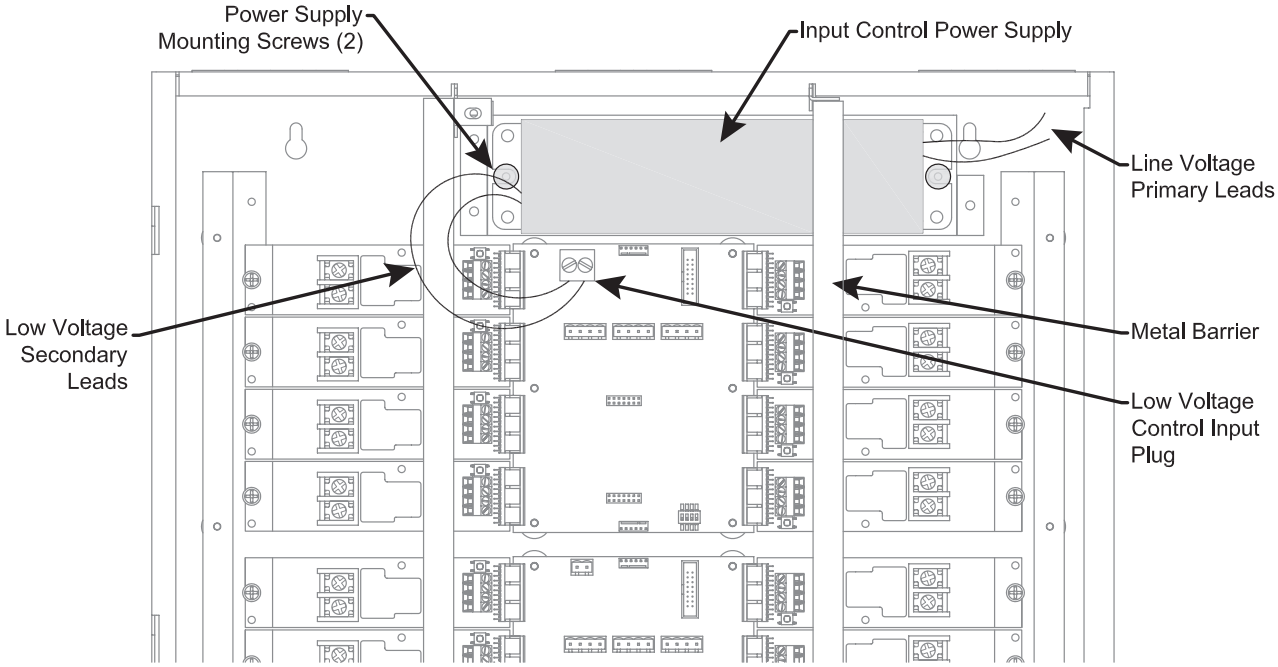

7 CONNECTING LIGHTING LOADS

WARNING: Prior to making any connections to the relay outputs, verify that the loads have not shorted. Failure to do so, may result in personal injury, damage to the panel, and void its warranty.

1. Turn the power OFF.

2. Route the lighting system line and load leads through the line-voltage area of the panel.

3. Connect line and load leads for each lighting load to the output terminals of the appropriate relay, as delineated in the project plans or panel load schedule.

NOTES:
- There are no neutral connections to EZ-MAX relays.
- If no panel load schedule exists, use the panel load schedule form supplied in the clear plastic pocket inside the panel door to record the lighting circuit relay assignments while connecting the relays.
- The panel ships with relays installed and electrically connected at their input control sides. However, if relays must be installed, refer to the applicable relay installation instructions, supplied with the individual relay cards.

Relay Connection Diagrams

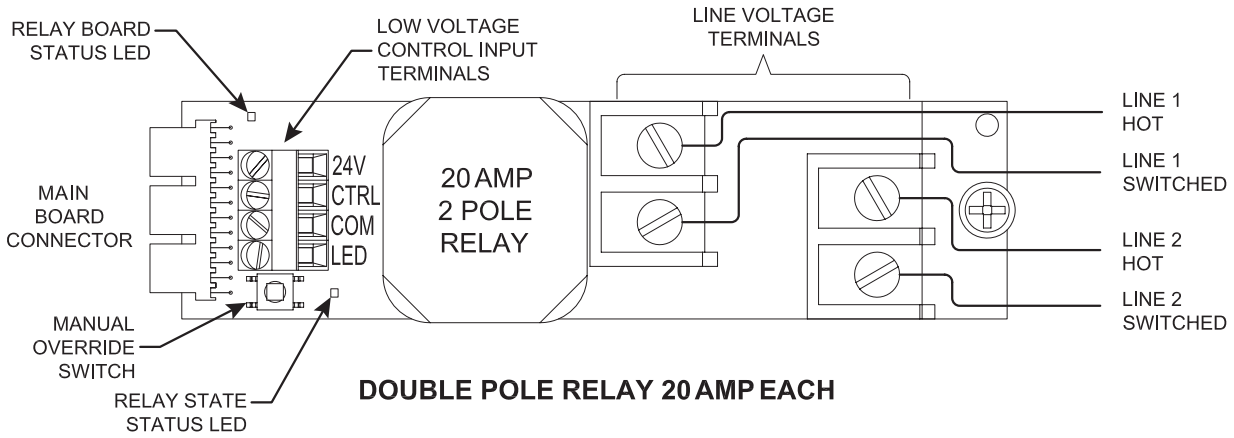

DOUBLE POLE RELAY 20 AMP EACH

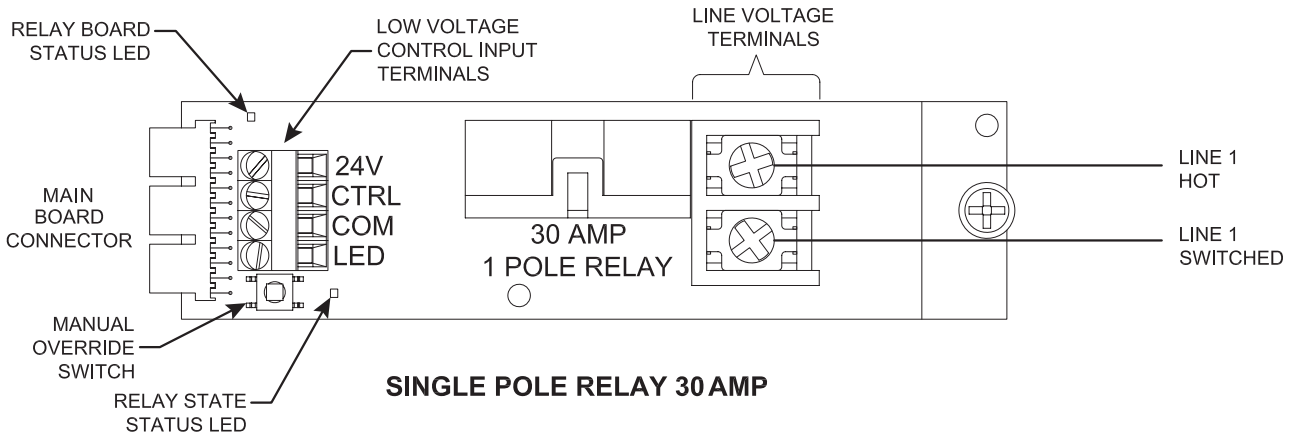

SINGLE POLE RELAY 30 AMP

8 CONNECTING LOW-VOLTAGE INPUTS

Bring the low-voltage wiring for the contact inputs in through the knockouts in the low-voltage wiring area where indicated in the image on the cover page. The typical connections for singular devices are: Wire size #14, 16, 18, 20, or 22 AWG. Tighten the terminal wire screws with 4 in-lb (0.45 N-m) of torque.

- Inputs can be programmed to support momentary switches, maintained switches (latching), motion sensors, or photo sensors.
- Each relay card includes one low-voltage input. You can connect the inputs prior to programming.
- Each main board includes two auxiliary inputs and one output with N.C. and N.O. dry contacts. You can connect the inputs prior to programming.
- You can connect any input device to any terminal location, regardless of final control programming.
- Connect contact closure input devices to the input terminals with #18 AWG wire.
- All relay inputs located on a relay card can control the relay to which they are affixed as a momentary N.O. contact. This is a default setting on the EZ-MAX H Series controller.
- Auxiliary inputs do not, by default, control anything. You can program the auxiliary inputs via the controller.

NOTES:

- Use the panel load schedule form supplied in the clear plastic pocket inside the panel door to record the low-voltage input types while making connections.
- Most input devices can be located up to 500+ feet away from the panel. Exact distances depend on quantity of devices, mixture of devices connected, and the gauge of the wire.
- It may be necessary to use an auxiliary power supply to power occupancy sensors, as there can be more sensors required than the panel can energize. If this is so, you must use an OPP20 Power Pack, which ensures that the Black (- COMMON) wires between the input, sensors, and power pack are interconnected.
- The EZ-MAX relay panels can power up to eight input devices, such as occupancy sensors, daylight sensors, and wall stations with pilot lights.

Photocell

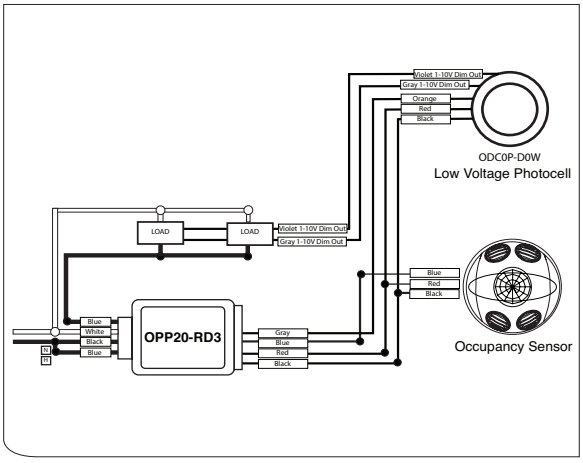

Occupancy Sensor

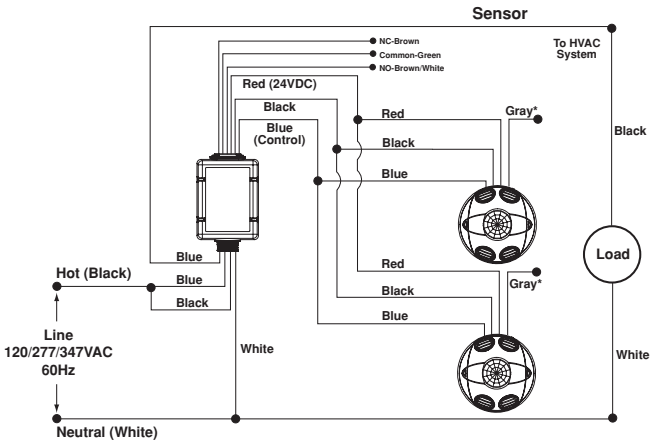

Low Voltage Switch

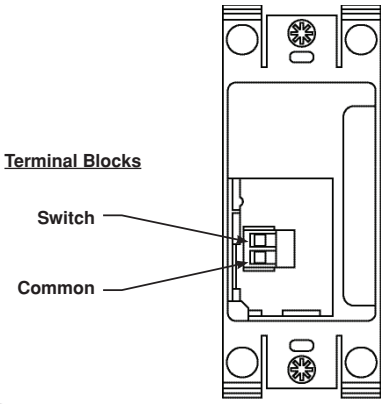

Low Voltage Switch with LED

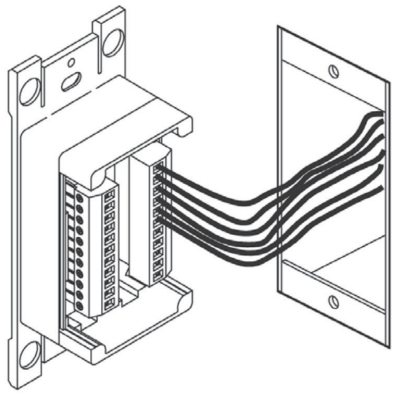

9 REPLACING THE EZ-MAX H SERIES CONTROLLER BATTERY

Battery back up for the time clock is located in the back of the EZ-MAX H Series Controller.

1. Turn OFF power to the EZ-MAX panel.

2. Remove the controller's metal stand-offs with a Phillips-head screwdriver and detach the controller. The battery is visible and reachable when detached from the EZ-MAX door.

3. Reassemble.

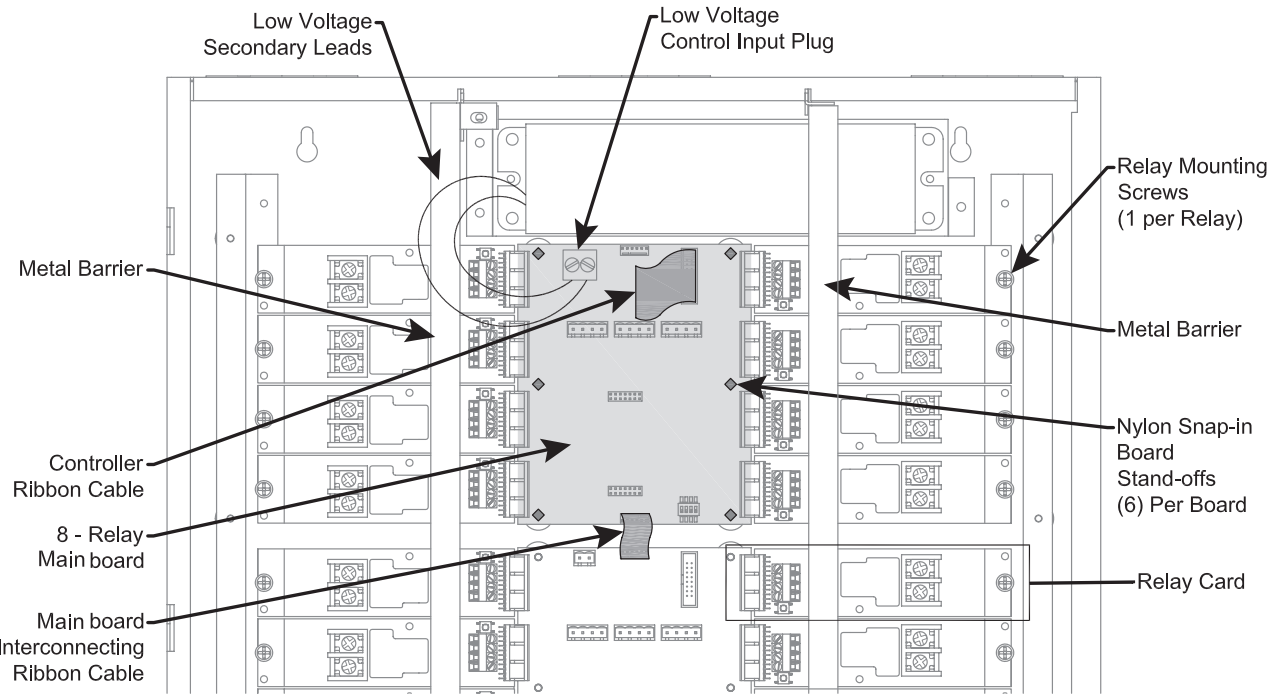

10 OPERATING PANEL

The user interface control ribbon cable connects between the user interface ribbon cable connector on the main board and the user interface module that is attached to the panel door.

Make sure that the red indicator in the cable aligns with the Pin 1 designation. The green ground jumper connects between the panel door and the panel housing's ground lug, labeled "GND".

Provide control power to the panel, and restore power to the lighting circuits at the source circuit breakers.

The panel takes a few moments to initialize, at which time the User Interface (UI) screen on the front of the panel door initiates and displays the clock, date, and time zone (factory default settings).

Inside the panel, the main board's power status LED shows a continuous green light. The relay board's status LED turns ON, and stays green for approximately 2 seconds, and then goes OFF.

Push, but do not hold the relay manual control button on each relay card to operate each relay, and to test functionality. The relay state status LED turns ON, and stays red when the relay is energized. The LED turns OFF when the relay is not energized.

The panel is fully functional and ready to control the lighting loads.

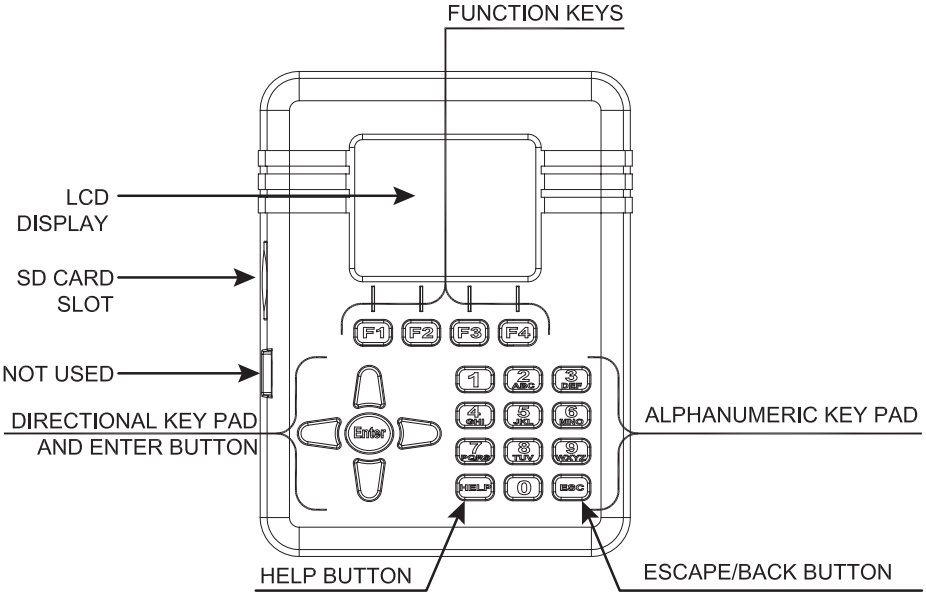

LCD Display: Provides an interface to visual programming. It shows time, and you can use it to troubleshoot issues with the panel.

SD Card Slot: When you insert an SD card, the EZ-MAX H Series panel provides a log of events automatically. You can download the text file to a PC, and review it while troubleshooting or validating programming. Logging shows time stamps and control events. In addition, you can load programming from another panel or to another panel to perform the same functions and share the same configuration.

Function Keys: Use for added functions, such as Edit and Save that are shown above them on the display.

Alphanumeric Keypad: Use to make selections, add or change names while programming. An additional function is the **ESC** button, which enables you to go back while programming. Press the **HELP** button to view a pop-up that provides a definition of the highlighted items on the screen.

Directional Keypad: Use to navigate through the EZ-MAX H Series panel's programming menu. Press the **ENTER** button to confirm your selection.

11 WHAT TO DO IF...

The relay board's status LED is blinking green.

- Communication has not been properly established with a relay card.
- Contact Leviton Technical Support at 1-800-824-3005 for assistance and replacement of the relay card.
- See the Troubleshooting Guide section in the "EZ-MAX Panel User Guide." Available for download at www.leviton.com.

Specifications						
Panel Input Power Requirements	120-277VAC universal					
Overall Dimensions	20 in. W x 24 in. L x 4 in. D					
Relay Load Ratings	**Type**	**VAC**	**Tungsten**	**Elec. Ballast**	**Mag. Ballast**	**SCCR**
	RELAY-L3H Latching Single Pole	120	20A	16A	30A	—
		277	—	16A	30A	—
	RELAY-2PH Elec. Held N.O. 2-Pole	208	—	—	20A	—
		240	—	—	20 A	—
		480	—	—	20 A	14 kA
Low Voltage Inputs	30 available **Low Voltage Switches** – momentary or maintained style, with or without LED indication. LED is ON when switch is active. LED is OFF when switch is inactive. **Motion Sensor Input** – three-wire 24V DC **Photocell** – three-wire 24V DC					
Output Relay Contacts	Three (3) dry contact outputs NO/NC, 24V AC/DC, 50mA					
Operating Environment	For indoor use only. 32°-112°F (0°-50°C) Relative humidity (non-condensing): 0-90%					
Accessory Components	Clock battery replacement: Purchased separately. Renata, Type CR2032 or equivalent RGBAR - EZ-MAX Voltage Barrier (2)					

13 STANDARD STATEMENTS AND WARRANTY

LEVITON, the Leviton logo, and EZ-MAX are trademarks of Leviton Manufacturing Co., Inc.

Patents covering this product, if any, can be found on www.leviton.com/patents.

Leviton Manufacturing Co., Inc.
201 North Service Road, Melville, NY 11747

© 2022 Leviton Manufacturing Co., Inc. All rights reserved.

Specifications and price subject to change at any time without notice.

FOR CANADA ONLY
For warranty information and/or product returns, residents of Canada should contact Leviton in writing at **Leviton Manufacturing of Canada ULC** to the attention of the **Quality Assurance Department, 165 Hymus Blvd, Pointe-Claire (Quebec), Canada H9R 1E9 or by telephone at 1-800-405-5320.**

LIMITED 5 YEAR WARRANTY AND EXCLUSIONS

Leviton warrants to the original consumer purchaser and not for the benefit of anyone else that this product at the time of its sale by Leviton is free of defects in materials and workmanship under normal and proper use for five years from the purchase date. Leviton's only obligation is to correct such defects by repair or replacement, at its option. **For details visit www.leviton.com or call 1-800-824-3005.** This warranty excludes and there is disclaimed liability for labor for removal of this product or reinstallation. This warranty is void if this product is installed improperly or in an improper environment, overloaded, misused, opened, abused, or altered in any manner, or is not used under normal operating conditions or not in accordance with any labels or instructions. **There are no other or implied warranties of any kind, including merchantability and fitness for a particular purpose**, but if any implied warranty is required by the applicable jurisdiction, the duration of any such implied warranty, including merchantability and fitness for a particular purpose, is limited to five years. **Leviton is not liable for incidental, indirect, special, or consequential damages, including without limitation, damage to, or loss of use of, any equipment, lost sales or profits or delay or failure to perform this warranty obligation**. The remedies provided herein are the exclusive remedies under this warranty, whether based on contract, tort or otherwise.

LEVITON®