Panel Extension Kit

Cat. Nos. E2X1F-BKT and E2X2F-BKT

WARNINGS:

- **TO AVOID FIRE, SHOCK, OR DEATH, TURN OFF POWER AT CIRCUIT BREAKER OR FUSE, AND TEST THAT POWER IS OFF BEFORE WIRING!**
- To be installed and/or used in accordance with appropriate electrical codes and regulations.
- If you are unsure about any part of these instructions, consult an electrician.

CAUTIONS:

- Test all network cables for proper pin-out configuration prior to interconnecting devices and systems.
- For indoor applications only.
- **Save these instructions.**

PK-A3409-10-00-5A

INSTALLATION INSTRUCTIONS **ENGLISH**

Product Description

The Panel Extension Kit consists of a pair of Extender Brackets, available in 1RU (Rack Unit) and 2RU heights.

Uses for Panel Extension Kit:

1. **For E2XHD Rear Cable Management:** The 1RU brackets may be used in situations where the equipment cabinet or 4-post rack vertical rails* have a profile that interferes with the mounting of the E2XHD Cable Management Shelf (E2X1F-CMB) onto a E2XHD Flat Patch Panel (E2X1F-S48 or E2X1F-E48).
2. **For Other Rear Cable Management:** The 1RU and 2RU brackets may be used in cabinet or 4-post rack* installations where the vertical rack rails are either just a flat flange or they present an interference when attempting to use any of the following rear cable managers:
   - 49006-AMB (Angled Rear Cable Management Bar)
   - 49005-DMB (High-Density Cable Management Bar)
   - 49258-TWB (Tie Wrap Bar)

   Note: These wire managers are all designed to be installed on the rear of a standard two-sided rack rail. In addition to solving possible cabinet vertical rail interferences, the Extender Brackets will also set these cable management bars farther back from the rear of the patch panel to enable optimal cable management utility.
3. **To Recess-Mount Flat Patch Panels:** The 1RU and 2RU Extender Brackets may also be used to recess Flat 1RU or 2RU Patch Panels. The Extender Brackets are NOT recommended for recessing angled patch panels, as the jacks at either end of the angled panels would not be easily accessible to users.

*Will work with most cabinet and 4-post rack vertical rails.

Brackets and Mounting Hardware

Extender Brackets
Note: Square holes are located at the rear of the brackets. Round holes are in the front.

1RU Brackets **2RU Brackets**

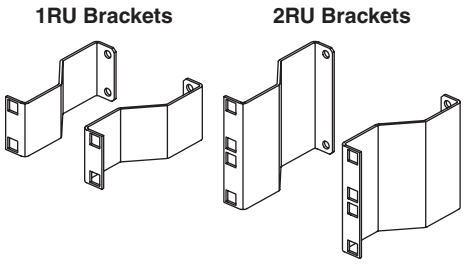

Cage Nuts (Not included)

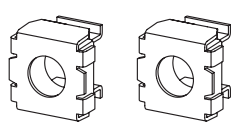

Hardware for the E2XHD Panel
Note: North-American grounding hardware is shown. UK panel has a different grounding/earthing method.

Rack-mount screws **Grounding hardware**

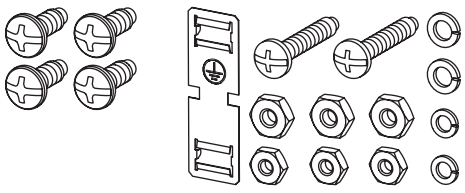

Hardware for the E2X1F-CMB
Note: If installation uses other hardware (10-32, M5, and M6 are all commonly used), then user may substitute the short and long rack-mount screws and the hex nuts to match the cage nuts that are in use for the site. For further details, please see the instruction sheet for the panel being used.

Rack-mount screws (12-24 x 1in.) **Hex nuts (12-24)**

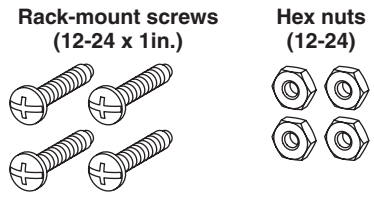

Use of the Extender Brackets with E2XHD Flat Patch Panel and E2X1F-CMB Rear Cable Manager

Potential Solutions with Use of Extender Brackets:

Solution: Extender Brackets provide proper setback for rear cable manager.

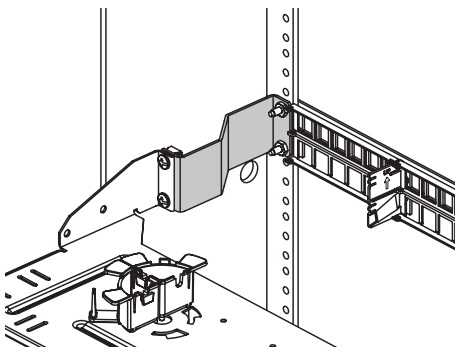

Solution: Extender Brackets avoid interfering rail profile and provide proper setback for cable manager.

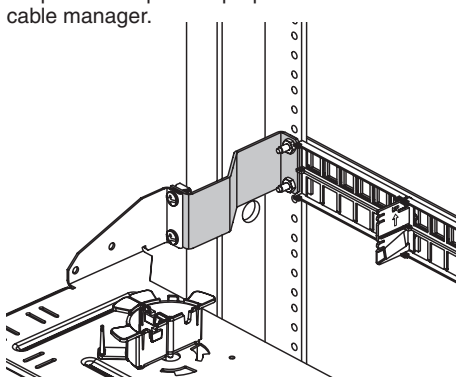

Note: 2-post racks may also exist, which have these flange-type vertical rails.

Installation

1. Prepare the Extender Brackets for use.

a. If installation will use the supplied hardware shown above, place 12-24 cage nuts in the square holes of both Extender Brackets.

Notes:
- If another hardware size will be used for installation, place the cage nuts for that size into the square holes of the Extender Brackets.

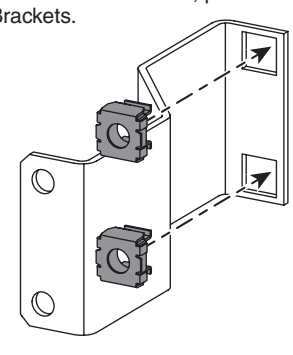

2. Mount Panel to Cabinet or Rack

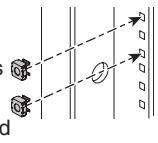

a. If your cabinet or rack has square-shaped holes, you will need to place cage nuts into them at the desired panel location. If the holes are circular, skip this step.

b. Per E2XHD Panel instructions, place the grounding clip behind the rear panel and secure it with a long rack-mount screw. **Note:** This screw is also the grounding stud for the panel.

c. Take 3 more long rack-mount screws from the E2X1F-CMB hardware kit and secure the other 3 corners of the panel. **Note:** US grounding is illustrated here. UK grounding/earthing method differs.

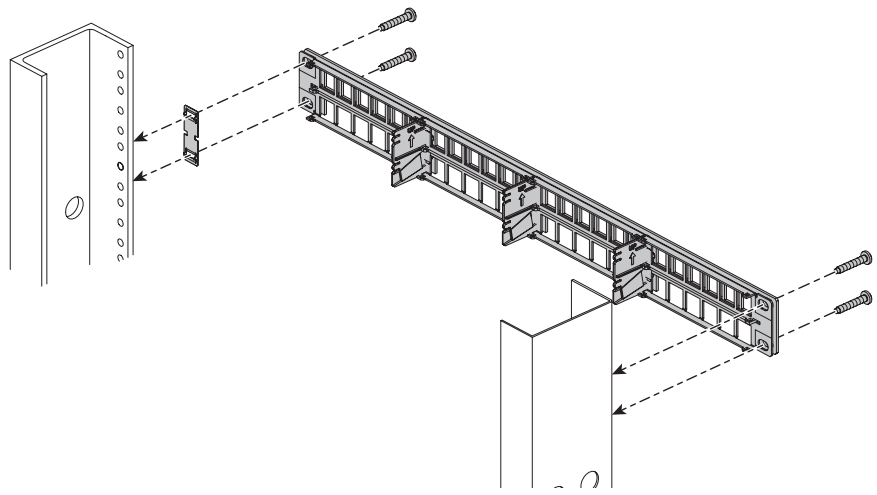

3. Mount the Extender Brackets

a. Use the hex nuts supplied with E2X1F-CMB to secure Extender Brackets behind the panel.

Note: Observe orientation of Extender Brackets to get around rack flange.

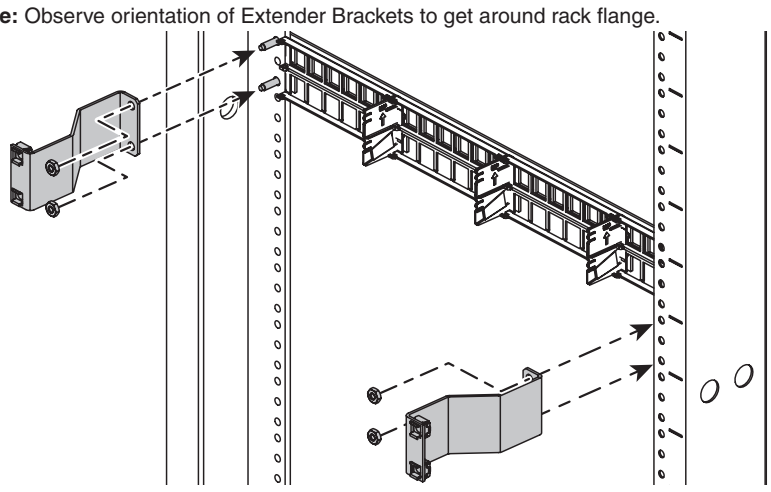

4. Bond/Ground the Panel

a. Build a unit bonding jumper (e.g., ring terminals, green grounding wire, all user-supplied).

b. Place ring terminal over grounding stud and secure with a split washer and nut from the E2XHD Panel hardware kit.

c. Place other end of unit bonding jumper into the Rack Bonding Busbar (RBB).

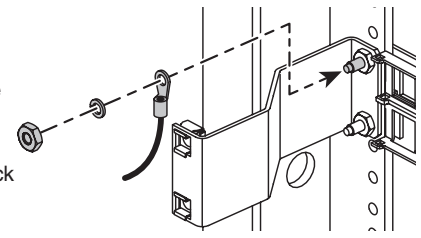

Notes:
- North-American grounding method is shown. UK grounding/earthing method differs.
- Rack Bonding Busbar is user-supplied.

5. Mount Cable Management Shelf to Extender Brackets

a. Use the short rack-mount screws from the panel hardware kit to mount the E2X1F-CMB to the cage nuts on the rear side of the Extender Brackets.

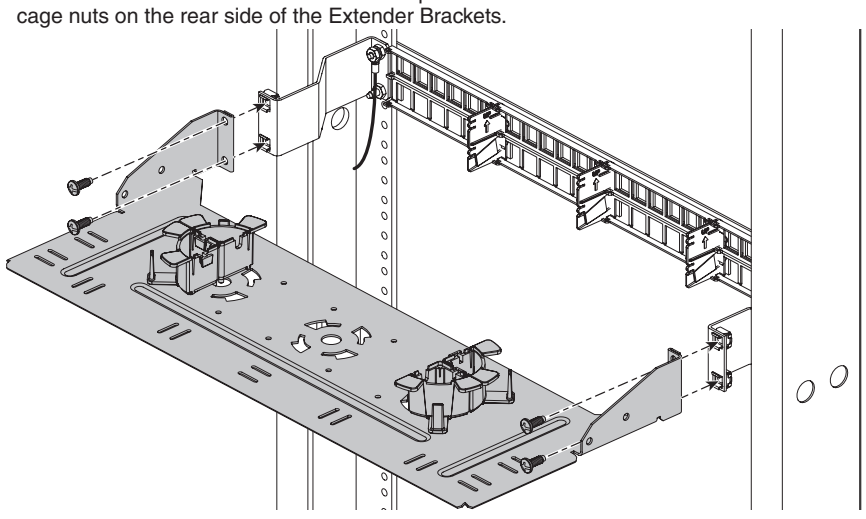

6. Cable Administration and Loading Cassettes into the Panel

a. Extender Brackets do not interfere with cassette insertion or extraction.

b. Copper cable bundles can be managed with Velcro ties through lance features in the E2X1F-CMB.

c. Fiber may be routed on the fiber administration rings (included).

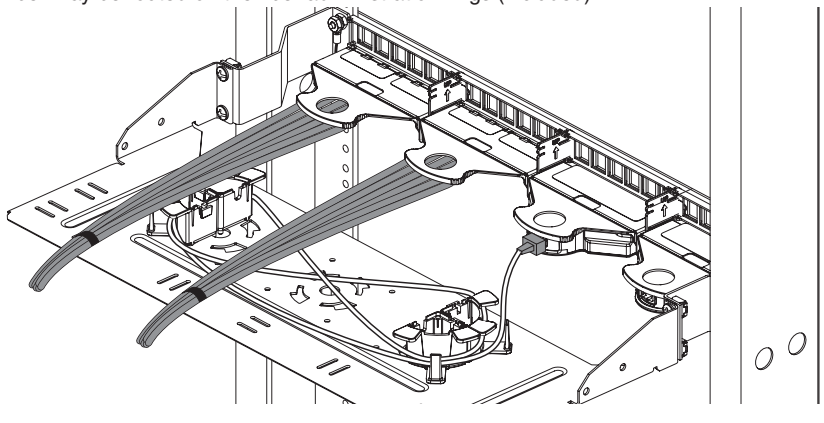

Use of the Extender Brackets with Other Rear Cable Managers

Potential Solutions with Use of Extender Brackets:

Solution: Extender Brackets provide proper setback for rear cable manager.

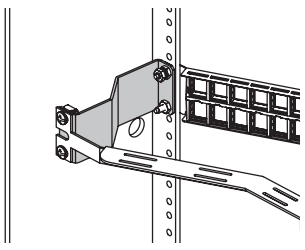

Solution: Extender Brackets avoid interfering rail profile and provide proper setback for cable manager.

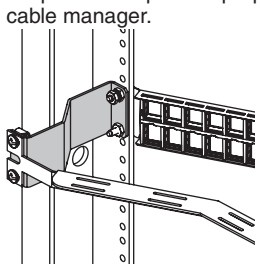

Note: 2-post racks, which have these flange-type vertical rails, may also exist.

Installation

Installation of Rear Cable Managers in cabinets or 4-post racks may be aided by use of the Extender Brackets:

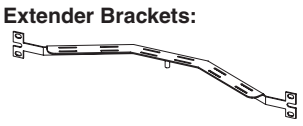

49006-AMB Angled Rear Cable Management Bar

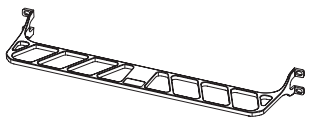

49005-DMB High-density Cable Management Bar

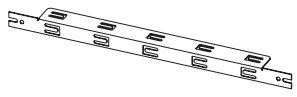

49258-TWB Tie Wrap Bar

Note: Both 1RU and 2RU Flat or angled patch panels are supported in this application.

1. Place cage nuts into all the square holes on the Extender Brackets.

Notes:
- Cage nuts are also user-supplied and should match job site installation hardware size.
- If 49258-TWB Cable Management is being installed, only one cage nut will be required on each Extender Bracket for a 1RU installation, or two cage nuts per bracket for a 2RU installation.

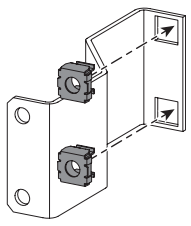

2. Mount patch panel to cabinet or rack vertical rails using the long rack-mount screws.
Note: These screws are user-supplied and should match job site hardware size (12-24, 10-32, M5, or M6 hardware are all commonly used).

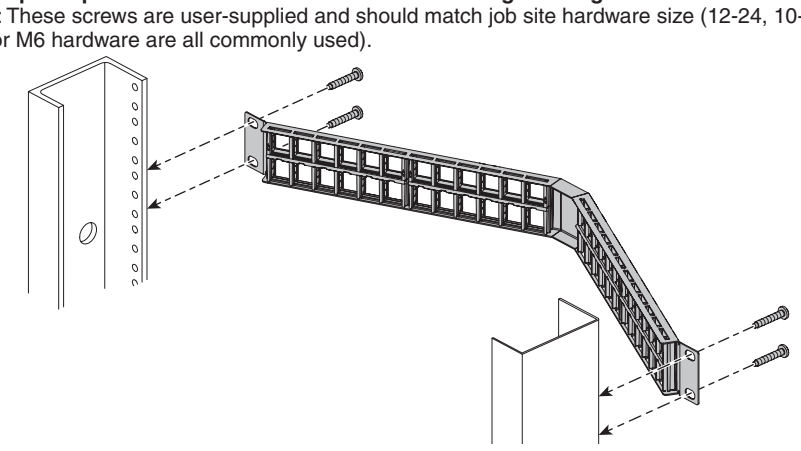

3. Place the round holes of the Extender Brackets onto the ends of the long patch panel mounting screws and secure the brackets with hex nuts (user-supplied).

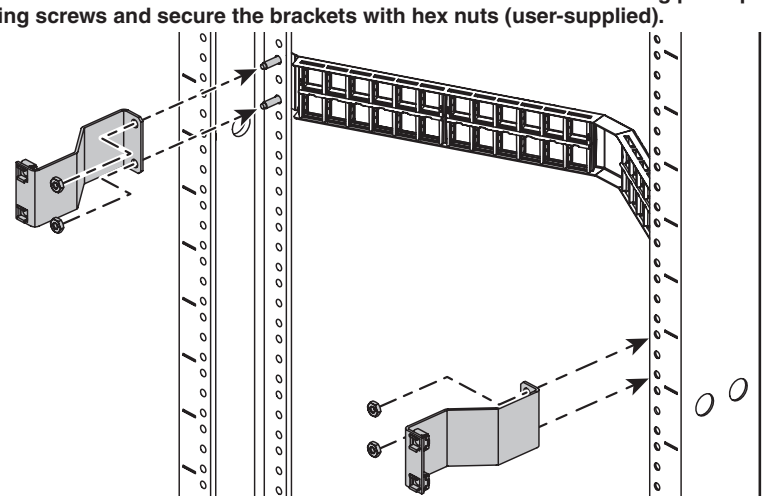

4. Insert the rack-mount screws through the Cable Management Bar(s) into the Extender Brackets.

Note: There will typically be one cable management bar used for a 1RU panel and two cable management bars used for a 2RU panel.

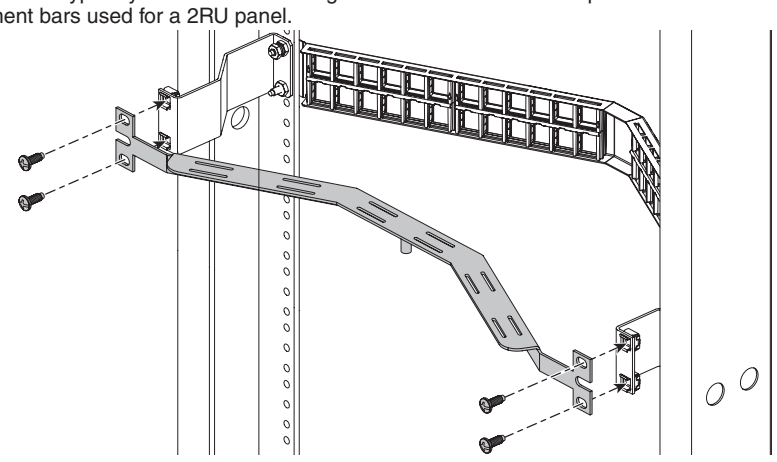

49006-AMB Angled Rear Cable Management Bar using Extender Brackets shown

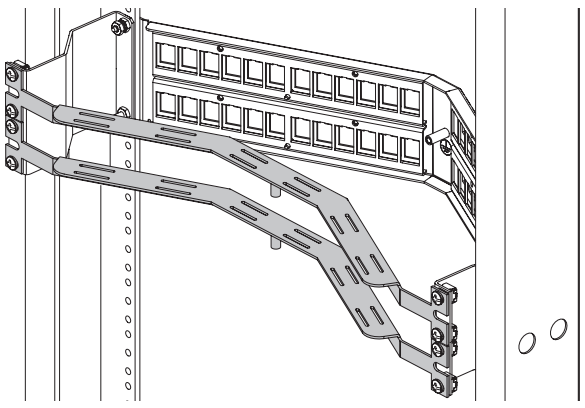

2RU Angled Panel using Extender Brackets

Use of the Extender Brackets to Recess-Mount a Flat Patch Panel

Potential Solutions With Use of Extender Brackets:

Solution: Extender Brackets provide desired setback of the patch panel.

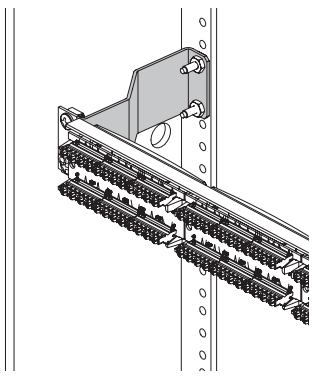

Solution: Extender Brackets avoid interfering rail profile and provide desired setback of the patch panel.

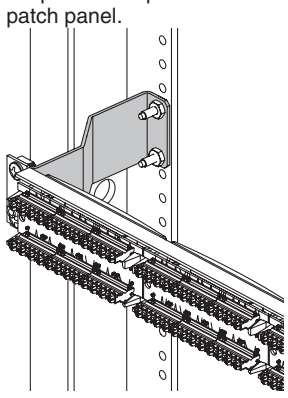

Note: 2-post racks, which have these flange-type vertical rails, may also exist.

Installation

1. Place cage nuts in the square holes on the Extender Brackets.

Notes:
- If using the 2RU size Extender Brackets, cage nuts are only needed in the top and bottom holes of each bracket for this application.
- These cage nuts are user-supplied and should match job site hardware in size (12-24, 10-32, M5, or M6 hardware are all commonly used).

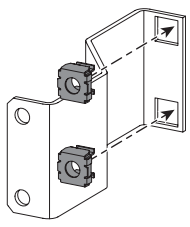

2. Mount the Extender Brackets to rack or cabinet rail using long rack-mount screws and hex nuts (screws and nuts are user- supplied).

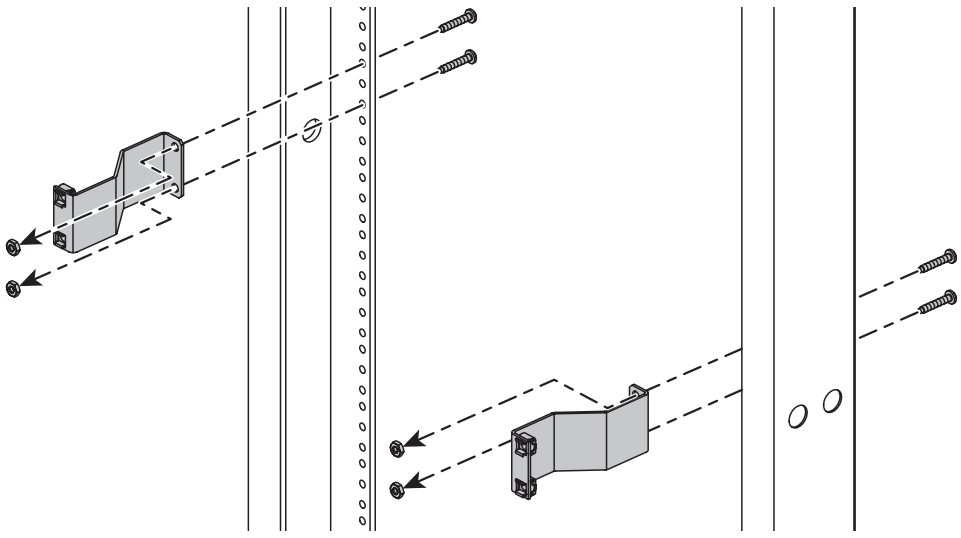

3. Mount patch panel to the cage nuts using supplied rack-mount screws, or user-supplied rack mount screws (if different size rack mount hardware is used for this installation).

Note: The Extender Brackets are NOT recommended for recessing angled patch panels, as the jacks at either end of the angled panels would not be easily accessible to users.

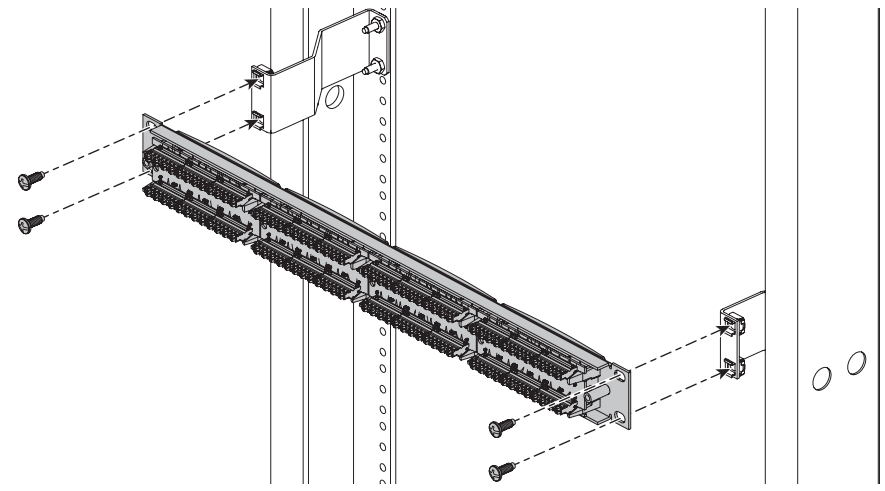

1RU Flat Panel Recessed using Extender Brackets

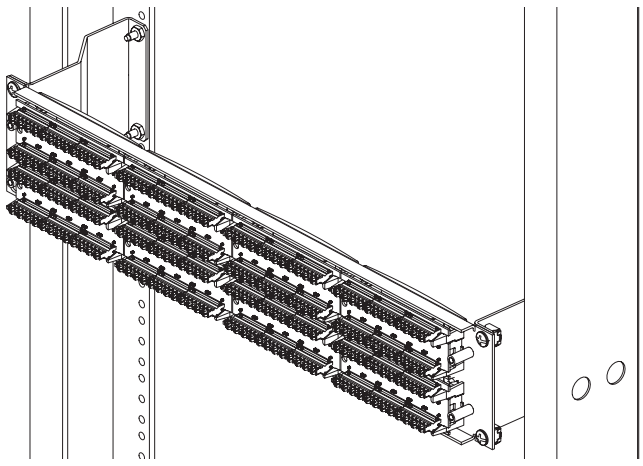

2RU Flat Panel Recessed using Extender Brackets

Patents covering this Product, if any, can be found on Leviton.com/patents.

Leviton® and Leviton® Block & Design are trademarks of Leviton Manufacturing Co., Inc. and are registered trademarks in many countries throughout the world.

FOR CANADA ONLY
For warranty information and/or product returns, residents of Canada should contact Leviton in writing at **Leviton Manufacturing of Canada ULC** to the attention of the **Quality Assurance Department, 165 Hymus Blvd, Pointe-Claire (Quebec), Canada H9R 1E9 or by telephone at 1 800 405-5320.**

LIMITED 1 YEAR WARRANTY AND EXCLUSIONS
Leviton warrants to the original consumer purchaser and not for the benefit of anyone else that this product at the time of its sale by Leviton is free of defects in materials and workmanship under normal and proper use for one year from the purchase date. Leviton's only obligation is to correct such defects by repair or replacement, at its option. **For details visit www.leviton.com or call 1-800-824-3005.** This warranty excludes and there is disclaimed liability for labor for removal of this product or reinstallation. This warranty is void if this product is installed improperly or in an improper environment, overloaded, misused, opened, abused, or altered in any manner, or is not used under normal operating conditions or not in accordance with any labels or instructions. **There are no other or implied warranties of any kind, including merchantability and fitness for a particular purpose**, but if any implied warranty is required by the applicable jurisdiction, the duration of any such implied warranty, including merchantability and fitness for a particular purpose, is limited to one year. **Leviton is not liable for incidental, indirect, special, or consequential damages, including without limitation, damage to, or loss of use of, any equipment, lost sales or profits or delay or failure to perform this warranty obligation**. The remedies provided herein are the exclusive remedies under this warranty, whether based on contract, tort or otherwise.

For Technical Assistance Call: 1-800-824-3005 (USA Only) or 1-800-405-5320 (Canada Only) www.leviton.com

© 2021 Leviton Mfg. Co., Inc.