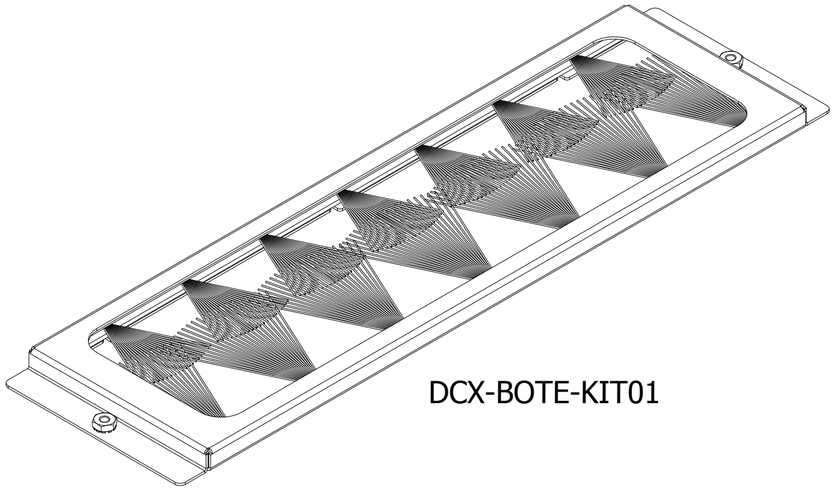

DCX-BOTE-KIT01

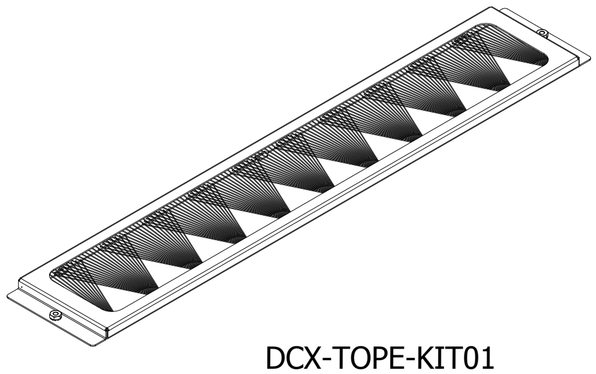

DCX-TOPE-KIT01

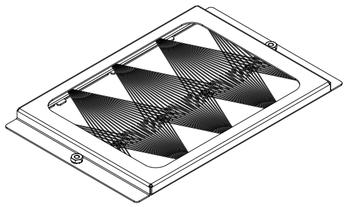

DCX-TOPE-KIT02

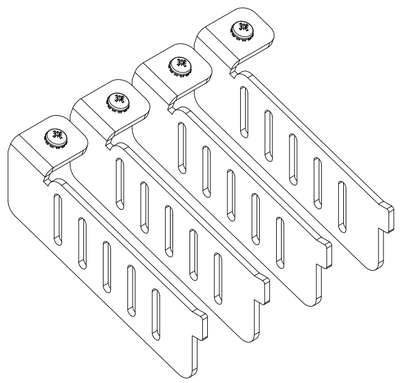

DCX-BOTE-KIT02

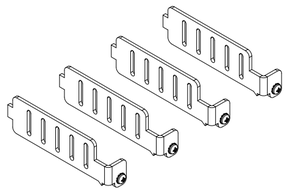

DCX-TOPE-KIT03

**DCX-BOTE-KITxx-yy**
xx - 01 - BRUSH
xx - 02 - (4) BRACKETS
yy - B - BLACK
yy - W - CENTRAL OFFICE WHITE

STANDARD BOTTOM PANELS

**DCX-TOPE-KITxx-yy**
xx - 01 - LARGE BRUSH FRAME
xx - 02 - SMALL BRUSH FRAME
xx - 03 - 4 BRACKETS
yy - B - BLACK
yy - W - CENTRAL OFFICE WHITE

STANDARD TOP PANELS

| | | | |
|---|---|---|---|
| 4 | ADDED PATCH CORD BRIDGE - SH2 | RCG | 3/26/20 |
| 3 | ADDED TELESCOPIC SPOOL | RCG | 3/12/20 |
| | MODIFIED DCX-CABV-KIT01B DESCRIPTION - SH3 | | |
| 2 | UPDATED DWG VIEWS / DESCRIPTIONS - SH2 | RCG | 3/11/20 |
| 1 | ADDED SHEET 4 | RCG | 2/2/20 |

BELDEN

THIS DRAWING AND ALL INFORMATION CONTAINED HEREIN IS THE PROPERTY OF BELDEN. ANY USE, COPY OR REPRODUCTION OF THIS MATERIAL WITHOUT WRITTEN PERMISSION OF BELDEN IS PROHIBITED

DCXS SERIES MASTER - ACCESSORIES

DCXS SERIES - TOP & BOTTOM PANEL DETAILS

DRAWN BY: RCG
DRAWN DATE: 9/13/19
UNITS : INCH
SH 1 of 4
C
SCALE: 3:32
DATE: 9/13/2019

**SUBMITTAL**

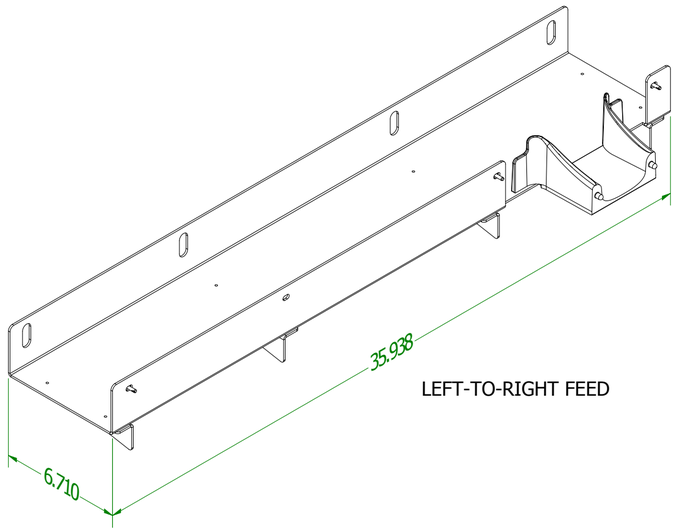


LEFT-TO-RIGHT FEED

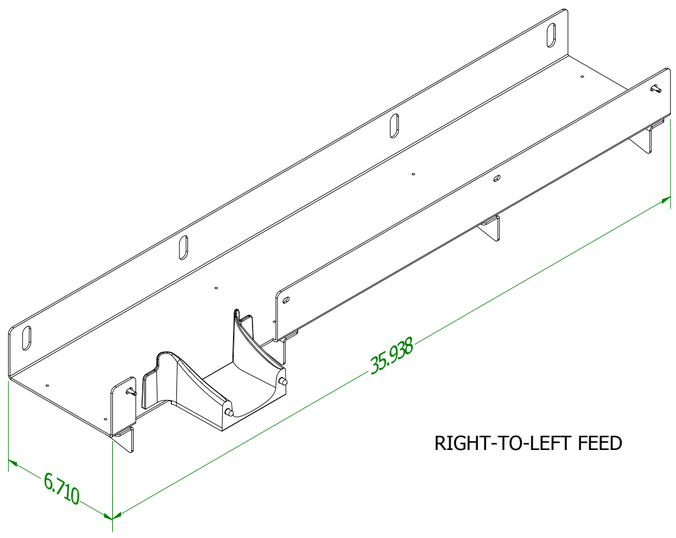


RIGHT-TO-LEFT FEED

**DCX-HRRC-xxyy**
HORZ REAR CHANNEL KIT (SET OF 4)

xx - LR01 - LEFT-TO-RIGHT FEED
xx - RL01 - RIGHT-TO-LEFT FEED

yy - B - BLACK
yy - W - CENTRAL OFFICE WHITE

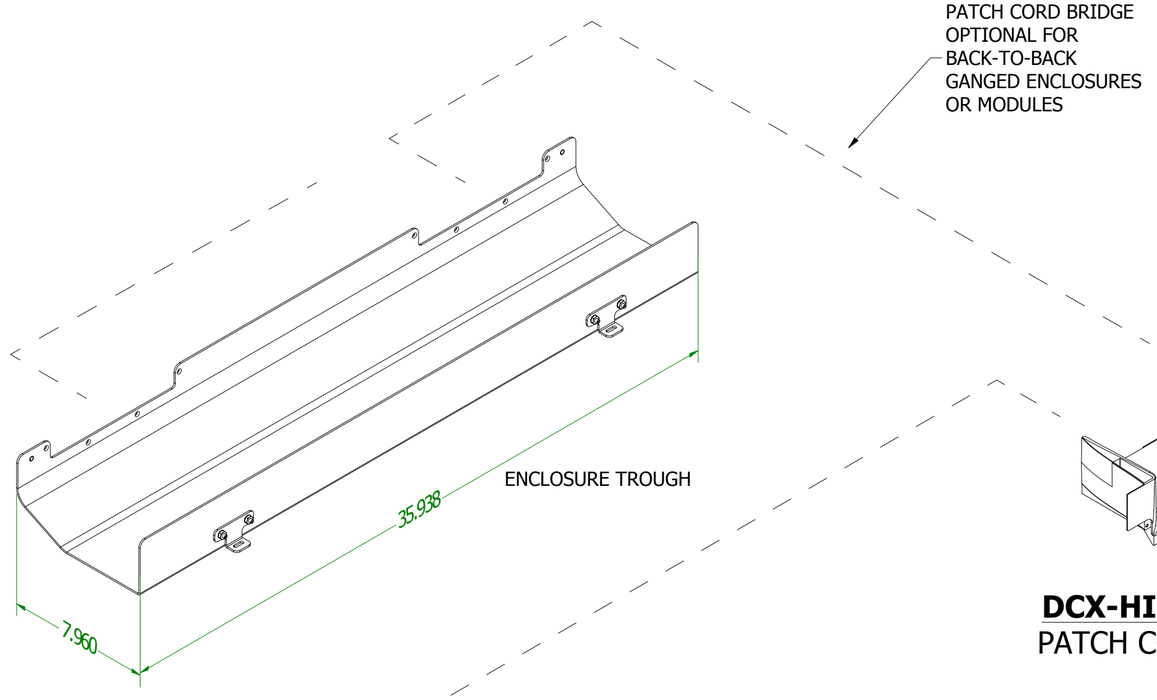


ENCLOSURE TROUGH

**DCX-HINB-KIT01B**
PATCH CORD BRIDGE

BLACK

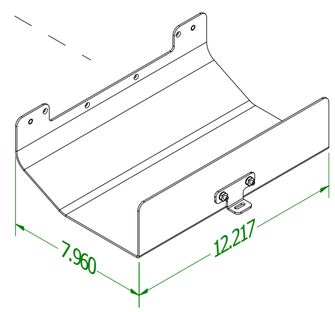


MODULE TROUGH

**DCX-HINC-KITxxyy**
BOTTOM TROUGH

xx - 01 - DCX ENCLOSURE TROUGH
xx - 02 - PATCH CORD SLACK STORAGE MODULE TROUGH

yy - B - BLACK
yy - W - CENTRAL OFFICE WHITE

| | | | |
|---|---|---|---|
| 4 | ADDED PATCH CORD BRIDGE - SH2 | RCG | 3/26/20 |
| 3 | ADDED TELESCOPIC SPOOL | RCG | 3/12/20 |
| | MODIFIED DCX-CABV-KIT01B DESCRIPTION - SH3 | | |
| 2 | UPDATED DWG VIEWS / DESCRIPTIONS - SH2 | RCG | 3/11/20 |
| 1 | ADDED SHEET 4 | RCG | 2/2/20 |

THIS DRAWING AND ALL INFORMATION CONTAINED HEREIN IS THE PROPERTY OF BELDEN. ANY USE, COPY OR REPRODUCTION OF THIS MATERIAL WITHOUT WRITTEN PERMISSION OF BELDEN IS PROHIBITED

DCXS SERIES MASTER - ACCESSORIES

DCXS SERIES - BOTTOM & REAR TROUGHS

DRAWN BY: RCG
DRAWN DATE: 9/13/19
UNITS : INCH | SH 2 of 4 | C
SCALE: 3:32 | DATE: 9/13/2019

**SUBMITTAL**

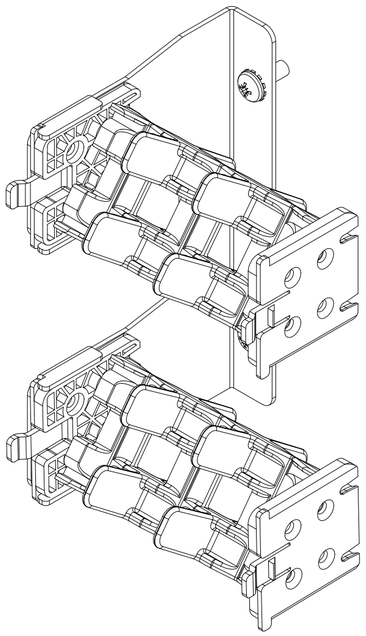

**DCX-CABV-KIT01B**
CABLE DISTRIBUTION
ATTACHMENT KIT

B - BLACK

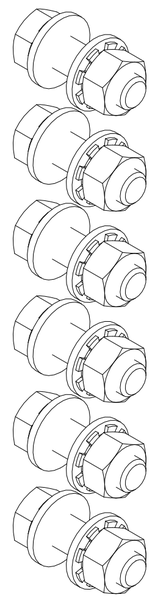

**DCX-GANG-KIT01**
SIDE-TO-SIDE
OR
BACK-TO-BACK

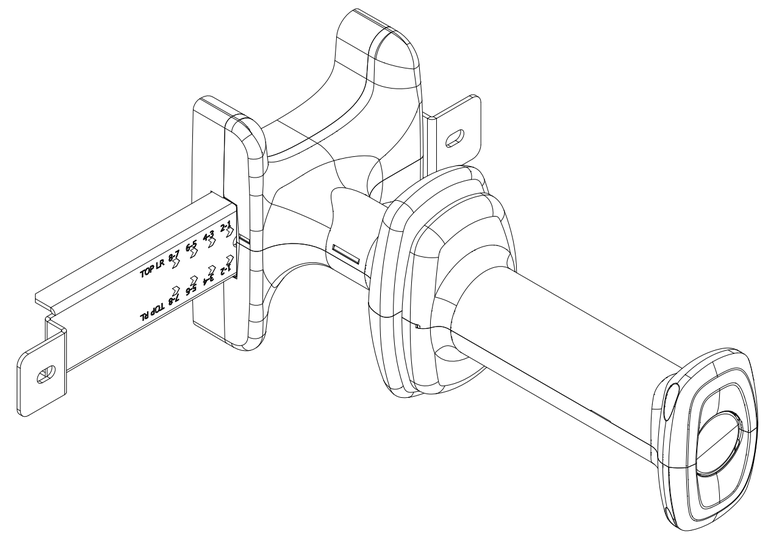


**DCX-SPOO-KIT02B***
TELESCOPIC SPOOL KIT
B - BLACK

(SOLD INDIVIDUALLY)

*DCX ENCLOSURE ONLY

| | | | |
|---|---|---|---|
| 4 | ADDED PATCH CORD BRIDGE - SH2 | RCG | 3/26/20 |
| 3 | ADDED TELESCOPIC SPOOL | RCG | 3/12/20 |
| | MODIFIED DCX-CABV-KIT01B DESCRIPTION - SH3 | | |
| 2 | UPDATED DWG VIEWS / DESCRIPTIONS - SH2 | RCG | 3/11/20 |
| 1 | ADDED SHEET 4 | RCG | 2/2/20 |

BELDEN

THIS DRAWING AND ALL INFORMATION CONTAINED HEREIN IS THE PROPERTY OF BELDEN. ANY USE, COPY OR REPRODUCTION OF THIS MATERIAL WITHOUT WRITTEN PERMISSION OF BELDEN IS PROHIBITED

DCXS SERIES MASTER - ACCESSORIES

CABLE ATTACHMENT / SPOOLS / ACCESSORIES

DRAWN BY: RCG
DRAWN DATE: 9/13/19
UNITS : INCH | SH 3 of 4 | C
SCALE: 3:32 | DATE: 9/13/2019

**SUBMITTAL**

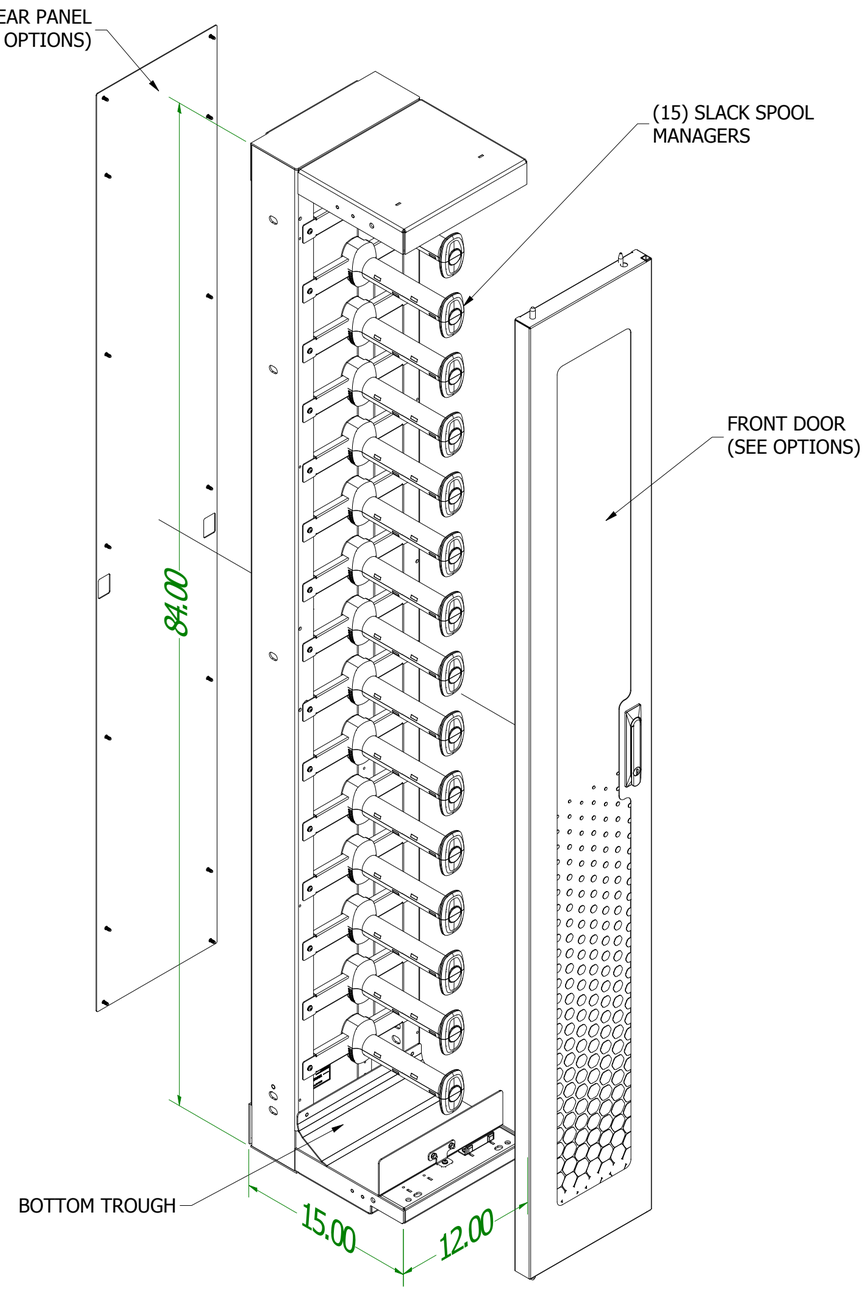


**DCX-PCST-MODxyz**

PATCH CORD SLACK STORAGE MODULE

X = 0 - NO BACK PANEL
X = 1 - BACK PANEL

Y = 1 - PLEXIGLASS DOOR
Y = 2 - 78% PERFORATED DOOR
Y = 3 - SOLID DOOR

Z = B - BLACK
Z = W - CENTRAL OFFICE WHITE

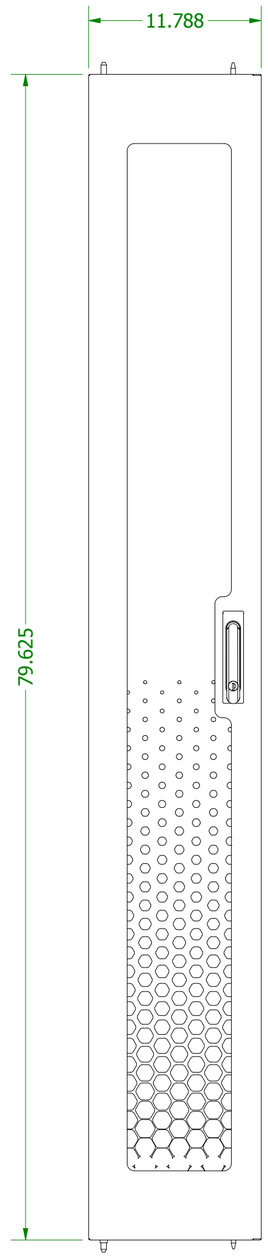


PLEXIGLASS DOOR
SCALE 1:8

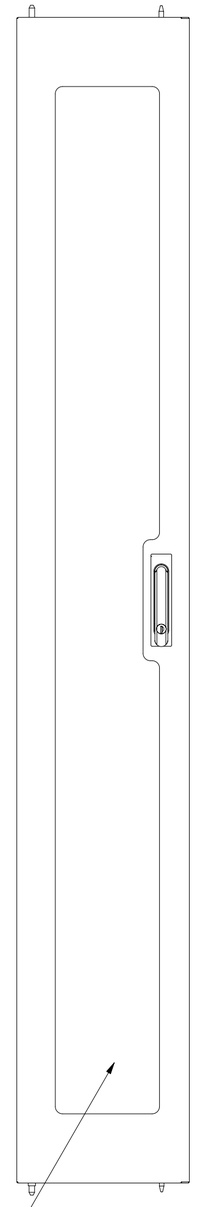

PERF DOOR
SCALE 1:8

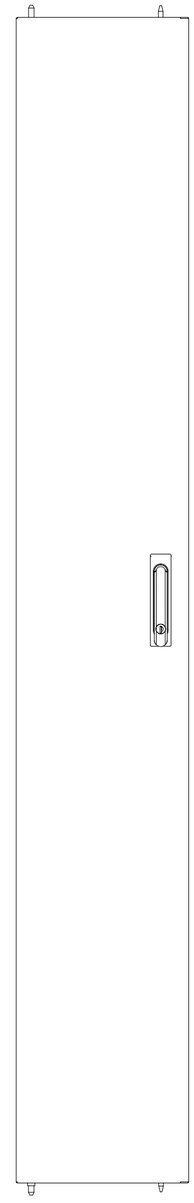

SOLID DOOR
SCALE 1:8

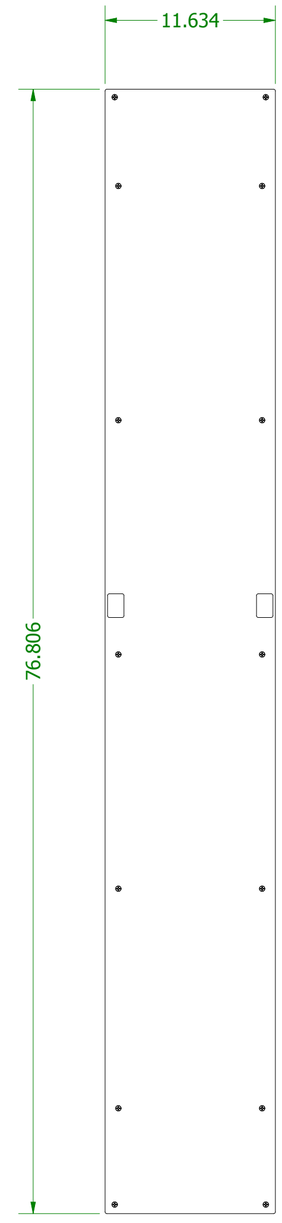


REAR PANEL
SCALE 1:8

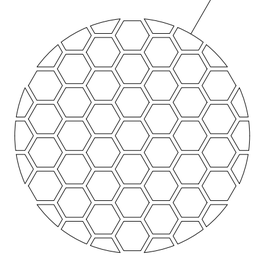

78% PERF PATTERN
SCALE 1:1

| | | | |
|---|---|---|---|
| 4 | ADDED PATCH CORD BRIDGE - SH2 | RCG | 3/26/20 |
| 3 | ADDED TELESCOPIC SPOOL | RCG | 3/12/20 |
| | MODIFIED DCX-CABV-KIT01B DESCRIPTION - SH3 | | |
| 2 | UPDATED DWG VIEWS / DESCRIPTIONS - SH2 | RCG | 3/11/20 |
| 1 | ADDED SHEET 4 | RCG | 2/2/20 |

BELDEN

THIS DRAWING AND ALL INFORMATION CONTAINED HEREIN IS THE PROPERTY OF BELDEN. ANY USE, COPY OR REPRODUCTION OF THIS MATERIAL WITHOUT WRITTEN PERMISSION OF BELDEN IS PROHIBITED

DCXS SERIES MASTER - ACCESSORIES

PATCH CORD SLACK STORAGE MODULE

DRAWN BY: RCG
DRAWN DATE: 3/2/20
UNITS : INCH | SH 4 of 4 | C
SCALE: 3:32 | DATE: 3/2/2020

**SUBMITTAL**