Models beginning with MO, MK, 7B, 6S, 6F or 5B

The Mini Meter™

Product Description

Technical Specifications

Installation Instructions

February 28th , 2013

1. Product Description 2
1.1 General Description…….....2
1.2 Meter Features.....2
1.3 Meter Certifications 3
1.4 Physical Description 3
1.4.1 Single Meter.....3
1.4.2 Enclosures.....4
2. Technical Specifications 5
2.1 Electrical Specifications….....6
2.3 Input/Output Connections.....6
Display Specifications.....7
General Display Information 7
3. Installation Instructions.....8
3.1 Explanation of Warning Symbols 8
3.2 Safety Precautions.....8
3.3 Preparation 9
3.4 List of Materials..... .9
3.5 Mounting the Enclosure 9
3.5.1 Mounting Location 9
3.5.2 Drilling Conduit Holes..... 10
3.5.3 Mounting Procedure and Conduit Installation.....10
3.6 Installation of Voltage Lines..... 11
3.7 Variations and Installation of Current Transformers ..... .11
General Requirements..... 12
3.8 Testing the Installation.....14
4. Maintenance..... 15
5. Troubleshooting/FAQ.....15
6. Contact Information.....16

List of Figures

Figure 1: Single Mini Meter and Epoxy Encapsulated Module..... 3
Figure 2: Small Enclosure Outline and Mounting Dimensions..... 4
Figure 3: Mini Meter Connections and Display..... 6
Figure 4: Mounting the Enclosure ……..... 10

List of Tables

Table 1: Electrical and Environmental Specifications..... 5
Table 2: I/O connections.....7
Table 3: LED Display Indicators.....7

1. Product Description

1.1 General Description

The Leviton Mini Meter™ is a self-powered, current transformer (CT) rated electronic kilowatthour (kWh) meter designed for permanent connection to an electrical service. Mini Meters come in single element (2-wire) and dual element (3-wire) configurations.

1.2 Meter Features

- Revenue-grade accuracy with solid-core or easy to install split core CTs
- Built in LCD that display or external mechanical counter
- Encapsulated model for harsh environments (Model Number prefixes 5B)
- Multiple load monitoring with a single meter
- AMR compatible isolated pulse outputs
- Reverse-phase LED indicator
- 5-year warranty

1.3 Meter Certifications

- UL Recognized Component for us in US or Canada
- Conforms to accuracy requirements set forth in ANSI C12.10
- Certified to California Division of Measurement Standards
- Approved by the California Energy Commission for use in California Solar

1.4 Physical Description

1.4.1 Single Meter

Figure 1 below shows the dimensions of a single Mini Meter or Epoxy Encapsulated case and cover.

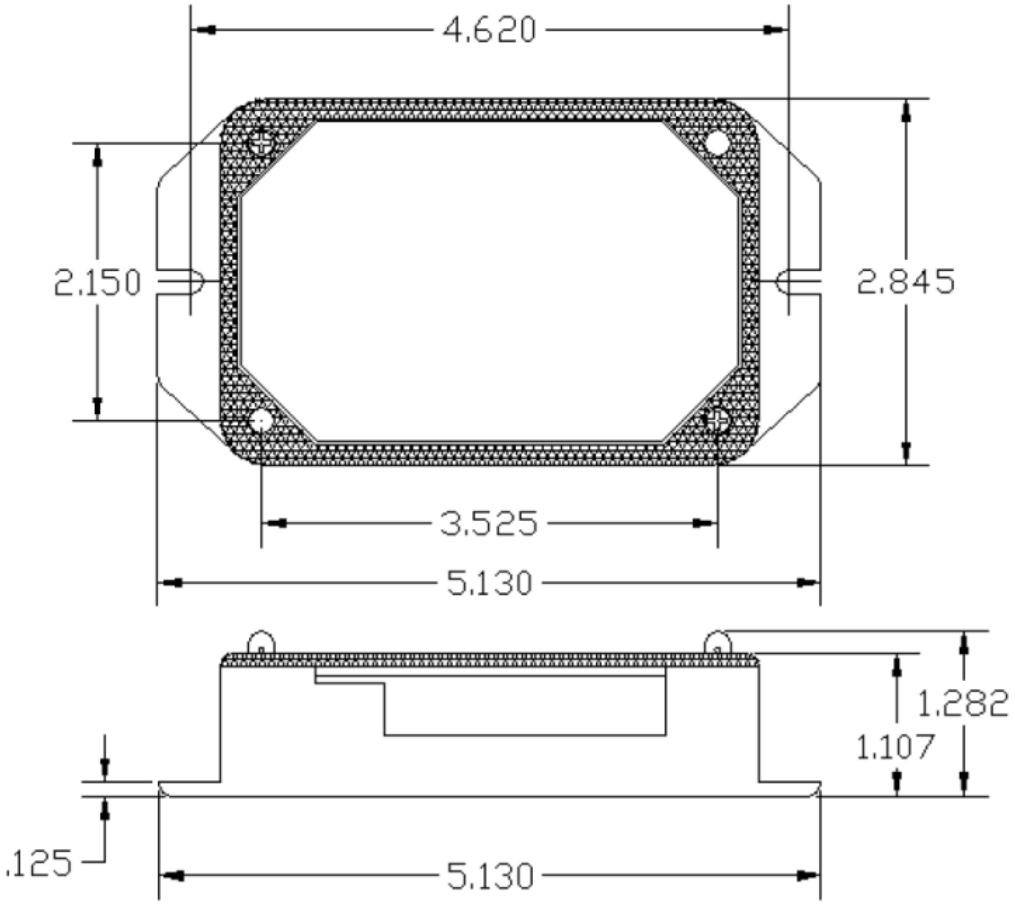

Figure 1: Single Mini Meter/EE Module case dimensions

1.4.2 Enclosures

Mini Meter and Epoxy Encapsulated module enclosures mounting drawings are shown below in figure 2.

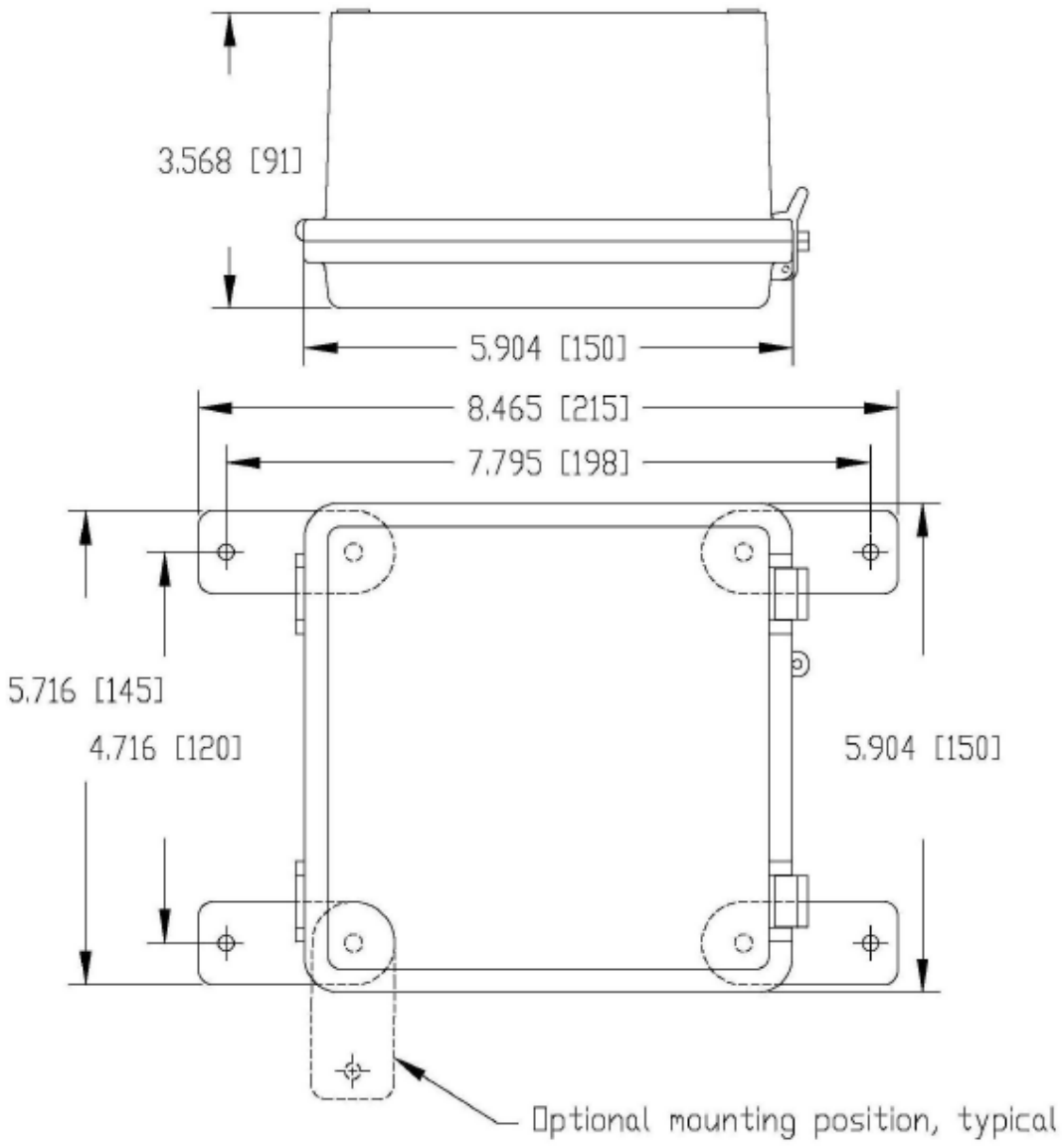

Figure 2: Small enclosure outline and mounting dimensions

2. Technical Specifications

2.1 Electrical Specifications

Mini Meters and Epoxy Encapsulated Modules fall under UL Circuit Category III: a device for measurements performed in the building installation. The electrical specifications for Mini Meters are given in the table below.

Input Configurations	1 Phase, 2 wire 1 or 2 Phase, 3 wire
Supply Voltage Range (L1 or L2 to Neutral)	Min. 102 VAC Max. 138 VAC
Maximum Input Power, L1 and L2	8 VA
Maximum Rated Current[1]	440 A primary for 400 A models 220 A primary for 200 A models 110 A primary for 100 A models 0.11 A secondary for 0.1 A secondary models 0.22 A secondary for 0.2 A secondary models
Line Frequency	50-60 Hz
Power Factor Range	0.5 to 1.0, leading or lagging
Accuracy	+/- 0.5% of registration @ 1.0pf. 2 to 200 A +/- 0.75% of registration @ 0.5pf, 2 to 200 A
Operating Temperature Range	-30 to +60 degrees C
Rated Pollution Degree[2]	2
Rated Relative Humidity	80%
Terminal Blocks: Dinkle/International Connector EK508-11P or equiv.	4.4 in-lb of torque maximum

Table 1: Electrical and environmental specifications

[1]Product approved for use with included Leviton Current Transformers, as follows:

- 400A
- 200A
- 100A

[2]Pollution Degree 2: Normally only non-conductive pollution occurs. Occasionally, however, a temporary conductivity caused by condensation must be expected.

2.2 Input/Output Connections and User Display

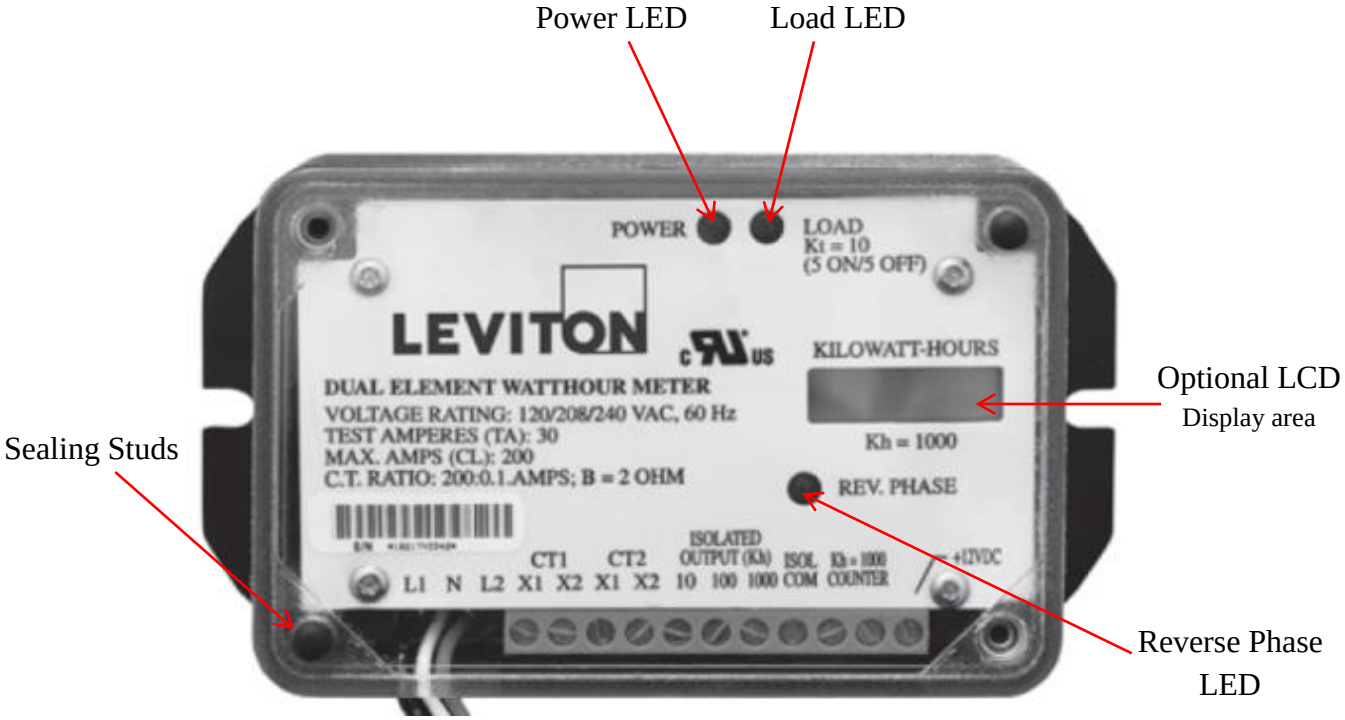

Figure 3: Mini Meter connections and display

Voltage Inputs (wire connections)	**Description**
L1	Black wire, voltage input, Line 1, 120V with respect to neutral
N	White wire, Neutral input
L2	Red wire, voltage input, Line 2, 120V with respect to neutral (7B and 5B models only)

CT Inputs	
CT1 : X1	Current Transformer input, CT1. Colored wire of CT 1
CT1 : X2	Current Transformer input, CT1. White wire of CT1
CT2 : X1	Current Transformer input, CT2.Colored wire of CT2 (7B and 5B models only)
CT2 : X2	Current Transformer input, CT2. White wire of CT2 (7B and 5B models only)

Outputs

10, Isolated Output (10 Wh/P, Kh = 10)	Isolated pulse output: 5 watthours on, 5 watthours off, referenced to ISOL COM **NOT TO BE USED FOR FIELD WIRING**
100, Isolated Output (100 Wh/P, Kh=100)	Isolated pulse output: 50 watthours on, 50 watthours off, referenced to ISOL COM
1000, Isolated Output (1 kWh/P, Kh=1000)	Isolated pulse output: 500 watthours on, 500 watthours off, referenced to ISOL COM (not available on models with T suffix)
ISOL COM	Isolated common for 10/100/1000 isolated outputs
Counter (kh = 100 or kh = 1000)*	For 12 VDC electro-mechanical counter
Counter (kh = 100 or kh = 1000)*	For 12 VDC electro-mechanical counter
+12 VDC (MMS and MMD models only)	12 VDC output; current rating is 3 mA max.

Table 2: I/O connections

*Recommend Leviton mechanical counter (1 kWh models), (0.1 kWh models), or equivalents

LED Indicators	Description
Power LED (green)	Illuminates when the meter is supplied with proper voltage
Load LED (green)	50% duty cycle (at constant load) LED to verify proper meter function when connected to a load. At 200 watts, LED will illuminate for 1.5 minutes, then turn off for 1.5 minutes; with no load, LED will remain on or off
Reverse Phase LED (red)	Illuminates when a problem with meter phasing exists. With no load, LED may be on or off. See CT installation section for instructions.
LCD Display	Optional LCD display that shows total kWh

Table 3: Display indicators

3. Installation Instructions

The following section contains installation and wiring instructions for the Leviton Mini Meter™. If technical assistance is required at any point during the installation, contact information can be found at the end of this manual. Leviton is not responsible for damage to the meter caused by incorrect wiring.

3.1. Explanation of Warning Symbols

Indicates the need to consult the operation manual due to the presence of a potential risk.

Indicates the presence of electric shock hazards. Prior to proceeding, de-energize the circuit and consult the operation manual.

Indicates that the equipment is protected throughout by double insulation.

3.2 Safety Precautions

WARNING

- **Installation of electric meters requires working with possibly hazardous voltages. These instructions are meant to be a supplement to aid trained, qualified professionals.**
- **Turn off all power supplying the equipment before performing any wiring operations. Use a properly rated voltage sensing device to confirm power is off.**
- **Bonding is not automatic for metal conduit connections; separate bonding is to be provided.**
- **Installations should be done in accordance with local codes and current National Electric Code requirements.**
- **Equipment used in a manner not specified by this document impairs the protection provided by the equipment.**

Failure to follow these warnings could result in serious injury or death.

3.3 Preparation

1. Verify the model number and electrical specifications of the device being installed to confirm they are appropriate for the intended electrical service (see Section 2).

2. Consult local codes for any possible permits or inspections required before beginning electrical work.

3. Ensure the conduit for the installation is flexible and non-metallic. For outdoor applications conduit and conduit fittings must be rated for UL Type 4x outdoor enclosures. Failure to use the appropriate conduit impairs the degree of equipment protection.

4. Make sure all tools to be used during installation have proper insulation ratings.

5. Look at the Meter and inside the electrical panel for possible exposed wire, broken wire, damaged components or loose connections.

3.4 List of Materials

- Mini Meter or Epoxy Encapsulated Module small enclosure and associated mounting material.
- Line 1, Line 2, and Neutral hook-up wires as needed for the electrical service.
- Wires must be 18 AWG or larger and insulated for 300 VAC min.
- Current Transformers (CTs): This product is designed for use with Leviton CTs
- Flexible, non-metallic conduit and fittings; UL Type 4X for outdoor applications.

3.5 Mounting the Enclosure

3.5.1 Selecting a Mounting Location

- Meter installations require a switch or circuit breaker as part of the building installation.
- The switch or circuit breaker must be marked as the disconnecting device for the meter.
- It is recommended that the enclosure be mounted near the disconnecting device in an area with adequate ventilation.
- The enclosure should not be positioned in a manner that makes it difficult to operate the disconnecting device.
- Ensure that the CT and voltage lead lengths (and conduit lengths) are capable of reaching the enclosure from the load center.
- If a suitable mounting location near the load center cannot be found, additional in-line fuses or circuit breaker may be required in accordance with NEC regulations.

3.5.2 Drilling Conduit Holes

The bottom panel and lower half of the side panels work best for conduit opening locations in outdoor single meter enclosures. Select the location the makes wire installation easiest for the given environment. If the side panels are used, holes should be centered approximately half an inch from the bottom of the enclosure. Hole sizes must be appropriate to fittings, and large enough to fit all voltage and CT wiring (4-7 18 AWG min. wires insulated for 300 V min.). Care should be exercised to keep drill bit away from components inside the enclosure. **Type 4X conduit and fittings must be used in order to maintain the outdoor rating of the enclosure.**

3.5.3 Mounting Procedure and Conduit Installation

1. Attach the mounting brackets to the back of the enclosure with the four provided screws..

2. Fasten the enclosure to the selected surface via mounting holes.

3. Verify that the enclosure is not loose and that all connections are secure.

4. Attach the conduit between enclosure and load center, routing wires as necessary for later use.

5. Make sure the conduit fittings are aligned properly and tightened securely to prevent moisture from entering the enclosure (outdoor applications).

Figure 4: Mounting the Enclosure

3.6 Installation of Voltage Lines

Check to make sure service is disconnected before any connections are made.

Voltage connections must be made in accordance with NEC Section 240 and all other local electrical code requirements.

1. Field wired voltage connections are made to the Mini Meter terminal block. The rated torque for these terminal blocks is 4.4 in-lb, and can be used with solid and stranded copper wires, at 12-18 AWG.

2. Verify that branch circuit fuse specifications meet local electric codes.

3. Connect 18 AWG min., 300 V min. insulated wiring for Line voltages and Neutral to the appropriate locations in the breaker panel, in accordance with all national and local electrical codes; see Figure 9 for wiring diagram.

4. Route wires through the conduit if not already done.

5. Trim the wire to the appropriate length to avoid coils of excess wiring.

6. Strip wiring to approximately .300 inches if needed and connect to the appropriate terminals. Wires should be tightened so that they are held snuggly in place, but do not to over-tighten, as this may compress and weaken the conductor.

3.7 Installation of Current Transformers

To reduce risk of electric shock, always open or disconnect the circuit from the power distribution system of a building before installing or servicing current transformers.

In accordance with NEC, CTs may not be installed in any panel board where they exceed 75% of the wiring space of any cross-sectional area.

General Requirements:

- Splices on the CT leads must be within the meter enclosure, not inside the conduit. Leviton provided CT leads are 24 inches minimum. Wire insulation should be stripped so that the bare conductor length that connects to the meter terminal block does not exceed 0.300 inches.
- CTs should be securely fastened such that they will not slide down to live terminals.
- Wires should be tightened so that they are held snuggly in place, but do not to overtighten, as this may compress and weaken the conductor.
- Current and voltage inputs must be installed 'in phase' for accurate readings (e.g. CT1 on Line 1, CT2 on Line 2)

Leviton solid core CTs

Installing solid core CTs

1. Route CT wires through the conduit if not already done.
2. Trim the wire to the appropriate length to avoid coils of excess wiring.
3. Strip wiring to approximately .300 inches and connect to the appropriate terminals as described above.
4. With power turned off, disconnect each monitored conductor and slide on a CT, ensuring the CT is correctly oriented as noted above.
5. Reconnect the conductors.

   Failure to install CTs in the correct orientation and on the correct phase will lead to inaccurate meter readings.

DUAL ELEMENT MINI METER HOOKUP DIAGRAM

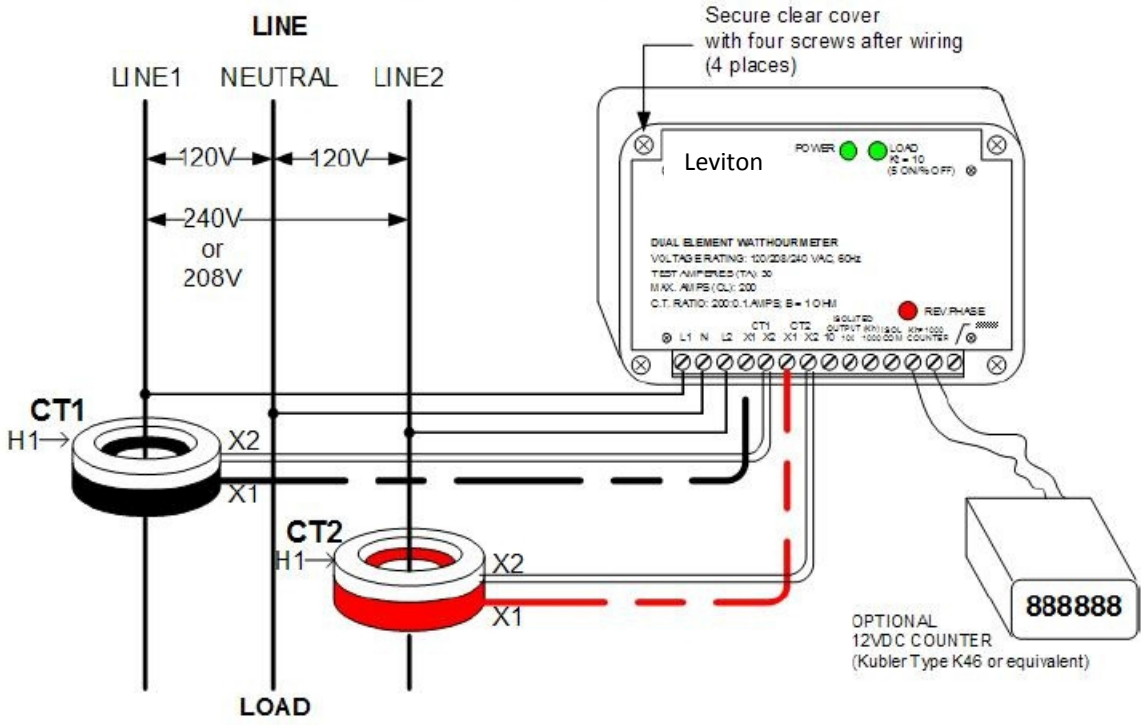

SINGLE ELEMENT MINI METER HOOKUP DIAGRAM

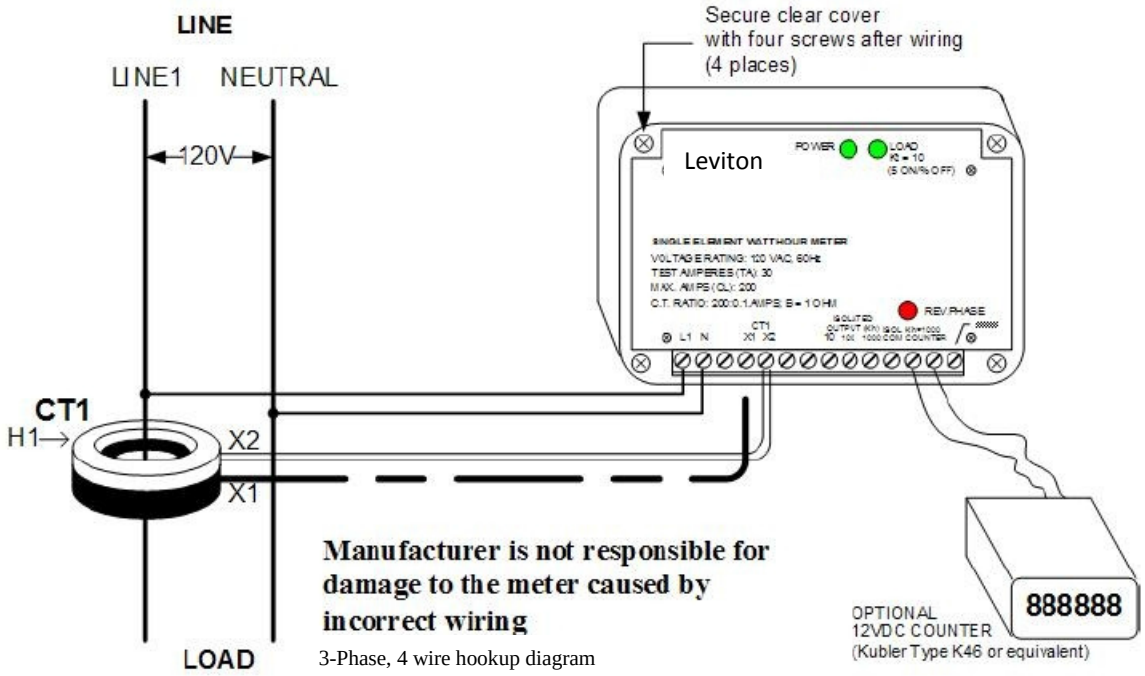

3-Phase, 4 wire hookup diagram

3.9 Testing the Installation

Testing Voltage

The power LED illuminates when the Mini Meter or Epoxy Encapsulated Module has a proper power supply. Voltage should also be tested using an AC Voltmeter to verify that the voltage across voltage line terminals (L1 to Neutral and L2 to Neutral) is not in excess of the maximum rated voltage.

CT Reverse Phase Indicator

Mini Meters and EE Modules have a red reverse phase indicator LED as described in section 2.3. **There must be a load drawing a minimum of 1 A connected to the meter in order for the reverse phase LED to function correctly**. If a proper load is connected, and the LED is illuminated, power down the voltage supply and verify that CTs are installed correctly.

Load LED

The load LEDs are described in section 2.3. These LEDs should be pulsing at 50% duty cycle when the meter is connected properly and a constant load is applied.

3.10 Securing the Enclosure

In accordance with safety requirements, enclosures must be secured using the provided key lock once installation is complete. The purpose of the lock is to prevent access to live parts that pose potential safety risks. To install the lock, slide through the provided holes on the clamp side of the enclosure and fasten securely.

4. Maintenance

Properly installed meters with sound connections and secure conduit fittings should not require user maintenance. If the meter is functioning abnormally, consult the FAQ/Troubleshooting guide. If the answer cannot be found there, contact Leviton technical support.

5. Troubleshooting/FAQ

Problem	Solution
1. Power LED not illuminated	• Check to make sure all connections are wired • Test the voltage being supplied to the meter using an AC voltmeter • With power off, remove any additional line fuses and test with ohmmeter
2. Load LED not flashing	• Verify CT connections and orientations • Make sure there is sufficient load to draw a significant current • Test the voltage being supplied to the meter using an AC voltmeter
3. Registered consumption low	• Check to make sure the reverse phase LED is not on • Even if the reverse phase light is off, double-check CT orientations. One CT installed in the incorrect direction doesn't always illuminate the reverse phase LED • Make sure that current and voltage connections are in phase • Check power connections and fuses
4. Reverse phase LED illuminated	• Verify orientation and connection of CT wires • Ensure that phasing is correct (CT1 on Line 1, CT2 on Line 2) • Verify that a load drawing more than 1 Amp is connected to the meter

6. Contact Information

Leviton Manufacturing Co., Inc. Global Headquarters
201 N. Service Rd. Melville, NY 11747-3138 • Tech Line: 1-800-824-3005 • FAX: 1-800-832-9538

Leviton Manufacturing Co., Inc. Lighting & Energy Solutions
20497 SW Teton Avenue, Tualatin, OR 97062 • Telephone: 1-800-736-6682 • FAX: 503-404-5594
Metering Tech Support: (6:00AM-4:00PM P.S.T. Monday-Friday):
meters@leviton.com 1-800-959-6004

Leviton Manufacturing of Canada, Ltd.
165 Hymus Boulevard, Pointe Claire, Quebec H9R 1E9 • Telephone: 1-800-469-7890 • FAX: 1-800-563-1853

Leviton S. de R.L. de C.V.
Lago Tana 43, Mexico DF, Mexico CP 11290 • Tel. (+52) 55-5082-1040 • www.leviton.com.mx

Visit our Website at www.leviton.com/les

© 2012 Leviton Manufacturing Co., Inc. All rights reserved. Subject to change without notice.