THIS DRAWING CONTAINS TRADE INFORMATION DEEMED TO BE CONFIDENTIAL AND PROPRIETARY PROPERTY OF MIDDLE ATLANTIC PRODUCTS, INC. AND IS TO BE USED ONLY FOR THE PURPOSES FOR WHICH IT IS SUBMITTED AND FURTHER SHALL NOT BE COPIED IN WHOLE OR PART WITHOUT WRITTEN PERMISSION FIRST OBTAINED FROM MIDDLE ATLANTIC PRODUCTS, INC.

REV	DESCRIPTION	REV BY	REV DATE	APP'D BY	DATE APP.
-	PRODUCTION RELEASE	///////	///////	JJP	10/18/04
A	SEE EC-030305-03	NC	03/03/05	JJP	03/03/05
B	SEE EC-061605-01	NC	06/16/05	JJP	06/16/05

NOTE:

1. Z-4 MOUNTING BRACKETS REQUIRED.
   MRK-Z4
   VRK-Z4
2. SEE PAGE 2 FOR ALL APPLICABLE OSHPD NOTES.

REGISTERED PROFESSIONAL ENGINEER
WILLIAM M. BRUHN
C 57867
EXP. 6/2010
CIVIL
STATE OF CALIFORNIA

APPROVED
Fixed Equipment Anchorage
Office of Statewide Health Planning and Development
OPA-2184-07
Pre-approval Program Manager: Anthony R. Pike (916) 440-8470
Reviewed By: Igor Kharitonoff Date 07/21/09

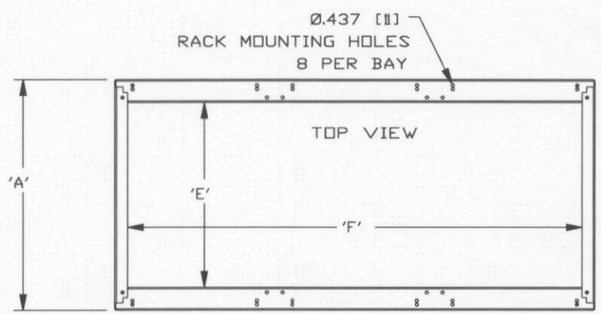

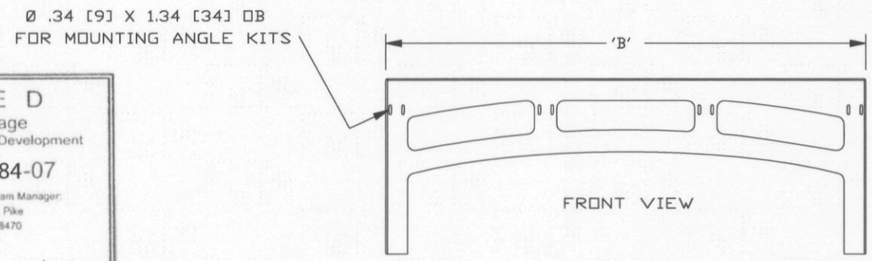

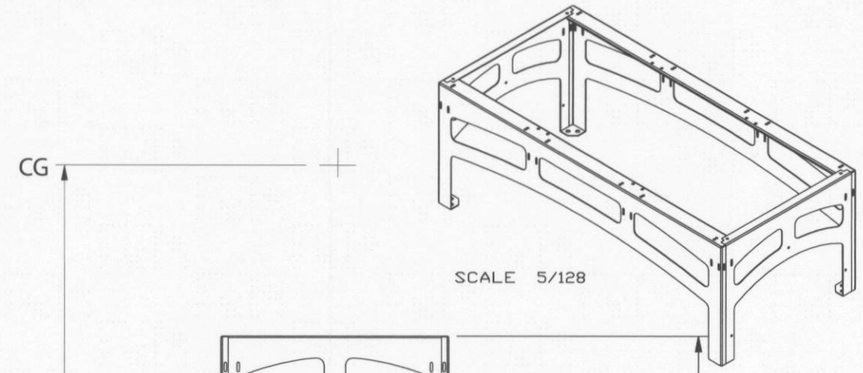

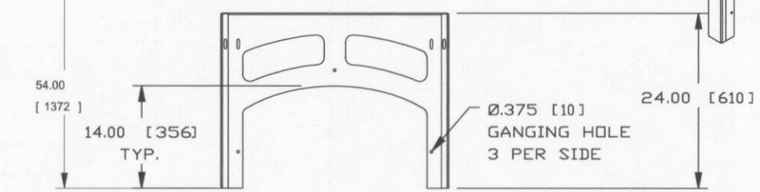

SIDE VIEW

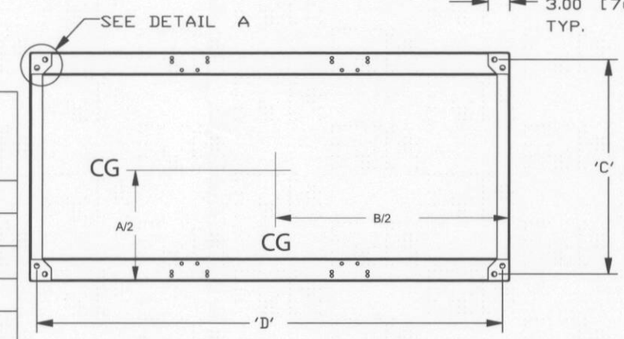

BOTTOM VIEW

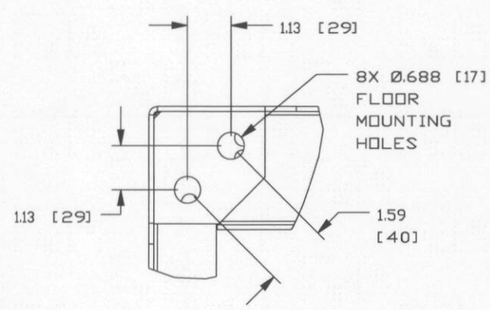

DETAIL A
MOUNTING FOOT DETAIL
SCALE 1/4

CUSTOM SIZES

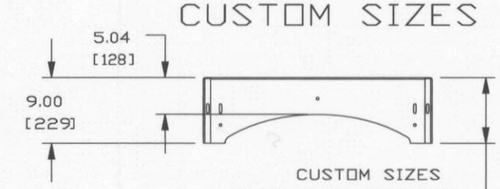

CUSTOM SIZES AVAILABLE BETWEEN 9.00 [229] MIN. AND 13.99 [355] MAX. USING FIXED GEOMETRY AS SHOWN

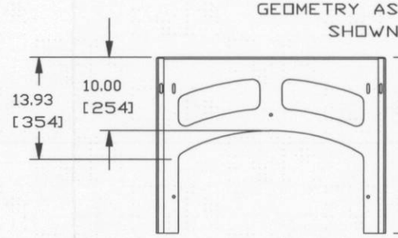

CUSTOM SIZES AVAILABLE BETWEEN 14.00 [356] MIN. AND 24.00 [610] MAX. USING FIXED GEOMETRY AS SHOWN

PART NUMBER	'A' DEPTH	'B' WIDTH	'C' DEPTH MTNG HOLE C TO C	'D' WIDTH MTNG HOLE C TO C	'E' OPENING DEPTH	'F' OPENING WIDTH
SRB-1-MRK-2424	24.00 (610)	22.00 (559)	22.00 (559)	20.00 (508)	17.70 (450)	18.5 (470)
SRB-2-MRK-2424	24.00 (610)	44.03 (1118)	22.00 (559)	42.03 (1068)	17.70 (450)	40.53 (1029)
SRB-3-MRK-2424	24.00 (610)	66.06 (1678)	22.00 (559)	64.06 (1627)	17.70 (450)	62.56 (1589)
SRB-1-MRK-3124	31.40 (798)	22.00 (559)	29.40 (747)	20.00 (508)	25.10 (638)	18.5 (470)
SRB-2-MRK-3124	31.40 (798)	44.03 (1118)	29.40 (747)	42.03 (1068)	25.10 (638)	40.53 (1029)
SRB-3-MRK-3124	31.40 (798)	66.06 (1678)	29.40 (747)	64.06 (1627)	25.10 (638)	62.56 (1589)
SRB-1-MRK-3624	36.00 (914)	22.00 (559)	34.00 (864)	20.00 (508)	29.70 (754)	18.5 (470)
SRB-2-MRK-3624	36.00 (914)	44.03 (1118)	34.00 (864)	42.03 (1068)	29.70 (754)	40.53 (1029)
SRB-3-MRK-3624	36.00 (914)	66.06 (1678)	34.00 (864)	64.06 (1627)	29.70 (754)	62.56 (1589)
SRB-1-MRK-4224	42.00 (1067)	22.00 (559)	40.00 (1016)	20.00 (508)	35.70 (907)	18.5 (470)
SRB-2-MRK-4224	42.00 (1067)	44.03 (1118)	40.00 (1016)	42.03 (1068)	35.70 (907)	40.53 (1029)
SRB-3-MRK-4224	42.00 (1067)	66.06 (1678)	40.00 (1016)	64.06 (1627)	35.70 (907)	62.56 (1589)
SRB-1-MRK-4824	48.00 (1219)	22.00 (559)	46.00 (1168)	20.00 (508)	41.70 (1059)	18.5 (470)
SRB-2-MRK-4824	48.00 (1219)	44.03 (1118)	46.00 (1168)	42.03 (1068)	41.70 (1059)	40.53 (1029)
SRB-3-MRK-4824	48.00 (1219)	66.06 (1678)	46.00 (1168)	64.06 (1627)	41.70 (1059)	62.56 (1589)
SRB-1-DRK-3624	36.00 (914)	30.00 (762)	34.00 (864)	28.00 (711)	29.70 (754)	26.50 (673)
SRB-2-DRK-3624	36.00 (914)	60.03 (1525)	34.00 (864)	58.03 (1474)	29.70 (754)	56.53 (1436)
SRB-1-DRK-4224	42.00 (1067)	30.00 (762)	40.00 (1016)	28.00 (711)	35.70 (907)	26.50 (673)
SRB-2-DRK-4224	42.00 (1067)	60.03 (1525)	40.00 (1016)	58.03 (1474)	35.70 (907)	56.53 (1436)
SRB-1-DRK-4824	48.00 (1219)	30.00 (762)	46.00 (1168)	28.00 (711)	41.70 (1059)	26.50 (673)
SRB-2-DRK-4824	48.00 (1219)	60.03 (1525)	46.00 (1168)	58.03 (1474)	41.70 (1059)	56.53 (1436)

USED ON: SRB-3-MRK-3124
NEXT ASSY: SRB-3-MRK-3124
MATERIAL: SEE COMPONENTS
FINISH: - -
- -

APPROVALS		DATE
MODELED	NC	10/06/04
DRAWN	NC	10/06/04

CIRCLED DIMENSIONS ARE CRITICAL INSPECTION DIMENSIONS
UNLESS OTHERWISE SPECIFIED, ALL DIMENSIONS ARE IN INCHES
TOLERANCES ARE:
DECIMAL: 2 PLC ±.03
3 PLC ±.010
FRACTIONS: ±1/32
ANGLES: ±1°
SCALE = 3/64
SHEET 1 OF 1

Middle Atlantic Products, Inc

TITLE: SEISMIC RISER BASE
- -

PART NO. SRB-3-MRK-3124_96-01027 PART REV -
SIZE B DXF NO. - -
DWG NO. 96-01027_SRB_SERIES_RISER_BASES_1 DWG REV B

THIS DRAWING CONTAINS TRADE INFORMATION DEEMED TO BE CONFIDENTIAL AND PROPRIETARY PROPERTY OF MIDDLE ATLANTIC PRODUCTS, INC. AND IS TO BE USED ONLY FOR THE PURPOSES FOR WHICH IT IS SUBMITTED AND FURTHER SHALL NOT BE COPIED IN WHOLE OR PART WITHOUT WRITTEN PERMISSION FIRST OBTAINED FROM MIDDLE ATLANTIC PRODUCTS, INC.

GENERAL

1. THE WORK SHOWN ON THESE DRAWINGS IS FOR THE SEISMIC ANCHORAGE OF THE SUBJECT RACK ENCLOSURES. MAXIMUM CONTENT CAPACITIES FOR VARIOUS HEIGHTS WITHIN THE BUILDING ARE PROVIDED.

2. THE WORK SHOWN HAS BEEN PRE-APPROVED BY OSHPD UNDER NUMBER OPA-2184.

3. ANCHORAGE DESIGN HAS BEEN DONE IN ACCORDANCE WITH THE 2007 EDITION OF THE CALIFORNIA BUILDING CODE, VOLUME 2A. USING THE FOLLOWING PARAMETERS:

   I_P = 1.5 (ESSENTIAL FACILITY INSTALLATIONS)
   $S_{MS} = F_A S_S$ = 2.85G (SITE CLASS D)
   $S_{DS} = 2/3 * S_{MS}$ = 1.90G
   A_P = 1.0 AND R_P =1.5 (ASCE TABLE 13.6-1)
   Z, H = VARIES

   LATERAL FORCE, $F_{P,H} = (0.4\ A_P\ S_{DS}\ I_P\ W_P) / R_P*(1 + 2\ Z/H)$
   VERTICAL FORCE, $F_{P,V} = 0.2 S_{DS}\ W_P$

INSTALLATION NOTES

1. THE MAXIMUM SEISMIC CONTENT CAPACITY OF THE RACK ENCLOSURE IS PROVIDED IN THE CAPACITY TABLE PROVIDED ON THESE DRAWINGS. THE STRUCTURAL ENGINEER-OF-RECORD (SEOR) SHALL VERIFY THAT THE WEIGHT OF RACK ENCLOSURE CONTENTS DOES NOT EXCEED THE APPROVED CAPACITY FOR THE LOCATION OF INSTALLATION.

2. THE SEOR SHALL VERIFY THAT THE EXISTING STRUCTURE IS ADEQUATE TO SUPPORT THE LOADS AND REACTIONS IMPOSED BY THE ANCHORED RACK ENCLOSURE IN ADDITION TO ALL OTHER LOADS AND FORCES.

3. RACK ENCLOSURES MAY BE ANCHORED TO EITHER A LIGHT- OR NORMAL-WEIGHT, REINFORCED CONCRETE FLOOR OR SLAB WITH A MINIMUM CONCRETE COMPRESSIVE STRENGTH (F'C) OF 3,000 PSI.

4. REINFORCED CONCRETE FLOOR SLABS SHALL HAVE A MINIMUM THICKNESS BASED ON THE ANCHOR TYPE AS NOTED BELOW:

   - HILTI HDA-P UNDERCUT ANCHORS OF 0.47" DIA - MINIMUM SLAB THICKNESS OF 7-1/2"

   - HILTI KWIK BOLT TZ EXPANSION ANCHORS OF 0.50" - MINIMUM SLAB THICKNESS OF 6"

5. DOCUMENTATION VERIFYING CONCRETE COMPOSITION, STRENGTH, AND THICKNESS SHALL BE SUBMITTED TO THE ENFORCEMENT AGENCY.

6. INSTALLATION OF THE RACK ENCLOSURES IS LIMITED TO INTERIOR OR ENVIRONMENTALLY PROTECTED LOCATIONS.

RACK ENCLOSURE CAPACITY TABLES

MAXIMUM CONTENT CAPACITY (POUNDS) (1),(2),(3)
HILTI HDA-P ANCHORS IN NORMAL-WEIGHT CONCRETE

RACK ENCLOSURE	RISER EMPTY WEIGHT	LOCATION IN BUILDING (Z/H) GROUND	1/3	2/3	ROOF
SRB-1-MRK-24XX	30	1000	1000	1000	1000
SRB-2-MRK-24XX	36	1500	1500	1500	1500
SRB-3-MRK-24XX	50	2250	2250	2250	1900
SRB-1-MRK-31XX	33	1000	1000	1000	1000
SRB-2-MRK-31XX	45	1500	1500	1500	1500
SRB-3-MRK-31XX	50	2250	2250	2250	2250
SRB-1-MRK-36XX	45	1000	1000	1000	1000
SRB-2-MRK-36XX	53	1500	1500	1500	1500
SRB-3-MRK-36XX	55	2250	2250	2250	2250
SRB-1-MRK-42XX	45	1000	1000	1000	1000
SRB-2-MRK-42XX	53	1500	1500	1500	1500
SRB-3-MRK-42XX	55	2250	2250	2250	2250
SRB-1-MRK-48XX	45	1000	1000	1000	1000
SRB-2-MRK-48XX	53	1500	2000	2000	2000
SRB-3-MRK-48XX	55	2250	2250	2250	2250
SRB-1-DRK-36XX	50	1000	1000	1000	1000
SRB-2-DRK-36XX	55	1500	1500	1500	1500
SRB-1-DRK-42XX	50	1000	1000	1000	1000
SRB-2-DRK-42XX	55	1500	1500	1500	1500
SRB-1-DRK-48XX	53	1000	1000	1000	1000
SRB-2-DRK-48XX	55	1500	1500	1500	1500

MAXIMUM CONTENT CAPACITY (POUNDS) (1),(2),(3)
HILTI HDA-P ANCHORS IN LIGHT-WEIGHT CONCRETE

RACK ENCLOSURE	RISER EMPTY WEIGHT	LOCATION IN BUILDING (Z/H) GROUND	1/3	2/3	ROOF
SRB-1-MRK-24XX	30	1000	1000	1000	925
SRB-2-MRK-24XX	36	1500	1500	1425	1100
SRB-3-MRK-24XX	50	2250	2125	1475	1125
SRB-1-MRK-31XX	33	1000	1000	1000	975
SRB-2-MRK-31XX	45	1500	1500	1500	1300
SRB-3-MRK-31XX	50	2250	2250	1800	1375
SRB-1-MRK-36XX	45	1000	1000	1000	975
SRB-2-MRK-36XX	53	1500	1500	1500	1400
SRB-3-MRK-36XX	55	2250	2250	1975	1500
SRB-1-MRK-42XX	45	1000	1000	1000	1000
SRB-2-MRK-42XX	53	1500	1500	1500	1500
SRB-3-MRK-42XX	55	2250	2250	2150	1650
SRB-1-MRK-48XX	45	1000	1000	1000	1000
SRB-2-MRK-48XX	53	1500	2000	2000	1625
SRB-3-MRK-48XX	55	2250	2250	2250	1775
SRB-1-DRK-36XX	50	1000	1000	1000	1000
SRB-2-DRK-36XX	55	1500	1500	1500	1450
SRB-1-DRK-42XX	50	1000	1000	1000	1000
SRB-2-DRK-42XX	55	1500	1500	1500	1500
SRB-1-DRK-48XX	53	1000	1000	1000	1000
SRB-2-DRK-48XX	55	1500	1500	1500	1500

MAXIMUM CONTENT CAPACITY (POUNDS) (1),(2),(3)
HILTI KWIK BOLT TZ ANCHORS IN NORMAL-WEIGHT CONCRETE

RACK ENCLOSURE	RISER EMPTY WEIGHT	LOCATION IN BUILDING (Z/H) GROUND	1/3	2/3	ROOF
SRB-1-MRK-24XX	30	1000	1000	1000	875
SRB-2-MRK-24XX	36	1500	1500	1400	1050
SRB-3-MRK-24XX	50	2250	2100	1450	1100
SRB-1-MRK-31XX	33	1000	1000	1000	925
SRB-2-MRK-31XX	45	1500	1500	1500	1150
SRB-3-MRK-31XX	50	2250	2250	1600	1200
SRB-1-MRK-36XX	45	1000	1000	1000	925
SRB-2-MRK-36XX	53	1500	1500	1500	1275
SRB-3-MRK-36XX	55	2250	2250	1775	1350
SRB-1-MRK-42XX	45	1000	1000	1000	950
SRB-2-MRK-42XX	53	1500	1500	1500	1425
SRB-3-MRK-42XX	55	2250	2250	2025	1500
SRB-1-MRK-48XX	45	1000	1000	1000	975
SRB-2-MRK-48XX	53	1500	2000	1950	1500
SRB-3-MRK-48XX	55	2250	2250	2200	1700
SRB-1-DRK-36XX	50	1000	1000	1000	1000
SRB-2-DRK-36XX	55	1500	1500	1500	1325
SRB-1-DRK-42XX	50	1000	1000	1000	1000
SRB-2-DRK-42XX	55	1500	1500	1500	1500
SRB-1-DRK-48XX	53	1000	1000	1000	1000
SRB-2-DRK-48XX	55	1500	1500	1500	1500

MAXIMUM CONTENT CAPACITY (POUNDS) (1),(2),(3)
HILTI KWIK BOLT TZ ANCHORS IN LIGHT-WEIGHT CONCRETE

RACK ENCLOSURE	RISER EMPTY WEIGHT	LOCATION IN BUILDING (Z/H) GROUND	1/3	2/3	ROOF
SRB-1-MRK-24XX	30	1000	975	675	500
SRB-2-MRK-24XX	36	1500	1200	800	600
SRB-3-MRK-24XX	50	1800	1250	850	650
SRB-1-MRK-31XX	33	1000	1000	700	525
SRB-2-MRK-31XX	45	1500	1300	875	675
SRB-3-MRK-31XX	50	2150	1350	925	700
SRB-1-MRK-36XX	45	1000	1000	700	525
SRB-2-MRK-36XX	53	1500	1450	950	725
SRB-3-MRK-36XX	55	2250	1525	1050	775
SRB-1-MRK-42XX	45	1000	1000	725	550
SRB-2-MRK-42XX	53	1500	1500	1100	825
SRB-3-MRK-42XX	55	2250	1750	1175	900
SRB-1-MRK-48XX	45	1000	1000	750	575
SRB-2-MRK-48XX	53	1500	1725	1150	850
SRB-3-MRK-48XX	55	2250	1950	1300	950
SRB-1-DRK-36XX	50	1000	1000	875	650
SRB-2-DRK-36XX	55	1500	1500	1025	775
SRB-1-DRK-42XX	50	1000	1000	875	650
SRB-2-DRK-42XX	55	1500	1500	1150	850
SRB-1-DRK-48XX	53	1000	1000	875	650
SRB-2-DRK-48XX	55	1500	1500	1300	950

REGISTERED PROFESSIONAL ENGINEER
WILLIAM M. KUN
C 57867
EXP. 6/2010
CIVIL
STATE OF CALIFORNIA

APPROVED
Fixed Equipment Anchorage
Office of Statewide Health Planning and Development
OPA-2184-07
Pre-approval Program Manager:
Anthony R. Pike
(916) 440-8470
Reviewed By: Igor Kharitonoff Date 07/21/09

USED ON: SRB-3-MRK-3124	APPROVALS	DATE
	MODELED NC	10/06/04
	DRAWN NC	10/06/04
NEXT ASSY: SRB-3-MRK-3124	CIRCLED DIMENSIONS ARE CRITICAL INSPECTION DIMENSIONS	
MATERIAL: SEE COMPONENTS	UNLESS OTHERWISE SPECIFIED, ALL DIMENSIONS ARE IN INCHES TOLERANCES ARE: DECIMAL: 2 PLC ±.03 3 PLC ±.010 FRACTIONS: ±1/32 ANGLES: ±1°	
FINISH: - -	SCALE = 3/64	
- -	SHEET 2 OF 3	

Middle Atlantic Products, Inc

TITLE: SEISMIC RISER BASE - -

PART NO. SRB-3-MRK-3124_96-01027 PART REV -

SIZE B DXF NO. - -

DWG NO. 96-01027_SRB_SERIES_RISER_BASES_2 DWG REV B

DEF-00111 REV A 10/16/08

THIS DRAWING CONTAINS TRADE INFORMATION DEEMED TO BE CONFIDENTIAL AND PROPRIETARY PROPERTY OF MIDDLE ATLANTIC PRODUCTS, INC. AND IS TO BE USED ONLY FOR THE PURPOSES FOR WHICH IT IS SUBMITTED AND FURTHER SHALL NOT BE COPIED IN WHOLE OR PART WITHOUT WRITTEN PERMISSION FIRST OBTAINED FROM MIDDLE ATLANTIC PRODUCTS, INC.

TABLE FOOTNOTES:

(1) INCLUDES ALL DRK & MRK SERIES RISER BASES WITH A HEIGHT BETWEEN 9 AND 24 INCHES.

(2) CONTENT CAPACITY INCLUDES WEIGHT OF THE RACK ENCLOSURES AND THE WEIGHT OF ALL LOADED CONTENTS SUPPORTED ON THE RISER BASE.

(3) THE SUPPORTED RACK ENCLOSURE CONTENTS SHALL BE DISTRIBUTED WITHIN THE ENCLOSURE SUCH THAT 50% OF THE TOTAL WEIGHT IS LOCATED WITHIN THE BOTTOM THIRD OF THE RACK ENCLOSURE HEIGHT, 25% IN THE MIDDLE THIRD, AND 25% IN THE TOP THIRD.

CONCRETE ANCHOR NOTES

1. CONCRETE ANCHORS SHALL BE ONE OF THE FOLLOWING TWO TYPES MANUFACTURED BY HILTI, INC. OF CARBON STEEL WITH DIAMETER, EMBEDMENT, AND SPACING AS SHOWN ON THE DRAWINGS.

   – HILTI HDA–P (PRESET CONFIGURATION) UNDERCUT ANCHORS (ICC ESR 1546)

   – HILTI KWIK BOLT TZ (KB–TZ) EXPANSION ANCHORS (ICC ESR 1917)

2. THE DISTANCE FROM THE ANCHOR TO THE EDGE OF CONCRETE SLAB SHALL BE GREATER THAN OR EQUAL TO THE LARGER OF:

   – 1.5 TIMES THE ANCHOR EMBEDMENT DEPTH OR

   – 10 TIMES THE NOMINAL ANCHOR DIAMETER

3. LOCATE ALL EXISTING REINFORCING BARS WITHIN 12 INCHES OF PROPOSED ANCHOR LOCATIONS PRIOR TO DRILLING FOR CONCRETE ANCHORS. DO NOT CUT, CORE, OR DRILL THROUGH EXISTING REINFORCING BARS WITHOUT PRIOR APPROVAL FROM THE SEOR.

4. ALL CONCRETE ANCHORS SHALL BE INSTALLED WITH PROPER TOOLS AND PROCEDURES IN STRICT ACCORDANCE WITH MANUFACTURER'S RECOMMENDATIONS AND ICC EVALUATION SERVICE REPORTS REFERENCED ABOVE.

5. TENSION TESTING SHALL OCCUR 24 HOURS OR MORE AFTER INSTALLATION OF THE CONCRETE ANCHORS.

6. APPLY TENSION TEST LOADS TO THE CONCRETE ANCHORS WITHOUT REMOVING THE NUT. IF NUT REMOVAL IS REQUIRED, REMOVE THE NUT AND INSTALL A THREADED COUPLER TO THE SAME TORQUE AS THE ORIGINAL NUT USING A TORQUE WRENCH AND THEN APPLY THE TEST LOAD.

7. REACTION LOADS FROM TEST FIXTURES MAY BE APPLIED IN CLOSE PROXIMITY TO THE ANCHOR BEING TESTED PROVIDED THE ANCHOR IS NOT RESTRAINED FROM WITHDRAWING BY THE FIXTURES.

8. TEST EQUIPMENT SHALL BE CALIBRATED BY AN APPROVED TESTING LABORATORY IN ACCORDANCE WITH STANDARD RECOGNIZED PROCEDURES.

9. ONE HALF (50%) OF EACH APPLICATION OF CONCRETE ANCHORS SHALL BE TESTED IN TENSION FOR 3 MINUTES ACCORDING TO THE TEST LOADS SHOWN BELOW. ONE APPLICATION OF ANCHORS SHALL BE DEFINED AS THOSE ANCHORS INSTALLED BY A SINGLE CREW IN A SINGLE DAY. IF ANY ANCHOR FAILS, IT SHALL BE REPLACED, RE–TESTED, AND ALL ANCHORS IN THE SAME APPLICATION SHALL BE TESTED. IF ANY ANCHOR FAILS, ALL PREVIOUSLY UNTESTED ANCHORS INSTALLED BY THAT CREW SHALL BE TESTED UNTIL TWENTY (20) CONSECUTIVE ANCHORS PASS, THEN RESUME 50%TESTING.

CONCRETE ANCHORS TEST LOADS FOR NORMAL–WEIGHT CONCRETE

ANCHOR TYPE	ANCHOR DIAMETER (INCHES)	MINIMUM EMBEDMENT (INCHES)	TENSION TEST LOAD (LBS)
HDA–P	0.47	5	8574
KB–TZ	1/2	3 1/4	3750

*WHEN USED IN LIGHT–WEIGHT CONCRETE, ANCHOR TEST LOADS ARE MULTIPLIED BY 0.60.

*TEST LOADS ARE BASED ON OSHPD 'CODE APPLICATION NOTICE' 2–1916A.8 METHOD 2; 2 TIMES THE MAXIMUM ALLOWABLE TENSION LOAD BUT NOT TO EXCEED 80% OF NOMINAL ANCHOR YIELD STRENGTH.

10. TENSION TESTING OF THE CONCRETE ANCHORS SHALL BE DONE IN THE PRESENCE OF THE INSPECTOR–OF–RECORD AND A REPORT OF THE TEST RESULTS SHALL BE SUBMITTED TO THE ENFORCEMENT AGENCY.

11. THE TENSION TEST OF AN ANCHOR SHALL BE ACCEPTED IF THERE IS NO OBSERVABLE MOVEMENT DURING THE APPLICATION OF THE TEST LOAD. A PRACTICAL WAY TO DETECT OBSERVABLE MOVEMENT IS WHETHER THE WASHER UNDER THE NUT BECOMES LOOSE.

HOW TO USE THIS PRE–APPROVAL

1. THE SEOR SHALL DETERMINE THE FOLLOWING:

   A. THE MODEL NUMBER OF THE UNIT TO BE USED.

   B. THE ELEVATION OF THE ROOF, H.

   C. THE ELEVATION OF THE FLOOR WHERE THE UNIT WILL BE INSTALLED ON, Z.

2. THE SEOR SHALL THEN DETERMINE THE RATIO OF Z/H AND CONSULT THE APPLICABLE TABLE TO DETERMINE THE MAXIMUM WEIGHT OF THE CONTENTS THAT CAN BE STORED ON THE RACK.

3. SEOR SHALL VERIFY THAT A PLACARD IS PLACED ON THE RACK STATING THE FOLLOWING:

   A. UNIT MODEL NUMBER.

   B. NAME OF THE BUILDING IN WHICH IT WILL BE INSTALLED.

   C. HIGHEST FLOOR WHERE IT CAN BE USED.

   D. MAXIMUM WEIGHT OF THE CONTENTS THAT CAN BE STORED ON THE RACK.

   E. A PROMINENT WARNING TO STORE THE HEAVIEST ITEMS ON THE LOWER LEVELS OF THE RACK.

4. SEOR SHALL VERIFY THAT THE CONCRETE FLOOR MEETS THE REQUIREMENTS OF THIS PRE–APPROVAL.

5. SEOR SHALL VERIFY THAT THE EXISTING STRUCTURE IS ADEQUATE TO SUPPORT THE LOADS AND FORCES IMPOSED ON IT BY THIS UNIT IN ADDITION TO ALL OTHER LOADS AND FORCES.

REGISTERED PROFESSIONAL ENGINEER
WILLIAM M. BRUIN
C 57867
EXP. 6/2010
CIVIL
STATE OF CALIFORNIA

APPROVED
Fixed Equipment Anchorage
Office of Statewide Health Planning and Development
OPA-2184-07
Pre-approval Program Manager:
Anthony R. Pike
(916) 440-8470
Reviewed By: Igor Kharitonoff Date 07/21/09

USED ON: SRB-3-MRK-3124	APPROVALS		DATE
	MODELED	NC	10/06/04
	DRAWN	NC	10/06/04
NEXT ASSY: SRB-3-MRK-3124	CIRCLED DIMENSIONS ARE CRITICAL INSPECTION DIMENSIONS		
MATERIAL: SEE COMPONENTS	UNLESS OTHERWISE SPECIFIED, ALL DIMENSIONS ARE IN INCHES TOLERANCES ARE: DECIMAL: 2 PLC ±.03 3 PLC ±.010 FRACTIONS: ±1/32 ANGLES: ±1°		
FINISH: – –	SCALE = 3/64		
– –	SHEET 3 OF 3		

Middle Atlantic Products, Inc

TITLE	SEISMIC RISER BASE – –	
PART NO.	SRB-3-MRK-3124_96-01027	PART REV –
SIZE B	DXF NO. – –	
DWG NO.	96-01027_SRB_SERIES_RISER_BASES_3	DWG REV B

DEF-00111 REV A 10/16/06