Wall-Mount Enclosures Type 12 Flange-Mount 296-298
Wall-Mount Enclosures Type 4 & 4X Premier™ Series 2-Point or 3-Point Locking 299-300
Wall-Mount Enclosures Disconnect Mechanisms 301-306
Ground-Mount Enclosures Type 12 Center & Flange-Mount Floor-Standing 3-Point Locking 307-311
Floor-Standing Enclosures Disconnect Mechanisms 312-319
Ground-Mount Enclosures Type 12 Heavy-Duty Single & Multi Door
Flange-Mount Free-Standing 3-Point Locking 320-326
Ground-Mount Enclosures Type 12 Modular Free-Standing 327-331
Free-Standing Enclosures Disconnect Mechanisms 332-339

Wall-Mount Enclosures
Type 12 Flange-Mount
Data Sheet

Application
- Houses electrical controls and instruments
- Protects against circulating dust, falling dirt and dripping noncorrosive liquids

- **Designed to house the following:**

1. Allen-Bradley† Bulletin 1494V or 1494U disconnect switches with flange-mounted variable depth operating mechanisms and Bulletin 1494V or 1494U flange-mounted variable depth operating mechanisms for circuit breakers.
2. Cutler-Hammer† Type C361 flange-mounted variable depth operating mechanisms with disconnect switches and Type C371 flange mounted variable depth operating mechanisms for circuit breakers. Also Flex Shaft™ handle mechanisms for circuit breakers.
3. General Electric† Type STDA flange handles and variable depth operating mechanisms for disconnect switches and circuit breakers. Also Spectra Flex™ cable operators for circuit breakers.
4. I-T-E Max-Flex™† flange-mounted variable depth operating handle for disconnect switches and circuit breakers as well as some fixed depth operators for disconnect switches.
5. Square D† Class 9422 disconnect switches with flange-mounted variable depth operating mechanisms or cable mechanisms and Class 9422 flange-mounted variable depth operating mechanisms or,cable mechanisms for circuit breakers.
6. ABB Controls† flange-mounted variable depth operating mechanisms for disconnect switches and circuit breakers.

Standards
- UL 508A listed, Type 12 and Type 13
- CSA C22.2 No.94 certified, Type 12 and Type 13
- Conforms to NEMA standard for Type 12 and Type 13

Finish
- Wash and phosphate undercoat
- ANSI 61 gray polyester powder finish

Accessories
- Panels
- Touch-up paint
- See Accessories section

Construction
- Enclosure and door are fabricated from (14) gauge steel
- All continuous welded seams are finished smooth
- Door is secured to the body with a heavy-duty continuous hinge
- Door has an interlock bracket, collar studs and hardware to accept a door closing mechanism
- Door has a seamless poured in-place gasket
- Ground stud provided on door and body
- Print pocket provided
- Formed lip around enclosure opening diverts liquids and contaminants
- Holes are provided on body flange and door for mounting a disconnect operating mechanism, (mechanism not furnished with enclosure -- see manufacturer's table, pages 301 - 306)
- Enclosures include a properly sized 2-pt latching bar (under 40 inches) or a 3-point latching bar (40 inches or higher)
- .375-16 collar studs are provided for mounting optional panel
- External mounting feet are provided for secure wall mounting

Discount Schedule: C2
Subclass: D00

Important Note

Latching bar, latching bar bracket interlock, hardware and instruction sheet to locate and install disconnects are furnished with enclosure.

Disconnect switch (or circuit breaker), operating handle, operating mechanism and door closing hardware are **not** furnished with enclosure, see disconnect ordering information pages 301-306

† Marks are the property of their respective owners.

Notes: We can provide special sizes, finishes and other modifications. Consult the factory for your special requirements.

Wall-Mount Enclosures
Type 12 Flange-Mount
Illustration Sheet and Catalog Number

Enclosure Catalog Number	Enclosure Size Height x Width x Depth A x B x C in.	mm	Panel Catalog Number	Panel Size Height x Width in.	mm
FD20218-12	20.00 x 21.37 x 8.00	508 x 543 x 203	AW2020P	17.00 x 17.00	432 x 432
FD24218-12	24.00 x 21.37 x 8.00	610 x 543 x 203	AW2420P	20.87 x 16.87	530 x 428
FD24258-12	24.00 x 25.37 x 8.00	610 x 644 x 203	AW2424P	20.87 x 20.87	530 x 530
FD30218-12	30.00 x 21.37 x 8.00	762 x 543 x 203	AW3020P	26.87 x 16.87	682 x 428
FD30258-12	30.00 x 25.37 x 8.00	762 x 644 x 203	AW3024P	26.87 x 20.87	682 x 530
FD36258-12	36.00 x 25.37 x 8.00	914 x 644 x 203	AW3624P	32.87 x 20.87	835 x 530
FD36318-12	36.00 x 31.37 x 8.00	914 x 797 x 203	AW3630P	32.87 x 26.87	835 x 682
FD42318-12	42.00 x 31.37 x 8.00	1067 x 797 x 203	AW4230P	38.87 x 26.87	987 x 682
FD42378-12	42.00 x 37.37 x 8.00	1067 x 949 x 203	AW4236P	38.87 x 32.87	987 x 835
FD48378-12	48.00 x 37.37 x 8.00	1219 x 949 x 203	AW4836P	44.87 x 32.87	1140 x 835
FD60378-12	60.00 x 37.37 x 8.00	1524 x 949 x 203	AW6036P	56.87 x 32.87	1444 x 835
FD202110-12	20.00 x 21.37 x 10.00	508 x 543 x 254	AW2020P	17.00 x 17.00	432 x 432
FD242110-12	24.00 x 21.37 x 10.00	610 x 543 x 254	AW2420P	20.87 x 16.87	530 x 428
FD242510-12	24.00 x 25.37 x 10.00	610 x 644 x 254	AW2424P	20.87 x 20.87	530 x 530
FD302110-12	30.00 x 21.37 x 10.00	762 x 543 x 254	AW3020P	26.87 x 16.87	682 x 428
FD302510-12	30.00 x 25.37 x 10.00	762 x 644 x 254	AW3024P	26.87 x 20.87	682 x 530
FD362510-12	36.00 x 25.37 x 10.00	914 x 644 x 254	AW3624P	32.87 x 20.87	835 x 530
FD363110-12	36.00 x 31.37 x 10.00	914 x 797 x 254	AW3630P	32.87 x 26.87	835 x 682
FD423110-12	42.00 x 31.37 x 10.00	1067 x 797 x 254	AW4230P	38.87 x 26.87	987 x 682
FD423710-12	42.00 x 37.37 x 10.00	1067 x 949 x 254	AW4236P	38.87 x 32.87	987 x 835
FD483710-12	48.00 x 37.37 x 10.00	1219 x 949 x 254	AW4836P	44.87 x 32.87	1140 x 835
FD603710-12	60.00 x 37.37 x 10.00	1524 x 949 x 254	AW6036P	56.87 x 32.87	1444 x 835
FD302512-12	30.00 x 25.37 x 12.00	762 x 644 x 305	AW3024P	26.87 x 20.87	682 x 530
FD363112-12	36.00 x 31.37 x 12.00	914 x 797 x 305	AW3630P	32.87 x 26.87	835 x 682
FD423112-12	42.00 x 31.37 x 12.00	1067 x 797 x 305	AW4230P	38.87 x 26.87	987 x 682
FD423712-12	42.00 x 37.37 x 12.00	1067 x 949 x 305	AW4236P	38.87 x 32.87	987 x 835
FD483712-12	48.00 x 37.37 x 12.00	1219 x 949 x 305	AW4836P	44.87 x 32.87	1140 x 835
FD603712-12	60.00 x 37.37 x 12.00	1524 x 949 x 305	AW6036P	56.87 x 32.87	1444 x 835
FD603712A-12*	60.00 x 37.37 x 12.00	1524 x 949 x 305	AW6036P	56.87 x 32.87	1444 x 835
FD363116-12	36.00 x 31.37 x 16.00	914 x 797 x 406	AW3630P	32.87 x 26.87	835 x 682
FD483716-12	48.00 x 37.37 x 16.00	1219 x 949 x 406	AW4836P	44.87 x 32.87	1140 x 835
FD603716-12	60.00 x 37.37 x 16.00	1524 x 949 x 406	AW6036P	56.87 x 32.87	1444 x 835

* The 400 amp and 600 amp Allen-Bradley† Bulletin 1494V or 1494U disconnect switches and I-T-E Siemens† 800 amp and 1200 amp circuit breakers will not fit any other enclosure except catalog number FD603712A-12. Enclosures 12 inches and 16 inches deep can be modified to accept I-T-E Siemens† 800 amp and 1200 amp circuit breakers. When enclosure "A" dimension is 30, 36, or 42 inches, verify the amount of wire bend space required for both the line and load sides.

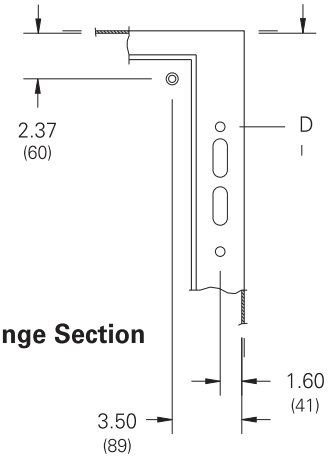

Flange Section

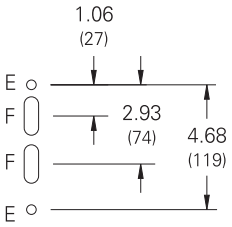

Flange Hole Detail

D

(When enclosure depth is:)

8 in.	8 mm	10 in.	10 mm	12 in.	12 mm	16 in.	16 mm
4.75	121	7.09	180	11.62	295	11.62	295

E = .28 (7) Dia. hole
F = .50 x 1.50 (13x38) slot

Flange Hole Location Table

† Marks are the property of their respective owners.

Notes: Catalog number FD603712A-12 has a larger cutout in the enclosure flange to accomodate the Allen-Bradley 1494V-H2 and the I-T-E FHOHN operating handles. Dimensions are in inches. Millimeters shown are for reference only. Data subject to change without notice.

Wall-Mount Enclosures
Type 12 Flange-Mount
Illustration Sheet

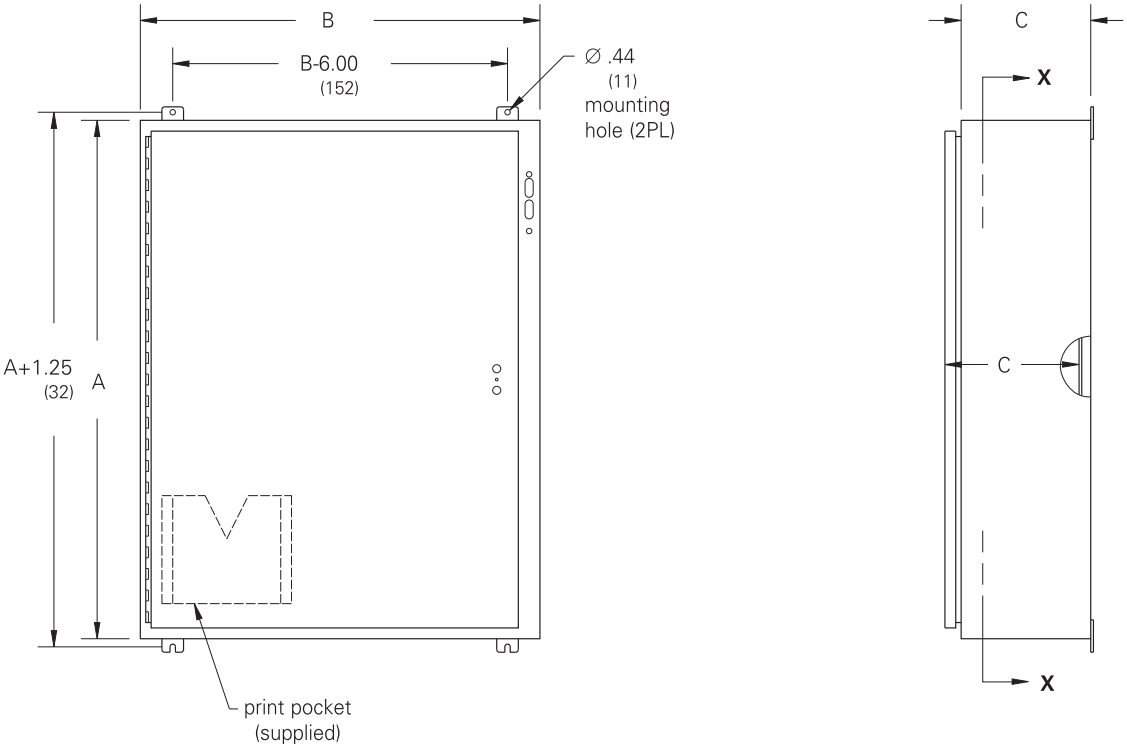

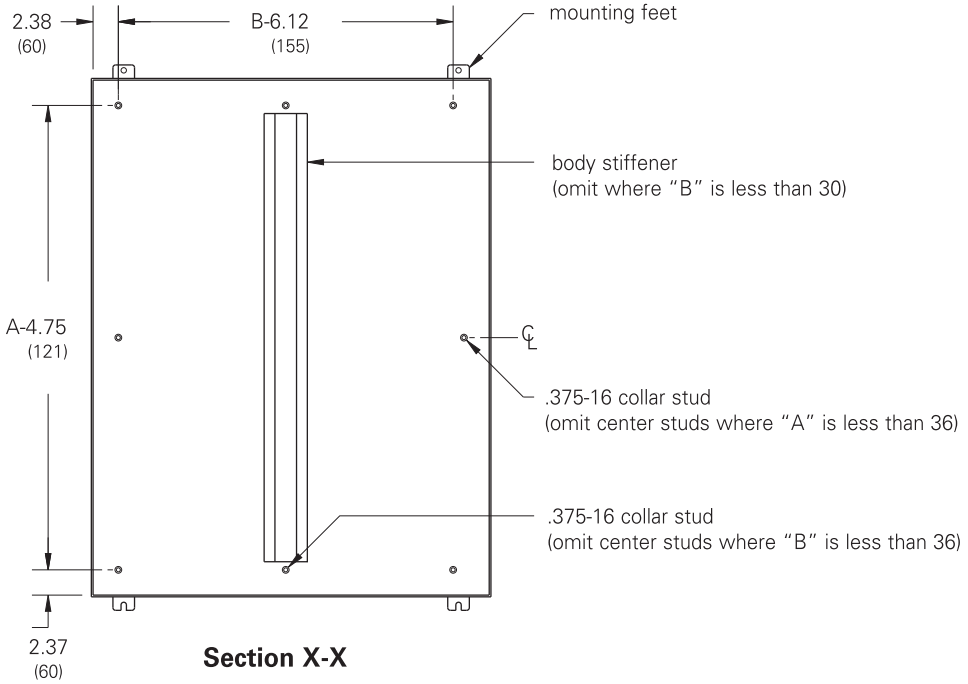

Section X-X

Notes: Dimensions are in inches. Millimeters shown are for reference only. Data subject to change without notice.

Wall-Mount Enclosures - Type 4 & 4X Premier™ Series with 2-Point or 3-Point Locking

Data Sheet

Application

- Provides housing for electrical controls and instruments
- Suitable for indoor or outdoor use
- Protects against circulating and windblown dust, falling dirt, dripping non-corrosive liquids, rain, splashing water, and hose-directed water

- **Designed to house the following:**

1. Allen-Bradley† Bulletin 1494V or 1494U disconnect switches with flange-mounted variable depth operating mechanisms and Bulletin 1494V or 1494U flange-mounted variable depth operating mechanisms for circuit breakers.
2. Cutler-Hammer† Type C361 flange-mounted variable depth operating mechanisms with disconnect switches and Type C371 flange-mounted variable depth operating mechanisms for circuit circuit breakers. Also Flex Shaft™ handle mechanisms for circuit breakers.
3. General Electric† Type STDA flange handles and variable depth operating mechanisms for disconnect switches and circuit breakers. Also Spectra Flex™ cable operators for circuit breakers.
4. ITE Max-Flex™† flange-mounted variable depth operating handle for disconnect switches and circuit breakers, as well as some fixed depth operators for disconnect switches.
5. Square D† Class 9422 disconnect switches with flange mounted variable depth operating mechanisms and Class 9422 flange-mounted variable depth operating mechanisms or cable mechanisms for circuit breakers.
6. ABB Controls† flange-mounted variable depth operating mechanisms for disconnect switches and circuit breakers.

† Marks are the property of their respective owners.

Standards

- UL 508A listed, Type 4 or 4X, Type 12 and Type 13
- CSA C22.2 No.94 certified, Type 12 and Type 13
- Conforms to NEMA standard for Type 4 and Type 12/13

Finish

- Wash and phosphate undercoat
- ANSI 61 gray polyester powder finish
- Stainless enclosures are offered with a brushed finish in both 304 and 316L stainless steel.

Accessories

- Premier panels
- NEMA panel adapters
- Depth adjustment brackets
- Print pockets
- Mounting foot kits
- Swing-out panels

Construction

- Enclosure and door are fabricated from code gauge steel (see table)
- Hardware kit (provided) contains grounding hardware, .312-18 flanged hex nuts for panel mounting, and sealing washers for body mounting holes
- Body flange trough design, formed around body opening, diverts liquid contaminants away from door opening
- Reduced width flange design increases enclosure opening
- Ground stud provided on enclosure body with provision on door
- .312-18 collar studs are provided for mounting optional Premier panels
- Enclosure mounting holes in body provided for direct mounting or optional mounting feet
- Utility bracket provides wire management and accessory mounting
- Padlocking "tool-to-open" handle with 2-point or 3-point door closing hardware installed
- Door is secured to the body with a concealed hinge
- Door is easily removed and interchangeable
- Door has a seamless foam-in-place gasket
- Door opens 170° for easy access
- Latching system interlocks with the disconnect handle for added safety

Discount Schedule: C2

Subclass: TCD (Type 4)
TED (Type 4X)

Important Note
Door closing hardware, handle,latching bar, latching bar bracket interlock, hardware and instruction sheet to locate and install disconnects are furnished with enclosure.
Disconnect switch (or circuit breaker), operating handle and operating mechanism are **not** furnished with enclosure, see disconnect ordering information pages 301 - 306

Notes: We can provide special sizes, finishes and other modifications. Consult the factory for your special requirements.

Wall-Mount Enclosures - Type 4 & 4X Premier™ Series with 2-Point or 3-Point Locking

Illustration Sheet and Catalog Number

Enclosure Catalog Number	Door Gauge in.	Body Gauge in.	Enclosure Size Height x Width x Depth A x B x C in.	mm	Panel Catalog Number	Panel Size H x W in.	mm	Mounting D x E in.	mm	J in.	mm
DSC20228 DSC20228SS4 DSC20228SS6	14	16	20.00 x 22.00 x 8.00	508 x 559 x 203	2020P 2020PSS4 --	18.00 x 18.00	457 x 457	18.50 x 20.37	470 x 518	5.0	127
DSC24228 DSC24228SS4 DSC24228SS6	14	16	24.00 x 22.00 x 8.00	610 x 559 x 203	2420P 2420PSS4 --	22.00 x 18.00	559 x 457	22.50 x 20.37	572 x 518	6.0	153
DSC24268 DSC24268SS4 DSC24268SS6	14	16	24.00 x 26.00 x 8.00	610 x 660 x 203	2424P 2424PSS4 --	22.00 x 22.00	559 x 559	22.50 x 24.37	572 x 619	6.0	153
DSC30268 DSC30268SS4 DSC30268SS6	14	16	30.00 x 26.00 x 8.00	762 x 660 x 203	3024P 3024PSS4 --	28.00 x 22.00	711 x 559	28.50 x 24.37	724 x 619	6.0	153
DSC36268 DSC36268SS4 DSC36268SS6	14	14	32.00 x 26.00 x 8.00	914 x 660 x 203	3624P 3624PSS4 --	34.00 x 22.00	864 x 559	34.50 x 24.37	876 x 619	6.0	153
DSC36328 DSC36328SS4 DSC36328SS6	14	14	36.00 x 32.00 x 8.00	914 x 813 x 203	3630P 3630PSS4 --	34.00 x 28.00	864 x 711	34.50 x 30.37	869 x 771	6.0	153
DSC363212 DSC363212SS4 DSC363212SS6	14	14	36.00 x 32.00 x 12.00	914 x 813 x 305	3630P 3630PSS4 --	34.00 x 28.00	864 x 711	34.50 x 30.37	869 x 771	6.0	153
DSC423212 DSC423212SS4 DSC423212SS6	14	14	42.00 x 32.00 x 12.00	1067 x 813 x 305	4230P 4230PSS4 --	40.00 x 28.00	1016 x 711	40.50 x 30.37	1029 x 771	21.0	53
DSC423812 DSC423812SS4 DSC423812SS6	14	14	42.00 x 38.00 x 12.00	1067 x 965 x 305	4236P 4236PSS4 --	40.00 x 34.00	1016 x 864	40.50 x 36.37	1029 x 924	21.0	53
DSC483812 DSC483812SS4 DSC483812SS6	14	14	48.00 x 38.00 x 12.00	1219 x 965 x 305	4836P 4836PSS4 --	46.00 x 34.00	1168 x 864	46.50 x 36.37	1181 x 924	24.0	610
DSC603812 DSC603812SS4 DSC603812SS6	14	14	60.00 x 38.00 x 12.00	1524 x 965 x 305	6036P 6036PSS4 --	58.00 x 34.00	1473 x 864	58.50 x 36.37	1486 x 924	30.0	762
DSC423816 DSC423816SS4 DSC423816SS6	14	14	42.00 x 38.00 x 16.00	1067 x 965 x 406	4236P 4236PSS4 --	40.00 x 34.00	1016 x 864	40.50 x 36.37	1029 x 924	21.0	53
DSC483816 DSC483816SS4 DSC483816SS6	14	14	48.00 x 38.00 x 16.00	1219 x 965 x 406	4836P 4836PSS4 --	46.00 x 34.00	1168 x 864	46.50 x 36.37	1181 x 924	24.0	610
DSC603816 DSC603816SS4 DSC603816SS6	14	14	60.00 x 38.00 x 16.00	1524 x 965 x 406	6036P 6036PSS4 --	58.00 x 34.00	1473 x 864	58.50 x 36.37	1486 x 924	30.0	762

Painted Steel - Part Number alone. Stainless Steel 304 - Part Number with SS4. Stainless Steel 316 - Part Number with SS6.

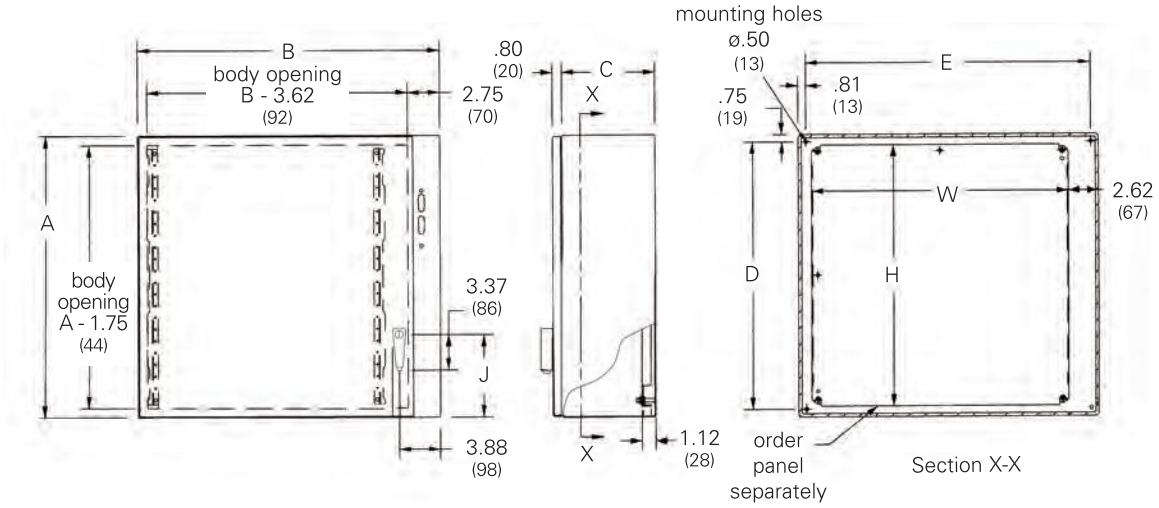

Notes: Dimensions are in inches. Millimeters shown are for reference only. Data subject to change without notice.

Wall-Mount Enclosures

Disconnect Ordering Information

Allen-Bradley †

1494V or 1494U Disconnect Mechanism

Allen-Bradley † Mechanism for Switches	Amp	Fuse Clip Rating		Fuse Class	A		B		C (when enclosure depth is:) 8		10		12		16	
		Amp	Volt		in.	mm	in.	mm	in.	mm	in.	mm	in.	mm	in.	mm
DS30	30A	(non)	(non)	--	5.75	146	6.37	162	2.87	73	5.25	133	9.75	248	9.75	248
DS30	30A	30A	250V	H,K,R	7.12	181	6.37	162	2.87	73	5.25	133	9.75	248	9.75	248
DS30	30A	30A	600V	H,K,R	9.87	251	6.37	162	2.87	73	5.25	133	9.75	248	9.75	248
DS30	30A	30A	600V	J	7.12	181	6.37	162	2.87	73	5.25	133	9.75	248	9.75	248
DS30	30A	60A	250V	H,K	7.87	200	6.37	162	2.87	73	5.25	133	9.75	248	9.75	248
DS30	30A	60A	600V	H,K	10.37	263	6.37	162	2.87	73	5.25	133	9.75	248	9.75	248
DS30	30A	60A	600V	J	7.25	184	6.37	162	2.87	73	5.25	133	9.75	248	9.75	248
DS60	60A	(non)	(non)	--	5.87	149	6.37	162	2.75	70	5.12	130	9.62	244	9.62	244
DS60	60A	60A	250V	H,K,R	8.00	203	6.37	162	2.75	70	5.12	130	9.62	244	9.62	244
DS60	60A	60A	600V	H,K,R	10.50	267	6.37	162	2.75	70	5.12	130	9.62	244	9.62	244
DS60	60A	60A	600V	J	7.37	187	6.37	162	2.75	70	5.12	130	9.62	244	9.62	244
DS60	60A	30A	600V	H,K,R	10.00	254	6.37	162	2.75	70	5.12	130	9.62	244	9.62	244
DS60	60A	100A	250V	H,K	10.50	267	6.37	162	2.75	70	5.12	130	9.62	244	9.62	244
DS60	60A	100A	600V	H,K	12.50	318	6.37	162	2.75	70	5.12	130	9.62	244	9.62	244
DS60	60A	100A	600V	J	9.25	235	6.37	162	2.75	70	5.12	130	9.62	244	9.62	244
DS100	100A	(non)	(non)	--	8.25	210	7.62	194	*	*	3.62	92	8.12	206	8.12	206
DS100	100A	100A	250V	H,K,R	13.87	352	7.62	194	*	*	3.62	92	8.12	206	8.12	206
DS100	100A	100A	600V	H,K,R	15.87	403	7.62	194	*	*	3.62	92	8.12	206	8.12	206
DS100	100A	100A	600V	J	12.62	321	7.62	194	*	*	3.62	92	8.12	206	8.12	206
DS100	100A	200A	600V	H,K	14.75	375	7.62	194	*	*	3.62	92	8.12	206	8.12	206
DS100	100A	200A	600V	H,K	17.25	438	7.62	194	*	*	3.62	92	8.12	206	8.12	206
DS100	100A	200A	600V	J	13.37	340	7.62	194	*	*	3.62	92	8.12	206	8.12	206

Allen-Bradley † Mechanism for Circuit Breakers	Amp	Circuit Breaker Type		A		B		C (when enclosure depth is:) 8		10		12		16	
		Manufacturer	Frame(s)	in.	mm	in.	mm	in.	mm	in.	mm	in.	mm	in.	mm
M40	150A	General Electric	TED, THED, TEC	6.12	155	4.25	108	4.25	108	6.62	168	11.12	282	11.12	282
M40	150A	Westinghouse	F (series C)	5.50	140	4.25	108	4.25	108	6.62	168	11.12	282	11.12	282
M50	250A	Westinghouse	J (series C)	11.00	279	4.50	114	*	*	*	*	10.62	270	10.62	270
M60	400A	Westinghouse	K (series C)	11.00	279	5.87	149	*	*	*	*	10.50	267	10.50	267

* Do not install disconnects in this depth enclosure.

The dimensional information provided in this table is derived from information supplied by the manufacturer of the equipment to be installed. Fit and function of all equipment should be checked before and after installation to assure proper and safe operation and compliance with the applicable regulations, codes and standards.

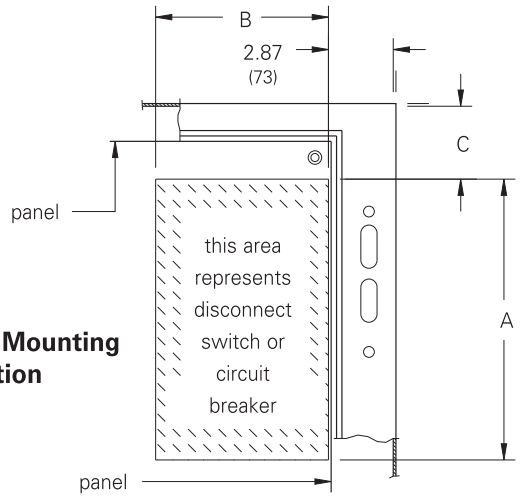

Disconnect Mounting Location

† Marks are the property of their respective owners.

Notes: Dimensions are in inches. Millimeters shown are for reference only. Data subject to change without notice.

Wall-Mount Enclosures

Disconnect Ordering Information

Cutler-Hammer †

C361 Disconnect Mechanism

Cutler-Hammer † Mechanism for Switches	Amp	Fuse Clip Rating		Fuse Class	A		B		C (when enclosure depth is:) 8		10		12		16	
		Amp	Volt		in.	mm	in.	mm	in.	mm	in.	mm	in.	mm	in.	mm
NC	30A	(non)	(non)	--	6.00	152	5.75	146	3.50	89	5.75	146	10.25	260	10.25	260
SC21	30A	30A	250V	H,K,R	9.00	229	5.75	146	3.50	89	5.75	146	10.25	260	10.25	260
SC61	30A	30A	600V	H,K,R	9.00	229	5.75	146	3.50	89	5.75	146	10.25	260	10.25	260
SC61	30A	30A	600V	J	9.00	229	5.75	146	3.50	89	5.75	146	10.25	260	10.25	260
SC61	30A	60A	250V	H,K,R	9.50	241	5.75	146	3.50	89	5.75	146	10.25	260	10.25	260
ND	60A	(non)	(non)	--	6.00	152	5.75	146	3.50	89	5.75	146	10.25	260	10.25	260
SD22	60A	30A	600V	J	9.00	229	5.75	146	3.50	89	5.75	146	10.25	260	10.25	260
SD22	60A	60A	250V	H,K,R	9.50	241	5.75	146	3.50	89	5.75	146	10.25	260	10.25	260
SD62	60A	60A	600V	H,K,R	9.50	241	5.75	146	3.50	89	5.75	146	10.25	260	10.25	260
SD62	60A	60A	600V	J	9.00	229	5.75	146	3.50	89	5.75	146	10.25	260	10.25	260
NE	100A	(non)	(non)	--	6.00	152	7.12	181	3.00	76	5.37	136	9.87	251	9.87	251
SE263	100A	100A	250V	H,K,R	10.62	270	7.12	181	3.00	76	5.37	136	9.87	251	9.87[1]	251
SE263	100A	100A	600V	H,K,R	10.62	270	7.12	181	3.00	76	5.37	136	9.87	251	9.87[1]	251
SE263	100A	100A	600V	J	9.37	238	7.12	181	3.00	76	5.37	136	9.87	251	9.87[1]	251
NF (2)	200A	(non)	(non)	--	16.75	425	9.75	248	*	*	*	*	8.00	203	8.00[1]	203
SF264 (2)	200A	200A	250V	H,K,R	16.75	425	9.75	248	*	*	*	*	8.00	203	8.00	203
SF264 (2)	200A	200A	600V	H,K,R	16.75	425	9.75	248	*	*	*	*	8.00	203	8.00	203
SF264 (2)	200A	200A	600V	J	16.75	425	9.75	248	*	*	*	*	8.00	203	8.00	203

C371 Disconnect Mechanism

Cutler-Hammer † Mechanism for Circuit Breakers	Amp	Circuit Breaker Type		A		B		C (when enclosure depth is:) 8		10		12		16	
in.	mm	Manufacturer in.	Frame(s) mm	in.	mm	in.	mm	in.	mm	in.	mm				
C371E (1)	150A	Cutler-Hammer	HMCP,FS,FH	6.50	165	5.25	133	4.43	113	6.81	173	11.43	290	11.43[1]	290
C371F (1)	225A	Cutler-Hammer	HMCP,JS,JH,JL	11.50	292	7.75	197	*	*	6.75	171	11.25	286	11.25[1]	286
C371F (1)	400A	Cutler-Hammer	HMCP,KS,KH	10.50	267	7.75	197	*	*	*	*	10.75	273	10.75[1]	273
C371G (1)	600A	Cutler-Hammer	LS,LH	9.75	248	11.62	295	*	*	*	*	9.25	235	9.25[1]	235
C371E (1)	150A	Westinghouse	F (series C)	6.50	165	5.25	133	4.43	113	6.81	173	11.43	290	11.43[1]	290
C371F (1)	250A	Westinghouse	J (series C)	11.50	292	7.75	197	*	*	6.75	171	11.25	286	11.25[1]	286
C371F (1)	400A	Westinghouse	K (series C)	10.50	267	7.75	197	*	*	*	*	10.75	273	10.75[1]	273
C371G (1)	600A	Westinghouse	LA,LC	10.87	276	11.62	295	*	*	*	*	9.25	235	9.25[1]	235

* Do not install disconnects in this depth enclosure.

(1) Wire bending space "C" does not allow for the maximum size cable in some depth enclosures.

(2) Do not install 200A switch in enclosures less than 30 inches high.

The dimensional information provided in this table is derived from information supplied by the manufacturer of the equipment to be installed. Fit and function of all equipment should be checked before and after installation to assure proper and safe operation and compliance with the applicable regulations, codes and standards.

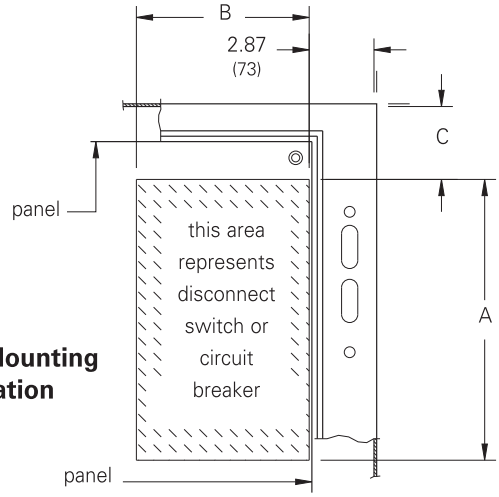

Disconnect Mounting Location

† Marks are the property of their respective owners.

Notes: Dimensions are in inches. Millimeters shown are for reference only. Data subject to change without notice.

Wall-Mount Enclosures

Disconnect Ordering Information

General Electric †

TDA Disconnect Mechanism

General Electric † Mechanism for Switches	Amp	Fuse Clip Rating		Fuse Class	A		B		C (when enclosure depth is:) 8		10		12		16	
		Amp	Volt		in.	mm	in.	mm	in.	mm	in.	mm	in.	mm	in.	mm
TDOM1A	30A	(non)	(non)	--	6.31	160	5.00	127	6.18	157	7.62	194	12.12	308	12.12	308
TDOM1A	30A	30A	250V	H,R	6.31	160	5.00	127	6.18	157	7.62	194	12.12	308	12.12	308
TDOM1B	30A	30A	600V	H,R	10.93	278	5.00	127	6.18	157	7.62	194	12.12	308	12.12	308
TDOM1B	30A	30A	250V	H,R	10.93	278	5.00	127	6.18	157	7.62	194	12.12	308	12.12	308
TDOM1B	30A	60A	600V	H,R	10.93	278	5.00	127	6.18	157	7.62	194	12.12	308	12.12	308
TDOM1A	60A	(non)	(non)	--	6.31	160	5.00	127	6.18	157	7.62	194	12.12	308	12.12	308
TDOM1B	60A	60A	250V	H,R	10.93	278	5.00	127	6.18	157	7.62	194	12.12	308	12.12	308
TDOM1B	60A	60A	600V	H,R	10.93	278	5.00	127	6.18	157	7.62	194	12.12	308	12.12	308
TDOM1B	60A	100A	250V	H,R	10.93	278	5.00	127	6.18	157	7.62	194	12.12	308	12.12	308
TDOM1B	60A	100A	600V	H,R	10.93	278	5.00	127	6.18	157	7.62	194	12.12	308	12.12	308
TDOM1A	100A	(non)	(non)	--	6.31	160	5.00	127	6.18	157	7.62	194	12.12	308	12.12	308
TDOM1B	100A	100A	250V	H,R	10.93	278	5.00	127	6.18	157	7.62	194	12.12	308	12.12	308
TDOM1B	100A	100A	600V	H,R	10.93	278	5.00	127	6.18	157	7.62	194	12.12	308	12.12	308
TDOM1B	100A	200A	250V	H,R	10.93	278	5.00	127	6.18	157	7.62	194	12.12	308	12.12	308
TDOM1B	100A	200A	600V	H,R	10.93	278	5.00	127	6.18	157	7.62	194	12.12	308	12.12	308
TDOM2	200A	(non)	(non)	--	9.12	232	8.87	225	*	*	*	*	9.50	241	9.50	241
TDOM2	200A	200A	250V	H,R	17.50	445	8.87	225	*	*	*	*	9.50	241	9.50	241
TDOM2	200A	200A	600V	H,R	17.50	445	8.87	225	*	*	*	*	9.50	241	9.50	241

General Electric † Mechanism for Circuit Breakers	Amp	Circuit Breaker Type	A		B		C (when enclosure depth is:) 8		10		12		16	
			in.	mm	in.	mm	in.	mm	in.	mm	in.	mm	in.	mm
TDOM1A	150A	TEB,TEC,TED,THED	6.43	163	5.00	127	6.06	154	7.50	191	12.06	306	12.06	306
TDOM1B	150A	TBI,TEC,TECL	11.06	281	5.00	127	6.06	154	7.50	191	12.06	306	12.06	306
TDOM1C	150A	TEL	6.43	163	5.00	127	6.06	154	7.50	191	12.06	306	12.06	306
TDOM1D	150A	THLCI	9.75	248	5.00	127	*	*	5.12	130	9.62	244	9.62	244
TDOM3	225A	TFJ,TFK,THFK,TFL	11.43	290	5.50	127	*	*	6.06	154	10.62	270	10.62	270
TDOM4	400A	TJJ,TJK4,THJK4,TJL4V	10.25	260	9.12	232	*	*	5.12	130	9.68	246	9.68	246
TDOM4	600A	TJK6,THJK6,TJ4V,TJL4V	10.25	260	9.12	232	*	*	5.12	130	9.68	246	9.68	246
TDOM5	400A	TB4,TJH6S	16.25	413	9.12	232	*	*	5.12	130	9.68	246	9.68	246
TDOM6	225A	TLB2,THLC2	14.25	362	9.12	232	*	*	*	*	9.12	232	9.12	232
TDOM6	400A	TLB4,THLC4	15.62	397	9.12	232	*	*	*	*	7.75	197	7.75	197

* Do not install disconnects in this depth enclosure.

The dimensional information provided in this table is derived from information supplied by the manufacturer of the equipment to be installed. Fit and function of all equipment should be checked before and after installation to assure proper and safe operation and compliance with the applicable regulations, codes and standards.

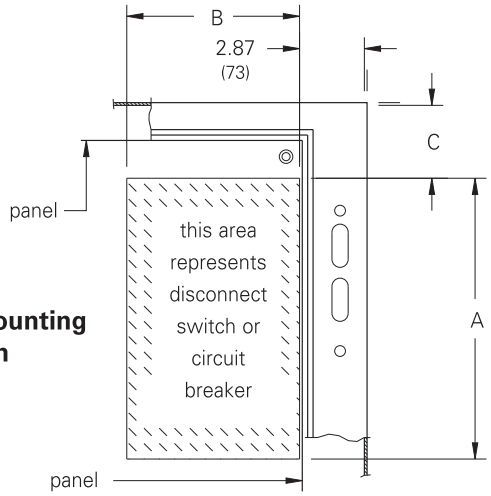

Disconnect Mounting Location

† Marks are the property of their respective owners.

Notes: Dimensions are in inches. Millimeters shown are for reference only. Data subject to change without notice.

Wall-Mount Enclosures

Disconnect Ordering Information

I-T-E Siemens® †

MAX-FLEX Disconnect Mechanism

Encl. Depth	I-T-E † Mechanism for Circuit Breaker	Cable Length	Amp	Circuit Breaker Frame	A(1) device in.	A device mm	A nominal in.	A nominal mm	A min in.	A min mm	A max in.	A max mm	B(2) device in.	B device mm	B max in.	B max mm
8	FHOE036	36	125A	ED,HED,ED6ETI	6.37	162	10.12	257	1.25	32	21.00	533	3.00	76	14.50	368
	FHOE036	36	125A	CED6ETI	8.50	216	13.25	337	4.50	114	24.25	616	3.00	76	14.50	368
	FHOF036	36	250A	FD,HFD,FXD,FXDETI	9.50	241	10.37	263	1.00	25	21.25	540	4.50	114	13.00	330
	FHOF036	36	250A	CFD,CFDETI	14.12	359	15.00	381	3.12	79	21.25	540	4.50	114	13.00	330
	FHOJ036	36	400A	JD,HJD,JXD2,JXD6	11.00	279	10.00	254	1.12	28	20.87	530	7.50	191	14.50	368
	FHOJ036	36	400A	SJD,SHJD,JXD6ETI	11.00	279	10.00	254	1.12	28	20.87	530	7.50	191	14.50	368
	FHOJ036	36	400A	CJD,SCJD,CJD6ETI	17.87	454	16.87	428	6.75	171	26.50	673	7.50	191	14.50	368
	FHOJ036	36	600A	LD,LXD,HLD	11.00	279	10.00	254	1.12	28	20.87	530	7.50	191	14.50	368
	FHOJ036	36	600A	SLD,SHLD,LXD6ETI	11.00	279	10.00	254	1.12	28	20.87	530	7.50	191	14.50	368
	FHOJ036	36	600A	CLD,SCLD,CLD6ETI	17.87	454	16.87	428	6.75	171	26.50	673	7.50	191	14.50	368
10	FHOE036	36	125A	ED,HED,ED6ETI	6.37	162	12.50	318	2.62	67	22.87	581	3.00	76	14.25	362
	FHOE036	36	125A	CED6ETI	8.50	216	16.62	422	5.87	149	26.12	663	3.00	76	14.25	362
	FHOF036	36	250A	FD,HFD,FXD,FXDETI	9.50	241	12.75	324	2.87	73	23.12	587	4.50	114	12.75	324
	FHOF036	36	250A	CFD,CFDETI	14.12	359	17.37	441	5.50	140	28.00	711	4.50	114	12.75	324
	FHOJ036	36	400A	JD,HJD,JXD2,JXD6	11.00	279	12.37	314	2.50	64	22.75	578	7.50	191	14.25	362
	FHOJ036	36	400A	SJD,SHJD,JXD6ETI	11.00	279	12.37	314	2.50	64	22.75	578	7.50	191	14.25	362
	FHOJ036	36	400A	CJD,SCJD,CJD6ETI	17.87	454	19.25	489	9.37	238	29.62	160	7.50	191	14.25	362
	FHOJ036	36	600A	LD,LXD,HLD	11.00	279	12.37	314	2.50	64	22.75	578	7.50	191	14.25	362
	FHOJ036	36	600A	SLD,SHLD,LXD6ETI	11.00	279	12.37	314	2.50	64	22.75	578	7.50	191	14.25	362
	FHOJ036	36	600A	CLD,SCLD,CLD6ETI	17.87	454	19.25	489	9.37	238	29.62	160	7.50	191	14.25	362
12	FHOE036	36	125A	ED,HED,ED6ETI	6.37	162	17.00	432	6.37	162	27.50	699	3.00	76	13.75	349
	FHOE036	36	125A	CED6ETI	8.50	216	19.87	505	9.62	244	30.37	771	3.00	76	13.75	349
	FHOF036	36	250A	FD,HFD,FXD,FXDETI	9.50	241	17.25	438	6.62	168	27.37	695	4.50	114	12.25	311
	FHOF036	36	250A	CFD,CFDETI	14.12	359	21.87	555	11.37	289	32.12	816	4.50	114	12.25	311
	FHOJ036	36	400A	JD,HJD,JXD2,JXD6	11.00	279	16.87	428	6.25	159	26.87	682	7.50	191	13.75	349
	FHOJ036	36	400A	SJD,SHJD,JXD6ETI	11.00	279	16.87	428	6.25	159	26.87	682	7.50	191	13.75	349
	FHOJ036	36	400A	CJD,SCJD,CJD6ETI	17.87	454	23.75	603	13.12	333	33.87	860	7.50	191	13.75	349
	FHOJ036	36	600A	LD,LXD,HLD	11.00	279	16.87	428	6.25	159	26.87	682	7.50	191	13.75	349
	FHOJ036	36	600A	SLD,SHLD,LXD6ETI	11.00	279	16.87	428	6.25	159	26.87	682	7.50	191	13.75	349
	FHOJ036	36	600A	CLD,SCLD,CLD6ETI	17.87	454	23.75	603	13.12	333	33.87	860	7.50	191	13.75	349
16	FHOE036	36	125A	ED,HED,ED6ETI	6.37	162	17.00	432	7.75	197	26.50	673	3.00	76	11.50	292
	FHOE036	36	125A	CED6ETI	8.50	216	19.87	505	11.12	282	29.87	759	3.00	76	11.50	292
	FHOF036	36	250A	FD,HFD,FXD,FXDETI	9.50	241	17.25	438	8.12	206	26.87	682	4.50	114	10.00	254
	FHOF036	36	250A	CFD,CFDETI	14.12	359	21.87	555	13.00	330	31.62	803	4.50	114	10.00	254
	FHOJ036	36	400A	JD,HJD,JXD2,JXD6	11.00	279	16.87	428	7.62	194	26.37	670	7.50	191	11.50	292
	FHOJ036	36	400A	SJD,SHJD,JXD6ETI	11.00	279	16.87	428	7.62	194	26.37	670	7.50	191	11.50	292
	FHOJ036	36	400A	CJD,SCJD,CJD6ETI	17.87	454	23.75	603	14.62	371	33.37	848	7.50	191	11.50	292
	FHOJ036	36	600A	LD,LXD,HLD	11.00	279	16.87	428	7.62	194	26.37	670	7.50	191	11.50	292
	FHOJ036	36	600A	SLD,SHLD,LXD6ETI	11.00	279	16.87	428	7.62	194	26.37	670	7.50	191	11.50	292
	FHOJ036	36	600A	CLD,SCLD,CLD6ETI	17.87	454	23.75	603	14.62	371	33.37	848	7.50	191	11.50	292

(1) Flexible operating cable allows disconnect to be mounted within minimum and maximum of "A" dimension when "B" is min. (2.87).

(2) Flexible operating cable allows disconnect to be mounted within minimum, (2.87) and maximum of "B" dimension when "A" is nominal.

The dimensional information provided in this table is derived from information supplied by the manufacturer of the equipment to be installed. Fit and function of all equipment should be checked before and after installation to assure proper and safe operation and compliance with the applicable regulations, codes and standards.

† Marks are the property of their respective owners.

Disconnect Mounting Location

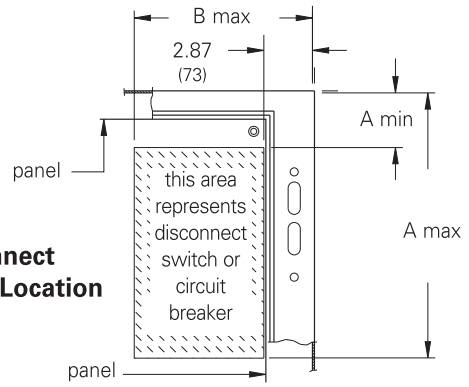

Notes: Dimensions are in inches. Millimeters shown are for reference only. Data subject to change without notice.

Wall-Mount Enclosures

Disconnect Ordering Information

Square D® †

9422 Disconnect Mechanism

Square D † Mechanism for Switches	Amp	Fuse Clip Rating		Fuse Class	A		B		C (when enclosure depth is:) 8		10		12		16	
		Amp	Volt		in.	mm	in.	mm	in.	mm	in.	mm	in.	mm	in.	mm
RC-1	30A	(non)	(non)	--	3.37	86	6.87	174	4.62	117	7.00	178	11.50	292	11.50	292
RC-2	30A	30A	250V	H,K,R	5.12	130	6.87	174	4.62	117	7.00	178	11.50	22	11.50	292
RC-3	30A	30A	600V	H,K,R	8.12	206	6.87	174	4.62	117	7.00	178	11.50	292	11.50	292
RC-3	30A	30A	600V	J	5.12	130	6.87	174	4.62	117	7.00	178	11.50	292	11.50	292
RC-3	30A	60A	250V	H,K,R	6.12	155	6.87	174	4.62	117	7.00	178	11.50	292	11.50	292
TC-1	30A	(non)	(non)	--	7.75	197	5.75	146	3.12	79	5.12	130	10.50	267	10.50	267
TC-2	30A	30A	250V	H,K,R	7.75	197	5.75	146	3.12	79	5.12	130	10.50	267	10.50	267
TC-3	30A	30A	600V	H,K,R	7.75	197	5.75	146	3.12	79	5.12	130	10.50	267	10.50	267
TC-3	30A	30A	600V	J	7.75	197	5.75	146	3.12	79	5.12	130	10.50	267	10.50	267
TC-3	30A	60A	250V	H,K,R	7.75	197	5.75	146	3.12	79	5.12	130	10.50	267	10.50	267
TD-1	60A	(non)	(non)	--	9.50	241	6.37	162	3.62	92	6.00	152	10.50	267	10.50	267
TD-2	60A	30A	600V	H,K,R	9.50	241	6.37	162	3.62	92	6.00	152	10.50	267	10.50	267
TD-2	60A	60A	250V	H,K,R	7.62	194	6.37	162	3.62	92	6.00	152	10.50	267	10.50	267
TD-3	60A	60A	600V	H,K,R	10.12	257	6.37	162	3.62	92	6.00	152	10.50	267	10.50	267
TD-3	60A	60A	600V	J	7.62	194	6.37	162	3.62	92	6.00	152	10.50	267	10.50	267
TE-1	100A	(non)	(non)	--	6.12	155	8.12	206	*	*	5.75	146	10.25	260	10.25	260
TE-2	100A	100A	250V	H,K,R	8.87	225	8.12	206	*	*	5.75	146	10.25	260	10.25	260
TE-2	100A	100A	600V	H,K,R	10.87	276	8.12	206	*	*	5.75	146	10.25	260	10.25	260
TE-2	100A	100A	600V	J	7.62	194	8.12	206	*	*	5.75	146	10.25	260	10.25	260
TE-3	100A	200A	600V	J	15.12	384	8.12	206	*	*	5.75	146	10.25	260	10.25	260
TF-1	200A	(non)	(non)	--	8.25	210	11.37	289	*	*	*	*	8.87	225	8.87	225
TF-2	200A	200A	250V	H,K,R	14.25	362	11.37	289	*	*	*	*	8.87	225	8.87	225
TF-2	200A	200A	600V	H,K,R	16.75	425	11.37	289	*	*	*	*	8.87	225	8.87	225
TF-2	200A	200A	600V	J	12.87	327	11.37	289	*	*	*	*	8.87	225	8.87	225
TF-3	200A	400A	600V	J	17.25	438	11.37	289	*	*	*	*	8.87	225	8.87	225

Square D † Mechanism for Circuit Breakers	Amp	Circuit Breaker Type	A		B		C (when enclosure depth is:) 8		10		12		16	
in.	mm	in.	mm	in.	mm	in.	mm	in.	mm	in.	mm			
RN-1	100A	FAL,FHL,FCL	6.12	155	4.25	108	3.75	95	6.12	155	10.62	270	10.62	270
RP-1	250A	KAL,KHL,KCL	7.37	187	4.25	108	*	*	6.87	174	11.37	289	11.37	289
RR-1	400A	LAL,LHL,Q4L	12.25	311	4.50	114	*	*	*	*	7.00	178	7.00	178
RR-2	400A	ILL	11.12	282	5.87	149	*	*	*	*	11.37	289	11.37	289

* Do not install disconnects in this depth enclosure.

The dimensional information provided in this table is derived from information supplied by the manufacturer of the equipment to be installed. Fit and function of all equipment should be checked before and after installation to assure proper and safe operation and compliance with the applicable regulations, codes and standards.

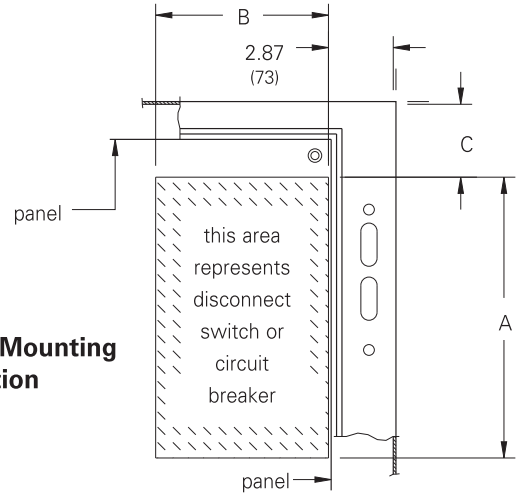

Disconnect Mounting Location

† Marks are the property of their respective owners.

Notes: Dimensions are in inches. Millimeters shown are for reference only. Data subject to change without notice.

Wall-Mount Enclosures

Disconnect Ordering Information

ALLEN-BRADLEY †

Standard enclosure designed to accept variable depth type 1494V / 1494U.

Allen-Bradley† 1494V / 1494U disconnect switch:

1. Disconnect switch and operating mechanism.
2. Operating handle.
3. Trailer fuse block kit, (if required).
4. Fuse clip kit, (if required).
5. Line and load connectors, (if necessary).
6. Door hardware: 2-pt latching mechanism or 3-pt latching mechanism.

Allen-Bradley† 1494V / 1494U circuit breaker:

1. Circuit breaker.
2. Operating mechanism.
3. Operating handle.
4. Door hardware: 2-pt latching mechanism or 3-pt latching mechanism.

CUTLER-HAMMER †

Standard enclosures designed to accept variable depth types C361 and C371.

Cutler-Hammer† C361 disconnect switch:

1. Disconnect switch and operating mechanism.
2. Operating handle.
3. Door hardware: 2-pt latching mechanismor 3-pt latching mechanism.

Cutler-Hammer† C371 circuit breaker:

1. Circuit breaker.
2. Operating mechanism.
3. Operating handle.
4. Door hardware: 2-pt latching mechanism or 3-pt latching mechanism.

GENERAL ELECTRIC †

Standard enclosures designed to accept variable depth type TDA.

General Electric† TDA disconnect switch:

1. Disconnect switch (QMR, QMW) and variable depth operating mechanism.
2. Operating handle.
3. Fuse clip kit or no fuse kit, (if required).
4. Door hardware: 2-pt latching mechanism or 3-pt latching mechanism.

General Electric† TDA circuit breaker:

1. Circuit breaker.
2. Variable depth operating mechanism.
3. Operating handle.
4. Door hardware: 2-pt latching mechanism or 3-pt latching mechanism.

I-T-E SIEMENS †

Standard enclosures designed to accept MAX-FLEX type FHO.

I-T-E Siemens† MAX-FLEX† circuit breaker:

1. Circuit Breaker.
2. Operating mechanism.
3. Operating handle FHOH.
4. Line and load connectors, (if necessary).
5. Operating cable (standard 36 inch).
6. Door hardware: 2-pt latching mechanism or 3-pt latching mechanism.

SQUARE D †

Standard enclosures designed to accept variable depth type 9422.

Square D† 9422 disconnect switch:

1. Disconnect switch and operating mechanism.
2. Operating handle.
3. Door hardware: 2-pt latching mechanism or 3-pt latching mechanism.

Square D† 9422 circuit breaker:

1. Circuit breaker.
2. Operating mechanism.
3. Operating handle.
4. Door hardware: 2-pt latching mechanism or 3-pt latching mechanism.

† Marks are the property of their respective owners.

Important Note

When ordering flange-mounted disconnect equipment be sure to include all the necessary components.

1. Latching bar, latching bar bracket interlock and hardware are furnished with the enclosure.
2. Disconnects and related components are available from the manufacturer, see pages 301 - 306.

Notes: Data subject to change without notice.

Ground-Mount Enclosures
Type 12 Center & Flange-Mount Floor-Standing with 3-Point Locking
Data Sheet

CD606012-12FD

FD606012-12FD

Application
- Houses electrical controls and instruments
- Protects against circulating dust, falling dirt and dripping noncorrosive liquids

Standards
- UL 508A listed, Type 12
- CSA C22.2 No.94 certified, Type 12
- Conforms to NEMA standard for Type 12

Finish
- Wash and phosphate undercoat
- ANSI 61 gray polyester powder finish

Accessories
- Panels
- Channel mounting hardware
- Blank adapter plates
- Operator adapters
- Leg stabilizer kit
- Touch-up paint
- Replacement handles: defeater handle BD-PDHB and keyed handle BD-PKHB (see pages 428 & 429).
- See Accessories section

Discount Schedule: C2

Subclass: DO0

Construction
- Enclosure and door are fabricated from (12) gauge steel
- All continuous welded seams are finished smooth
- Doors are secured to the body with removable concealed hinges and a center locating 3-point key-locking and padlock handle mechanism
- Modern bevel profile on hinge side of enclosure doors
- Right-side door serves as the master door on the flange mount disconnect type with a defeater mechanism which requires a screwdriver to open
- Left-side door serves as the master door on the center post disconnect type with a defeater mechanism which requires a flat screwdriver to open
- Slave doors cannot open without activating mechanical interlock but can close in any order
- Universal opening on either the right side flange or the center post will accommodate most disconnect operators when used with operator adapters, (order separately) see page 451
- Print pocket provided
- Doors have an oil-resistant gasket
- Ground studs provided on doors and body
- Lighting mounting channel provided
- Removable center post allows for easy access and panel installation
- Heavy-gauge angle supports and .375-16 collar studs are provided for optional panel mounting
- Large lifting eyebolts are supplied
- Mounting legs are provided for floor mounting

Discount Schedule: C2

Subclass: DOC

Important Note

When ordering flange or center-mounted disconnect enclosures, be sure to include all the necessary components.

1. A flange or center-mounted enclosure
2. A panel (optional)
3. Operator adapter plates MUST be ordered for the specific brand and type of disconnect being used, (see page 451)

Disconnect switch (or circuit breaker), operating handle and operating mechanism are not furnished with enclosure, see disconnect ordering information, pages 312 - 319.

Notes: We can provide special sizes, finishes and other modifications. Consult the factory for your special requirements

Ground-Mount Enclosures
Type 12 Center & Flange-Mount Floor-Standing with 3-Point Locking
Catalog Number

Center-Mounted

Enclosure	Enclosure Size Height x Width x Depth A x B x C		Panel	Panel Size Height x Width	
Catalog Number	in.	mm	Catalog Number	in.	mm
CD604812-12FD	60.00 x 48.12 x 12.00	1524 x 1222 x 305	AW6048P	55.87 x 43.87	1419 x 1114
CD606012-12FD	60.00 x 60.12 x 12.00	1524 x 1527 x 305	AW6060P	55.87 x 55.87	1419 x 1419
CD726012-12FD	72.00 x 60.12 x 12.00	1829 x 1527 x 305	AW7260P	67.87 x 55.87	1724 x 1419
CD727212-12FD	72.00 x 72.12 x 12.00	1829 x 1832 x 305	AW7272P	67.87 x 67.87	1724 x 1419
CD727218-12FD	72.00 x 72.12 x 18.00	1829 x 1832 x 305	AW7272P	67.87 x 67.87	1724 x 1724

Flange-Mounted

Enclosure	Enclosure Size Height x Width x Depth A x B x C		Panel	Panel Size Height x Width	
Catalog Number	in.	mm	Catalog Number	in.	mm
FD604912-12FD	60.00 x 49.00 x 12.00	1524 x 1245 x 305	AW6048P	55.87 x 43.87	1419 x 1114
FD606112-12FD	60.00 x 61.00 x 12.00	1524 x 1549 x 305	AW6060P	55.87 x 55.87	1419 x 1419
FD726112-12FD	72.00 x 61.00 x 12.00	1829 x 1549 x 305	AW7260P	67.87 x 55.87	1724 x 1419
FD727312-12FD	72.00 x 73.00 x 12.00	1829 x 1854 x 305	AW7272P	67.87 x 67.87	1724 x 1724
FD604918-12FD	60.00 x 49.00 x 18.00	1524 x 1245 x 457	AW6048P	55.87 x 43.87	1419 x 1114
FD606118-12FD	60.00 x 61.00 x 18.00	1524 x 1549 x 457	AW6060P	55.87 x 55.87	1419 x 1419
FD726118-12FD	72.00 x 61.00 x 18.00	1829 x 1549 x 457	AW7260P	67.87 x 55.87	1724 x 1419
FD727318-12FD	72.00 x 73.00 x 18.00	1829 x 1854 x 457	AW7272P	67.87 x 67.87	1724 x 1724
FD727324-12FD	72.00 x 73.00 x 24.00	1829 x 1854 x 610	AW7272P	67.87 x 67.87	1724 x 1724

Notes: Dimensions are in inches. Millimeters shown are for reference only. Data subject to change without notice.

Ground-Mount Enclosures
Type 12 Center & Flange-Mount Floor-Standing with 3-Point Locking
Illustration Sheet

ID = Inside Dimension

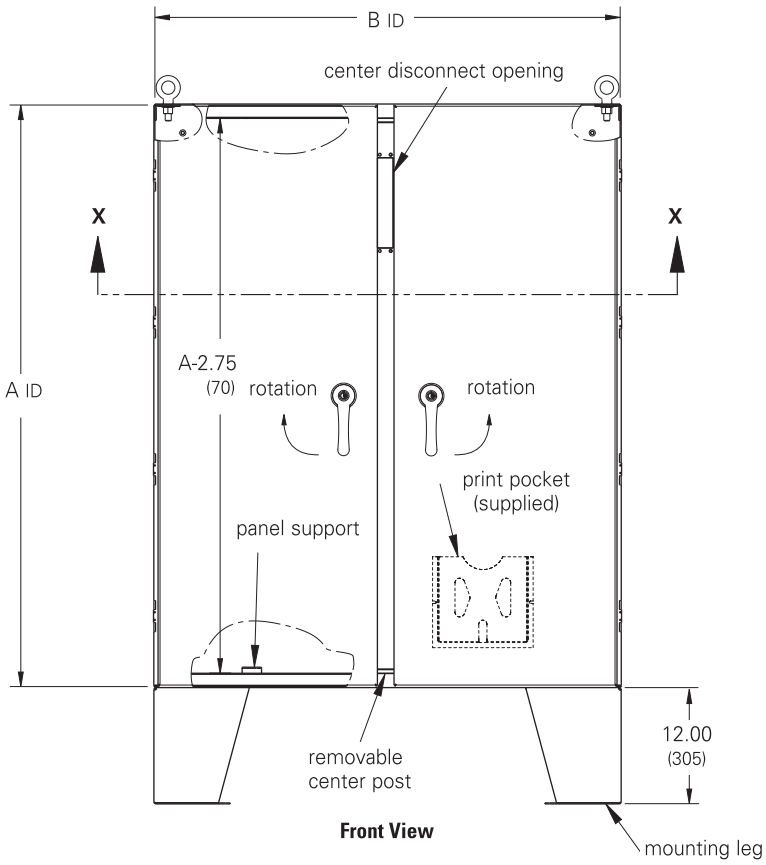

Front View

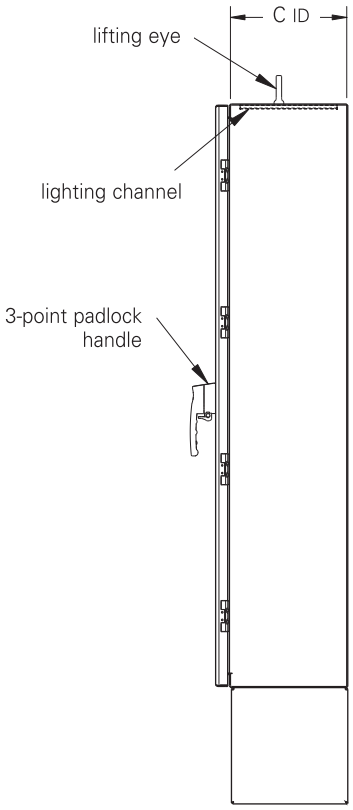

Side View

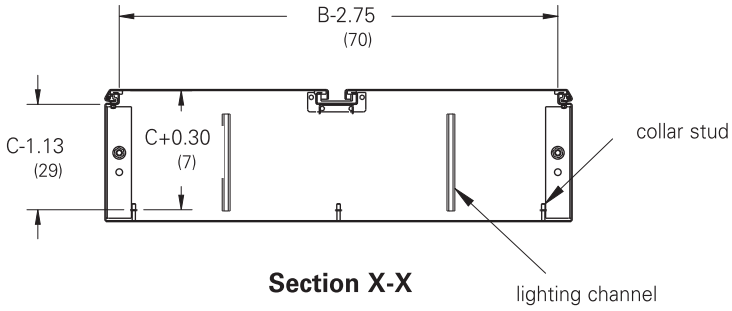

Section X-X

Notes: Dimensions are in inches. Millimeters shown are for reference only. Data subject to change without notice.

Ground-Mount Enclosures
Type 12 Center & Flange-Mount Floor-Standing with 3-Point Locking
Illustration Sheet

ID = Inside Dimension

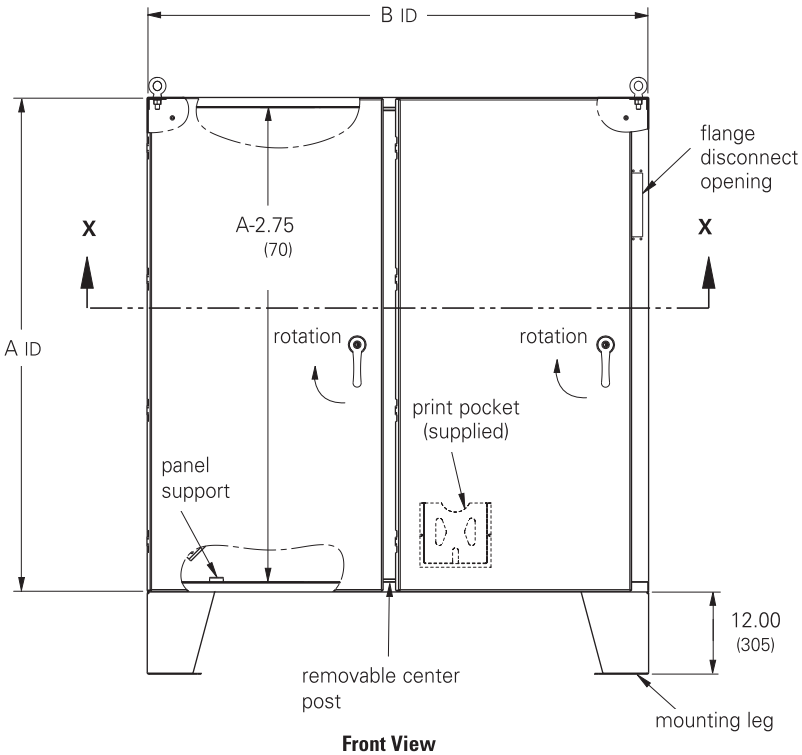

Front View

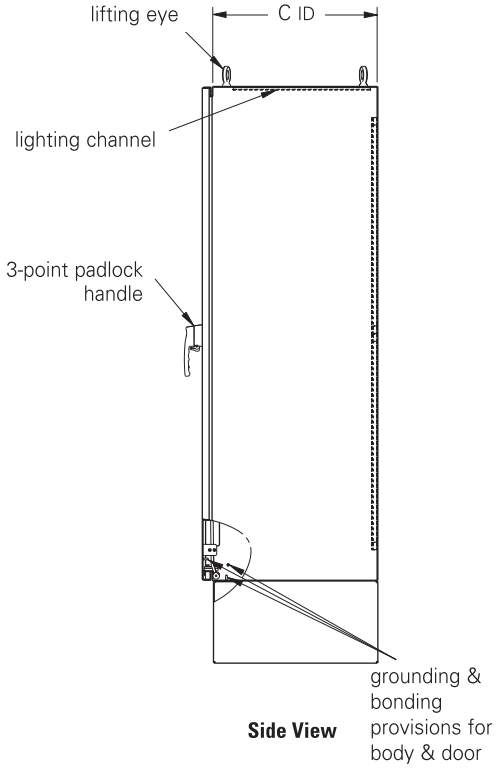

Side View

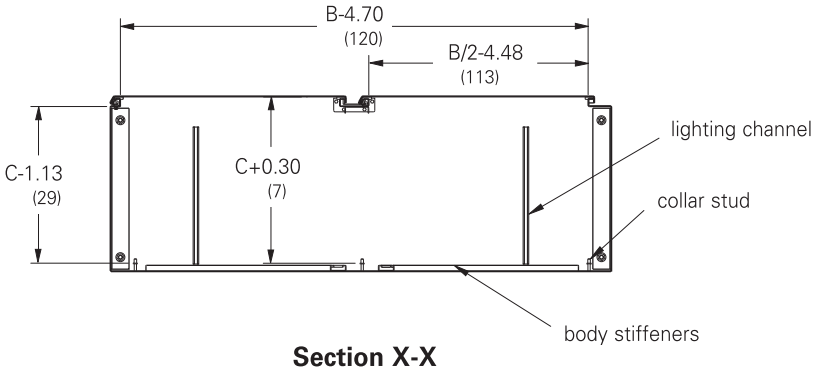

Section X-X

Notes: Dimensions are in inches. Millimeters shown are for reference only. Data subject to change without notice.
Two lifting eyes are furnished when C dimension is 24" (610 mm) or less.

Ground-Mount Enclosures
Type 12 Center & Flange-Mount Floor-Standing with 3-Point Locking
Illustration Sheet

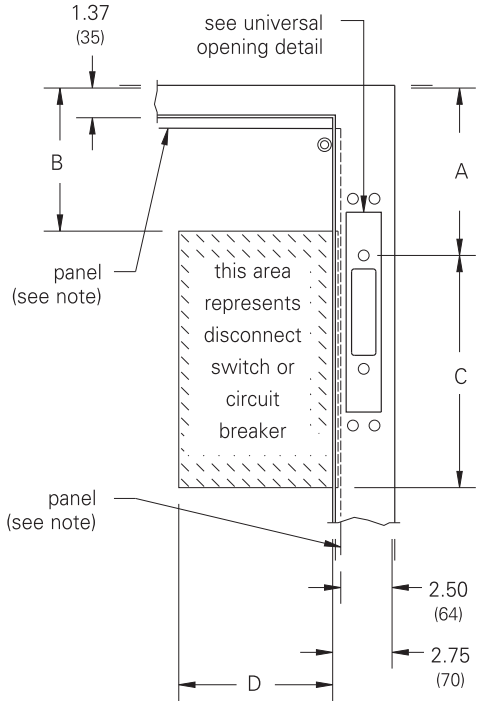

Flange Mounting

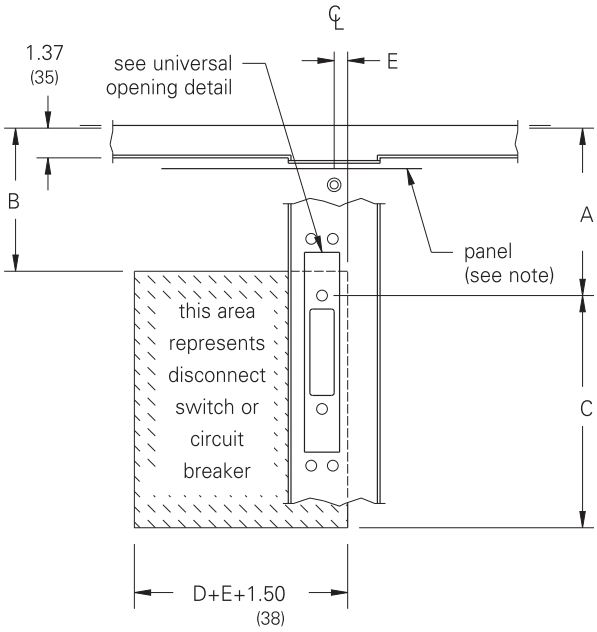

Center Post Mounting

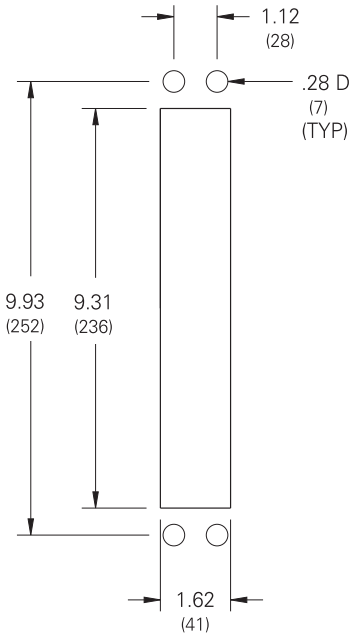

Universal Opening Detail

The dimensional information provided in these drawings is derived from information supplied by the manufacturer of the equipment to be installed. Fit and function of all equipment should be checked before and after installation to assure proper and safe operation and compliance with the applicable regulations, codes and standards.

Universal opening must be filled with an operator adapter kit for the specific brand and type of disconnect being used, (see page 451).

Important Note

When ordering flange or center-mounted disconnect enclosures, be sure to include all the necessary components.

1. A flange or center-mounted enclosure
2. A panel (optional)
3. Operator adapter plates MUST be ordered for the specific brand and type of disconnect being used, (see page 451)

Disconnect switch (or circuit breaker), operating handle and operating mechanism are not furnished with enclosure, see disconnect ordering information, pages 312 - 319.

Notes: Refer to disconnect tables for associated dimensions. Panels are ordered separately. Refer to catalog table for size and ordering information. Dimensions are in inches. Millimeters shown are for reference only. Data subject to change without notice.

Floor-Standing Enclosures

Disconnect Ordering Information

Allen-Bradley® †

1494V or 1494U Disconnect Mechanism

Allen-Bradley† Mechanism for Switches	Amp	Fuse Clip Rating		Fuse Class	Enclosure Height								C		D(1)		E	
					60				72									
					A		B		A		B							
		Amp	Volt		in.	mm	in.	mm	in.	mm	in.	mm	in.	mm	in.	mm	in	mm
DS30	30A	(non)	(non)	--	7.87	200	6.00	152	13.37	340	11.50	292	4.00	102	6.75	171	.25	6
DS30	30A	30A	250V	H,K,R	7.87	200	6.00	152	13.37	340	11.50	292	5.25	133	6.75	171	.25	6
DS30	30A	30A	600V	H,K,R	7.87	200	6.00	152	13.37	340	11.50	292	8.00	203	6.75	171	.25	6
DS30	30A	30A	600V	J	7.87	200	6.00	152	13.37	340	11.50	292	5.25	133	6.75	171	.25	6
DS30	30A	60A	250V	H,K	7.87	200	6.00	152	13.37	340	11.50	292	6.00	152	6.75	171	.25	6
DS30	30A	60A	600V	H,K	7.87	200	6.00	152	13.37	340	11.50	292	8.50	216	6.75	171	.25	6
DS30	30A	60A	600V	J	7.87	200	6.00	152	13.37	340	11.50	292	5.50	140	6.75	171	.25	6
DS60	60A	(non)	(non)	--	7.87	200	5.87	149	13.37	340	11.37	289	4.00	102	6.75	171	.25	6
DS60	60A	30A	600V	H,K,R	7.87	200	5.87	149	13.37	340	11.37	289	8.00	203	6.75	171	.25	6
DS60	60A	60A	250V	H,K,R	7.87	200	5.87	149	13.37	340	11.37	289	6.00	152	6.75	171	.25	6
DS60	60A	60A	600V	H,K,R	7.87	200	5.87	149	13.37	340	11.37	289	8.50	216	6.75	171	.25	6
DS60	60A	60A	600V	J	7.87	200	5.87	149	13.37	340	11.37	289	5.50	140	6.75	171	.25	6
DS60	60A	100A	250V	H,K	7.87	200	5.87	149	13.37	340	11.37	289	8.50	216	6.75	171	.25	6
DS60	60A	100A	600V	H,K	7.87	200	5.87	149	13.37	340	11.37	289	10.50	267	6.75	171	.25	6
DS60	60A	100A	600V	J	7.87	200	5.87	149	13.37	340	11.37	289	7.25	184	6.75	171	.25	6
DS100	100A	(non)	(non)	--	7.87	200	4.37	111	13.37	340	9.87	251	4.75	121	8.00	203	.25	6
DS100	100A	100A	250V	H,K,R	7.87	200	4.37	111	13.37	340	9.87	251	10.50	267	8.00	203	.25	6
DS100	100A	100A	600V	H,K,R	7.87	200	4.37	111	13.37	340	9.87	251	12.50	318	8.00	203	.25	6
DS100	100A	100A	600V	J	7.87	200	4.37	111	13.37	340	9.87	251	9.25	235	8.00	203	.25	6
DS100	100A	200A	250V	H,K	7.87	200	4.37	111	13.37	340	9.87	251	11.25	286	8.00	203	.25	6
DS100	100A	200A	600V	H,K	7.87	200	4.37	111	13.37	340	9.87	251	13.75	349	8.00	203	.25	6
DS100	100A	200A	600V	J	7.87	200	4.37	111	13.37	340	9.87	251	10.00	254	8.00	203	.25	6
DS200	200A	(non)	(non)	--	*	*	*	*	11.93	303	7.50	191	10.00	254	11.00	279	.25	6
DS200	200A	200A	250V	H,K,R	*	*	*	*	11.93	303	7.50	191	15.00	381	11.00	279	.25	6
DS200	200A	200A	600V	H,K,R	*	*	*	*	11.93	303	7.50	191	17.25	438	11.00	279	.25	6
DS200	200A	200A	600V	J	*	*	*	*	11.93	303	7.50	191	13.50	343	11.00	279	.25	6
DS200	200A	400A	250V	H,K	*	*	*	*	11.93	303	7.50	191	15.75	400	11.00	279	.25	6
DS200	200A	400A	600V	H,K	*	*	*	*	11.93	303	7.50	191	18.75	476	11.00	279	.25	6
DS200	200A	400A	600V	J	*	*	*	*	11.93	303	7.50	191	14.25	362	11.00	279	.25	6

Allen-Bradley† Mechanism for Circuit Breakers	Amp	Circuit Breaker Type		Enclosure Height								C		D(1)		E	
				60				72									
				A		B		A		B							
		Manufacturer	Frame(s)	in.	mm	in.	mm	in.	mm	in.	mm	in.	mm	in.	mm	in	mm
M40	150A	General Electric	TED,THED,TEC	7.87	200	7.25	184	13.37	340	12.75	324	5.75	146	4.75	121	.25	6
M40	150A	Westinghouse	F (series C)	7.87	200	7.25	184	13.37	340	12.75	324	5.00	127	4.75	121	.25	6
M50	250A	Westinghouse	J (series C)	7.87	200	6.87	174	13.37	340	12.37	324	9.75	248	5.00	127	.25	6
M60	400A	Westinghouse	K (series C)	*	*	*	*	13.37	340	12.37	324	9.75	248	6.25	159	.25	6

* Do not install disconnects in this height enclosure.

(1) Dimension "D" does not include space for auxiliary switches.

The dimensional information provided in this table is derived from information supplied by the manufacturer of the equipment to be installed. Fit and function of all equipment should be checked before and after installation to assure proper and safe operation and compliance with the applicable regulations, codes and standards.

† Marks are the property of their respective owners.

Notes: Dimensions are in inches. Millimeters shown are for reference only. Data subject to change without notice.

Floor-Standing Enclosures

Disconnect Ordering Information

Allen-Bradley® †

1494F Disconnect Mechanism

Allen-Bradley† Mechanism Switches	Amp	Fuse Clip Rating		Fuse Class	Enclosure Height								C		D(1)		E	
					60				72									
					A		B		A		B							
		Amp	Volt		in.	mm	in.	mm	in.	mm	in.	mm	in.	mm	in.	mm	in	mm
N30	30A	(non)	(non)	--	5.87	149	5.37	136	11.37	289	10.87	276	4.75	121	6.50	165	.75	19
NF30	30A	30A	250V	H,K,R	5.87	149	5.37	136	11.37	289	10.87	276	6.50	165	6.50	165	.75	19
NF30	30A	30A	600V	H,K,R	5.87	149	5.37	136	11.37	289	10.87	276	9.25	235	6.50	165	.75	19
NF30	30A	30A	600V	J	5.87	149	5.37	136	11.37	289	10.87	276	6.50	165	6.50	165	.75	19
NF30	30A	60A	250V	H,K,R	5.87	149	5.37	136	11.37	289	10.87	276	7.25	184	6.50	165	.75	19
NF30	30A	60A	600V	H,K,R	5.87	149	5.37	136	11.37	289	10.87	276	9.75	248	6.50	165	.75	19
NF30	30A	60A	600V	J	5.87	149	5.37	136	11.37	289	10.87	276	6.75	171	6.50	165	.75	19
N60	60A	(non)	(non)	--	5.87	149	4.62	117	11.37	289	10.12	257	4.75	121	6.50	165	.75	19
NF60	60A	30A	600V	H,K,R	5.87	149	4.62	117	11.37	289	10.12	257	10.50	267	6.50	165	.75	19
NF60	60A	60A	250V	H,K,R	5.87	149	4.62	117	11.37	289	10.12	257	8.50	216	6.50	165	.75	19
NF60	60A	60A	600V	H,K,R	5.87	149	4.62	117	11.37	289	10.12	257	11.00	279	6.50	165	.75	19
NF60	60A	60A	600V	J	5.87	149	4.62	117	11.37	289	10.12	257	7.75	197	6.50	165	.75	19
NF60	60A	100A	250V	H,K,R	5.87	149	4.62	117	11.37	289	10.12	257	11.00	279	6.50	165	.75	19
NF60	60A	100A	600V	H,K,R	5.87	149	4.62	117	11.37	289	10.12	257	13.00	330	6.50	165	.75	19
NF60	60A	100A	600V	J	5.87	149	4.62	117	11.37	289	10.12	257	9.75	248	6.50	165	.75	19
N100	100A	(non)	(non)	--	*	*	*	*	11.37	289	8.25	210	4.75	121	7.25	184	.75	19
NF100	100A	100A	250V	H,K,R	*	*	*	*	11.37	289	8.25	210	11.50	292	7.50	191	.75	19
NF100	100A	100A	600V	H,K,R	*	*	*	*	11.37	289	8.25	210	13.50	343	7.50	191	.75	19
NF100	100A	100A	600V	J	*	*	*	*	11.37	289	8.25	210	10.25	260	7.50	191	.75	19
NF100	100A	200A	250V	H,K,R	*	*	*	*	11.37	289	8.25	210	12.25	311	7.75	197	.75	19
NF100	100A	200A	600V	H,K,R	*	*	*	*	11.37	289	8.25	210	14.75	375	7.75	197	.75	19
NF100	100A	200A	600V	J	*	*	*	*	11.37	289	8.25	210	11.00	279	7.75	197	.75	19
N200	200A	(non)	(non)	--	*	*	*	*	10.06	256	6.62	210	7.25	184	10.50	267	.75	19
NF200	200A	200A	250V	H,K,R	*	*	*	*	10.06	256	6.62	168	15.00	381	10.50	267	.75	19
NF200	200A	200A	600V	H,K,R	*	*	*	*	10.06	256	6.62	168	17.50	445	10.50	267	.75	19
NF200	200A	200A	600V	J	*	*	*	*	10.06	256	6.62	168	13.75	349	10.50	267	.75	19
NF200	200A	400A	250V	H,K,R	*	*	*	*	10.06	256	6.62	168	16.50	419	11.00	279	.75	19
NF200	200A	400A	600V	H,K,R	*	*	*	*	10.06	256	6.62	168	19.50	495	11.00	279	.75	19
NF200	200A	400A	600V	J	*	*	*	*	10.06	256	6.62	168	15.00	381	11.00	279	.75	19

1494D Disconnect Mechanism

Allen-Bradley† Mechanism for Circuit Breakers	Amp	Circuit Breaker Type		Enclosure Height								C		D(1)		E	
				60				72									
				A		B		A		B							
		Manufacturer	Frame(s)	in.	mm	in.	mm	in.	mm	in.	mm	in.	mm	in.	mm	in	mm
N4/N40	150A	General Electric	TED,THED,TEC	5.87	149	5.25	133	11.37	289	10.75	273	5.87	149	4.62	117	.75	19
N5/N55	225A	General Electric	TFK,THFK,TFC	5.87	149	4.50	114	11.37	289	10.00	254	8.87	225	4.75	121	.75	19
N4/N40	150A	Westinghouse	F (series C)	5.87	149	5.25	133	11.37	289	10.75	273	5.87	149	4.62	117	.75	19
N5/N50	250A	Westinghouse	J (series C)	5.87	149	4.50	114	11.37	289	10.00	254	8.87	225	4.75	121	.75	19
N5/N60	400A	Westinghouse	K (series C)	*	*	*	*	11.37	289	10.00	254	8.87	225	5.87	149	.75	19

* Do not install disconnects in this height enclosure.

(1) Dimension "D" does not include space for auxiliary switches.

The dimensional information provided in this table is derived from information supplied by the manufacturer of the equipment to be installed. Fit and function of all equipment should be checked before and after installation to assure proper and safe operation and compliance with the applicable regulations, codes and standards.

† Marks are the property of their respective owners.

Notes: Dimensions are in inches. Millimeters shown are for reference only. Data subject to change without notice.

Floor-Standing Enclosures

Disconnect Ordering Information

Cutler-Hammer †

C361 Disconnect Mechanism

Cutler-Hammer† Mechanism Switches	Amp	Fuse Clip Rating		Fuse Class	Enclosure Height								C		D		E	
					60				72									
					A		B		A		B							
		Amp	Volt		in.	mm	in.	mm	in.	mm	in.	mm	in.	mm	in.	mm	in	mm
NC	30A	(non)	(non)	--	7.87	200	6.50	165	13.37	340	12.00	305	4.75	121	6.25	1588	.25	6
SC21	30A	30A	250V	H,K,R	7.87	200	6.50	165	13.37	340	12.00	305	7.75	197	6.25	1588	.25	6
SC61	30A	30A	600V	H,K,R	7.87	200	6.50	165	13.37	340	12.00	305	7.75	197	6.25	1588	.25	6
SC61	30A	30A	600V	J	7.87	200	6.50	165	13.37	340	12.00	305	7.75	197	6.25	1588	.25	6
SC61	30A	60A	250V	H,K,R	7.87	200	6.50	165	13.37	340	12.00	305	8.25	210	6.25	1588	.25	6
ND	60A	(non)	(non)	--	7.87	200	6.50	165	13.37	340	12.00	305	4.75	121	6.25	1588	.25	6
SD22	60A	30A	600V	J	7.87	200	6.50	165	13.37	340	12.00	305	7.75	197	6.25	1588	.25	6
SD22	60A	60A	250V	H,K,R	7.87	200	6.50	165	13.37	340	12.00	305	8.25	210	6.25	1588	.25	6
SD62	60A	60A	600V	H,K,R	7.87	200	6.50	165	13.37	340	12.00	305	8.25	210	6.25	1588	.25	6
SD62	60A	60A	600V	J	7.87	200	6.50	165	13.37	340	12.00	305	8.00	203	6.25	1588	.25	6
NE	100A	(non)	(non)	--	7.87	200	6.12	155	13.37	340	11.62	295	4.25	108	7.50	191	.25	6
SE263	100A	100A	250V	H,K,R	7.87	200	6.12	155	13.37	340	11.62	295	9.00	229	7.50	191	.25	6
SE263	100A	100A	600V	H,K,R	7.87	200	6.12	155	13.37	340	11.62	295	9.00	229	7.50	191	.25	6
SE263	100A	100A	600V	J	7.87	200	6.12	155	13.37	340	11.62	295	7.75	197	7.50	191	.25	6
NF (1)	200A	(non)	(non)	--	7.87	200	4.12	155	13.37	340	9.62	295	13.25	337	10.25	260	.25	6
SF264 (1)	200A	200A	250V	H,K,R	7.87	200	4.12	155	13.37	340	9.62	295	13.25	337	10.25	260	.25	6
SF264 (1)	200A	200A	600V	H,K,R	7.87	200	4.12	155	13.37	340	9.62	295	13.25	337	10.25	260	.25	6
SF264 (1)	200A	200A	600V	J	7.87	200	4.12	155	13.37	340	9.62	295	13.25	337	10.25	260	.25	6

C371 Disconnect Mechanism

Cutler-Hammer† Mechanism for Circuit Breakers	Amp	Circuit Breaker Type		Enclosure Height								C		D		E	
				60				72									
				A		B		A		B							
		Manufacturer	Frame(s)	in.	mm	in.	mm	in.	mm	in.	mm	in.	mm	in.	mm	in	mm
C371E	150A	Cutler-Hammer	HMCP,FS,FH	7.87	200	7.62	194	13.37	340	13.12	333	6.00	152	5.75	146	.25	6
C371F (1)	225A	Cutler-Hammer	HMCP,JS,JH,JL	7.87	200	7.50	191	13.37	340	13.00	330	11.00	279	8.25	210	.25	6
C371F (1)	400A	Cutler-Hammer	HMCP,KS,KH	7.87	200	7.00	178	13.37	340	12.50	318	9.75	248	8.25	210	.25	6
C371G (1)	600A	Cutler-Hammer	LS,LH	*	*	*	*	13.37	340	10.87	276	8.50	216	12.00	305	.25	6
C371E	150A	Westinghouse	F (series C)	7.87	200	7.62	194	13.37	340	13.12	333	6.00	152	5.75	146	.25	6
C371F (1)	250A	Westinghouse	J (series C)	7.87	200	7.50	191	13.37	340	13.00	330	9.00	229	8.25	210	.25	6
C371F (1)	400A	Westinghouse	K (series C)	7.87	200	7.00	178	13.37	340	12.50	318	9.75	248	8.25	210	.25	6
C371G (1)	600A	Westinghouse	LA,LC	*	*	*	*	13.37	340	10.87	276	8.50	216	12.00	305	.25	6

* Do not install disconnects in this height enclosure.

(1) Wire bending space "B" does not allow the maximum size cable in 60H enclosures.

(2) Wire bending space "B" does not allow the maximum size cable in 72H enclosures.

The dimensional information provided in this table is derived from information supplied by the manufacturer of the equipment to be installed. Fit and function of all equipment should be checked before and after installation to assure proper and safe operation and compliance with the applicable regulations, codes and standards.

† Marks are the property of their respective owners.

Notes: Dimensions are in inches. Millimeters shown are for reference only. Data subject to change without notice.

Floor-Standing Enclosures

Disconnect Ordering Information

General Electric® †

TDA Disconnect Mechanism

General Electric† Mechanism for Switches	Amp	Fuse Clip Rating		Fuse Class	Enclosure Height								C		D		E	
					60				72									
					A		B		A		B							
		Amp	Volt		in.	mm	in.	mm	in.	mm	in.	mm	in.	mm	in.	mm	in	mm
TDOM1A	30A	(non)	(non)	--	7.87	200	8.37	213	13.37	340	13.87	340	7.00	178	5.50	140	.25	6
TDOM1A	30A	30A	250V	H,R	7.87	200	8.37	213	13.37	340	13.87	340	7.00	178	5.50	140	.25	6
TDOM1B	30A	30A	600V	H,R	7.87	200	8.37	213	13.37	340	13.87	340	11.50	292	5.50	140	.25	6
TDOM1B	30A	60A	250V	H,R	7.87	200	8.37	213	13.37	340	13.87	340	11.50	292	5.50	140	.25	6
TDOM1B	30A	60A	600V	H,R	7.87	200	8.37	213	13.37	340	13.87	340	11.50	292	5.50	140	.25	6
TDOM1A	60A	(non)	(non)	--	7.87	200	8.37	213	13.37	340	13.87	340	7.00	178	5.50	140	.25	6
TDOM1B	60A	60A	250V	H,R	7.87	200	8.37	213	13.37	340	13.87	340	11.50	292	5.50	140	.25	6
TDOM1B	60A	60A	600V	H,R	7.87	200	8.37	213	13.37	340	13.87	340	11.50	292	5.50	140	.25	6
TDOM1B	60A	100A	250V	H,R	7.87	200	8.37	213	13.37	340	13.87	340	11.50	292	5.50	140	.25	6
TDOM1B	60A	100A	600V	H,R	7.87	200	8.37	213	13.37	340	13.87	340	11.50	292	5.50	140	.25	6
TDOM1A	100A	(non)	(non)	--	7.87	200	8.37	213	13.37	340	13.87	340	7.00	178	5.50	140	.25	6
TDOM1B	100A	100A	250V	H,R	7.87	200	8.37	213	13.37	340	13.87	340	11.50	292	5.50	140	.25	6
TDOM1B	100A	100A	600V	H,R	7.87	200	8.37	213	13.37	340	13.87	340	11.50	292	5.50	140	.25	6
TDOM1B	100A	200A	250V	H,R	7.87	200	8.37	213	13.37	340	13.87	340	11.50	292	5.50	140	.25	6
TDOM1B	100A	200A	600V	H,R	7.87	200	8.37	213	13.37	340	13.87	340	11.50	292	5.50	140	.25	6
TDOM2	200A	(non)	(non)	--	7.87	200	5.75	146	13.37	340	11.25	286	7.00	178	9.25	235	.25	6
TDOM2	200A	200A	250V	H,R	7.87	200	5.75	146	13.37	340	11.25	286	15.50	394	9.25	235	.25	6
TDOM2	200A	200A	600V	H,R	7.87	200	5.75	146	13.37	340	11.25	286	15.50	394	9.25	235	.25	6

General Electric† Mechanism for Circuit Breakers	Amp	Circuit Breaker Type	Enclosure Height								C		D		E	
			60				72									
			A		B		A		B							
			in.	mm	in.	mm	in.	mm	in.	mm	in.	mm	in.	mm	in	mm
TDOM1A	150A	TEB,TEC,TED,THED	7.87	200	7.25	184	13.37	340	12.75	324	7.00	178	5.50	140	.25	6
TDOM1B	150A	TB1,TEC,TECL	7.87	200	7.25	184	13.37	340	12.75	324	11.50	292	5.50	140	.25	6
TDOM1C	150A	TEL	7.87	200	7.25	184	13.37	340	12.75	324	7.00	178	5.50	140	.25	6
TDOM1D	150A	THCL1	7.87	200	5.87	149	13.37	340	11.37	289	7.00	178	5.50	140	.25	6
TDOM3	225A	TFJ,TFK,THFK,TFL	7.87	200	6.87	174	13.37	340	12.37	314	10.50	267	6.00	152	.25	6
TDOM4	400A	TJJ,TJK4,THJK4,TJL4V	*	*	*	*	13.37	340	11.50	292	8.25	210	9.50	241	.25	6
TDOM4	600A	TJK6,THJK6,TJ4V,TJL4V	*	*	*	*	13.37	340	11.50	292	8.25	210	9.50	241	.25	6
TDOM5	400A	TB4,TJH6S	*	*	*	*	13.37	340	11.50	292	14.25	362	9.50	241	.25	6
TDOM6	225A	TLB2,THLC2	*	*	*	*	13.37	340	10.87	276	11.75	298	9.50	241	.25	6
TDOM6	400A	TLB4,THLC4	*	*	*	*	13.37	340	9.50	241	11.75	298	9.50	241	.25	6

* Do not install disconnects in this height enclosure.

The dimensional information provided in this table is derived from information supplied by the manufacturer of the equipment to be installed. Fit and function of all equipment should be checked before and after installation to assure proper and safe operation and compliance with the applicable regulations, codes and standards.

† Marks are the property of their respective owners.

Notes: Dimensions are in inches. Millimeters shown are for reference only. Data subject to change without notice.

Floor-Standing Enclosures

Disconnect Ordering Information

I-T-E Siemens® †

MAX-FLEX † Disconnects

Enclosure	Cable	I-T-E† Mechanism Circuit Breakers	Circuit Breaker Frame	Amp	Device Height		Enclosure Height A 60		Enclosure Height A 72		C(1) nom		C(1) min		C(1) max		D(2) min		D(2) max	
					in.	mm	in.	mm	in.	mm	in.	mm	in.	mm	in.	mm	in.	mm	in.	mm
12	36	FHOE036	ED	125A	6.37	162	7.87	200	13.37	340	5.37	136	-5.37	-136	15.43	392	3.00	76	14.00	356
	36	FHOE036	CED	125A	9.62	244	7.87	200	13.37	340	8.50	216	-2.00	-51	18.75	476	3.00	76	14.00	356
	36	FHOF036	FD	250A	9.50	241	7.87	200	13.37	340	5.62	143	-5.00	-127	15.75	400	4.50	114	12.50	318
	36	FHOF036	CFD	250A	14.12	349	7.87	200	13.37	340	10.25	260	-.25	-6	20.50	521	4.50	114	12.50	318
	36	FHOJ036	JD,LD	400A, 600A	11.00	279	7.87	200	13.37	340	5.25	133	-5.43	-138	15.37	390	7.50	191	14.00	356
	36	FHOJ036	CJD	400A, 600A	17.87	454	7.87	200	13.37	340	12.12	308	1.50	38	22.25	565	7.50	191	14.00	356
18	36	FHOE036	ED	125A	6.37	162	7.87	200	13.37	340	5.37	136	-2.75	-70	13.50	343	3.00	76	9.75	248
	36	FHOE036	CED	125A	9.62	244	7.87	200	13.37	340	8.50	216	.62	16	16.87	428	3.00	76	9.75	248
	36	FHOF036	FD	250A	9.50	241	7.87	200	13.37	340	5.62	143	2.43	62	13.87	352	4.50	114	8.50	216
	36	FHOF036	CFD	250A	14.12	359	7.87	200	13.37	340	10.25	260	7.25	39	18.62	473	4.50	114	8.50	216
	36	FHOJ036	JD,LD	400A, 600A	11.00	279	7.87	200	13.37	340	5.25	133	-2.87	-73	13.43	341	7.50	191	10.12	257
	36	FHOJ036	CJD	400A, 600A	17.87	454	7.87	200	13.37	340	12.12	308	4.12	105	20.37	517	7.50	191	10.12	257
12	48	*	ED	125A	6.37	162	7.87	200	13.37	340	5.37	136	-16.37	-416	27.50	699	3.00	76	26.37	670
	48	*	CED	125A	9.62	244	7.87	200	13.37	340	8.50	216	-13.00	-330	30.87	784	3.00	76	26.37	670
	48	*	FD	250A	9.50	241	7.87	200	13.37	340	5.62	143	-16.00	-406	27.87	708	4.50	114	24.87	632
	48	*	CFD	250A	14.12	359	7.87	200	13.37	340	10.25	260	-11.25	-286	32.62	829	4.50	114	24.87	632
	48	*	JD,LD	400A, 600A	11.00	279	7.87	200	13.37	340	5.25	133	-16.43	-417	27.43	697	7.50	191	26.37	670
	48	*	CJD	400A, 600A	17.87	454	7.87	200	13.37	340	12.12	308	-9.50	-241	34.37	873	7.50	191	26.37	670
	48	FHON048	MD,ND	800A, 1200A	16.00	406	7.87	200	13.37	340	8.12	206	-6.62	-168	21.93	557	9.00	229	20.50	521
18	48	*	ED	125A	6.37	162	7.87	200	13.37	340	5.37	136	-15.37	-390	26.25	667	3.00	76	24.43	621
	48	*	CED	125A	9.62	244	7.87	200	13.37	340	8.50	216	-12.00	-305	29.50	749	3.00	76	24.43	621
	48	*	FD	250A	9.50	241	7.87	200	13.37	340	5.62	143	-15.00	-381	26.50	673	4.50	114	23.00	584
	48	*	CFD	250A	14.12	359	7.87	200	13.37	340	10.25	260	-10.25	-260	30.37	771	4.50	114	23.00	584
	48	*	JD,LD	400A, 600A	11.00	279	7.87	200	13.37	340	5.25	133	-15.43	-392	26.12	663	7.50	191	24.50	622
	48	*	CJD	400A, 600A	17.87	454	7.87	200	13.37	340	12.12	308	-8.50	-216	33.00	838	7.50	191	24.50	622
	48	FHON048	MD,ND	800A 1200A	16.00	406	7.87	200	13.37	340	8.12	206	-5.12	-130	21.43	544	9.00	229	20.50	521
24	48	*	ED	125A	6.37	162	7.87	200	13.37	340	5.37	136	-13.37	-340	23.25	591	3.00	76	20.62	524
	48	*	CED	125A	9.62	244	7.87	200	13.37	340	8.50	216	-10.00	-254	26.50	673	3.00	76	20.62	524
	48	*	FD	250A	9.50	241	7.87	200	13.37	340	5.62	143	-13.00	-330	23.50	597	4.50	114	19.37	492
	48	*	CFD	250A	14.12	359	7.87	200	13.37	340	10.25	260	-8.25	-210	28.37	721	4.50	114	19.37	492
	48	*	JD,LD	400A, 600A	11.00	279	7.87	200	13.37	340	5.25	133	-13.43	-341	23.12	587	7.50	191	20.93	532
	48	*	CJD	400A, 600A	17.87	454	7.87	200	13.37	340	12.12	308	-6.50	-165	30.00	762	7.50	191	20.93	532
	48	FHON048	MD,ND	800A, 1200A	16.00	406	7.87	200	13.37	340	8.12	206	-3.12	-79	19.93	506	9.00	229	20.50	521

I-T-E SIEMENS®† MAX-FLEX† Disconnect Mechanism

Disconnect Mechanism	Cable Length	Circuit Breaker Types
FHOE036	36	ED2, ED4, ED6, HED4, HED6, ED6ETI
FHOE036	36	CED6, CED6ETI
FHOF036	36	FD6, FXD6, HFD6, FXD6ETI
FHOF036	36	CFD6, CFD6ETI
FHOJ036	36	JD2, JD6, JXD6, HJD6, JXD6ETI, LD6,LXD6, HLD6, LXD6ETI, SHJD6, SLD6,SHLD6
FHOJ036	36	CJD6, CJD6ETI, CLD6, CLD6ETI,SCJD6,SCLD6
FHON048	48	MD6, HMD6, CMD6, MXD6ETI, CMD6ETI, SMD6, SHMD6, SCMD6, ND6, HND6, CND6, SND6, SCND6

* Non-standard mechanism with 48 inch operating cable must be specified.
(1) Flexible operating cable allows disconnect to be mounted within min and max of "C" dimension when "D" is minimum.
(2) Flexible operating cable allows disconnect to be mounted within min and max of "D" dimension when "C" is nominal.

The dimensional information provided in this table is derived from information supplied by the manufacturer of the equipment to be installed. Fit and function of all equipment should be checked before and after installation to assure proper and safe operation and compliance with the applicable regulations, codes and standards.

† Marks are the property of their respective owners.

Notes: Refer to detail sheet for drawing information and associated dimensions.
Flexible cable allows for variable disconnect mounting and adequate wire bending space must be maintained.
Dimensions are in inches. Millimeters shown are for reference only. Data subject to change without notice.

Floor-Standing Enclosures

Disconnect Ordering Information

Square D® †

9422 Disconnect Mechanism

Square D† Mechanism for Switches	Amp	Fuse Clip Rating		Fuse Class	Enclosure Height								C		D		E	
					60				72									
					A		B		A		B							
		Amp	Volt		in.	mm	in.	mm	in.	mm	in.	mm	in.	mm	in.	mm	in	mm
RC-1	30A	(non)	(non)	--	7.87	200	7.75	197	13.37	340	13.18	335	3.25	83	7.25	184	.25	6
RC-2	30A	30A	250V	H,K,R	7.87	200	7.75	197	13.37	340	13.18	335	5.00	127	7.25	184	.25	6
RC-3	30A	30A	600V	H,K,R	7.87	200	7.75	197	13.37	340	13.18	335	8.00	203	7.25	184	.25	6
RC-3	30A	30A	600V	J	7.87	200	7.75	197	13.37	340	13.18	335	5.00	127	7.25	184	.25	6
RC-3	30A	60A	250V	H,K,R	7.87	200	7.75	197	13.37	340	13.18	335	6.00	152	7.25	184	.25	6
TC-1	30A	(non)	(non)	--	7.87	200	5.87	149	13.37	340	11.37	289	5.75	146	6.25	159	.25	6
TC-2	30A	30A	250V	H,K,R	7.87	200	5.87	149	13.37	340	11.37	289	5.75	146	6.25	159	.25	6
TC-3	30A	30A	600V	H,K,R	7.87	200	5.87	149	13.37	340	11.37	289	7.75	197	6.25	159	.25	6
TC-3	30A	30A	600V	J	7.87	200	5.87	149	13.37	340	11.37	289	5.75	146	6.25	159	.25	6
TC-3	30A	60A	250V	H,K,R	7.87	200	5.87	149	13.37	340	11.37	289	6.00	152	6.25	159	.25	6
TD-1	60A	(non)	(non)	--	7.87	200	6.75	171	13.37	340	12.25	311	6.50	165	6.75	171	.25	6
TD-2	60A	30A	600V	H,K,R	7.87	200	6.75	171	13.37	340	12.25	311	8.50	216	6.75	171	.25	6
TD-2	60A	60A	250V	H,K,R	7.87	200	6.75	171	13.37	340	12.25	311	6.50	165	6.75	171	.25	6
TD-3	60A	60A	600V	H,K,R	7.87	200	6.75	171	13.37	340	12.25	311	9.00	229	6.75	171	.25	6
TD-3	60A	60A	600V	J	7.87	200	6.75	171	13.37	340	12.25	311	6.50	165	6.75	171	.25	6
TE-1	100A	(non)	(non)	--	7.87	200	6.50	165	13.37	340	12.00	305	4.75	121	8.50	216	.25	6
TE-2	100A	100A	250V	H,K,R	7.87	200	6.50	165	13.37	340	12.00	305	7.50	191	8.50	216	.25	6
TE-2	100A	100A	600V	H,K,R	7.87	200	6.50	165	13.37	340	12.00	305	9.50	241	8.50	216	.25	6
TE-2	100A	100A	600V	J	7.87	200	6.50	165	13.37	340	12.00	305	6.25	159	8.50	216	.25	6
TE-3	100A	200A	600V	J	7.87	200	6.50	165	13.37	340	12.00	305	13.75	349	8.50	216	.25	6
TF-1	200A	(non)	(non)	--	7.87	200	5.12	130	13.37	340	10.62	270	5.50	140	11.75	298	.25	6
TF-2	200A	200A	250V	H,K,R	7.87	200	5.12	130	13.37	340	10.62	270	11.50	292	11.75	298	.25	6
TF-2	200A	200A	600V	H,K,R	7.87	200	5.12	130	13.37	340	10.62	270	14.00	356	11.75	298	.25	6
TF-2	200A	200A	600V	J	7.87	200	5.12	130	13.37	340	10.62	270	10.25	260	11.75	298	.25	6
TF-3	200A	400A	600V	J	7.87	200	5.15	131	13.37	340	10.62	270	14.50	368	11.75	298	.25	6

Square D† Mechanism for Circuit Breakers	Amp	Circuit Breaker Type	Enclosure Height								C		D		E	
			60				72									
			A		B		A		B							
			in.	mm	in.	mm	in.	mm	in.	mm	in.	mm	in.	mm	in	mm
RN-1	100A	FAL,FHL,FCL	7.87	200	6.87	174	13.37	340	12.37	314	5.25	133	5.50	140	.25	6
RP-1	250A	KAL,KHL,KCL	7.87	200	6.62	168	13.37	340	13.12	333	7.25	184	5.75	146	.25	6
RR-1	400A	LAL,LHL,Q4L	*	*	*	*	13.37	340	8.75	222	7.75	197	9.00	229	.25	6
RR-2	400A	ILL	*	*	*	*	13.37	340	13.12	333	11.00	279	15.75	400	.25	6

* Do not install disconnects in this height enclosure.

The dimensional information provided in this table is derived from information supplied by the manufacturer of the equipment to be installed. Fit and function of all equipment should be checked before and after installation to assure proper and safe operation and compliance with the applicable regulations, codes and standards.

† Marks are the property of their respective owners.

Notes: Dimensions are in inches. Millimeters shown are for reference only. Data subject to change without notice.

Floor-Standing Enclosures

Disconnect Ordering Information

ALLEN-BRADLEY †

Standard enclosure designed to accept variable depth type 1494V / 1494U.

Allen-Bradley† 1494V / 1494U disconnect switch:

1. Disconnect switch.
2. Operating mechanism.
3. Operating handle.
4. Fuse block kit, (if required).
5. Fuse clip kit, (if required).
6. Line and load connectors, (if necessary).
7. Connecting rod.

Allen-Bradley† 1494V / 1494U circuit breaker:

1. Circuit breaker, (General Electric, Westinghouse).
2. Operating mechanism.
3. Operating handle.
4. Line and load connectors, (if necessary).
5. Connecting rod.

NOTE: Allen-Bradley support kit is recommended when 1494V devices are installed in 72 inch high center mounted enclosures.

Standard enclosures designed to accept fixed depth type 1494F or 1494D.

Allen-Bradley† 1494F disconnect switch:

1. Disconnect switch.
2. Operating mechanism.
3. Operating handle.
4. Fuse block kit, (if required).
5. Fuse clip kit, (if required).
6. Line and load connectors, (if necessary).

Allen-Bradley† 1494D circuit breaker:

1. Circuit breaker.
2. Operating mechanism.
3. Operating handle.
4. Line and load connectors, (if necessary).
5. Slide mechanism.

CUTLER-HAMMER †

Standard enclosures designed to accept variable depth type C361 or C371.

Cutler-Hammer† C361 disconnect switch:

1. Disconnect switch.
2. Operating mechanism.
3 Operating handle.
4. Fuse clip kit, (if required).
5. Line and load connectors, (if necessary).

NOTE: Items 1, 2 and 3 can be ordered as an assembly.

Cutler-Hammer† C371 circuit breaker:

1. Circuit breaker.
2. Operating mechanism.
3. Operating handle.
4. Line and load connectors, (if necessary).

NOTE: Items 2 and 3 can be ordered as an assembly.

GENERAL ELECTRIC †

Standard enclosures designed to accept variable depth type TDA.

General Electric† TDA disconnect switch:

1. Disconnect Switch, (QMR, QMW).
2. Operating mechanism.
3. Operating handle.
4. Fuse clip kit or no-fuse kit, (if required).
5. Line and load connectors, (if necessary).
6. Extended length drive rod, (if required).

NOTE: These items can be ordered as an assembly.

General Electric† TDA circuit breaker:

1. Circuit breaker.
2. Operating mechanism.
3. Operating handle.
4. Line and load connectors, (if necessary).
5. Extended length drive rod, (if required).

NOTE: When TDOM1 and TDOM3 operating mechanism is used on 72 inch high center mounted enclosures a flange stiffener kit TDSR is recommended.

I-T-E SIEMENS †

Standard enclosures designed to accept MAX-FLEX† type FHO.

I-T-E† MAX-FLEX† circuit breaker:

1. Circuit breaker.
2. Operating mechanism.
3. Operating handle.
4. Line and load connectors, (if necessary).
5. Operating cable.

NOTE: Items 2, 3 and 5 can be ordered as an assembly, standard with a 36 inch long operating cable. All 24 inch enclosures require a 48 inch long cable.

† Marks are the property of their respective owners.

Notes: Data subject to change without notice.

Floor-Standing Enclosures
Disconnect Ordering Information

SQUARE D †
Standard enclosures designed to accept variable depth type 9422.

Square D† 9422 disconnect switch:

1. Disconnect switch.
2. Operating mechanism.
3. Operating handle.
4. Fuse Clip kit, (if required).
5. Line and load connectors, (if necessary).
6. Connecting rod.

NOTE: Square D support kit 9422-C1 is recommended when some devices are installed in 72 inch high center mounted enclosures.

Square D† 9422 circuit breaker:

1. Circuit breaker.
2. Operating mechanism.
3. Operating handle.
4. Line and load connectors, (if necessary).
5. Connecting rod.

NOTE: Square D support kit 9422-C1 is recommended when some devices are installed in 72 inch high enclosures.

Important Note

When ordering flange or center mounted disconnect equipment, be sure to include all necessary components listed below.

1. Enclosure includes the following equipment:
   Enclosure door locking handle and rods
   Door interlocking system
   Interlocking connecting rod
   Adjustable bracket, (see note 3)
2. Operator adapter plate, gasket and hardware for the type of disconnect device being used MUST be ordered separately (see page 451)
3. 24 inch deep enclosures include an adjustable bracket for mounting some disconnects:
   Cutler-Hammer† C361 device
   Cutler-Hammer† C371 E and F devices unless long connecting rod C371CS1 is specified
   Cutler-Hammer† C371 G device unless long connecting rod C371CS2 is specified
   General Electric† TDA device extended length rod TDSR is specified
   Square D† 9422 device unless extra long connecting rod 9422-R2 is specified
   Note: Some devices require two rods, consult the device manufacturer (Westinghouse AMT below handle device).
4. Panels are ordered separately.
5. Disconnects and related components are available from the manufacturer.
6. The disconnect ordering information provided is derived from information supplied by the manufacturer of the equipment to be installed. Fit and function of all equipment should be checked before and after installation to assure proper and safe operation and compliance with the applicable regulations, codes and standards.

† Marks are the property of their respective owners.

Notes: Data subject to change without notice.

Ground-Mount Enclosures
Type 12 Heavy-Duty Single & Multi-Door
Flange-Mount Free-Standing with 3-Point Locking
Data Sheet

FD723318-12FS

FD8411718-12FS

FD725318-12FS

Application
- Houses electrical controls and equipment
- Protects against circulating dust, falling dirt and dripping non-corrosive liquids

Standards
- UL 508A listed, Type 12
- CSA C22.2 No.94 certified, Type 12
- Conforms to NEMA standard for Type 12

Finish
- Wash and phosphate undercoat
- ANSI 61 gray polyester powder finish
- Panels have white enamel finish

Accessories
- Channel mounting hardware
- Blank adapter plates
- Operator adapters
- Touch-up paint
- Replacement handles: defeater handle BD-PDHB and keyed kandle BD-PKHB (see pages 428 & 429).
- See Accessories Section

Discount Schedule: C2

Subclass: see pages 321 - 325

Construction
- Enclosure body (10 or 12) gauge (see appropriate charts) and door (12) gauge are fabricated from steel
- All continuous welded seams are finished smooth
- Doors are secured to the body with removable concealed hinges and a center locating 3-point key-locking and padlock handle mechanism
- Modern bevel profile on hinge side of enclosure door(s)
- Right-side door serves as the master door with a defeater mechanism which requires a screwdriver to open
- Slave doors cannot open without activating mechanical interlock but can close in any order
- Universal opening on right-side flange will accommodate most disconnect operators when used with operator adapter, (order separately - see page 451)
- Doors have an oil-resistant gasket
- Ground stud provided on door(s) and body
- Print pocket provided
- Lighting mounting channel provided
- Fixed center posts are supported from the front to back for enclosure rigidity
- Removable center post allows for easy access and panel installation
- Removable panels mounted on .375-16 collar studs and panel supports
- Large lifting eyebolts are supplied

Important Note

When ordering flange-mounted disconnect enclosures, be sure to include all the necessary components.

1. A flange-mounted disconnect enclosure
2. Operator adapter plates MUST be ordered for the specific brand and type of disconnect being used, (see page 451)

Disconnect switch (or circuit breaker), operating handle and operating mechanism are not furnished with enclosure, see disconnect ordering information, pages 326, 332 - 339.

Notes: We can provide special sizes, finishes and other modifications. Consult the factory for your special requirements.

Ground-Mount Enclosures Type 12 Heavy-Duty Single-Door Flange-Mount Free-Standing with 3-Point Locking

Illustration Sheet and Catalog Number Subclass: DOE

Enclosure	Enclosure Size Height x Width x Depth A x B x C		Gauge	Panel Size Height x Width	
Catalog Number	in.	mm		in.	mm
FD722718-12FS	72.00 x 27.50 x 18.00	1829 x 699 x 457	12	60.00 x 21.75	1524 x 552
FD723318-12FS	72.00 x 33.50 x 18.00	1829 x 851 x 457	12	60.00 x 27.75	1524 x 705
FD723918-12FS	72.00 x 39.50 x 18.00	1829 x 1003 x 457	12	60.00 x 33.75	1524 x 857
FD843918-12FS	84.00 x 39.50 x 18.00	2134 x 1003 x 457	12	72.00 x 33.75	1829 x 857
FD903920-12FS	90.00 x 39.50 x 20.00	2286 x 1003 x 508	12	78.00 x 33.75	1981 x 857
FD903924-12FS	90.00 x 39.50 x 24.00	2286 x 1003 x 610	12	78.00 x 33.75	1981 x 857

ID = Inside Dimension

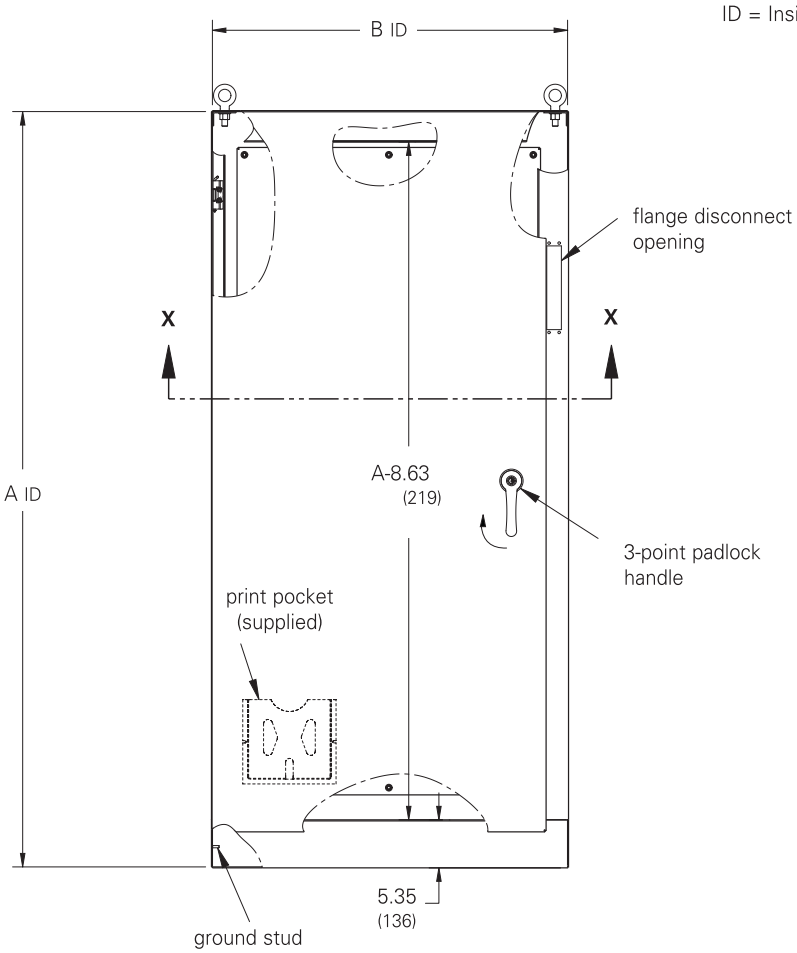

Front View

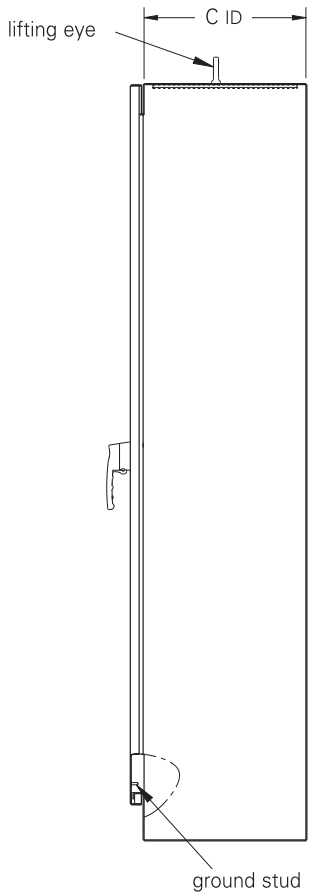

Side View

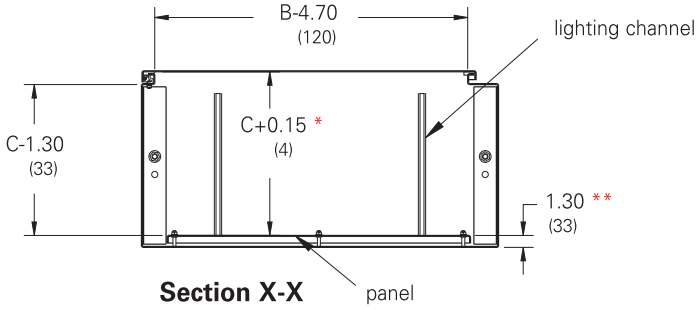

Section X-X

* From inside of door to front of panel

** From front of panel to back inside of enclosure

Notes: Dimensions are in inches. Millimeters shown are for reference only. Data subject to change without notice.
Four lifting eyes are furnished when C dimension is 24" (609 mm) or more.

Ground-Mount Enclosures
Type 12 Heavy-Duty Double-Door
Flange-Mount Free-Standing with 3-Point Locking

Illustration Sheet and Catalog Number
Subclass: DOE

Enclosure	Enclosure Size			Panel Size	
	Height x Width x Depth		Gauge		
	A x B x C			Height x Width	
Catalog Number	in.	mm		in.	mm
FD725318-12FS	72.00 x 53.75 x 18.00	1829 x 1365 x 457	12	60.00 x 48.00	1524 x 1219
FD726518-12FS	72.00 x 65.75 x 18.00	1829 x 1670 x 457	12	60.00 x 60.00	1524 x 1524
FD727718-12FS	72.00 x 77.75 x 18.00	1829 x 1975 x 457	12	60.00 x 72.00	1524 x 1829
FD727724-12FS	72.00 x 77.75 x 24.00	1829 x 1975 x 610	12	60.00 x 72.00	1524 x 1829
FD847718-12FS	84.00 x 77.75 x 18.00	2134 x 1975 x 457	12	72.00 x 72.00	1829 x 1829
FD907720-12FS	90.00 x 77.75 x 20.00	2286 x 1975 x 508	12	78.00 x 72.00	1981 x 1829
FD907724-12FS	90.00 x 77.75 x 24.00	2286 x 1975 x 610	12	78.00 x 72.00	1981 x 1829

ID = Inside Dimension

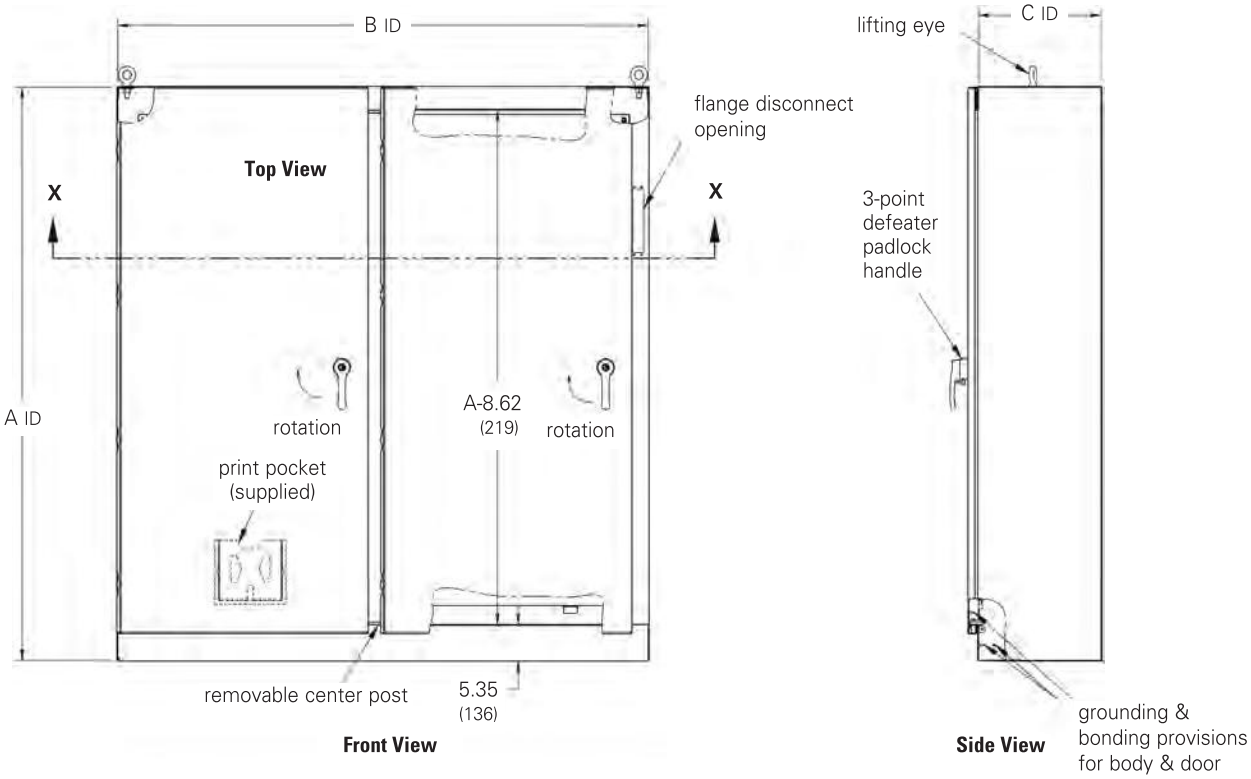

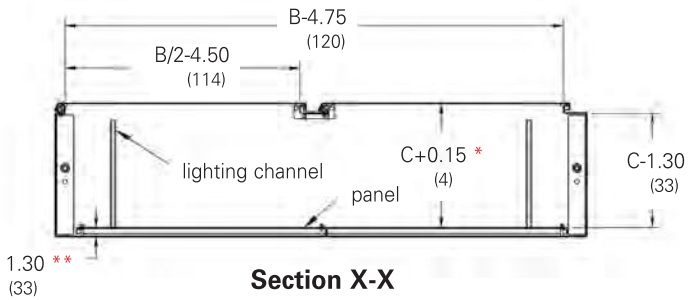

* From inside of door to front of panel

** From front of panel to back inside of enclosure

Notes: Dimensions are in inches. Millimeters shown are for reference only. Data subject to change without notice.
Four lifting eyes are furnished when C dimension is 24" (609 mm) or more.

Ground-Mount Enclosures
Type 12 Heavy-Duty Three-Door
Flange-Mount Free-Standing with 3-Point Locking
Illustration Sheet and Catalog Number
Subclass: DOF

Enclosure Catalog Number	Enclosure Size Height x Width x Depth A x B x C in.	mm	D in.	mm	E in.	mm	Gauge	Panel A Size Height x Width in.	mm	Panel B Size Height x Width in.	mm
FD729918-12FS	72.00 x 99.50 x 18.00	1829 x 2527 x 457	67.60	1717	31.90	810	10	60.00 x 27.75	1524 x 705	60.00 x 60.00	1524 x 1524
FD8411718-12FS	84.00 x 117.50 x 18.00	2134 x 2985 x 457	79.60	2022	37.90	962	10	72.00 x 33.75	1829 x 857	72.00 x 72.00	1829 x 1829
FD9011724-12FS	90.00 x 117.50 x 24.00	2286 x 2985 x 610	79.60	2022	37.90	962	10	78.00 x 33.75	1981 x 857	78.00 x 72.00	1981 x 1829

ID = Inside Dimension

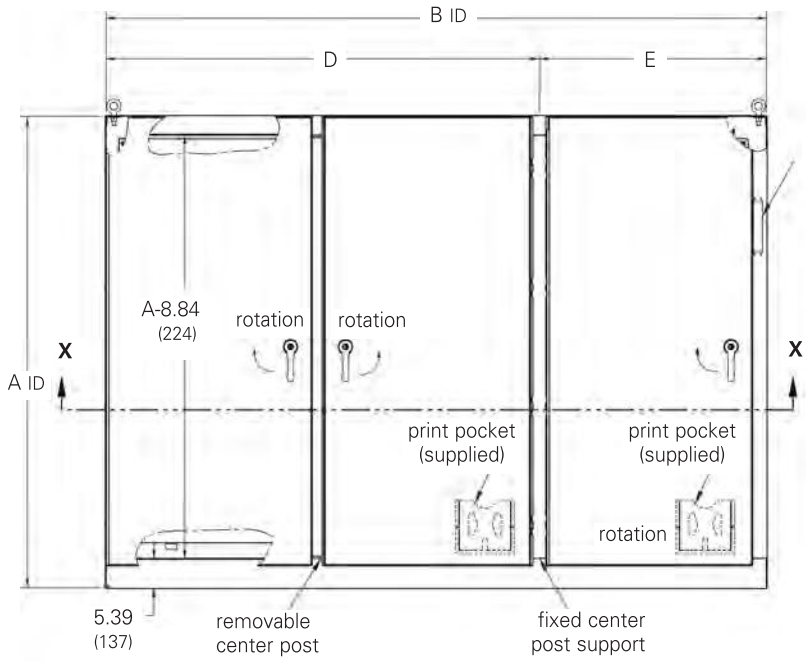

Front View

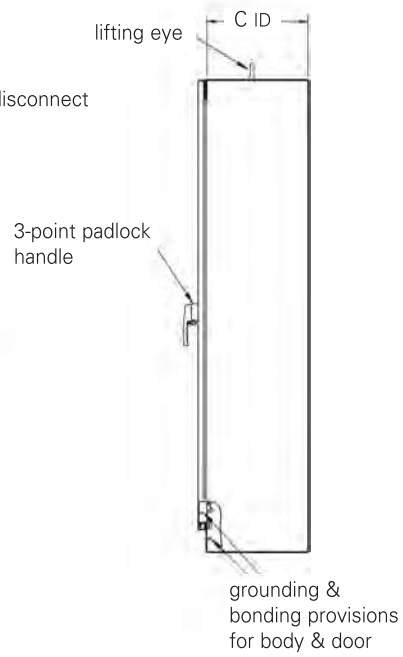

Side View

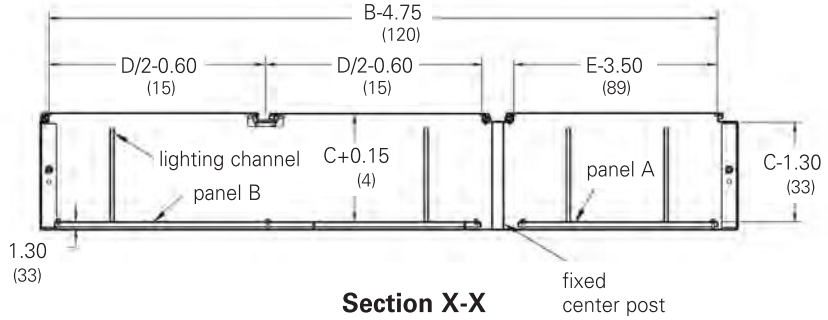

Section X-X

Notes: Dimensions are in inches. Millimeters shown are for reference only. Data subject to change without notice.
Four lifting eyes are furnished when C dimension is 24" (610 mm) or more.

Ground-Mount Enclosures
Type 12 Heavy-Duty Four-Door
Flange-Mount Free-Standing with 3-Point Locking

Illustration Sheet and Catalog Number
Subclass: DOF

Enclosure	Enclosure Size			Panel Size	
	Height x Width x Depth		Gauge	Height x Width	
Catalog Number	in.	mm		in.	mm
FD8415718-12FS	84.00 x 157.50 x 18.00	2134 x 4001 x 457	10	72.00 x 72.00	1829 x 1829

ID = Inside Dimension

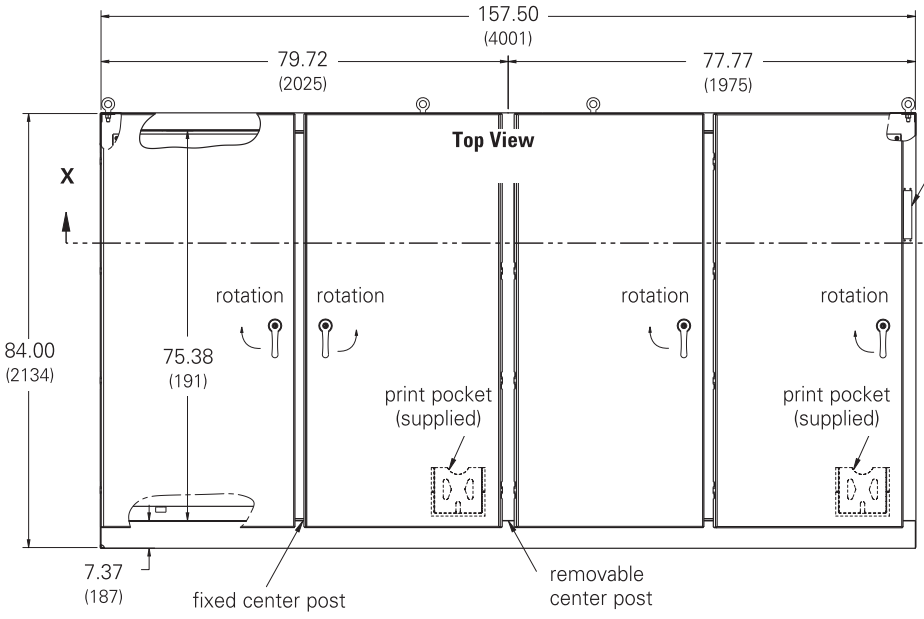

Front View

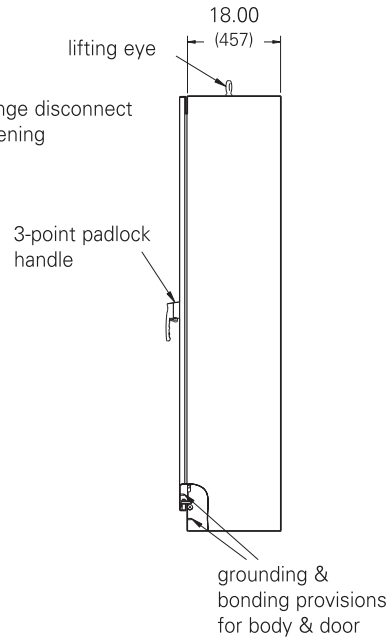

Side View

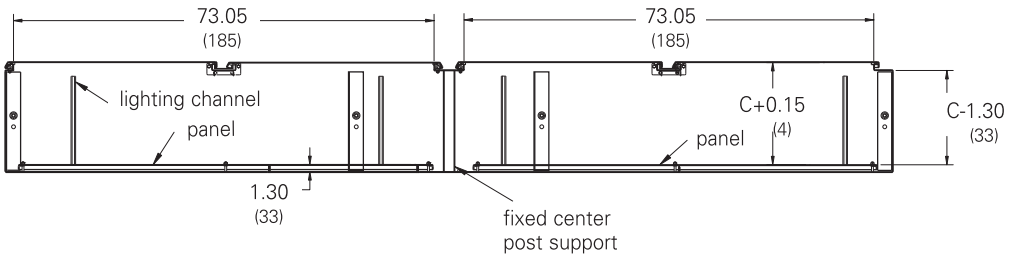

Section X-X

Notes: Dimensions are in inches. Millimeters shown are for reference only. Data subject to change without notice.

Ground-Mount Enclosures
Type 12 Heavy-Duty Five-Door
Flange-Mount Free-Standing with 3-Point Locking
Illustration Sheet and Catalog Number
Subclass: DOF

Enclosure	Enclosure Size			Panel A Size		Panel B Size	
	Height x Width x Depth		Gauge	Height x Width		Height x Width	
Catalog Number	in.	mm		in.	mm	in.	mm
FD8419618-12FS	84.00 x 196.75 x 18.00	2134 x 4997 x 457	10	72.00 x 33.75	1829 x 857	72.00 x 72.00	1829 x 1829

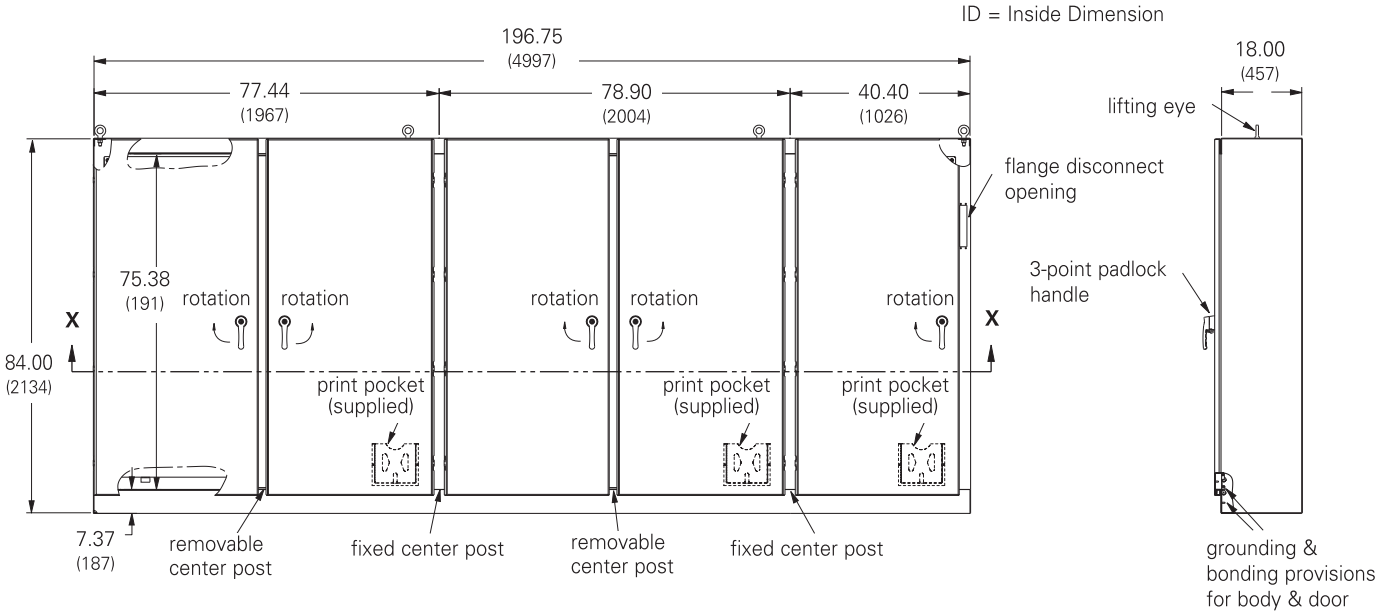

Front View **Side View**

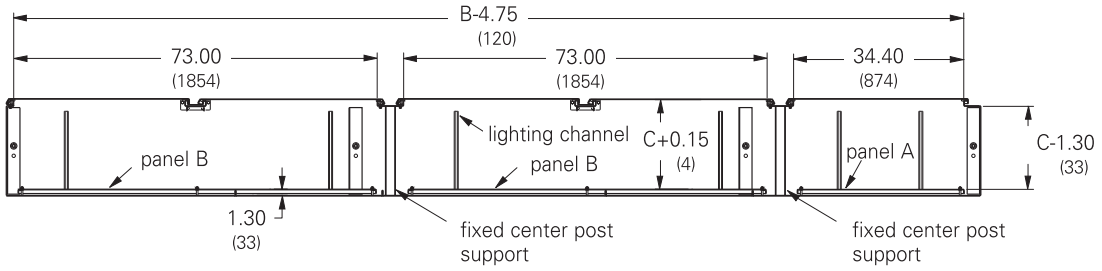

Section X-X

Notes: Dimensions are in inches. Millimeters shown are for reference only. Data subject to change without notice.

Ground-Mount Enclosures
Type 12 Heavy-Duty Single & Multi-Door
Flange-Mount Free-Standing with 3-Point Locking
Illustration Sheet

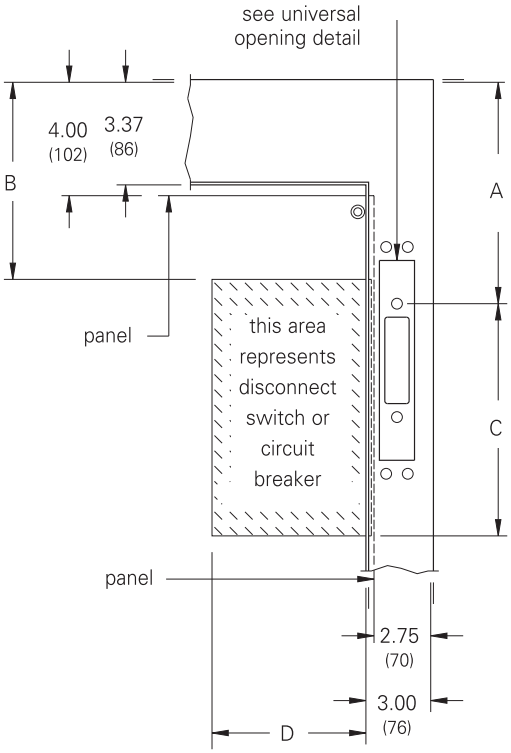

Flange Mounting
(1 and 2 door enclosures)

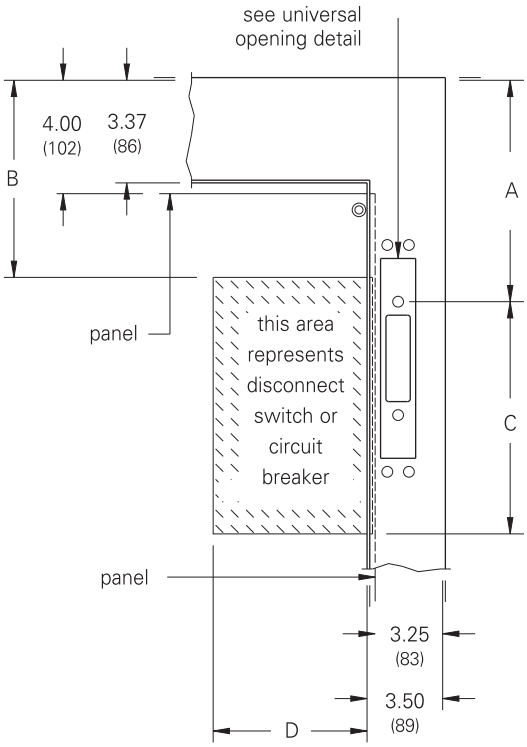

Flange Mounting
(3, 4 and 5 door enclosures)

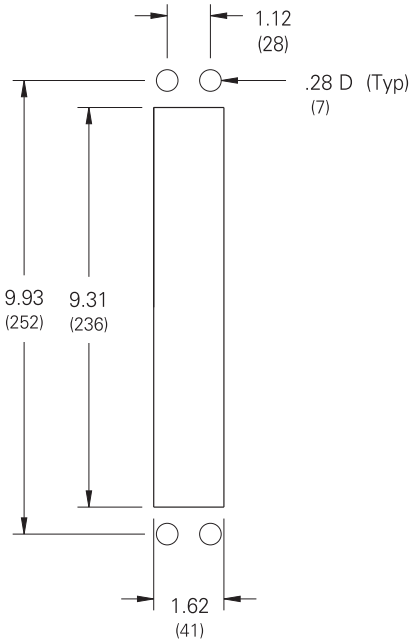

Universal Opening Detail

The dimensional information provided in these drawings is derived from information supplied by the manufacturer of the equipment to be installed. Fit and function of all equipment should be checked before and after installation to assure proper and safe operation and compliance with the applicable regulations, codes and standards.

Universal opening must be filled with an operator adapter kit for the specific brand and type of disconnect being used, (see page 451).

Important Note

When ordering flange-mounted disconnect enclosures, be sure to include all the necessary components.

1. A flange-mounted disconnect enclosure
2. Operator adapter plates MUST be ordered for the specific brand and type of disconnect being used, (see page 451)

Disconnect switch (or circuit breaker), operating handle and operating mechanism are not furnished with enclosure, see disconnect ordering information, pages 326, 332 - 339.

Notes: Refer to disconnect table for associated dimensions.
Dimensions are in inches. Millimeters shown are for reference only. Data subject to change without notice.

Ground-Mount Enclosures
Type 12 Modular Free-Standing
Data Sheet

Application
- Houses electrical controls and instruments
- Protects against circulating dust, falling dirt and dripping non-corrosive liquids

Standards
- UL 508A listed, Type 12
- CSA C22.2 No.94 certified, Type 12
- Conforms to NEMA standard for Type 12

Finish
- Wash and phosphate undercoat
- ANSI 61 gray polyester powder finish
- Panels have a white polyester powder finish

Accessories
- Channel mounting hardware
- Blank adapter plates
- Operator adapters
- Touch-up paint
- Replacement handles: deafeater handle BD-PDHB and keyed handle BD-PKHB (see pages 428 & 429).
- See Accessories section

Construction
- Enclosure and door are fabricated from (12) gauge steel
- All continuous welded seams are finished smooth
- Doors are secured to the body with removable concealed hinges and a center locating 3-point key-locking and padlock handle mechanism
- Modern bevel profile on hinge side of enclosure door(s)
- Slave doors cannot open without activation of mechanical interlock but can close in any order
- Doors have an oil-resistant gasket
- Ground stud provided on door(s) and body
- Print pocket provided
- Modular design and flanged side opening provide strength and a variety of mounting arrangements
- Heavy steel stiffeners welded across the back provide enclosure rigidity
- Removable panels mounted on .375-16 collar studs and panel supports are furnished behind each door
- Large lifting eyebolts are supplied
- Two styles of enclosure construction and specific features:
  1. Single-door disconnect enclosure - Left side open. Door hinges left serving as a master door with connecting interlocks which prevent slave doors from opening first. Defeater mechanism on door requires a screwdriver to open. Universal cut-out on right side flange for disconnect operator.
  2. Two-door disconnect enclosure - Left side open. Both doors hinge left, the right side serving as the master with connecting interlocks which prevent slave doors from opening first. Defeater mechanism on door requires a screwdriver to open. Universal cut-out on right flange for disconnect operator. Center post is removable. Lighting mounting channel provided.

Discount Schedule: C2
Subclass: DOG

Important Note

When ordering modular enclosure systems, be sure to include all the necessary components.
1. Disconnect master or slave enclosure
2. Gasket kits and/or end plates (see page 330)
3. Operator adapter plates MUST be ordered for the specific brand and type of disconnect being used, (see page 451)

Disconnect switch (or circuit breaker), operating handle and operating mechanism are not furnished with enclosure, see disconnect ordering information, pages 332 - 339.

Notes: We can provide special sizes, finishes and other modifications. Consult the factory for your special requirements.

Ground-Mount Enclosures
Type 12 Modular Single-Door Free-Standing
Illustration Sheet and Catalog Number

Enclosure	Enclosure Size Height x Width x Depth A x B x C		Panel Size Height x Width	
Catalog Number	in.	mm	in.	mm
MFD723918-12FS	72.00 x 39.75 x 18.00	1829 x 1010 x 457	60.00 x 33.75	1524 x 857
MFD843918-12FS	84.00 x 39.75 x 18.00	2134 x 1010 x 457	72.00 x 33.75	1829 x 857
MFD843924-12FS	84.00 x 39.75 x 24.00	2134 x 1010 x 610	72.00 x 33.75	1829 x 857

ID = Inside Dimension

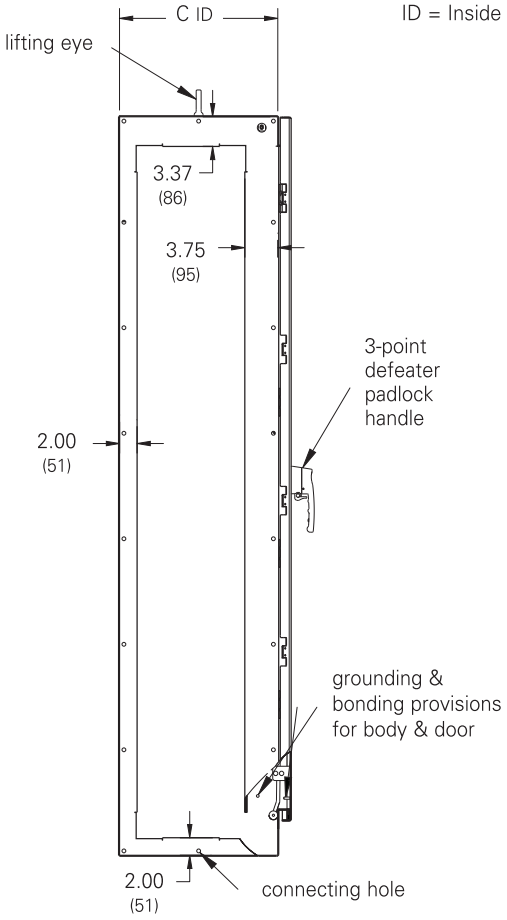

Side View

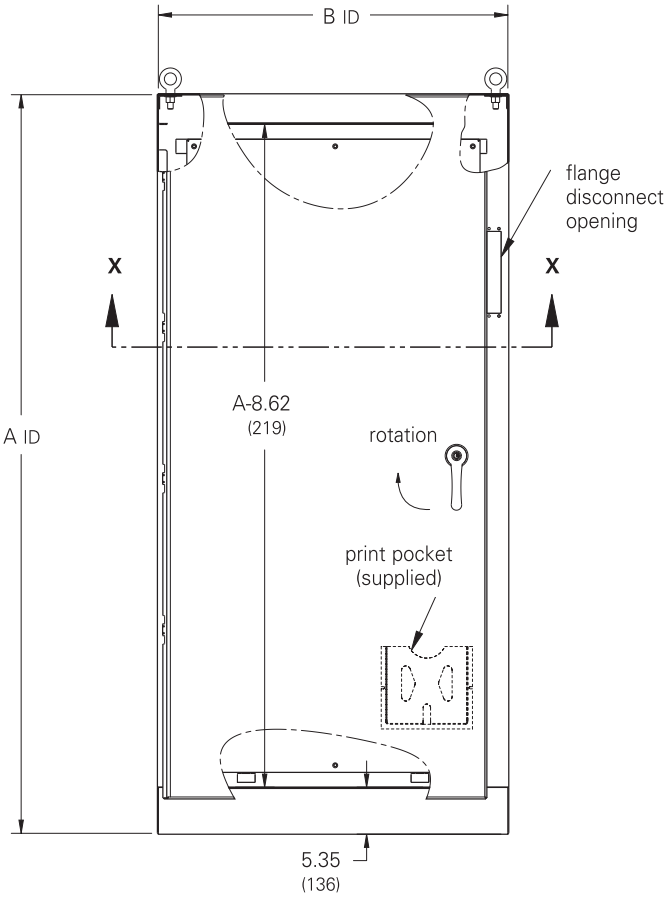

Front View

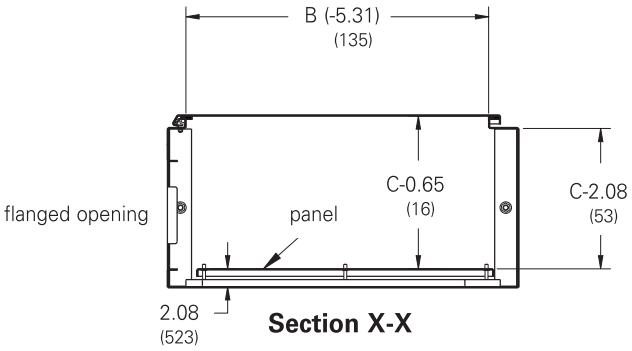

Section X-X

Notes: Four lifting eyes are furnished when C dimension is 24 (609 mm). Dimensions are in inches. Millimeters shown are for reference only. Data subject to change without notice.

Ground-Mount Enclosures
Type 12 Modular Double-Door Free-Standing
Illustration Sheet and Catalog Number

Enclosure	Enclosure Size		Panel Size	
	Height x Width x Depth			
	A x B x C		Height x Width	
Catalog Number	in.	mm	in.	mm
MFD727818-12FS	72.00 x 78.00 x 18.00	1829 x 1981 x 457	60.00 x 72.00	1524 x 1829
MFD847818-12FS	84.00 x 78.00 x 18.00	2134 x 1981 x 457	72.00 x 72.00	1829 x 1829
MFD847824-12FS	84.00 x 78.00 x 24.00	2134 x 1981 x 610	72.00 x 72.00	1829 x 1829

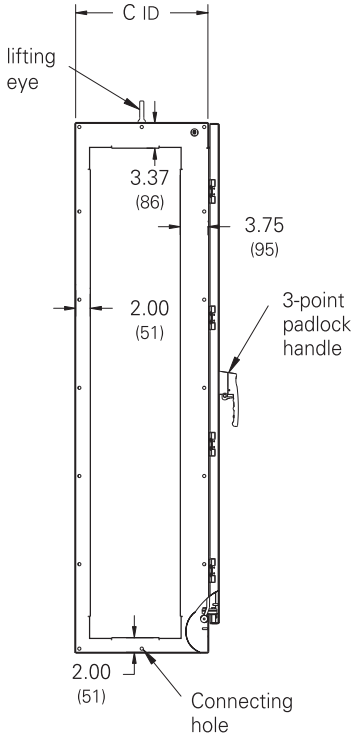

Side View

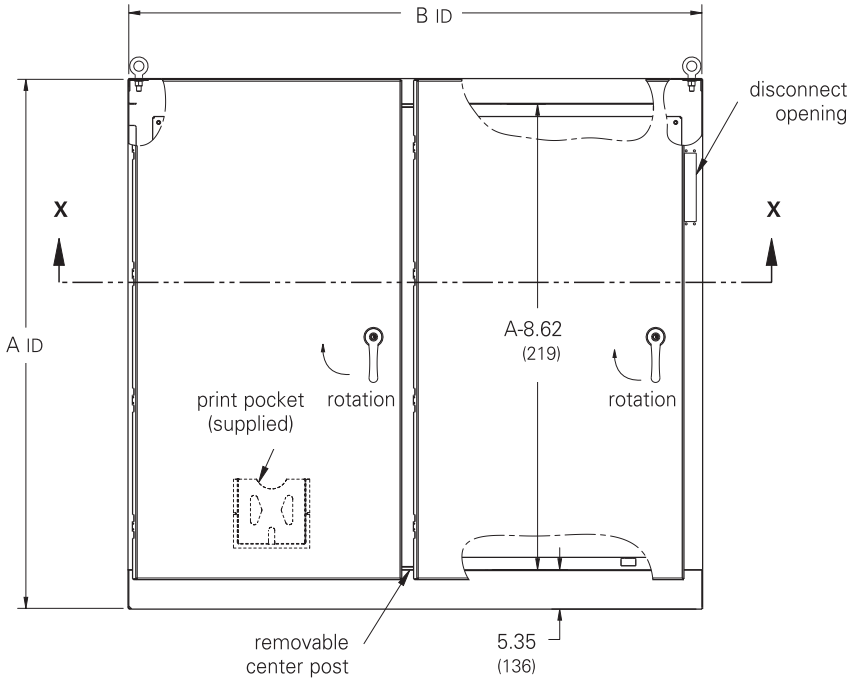

Front View

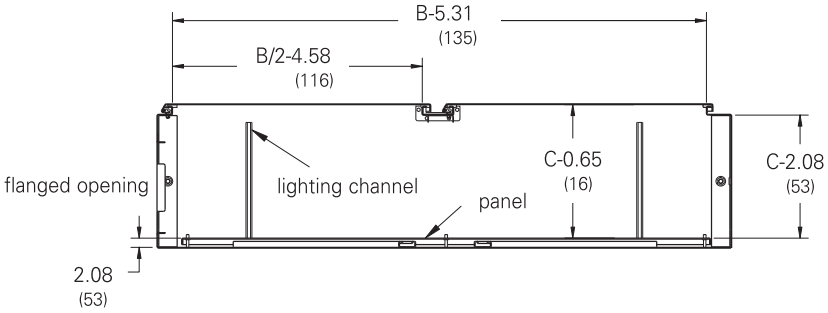

Section X-X

Notes: Four lifting eyes are furnished when C dimension is 24 (609 mm). Dimensions are in inches. Millimeters shown are for reference only. Data subject to change without notice.

Free-Standing Accessories
End Plates & Gasket Kits
Illustration Sheet and Catalog Number

Modular Accessories

Catalog Number	Size A in.	Size A mm	Size B in.	Size B mm	Fits Enclosure H x D in.	Fits Enclosure H x D mm	Fits Enclosure H x D in.	Fits Enclosure H x D mm
End Plate								
M7218-12FEK	72.00	1829	18.00	457	72.00	1829	18.00	457
M8418-12FEK	84.00	2134	18.00	457	84.00	2134	18.00	457
M8424-12FEK	84.00	2134	24.00	610	84.00	2134	24.00	610
Flat End Plate/Barrier								
M7218-12FBK	72.00	1829	18.25	464	72.00	1829	18.00	457
M8418-12FBK	84.00	2134	18.25	464	84.00	2134	18.00	457
M8424-12FBK	84.00	2134	24.25	464	84.00	2134	24.00	610
Gasket Kit								
M7218-12FGK	72.00	1829	18.00	457	72.00	1829	18.00	457
M8418-12FGK	84.00	2134	18.00	457	84.00	2134	18.00	457
M8424-12FGK	84.00	2134	24.00	610	84.00	2134	24.00	610

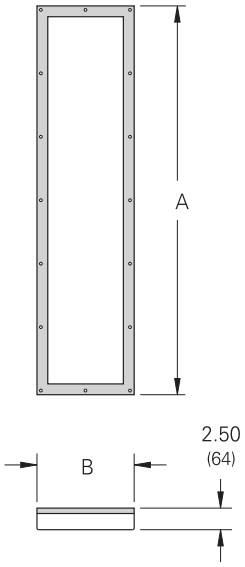

End Plate
Formed end plate and gasket used to seal open end of Modular enclosure. Includes: End Plate, Gasket & Hardware.

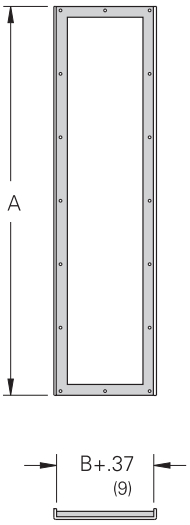

Flat End Plate
Flat end plate and gasket used to seal open end of Modular enclosure. Also can serve as a barrier when additional gasket is used. Includes: Flat End Plate, Gasket & Hardware

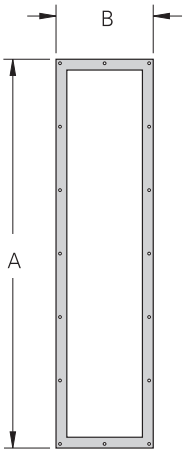

Gasket Kit
Pre-cut and pre-punched high density poron gasket is required for sealing barrier to additional modular enclosures when ganging. Includes: Gasket & Hardware.

Notes: Dimensions are in inches. Millimeters shown are for reference only. Data subject to change without notice.

Ground-Mount Enclosures
Type 12 Modular Free-Standing
Illustration Sheet

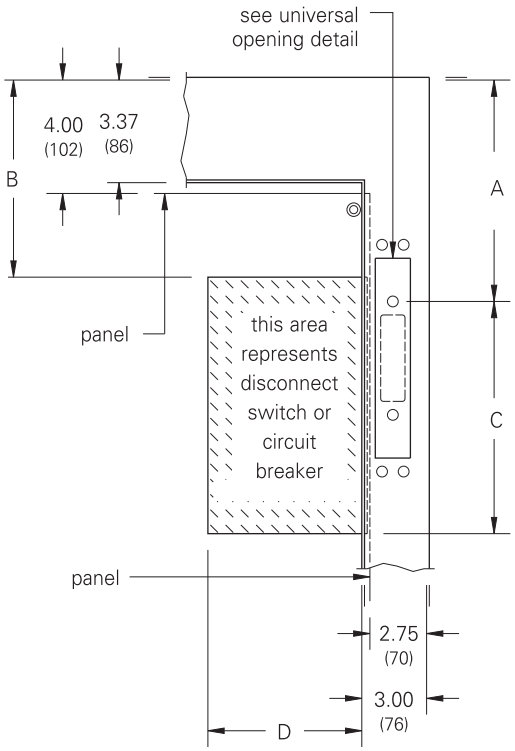

Flange Mounting

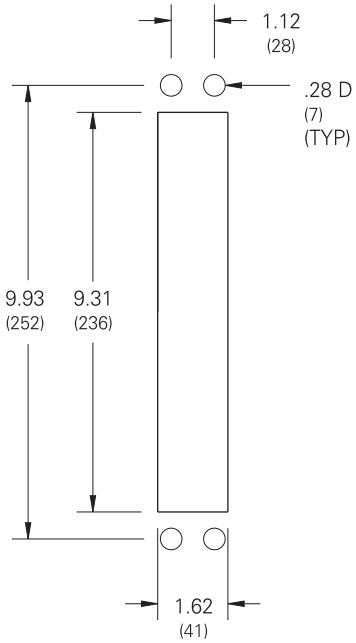

Universal Opening Detail

The dimensional information provided in this drawing is derived from information supplied by the manufacturer of the equipment to be installed. Fit and function of all equipment should be checked before and after installation to assure proper and safe operation and compliance with the applicable regulations, codes and standards.

Universal opening must be filled with an operator adapter kit for the specific brand and type of disconnect being used, (see page 451).

Important Note

When ordering modular enclosure systems, be sure to include all the necessary components.

1. Disconnect master or slave enclosure
2. Gasket kits and/or end plates (see page 330)
3. Operator adapter plates MUST be ordered for the specific brand and type of disconnect being used, (see page 451)

Disconnect switch (or circuit breaker), operating handle and operating mechanism are not furnished with enclosure, see disconnect ordering information, pages 331 - 339.

Notes: Refer to disconnect table for associated dimensions. Dimensions are in inches. Millimeters shown are for reference only. Data subject to change without notice.

Free-Standing Enclosures

Disconnect Ordering Information

Allen-Bradley® †

1494V / 1494U Disconnect Mechanism

Allen-Bradley† Mechanism for Switches	Amp	Fuse Clip Rating		Fuse Class	Enclosure Height												C		D(1)	
					72				84				90							
		Amp	Volt		A		B		A		B		A		B					
					in.	mm	in.	mm	in.	mm	in.	mm	in.	mm	in.	mm	in.	mm	in.	mm
DS30	30A	(non)	(non)	--	11.87	301	10.00	254	17.37	441	15.50	394	20.37	517	18.50	470	4.00	102	6.75	171
DS30	30A	30A	250V	H,K,R	11.87	301	10.00	254	17.37	441	15.50	394	20.37	517	18.50	470	5.25	133	6.75	171
DS30	30A	30A	600V	H,K,R	11.87	301	10.00	254	17.37	441	15.50	394	20.37	517	18.50	470	8.00	203	6.75	171
DS30	30A	30A	600V	J	11.87	301	10.00	254	17.37	441	15.50	394	20.37	517	18.50	470	5.25	133	6.75	171
DS30	30A	60A	250V	H,K	11.87	301	10.00	254	17.37	441	15.50	394	20.37	517	18.50	470	6.00	152	6.75	171
DS30	30A	60A	600V	H,K	11.87	301	10.00	254	17.37	441	15.50	394	20.37	517	18.50	470	8.50	216	6.75	171
DS30	30A	60A	600V	J	11.87	301	10.00	254	17.37	441	15.50	394	20.37	517	18.50	470	5.50	140	6.75	171
DS60	60A	(non)	(non)	--	11.87	301	9.87	251	17.37	441	15.37	390	20.37	517	18.37	467	4.00	102	6.75	171
DS60	60A	30A	600V	H,K,R	11.87	301	9.87	251	17.37	441	15.37	390	20.37	517	18.37	467	8.00	203	6.75	171
DS60	60A	60A	250V	H,K,R	11.87	301	9.87	251	17.37	441	15.37	390	20.37	517	18.37	467	6.00	152	6.75	171
DS60	60A	60A	600V	H,K,R	11.87	301	9.87	251	17.37	441	15.37	390	20.37	517	18.37	467	8.50	216	6.75	171
DS60	60A	60A	600V	J	11.87	301	9.87	251	17.37	441	15.37	390	20.37	517	18.37	467	5.50	140	6.75	171
DS60	60A	100A	250V	H,K	11.87	301	9.87	251	17.37	441	15.37	390	20.37	517	18.37	467	8.50	216	6.75	171
DS60	60A	100A	600V	H,K	11.87	301	9.87	251	17.37	441	15.37	390	20.37	517	18.37	467	10.50	267	6.75	171
DS60	60A	100A	600V	J	11.87	301	9.87	251	17.37	441	15.37	390	20.37	517	18.37	467	7.25	184	6.75	171
DS100	100A	(non)	(non)	--	11.87	301	8.37	213	17.37	441	13.87	390	20.37	517	16.87	428	4.75	121	8.00	203
DS100	100A	100A	250V	H,K,R	11.87	301	8.37	213	17.37	441	13.87	390	20.37	517	16.87	428	10.50	267	8.00	203
DS100	100A	100A	600V	H,K,R	11.87	301	8.37	213	17.37	441	13.87	390	20.37	517	16.87	428	12.50	318	8.00	203
DS100	100A	100A	600V	J	11.87	301	8.37	213	17.37	441	13.87	390	20.37	517	16.37	416	9.25	235	8.00	203
DS100	100A	200A	250V	H,K	11.87	301	8.37	213	17.37	441	13.87	390	20.37	517	16.87	428	11.25	286	8.00	203
DS100	100A	200A	600V	H,K	11.87	301	8.37	213	17.37	441	13.87	390	20.37	517	16.87	428	13.75	349	8.00	203
DS100	100A	200A	600V	J	11.87	301	8.37	213	17.37	441	13.87	390	20.37	517	16.87	428	10.00	254	8.00	203
DS200	200A	(non)	(non)	--	10.43	265	6.00	152	15.93	405	11.50	292	18.93	481	14.50	368	10.00	254	11.00	279
DS200	200A	200A	250V	H,K,R	10.43	265	6.00	152	15.93	405	11.50	292	18.93	481	14.50	368	15.00	381	11.00	279
DS200	200A	200A	600V	H,K,R	10.43	265	6.00	152	15.93	405	11.50	292	18.93	481	14.50	368	17.25	438	11.00	279
DS200	200A	200A	600V	J	10.43	265	6.00	152	15.93	405	11.50	292	18.93	481	14.50	368	13.50	343	11.00	279
DS200	200A	400A	250V	H,K	10.43	265	6.00	152	15.93	405	11.50	292	18.93	481	14.50	368	15.75	400	11.00	279
DS200	200A	400A	600V	H,K	10.43	265	6.00	152	15.93	405	11.50	292	18.93	481	14.50	368	18.75	476	11.00	279
DS200	200A	400A	600V	J	10.43	265	6.00	152	15.93	405	11.50	292	18.93	481	14.50	368	14.25	362	11.00	279
DS400	400A	(non)	(non)	--	*	*	*	*	15.93	405	9.62	244	18.93	481	12.62	321	10.75	273	11.00	279
DS400	400A	400A	250V	H,K,R	*	*	*	*	15.93	405	9.62	244	18.93	481	12.62	321	16.25	413	11.00	279
DS400	400A	400A	600V	H,K,R	*	*	*	*	15.93	405	9.62	244	18.93	481	12.62	321	19.25	489	11.00	279
DS400	400A	400A	600V	J	*	*	*	*	15.93	405	9.62	244	18.93	481	12.62	321	14.75	375	11.00	279

Allen-Bradley† Mechanism for Circuit Breakers	Amp	Circuit Breaker Type		Enclosure Height												C		D(1)	
				72				84				90							
		Manufacturer	Frame(s)	A		B		A		B		A		B					
				in.	mm	in.	mm	in.	mm	in.	mm	in.	mm	in.	mm	in.	mm	in.	mm
M40	150A	General Electric	TED,THED,TEC	11.87	301	11.25	286	17.37	441	16.75	425	20.37	517	19.75	502	5.75	146	4.75	121
M40	150A	Westinghouse	F (series C)	11.87	301	11.25	286	17.37	441	16.75	425	20.37	517	19.75	502	5.00	127	4.75	121
M50	250A	Westinghouse	J (series C)	11.87	301	10.87	276	17.37	441	16.37	416	20.37	517	19.37	492	9.75	248	5.00	127
M60	400A	Westinghouse	K (series C)	11.87	301	10.62	270	17.37	441	16.12	409	20.37	517	19.12	486	9.75	248	6.25	159

* Do not install disconnects in this height enclosure

(1) Dimension "D" does not include space for auxiliary switches.

The dimensional information provided in this table is derived from information supplied by the manufacturer of the equipment to be installed. Fit and function of all equipment should be checked before and after installation to assure proper and safe operation and compliance with the applicable regulations, codes and standards.

† Marks are the property of their respective owners.

Notes: Dimensions are in inches. Millimeters shown are for reference only. Data subject to change without notice.

Free-Standing Enclosures

Disconnect Ordering Information

Allen-Bradley †

1494F Disconnect Mechanism

Allen-Bradley† Mechanism for Switches	Amp	Fuse Clip Rating		Fuse Class	Enclosure Height												C		D(1)	
					72				84				90							
					A		B		A		B		A		B					
		Amp	Volt	in.	mm	in.	mm	in.	mm	in.	mm	in.	mm	in.	mm	in.	mm	in.	mm	
N30	30A	(non)	(non)	--	9.87	251	9.37	238	15.37	390	14.87	378	18.37	467	17.87	454	4.75	121	6.50	165
NF30	30A	30A	250V	H,K,R	9.87	251	9.37	238	15.37	390	14.87	378	18.37	467	17.87	454	6.50	165	6.50	165
NF30	30A	30A	600V	H,K,R	9.87	251	9.37	238	15.37	390	14.87	378	17.37	441	17.87	454	9.25	235	6.50	165
NF30	30A	30A	600V	J	9.87	251	9.37	238	15.37	390	14.87	378	18.37	467	17.87	454	6.50	165	6.50	165
NF30	30A	60A	250V	H,K,R	9.87	251	9.37	238	15.37	390	14.87	378	18.37	467	17.87	454	7.25	184	6.50	165
NF30	30A	60A	600V	H,K,R	9.87	251	9.37	238	15.37	390	14.87	378	18.37	467	17.87	454	9.75	248	6.50	165
NF30	30A	60A	600V	J	9.87	251	9.37	238	15.37	390	14.87	378	18.37	467	17.87	454	6.75	171	6.50	165
N60	60A	(non)	(non)	--	9.87	251	8.62	219	15.37	390	14.12	359	18.37	467	17.12	435	4.75	121	6.50	165
NF60	60A	30A	600V	H,K,R	9.87	251	8.62	219	15.37	390	14.12	359	18.37	467	17.12	435	10.50	267	6.50	165
NF60	60A	60A	250V	H,K,R	9.87	251	8.82	219	15.37	390	14.12	359	18.37	467	17.12	435	8.50	216	6.50	165
NF60	60A	60A	600V	H,K,R	9.87	251	8.62	219	15.37	390	14.12	359	18.37	467	17.12	435	11.00	279	6.50	165
NF60	60A	60A	600V	J	9.87	251	8.62	219	15.37	390	14.12	359	18.37	467	17.12	435	57.75	1467	6.50	165
NF60	60A	100A	250V	H,K,R	9.87	251	8.62	219	15.37	390	14.12	359	18.37	467	17.12	435	11.00	279	6.50	165
NF60	60A	100A	600V	H,K,R	9.87	251	8.62	219	15.37	390	14.12	359	18.37	467	17.12	435	13.00	330	6.50	165
NF60	60A	100A	600V	J	9.87	251	8.62	219	15.37	390	14.12	359	18.37	467	17.12	435	9.75	248	6.50	165
N100	100A	(non)	(non)	--	9.87	251	6.75	171	15.37	390	12.25	311	18.37	467	15.25	387	4.75	121	7.25	184
NF100	100A	100A	250V	H,K,R	9.87	251	6.75	171	15.37	390	12.25	311	18.37	467	15.25	387	11.50	292	7.50	191
NF100	100A	100A	600V	H,K,R	9.87	251	6.75	171	15.37	390	12.25	311	18.37	467	15.25	387	13.50	343	7.50	191
NF100	100A	100A	600V	J	9.87	251	6.75	171	15.37	390	12.25	311	18.37	467	15.25	387	10.25	260	7.50	191
NF100	100A	200A	250V	H,K,R	9.87	251	6.75	171	15.37	390	12.25	311	18.37	467	15.25	387	12.25	311	7.75	197
NF100	100A	200A	600V	H,K,R	9.87	251	6.75	171	15.37	390	12.25	311	18.37	467	15.25	387	14.75	375	7.75	197
NF100	100A	200A	600V	J	9.87	251	6.75	171	15.37	390	12.25	311	18.37	467	15.25	387	11.00	279	7.75	197
N200	200A	(non)	(non)	--	8.56	217	5.12	130	14.06	357	10.62	270	17.06	433	13.62	346	7.25	184	10.50	267
NF200	200A	200A	250V	H,K,R	8.56	217	5.12	130	14.06	357	10.62	270	17.06	433	13.62	346	15.00	381	10.50	267
NF200	200A	200A	600V	H,K,R	8.56	217	5.12	130	14.06	357	10.62	270	17.06	433	13.62	346	17.50	445	10.50	267
NF200	200A	200A	600V	J	8.56	217	5.12	130	14.06	357	10.62	270	17.06	433	13.62	346	13.75	349	10.50	267
NF200	200A	400A	250V	H,K,R	8.56	217	5.12	130	14.06	357	10.62	270	17.06	433	13.62	346	16.50	419	11.00	279
NF200	200A	400A	600V	H,K,R	8.56	217	5.12	130	14.06	357	10.62	270	17.06	433	13.62	346	19.50	495	11.00	279
NF200	200A	400A	600V	J	8.56	217	5.12	130	14.06	357	10.62	270	17.06	433	13.62	346	15.00	381	11.00	279

1494D Disconnect Mechanism

Allen-Bradley† Mechanism for Circuit Breakers	Amp	Circuit Breaker Type		Enclosure Height												C		D(1)	
				60				72				90							
				A		B		A		B		A		B					
		Manufacturer	Frame(s)	in.	mm	in.	mm	in.	mm	in.	mm	in.	mm	in.	mm	in.	mm	in.	mm
N4/N40	150A	General Electric	TED,THED,TEC	9.87	251	9.25	235	15.37	390	14.75	375	18.37	467	17.75	451	5.87	149	4.62	117
N5/N55	225A	General Electric	TFK,THFK,TFC	9.87	251	8.50	216	15.37	390	14.00	356	18.37	467	17.00	432	8.87	225	4.75	121
N4/N40	150A	Westinghouse	F (series C)	9.87	251	9.25	235	15.37	390	14.75	375	18.37	467	17.75	451	5.87	149	4.62	117
N5/N50	250A	Westinghouse	J (series C)	9.87	251	8.50	216	15.37	390	14.00	356	18.37	467	17.00	432	8.87	225	4.75	121
N5/N60	400A	Westinghouse	K (series C)	9.87	251	8.50	216	15.37	390	14.00	356	18.37	467	17.00	432	8.87	225	5.87	149

* Do not install disconnects in this height enclosure

(1) Dimension "D" does not include space for auxiliary switches.

The dimensional information provided in this table is derived from information supplied by the manufacturer of the equipment to be installed. Fit and function of all equipment should be checked before and after installation to assure proper and safe operation and compliance with the applicable regulations, codes and standards.

† Marks are the property of their respective owners.

Notes: Dimensions are in inches. Millimeters shown are for reference only. Data subject to change without notice.

Free-Standing Enclosures

Disconnect Ordering Information

Cutler-Hammer® †

C361 Disconnect Mechanism

Cutler-Hammer† Mechanism for Switches	Amp	Fuse Clip Rating		Fuse Class	Enclosure Height												C		D(1)	
					72				84				90							
		Amp	Volt		A		B		A		B		A		B					
					in.	mm	in.	mm	in.	mm	in.	mm	in.	mm	in.	mm	in.	mm	in.	mm
NC	30A	(non)	(non)	--	11.87	301	10.50	267	17.37	441	16.00	406	20.37	517	19.00	483	4.75	121	6.25	159
SC21	30A	30A	250V	H,K,R	11.87	301	10.50	267	17.37	441	16.00	406	20.37	517	19.00	483	7.75	197	6.25	159
SC61	30A	30A	600V	H,K,R	11.87	301	10.50	267	17.37	441	16.00	406	20.37	517	19.00	483	7.75	197	6.25	159
SC61	30A	60A	250V	H,K,R	11.87	301	10.50	267	17.37	441	16.00	406	20.37	517	19.00	483	8.25	210	6.25	159
ND	60A	(non)	(non)	--	11.87	301	10.50	267	17.37	441	16.00	406	20.37	517	19.00	483	4.75	121	6.25	159
SD22	60A	30A	600V	J	11.87	301	10.50	267	17.37	441	16.00	406	20.37	517	19.00	483	7.75	197	6.25	159
SD22	60A	60A	250V	H,K,R	11.87	301	10.50	267	17.37	441	16.00	406	20.37	517	19.00	483	8.25	210	6.25	159
SD62	60A	60A	600V	H,K,R	11.87	301	10.50	267	17.37	441	16.00	406	20.37	517	19.00	483	8.25	210	6.25	159
SD62	60A	60A	600V	J	11.87	301	10.50	267	17.37	441	16.00	406	20.37	517	19.00	483	8.00	203	6.25	159
NE	100A	(non)	(non)	--	11.87	301	10.12	257	17.37	441	15.62	397	20.37	517	18.62	473	4.25	108	7.50	191
SE263	100A	100A	250V	H,K,R	11.87	301	10.12	257	17.37	441	15.62	397	20.37	517	18.62	473	9.00	229	7.50	191
SE263	100A	100A	600V	H,K,R	11.87	301	10.12	257	17.37	441	15.62	397	20.37	517	18.62	473	9.00	229	7.50	191
SE263	100A	100A	600V	J	11.87	301	10.12	257	17.37	441	15.62	397	20.37	517	18.62	473	7.75	197	7.50	191
NF	200A	(non)	(non)	--	11.87	301	8.12	257	17.37	441	13.62	397	20.37	517	16.62	422	13.25	337	10.25	260
SF264	200A	200A	250V	H,K,R	11.87	301	8.12	257	17.37	441	13.62	397	20.37	517	16.62	422	13.25	337	10.25	260
SF264	200A	200A	600V	H,K,R	11.87	301	8.12	257	17.37	441	13.62	397	20.37	517	16.62	422	13.25	337	10.25	260

C371 Disconnect Mechanism

Cutler-Hammer† Mechanism for Circuit Breakers	Amp	Circuit Breaker Type		Enclosure Height												C		D(1)	
				72				84				90							
		Manufacturer	Frame(s)	A		B		A		B		A		B					
				in.	mm	in.	mm	in.	mm	in.	mm	in.	mm	in.	mm	in.	mm	in.	mm
C371E	150A	Cutler-Hammer	HMCP,FS,FH	11.87	301	11.62	295	17.37	441	17.12	435	20.37	517	20.12	511	6.00	152	5.75	146
C371F (1)	225A	Cutler-Hammer	HMCP,JS,JH,JL	11.87	301	11.50	292	17.37	441	17.00	432	20.37	517	20.00	508	11.00	279	8.25	210
C371F (1)	400A	Cutler-Hammer	HMCP,KS,KH	11.87	301	11.00	279	17.37	441	16.50	419	20.37	517	19.50	495	9.75	248	8.25	210
C371G (2)	600A	Cutler-Hammer	LS,LH	11.87	301	9.37	238	17.37	441	14.87	378	20.37	517	17.87	454	8.50	216	12.00	305
C371K (3)	800A	Cutler-Hammer	MS,MH	*	*	*	*	17.37	441	11.37	289	20.37	517	14.37	365	10.25	260	12.00	305
C371K (3)	1200A	Cutler-Hammer	NS,NH	*	*	*	*	17.37	441	11.37	289	20.37	517	14.37	365	10.25	260	12.00	305
C371E	150A	Westinghouse	F (series C)	11.87	301	11.62	295	17.37	441	17.12	435	20.37	517	20.12	511	6.00	152	5.75	146
C371F (1)	250A	Westinghouse	J (series C)	11.87	301	11.50	292	17.37	441	17.00	432	20.37	517	20.00	508	9.00	229	8.25	210
C371F (1)	400A	Westinghouse	K (series C)	11.87	301	11.00	279	17.37	441	16.50	419	20.37	517	19.50	495	9.75	248	8.25	210
C371G (2)	600A	Westinghouse	LA,LC	11.87	301	9.37	238	17.37	441	14.87	378	20.37	517	17.87	454	8.50	216	12.00	305
C371K (3)	800A	Westinghouse	MC	*	*	*	*	17.37	441	11.37	289	20.37	517	14.37	365	10.25	260	12.00	305
C371K (3)(4)(5)	12000A	Westinghouse	NC	*	*	*	*	17.37	441	11.37	289	20.37	517	14.37	365	10.25	260	12.00	305

* Do not install disconnects in this height enclosure

(1) Wire bending space "B" does not allow the use of cable larger than 300 MCM in 72H enclosures.
(2) Wire bending space "B" does not allow the use of cable larger than 250 MCM in 72H enclosures.
(3) Wire bending space "B" does not allow the use of cable larger than 300 MCM in 84H enclosures.
(4) Wire bending space "B" does not allow the use of 4 cables per terminal larger than 350 MCM in 90H enclosures.
(5) Wire bending space "B" does not allow the use of Westinghouse terminals TA1201NB1 in 84H or 90H enclosures

The dimensional information provided in this table is derived from information supplied by the manufacturer of the equipment to be installed. Fit and function of all equipment should be checked before and after installation to assure proper and safe operation and compliance with the applicable regulations, codes and standards.

† Marks are the property of their respective owners.

Notes: Dimensions are in inches. Millimeters shown are for reference only. Data subject to change without notice.

Free-Standing Enclosures

Disconnect Ordering Information
General Electric †

TDA † Disconnects

General Electric† Mechanism for Switches	Amp	Fuse Clip Rating		Fuse Class	Enclosure Height												C		D	
					72				84				90							
		Amp	Volt		A		B		A		B		A		B					
					in.	mm	in.	mm	in.	mm	in.	mm	in.	mm	in.	mm	in.	mm	in.	mm
NC	30A	(non)	(non)	--	11.87	301	10.50	267	17.37	441	16.00	406	20.37	517	19.00	483	4.75	121	6.25	159
TDOM1A	30A	(non)	(non)	--	11.87	301	12.37	314	17.37	441	17.87	45	20.37	517	20.87	530	7.00	178	5.50	140
TDOM1A	30A	30A	250V	H,R	11.87	301	12.37	314	17.37	441	17.87	454	20.37	517	20.87	530	7.00	178	5.50	140
TDOM1B	30A	30A	600V	H,R	11.87	301	12.37	314	17.37	441	17.87	454	20.37	517	20.87	530	11.50	292	5.50	140
TDOM1B	30A	60A	250V	H,R	11.87	301	12.37	314	17.37	441	17.87	454	20.37	517	20.87	530	11.50	292	5.50	140
TDOM1B	30A	60A	600V	H,R	11.87	301	12.37	314	17.37	441	17.87	454	20.37	517	20.87	530	11.50	292	5.50	140
TDOM1A	60A	(non)	(non)	--	11.87	301	12.37	314	17.37	441	17.87	454	20.37	517	20.87	530	7.00	178	5.50	140
TDOM1B	60A	60A	250V	H,R	11.87	301	12.37	314	17.37	441	17.87	454	20.37	517	20.87	530	11.50	292	5.50	140
TDOM1B	60A	60A	600V	H,R	11.87	301	12.37	314	17.37	441	17.87	454	20.37	517	20.87	530	11.50	292	5.50	140
TDOM1B	60A	100A	250V	H,R	11.87	301	12.37	314	17.37	441	17.87	454	20.37	517	20.87	530	11.50	292	5.50	140
TDOM1B	60A	100A	600V	H,R	11.87	301	12.37	314	17.37	441	17.87	454	20.37	517	20.87	530	11.50	292	5.50	140
TDOM1A	100A	(non)	(non)	--	11.87	301	12.37	314	17.37	441	17.87	454	20.37	517	20.87	530	7.00	178	5.50	140
TDOM1B	100A	100A	250V	H,R	11.87	301	12.37	314	17.37	441	17.87	454	20.37	517	20.87	530	11.50	292	5.50	140
TDOM1B	100A	100A	600V	H,R	11.87	301	12.37	314	17.37	441	17.87	454	20.37	517	20.87	530	11.50	292	5.50	140
TDOM1B	100A	200A	250V	H,R	11.87	301	12.37	314	17.37	441	17.87	454	20.37	517	20.87	530	11.50	292	5.50	140
TDOM1B	100A	200A	600V	H,R	11.87	301	12.37	314	17.37	441	17.87	454	20.37	517	20.87	530	11.50	292	5.50	140
TDOM2	200A	(non)	(non)	--	11.87	301	9.75	248	17.37	441	15.25	387	20.37	517	18.25	464	7.00	178	9.25	235
TDOM2	200A	200A	250V	H,R	11.87	301	9.75	248	17.37	441	15.25	387	20.37	517	18.25	464	15.50	394	9.25	235
TDOM2	200A	200A	600V	H,R	11.87	301	9.75	248	17.37	441	15.25	387	20.37	517	18.25	464	15.50	394	9.25	235

General Electric† Mechanism for Circuit Breakers	Amp	Circuit Breaker Type	Enclosure Height												C		D	
			72				84				90							
			A		B		A		B		A		B					
			in.	mm	in.	mm	in.	mm	in.	mm	in.	mm	in.	mm	in.	mm	in.	mm
TDOM1A	150A	TEB,TEC,TED,THED	11.87	301	11.25	286	17.37	441	16.75	425	20.37	517	19.75	502	7.00	178	5.50	140
TDOM1B	150A	TB1,TEC,TECL	11.87	301	11.25	286	17.37	441	16.75	425	20.37	517	19.75	502	11.50	292	5.50	140
TDOM1C	150A	TEL	11.87	301	11.25	286	17.37	441	16.75	425	20.37	517	19.75	502	7.00	178	5.50	140
TDOM1D	150A	THCL1	11.87	301	9.87	251	17.37	441	15.37	390	20.37	517	18.37	467	7.00	178	5.50	140
TDOM3	225A	TFJ,TFK,THFK,TFL	11.87	301	10.87	276	17.37	441	16.37	416	20.35	517	19.37	492	10.50	267	6.00	152
TDOM4	400A	TJJ,TJK4,THJK4,TJL4V	11.87	301	10.00	254	17.37	441	15.50	394	20.35	517	18.50	470	8.25	210	9.50	241
TDOM4	600A	TJK6,THJK6,TJ4V,TJL4V	11.87	301	10.00	254	17.37	441	15.50	394	20.35	517	18.50	470	8.25	210	9.50	241
TDOM5	400A	TB4,TJH6S	11.87	301	10.00	254	17.37	441	15.50	394	20.35	517	18.50	470	14.25	362	9.50	241
TDOM6	225A	TLB2,THLC2	*	*	*	*	17.37	441	14.87	378	20.37	517	17.87	454	11.75	298	9.50	241
TDOM6	400A	TLB4,THLC4	*	*	*	*	17.37	441	13.50	343	20.37	517	16.50	419	11.75	298	9.50	241
TDOM6	800A	TKMA,THKMA,TK4V	*	*	*	*	*	*	*	*	20.37	517	17.87	454	11.75	298	9.50	241
TDOM6	1200A	TK4V,THK4V	*	*	*	*	*	*	*	*	20.37	517	17.87	454	11.75	298	9.50	241
TDOM7	600A	TB6	*	*	*	*	17.37	*	11.75	298	20.37	517	14.75	375	18.25	464	9.50	241
TDOM7	800A	TB8	*	*	*	*	17.37	*	11.75	298	20.37	517	14.75	375	18.25	464	9.50	241
TDOM7	1200A	TKL12S	*	*	*	*	*	*	*	*	20.37	517	14.75	375	18.25	464	9.50	241

* Do not install disconnects in this height enclosure.

The dimensional information provided in this table is derived from information supplied by the manufacturer of the equipment to be installed. Fit and function of all equipment should be checked before and after installation to assure proper and safe operation and compliance with the applicable regulations, codes and standards.

† Marks are the property of their respective owners.

Notes: Dimensions are in inches. Millimeters shown are for reference only. Data subject to change without notice.

Free-Standing Enclosures

Disconnect Ordering Information

I-T-E Siemens® †

MAX-FLEX † Disconnect Mechanism

Encl. Depth	I-T-E† Mechanism for Circuit Breakers	Cable Length	Amp	Circuit Breaker Frame in.	Device Height mm	Device Height in.	Enclosure Height A 72 mm	72 in.	84 mm	84 in.	90 mm	90 in.	C(1) nom mm	nom in.	min mm	min in.	max mm	max in.	D(2) min mm	min in.	max mm	max in.
18	FHOE036	36	125A	ED	6.37	162	11.87	301	17.37	441	20.37	517	5.37	136	-2.75	-70	13.50	343	3.00	76	9.75	248
	FHOE036	36	125A	CED	9.62	244	11.87	301	17.37	441	20.37	517	8.50	216	.06	2	16.87	428	3.00	76	9.75	248
	FHOF036	36	250A	FD	9.50	241	11.87	301	17.37	441	20.37	517	5.62	143	2.43	62	13.87	352	4.50	114	8.50	216
	FHOF036	36	250A	CFD	14.12	359	11.87	301	17.37	441	20.37	517	10.25	260	7.25	184	18.62	473	4.50	114	8.50	216
	FHOJ036	36	400A, 600A	JD, LD	11.00	279	11.87	301	17.37	441	20.37	517	5.25	133	-2.87	-73	13.43	341	7.50	191	10.12	257
	FHOJ036	36	400A, 600A	CJD	17.87	454	11.87	301	17.37	441	20.37	517	12.12	308	4.12	105	20.37	517	7.50	191	10.12	257
20	FHOE036	36	125A	ED	6.37	162	11.87	301	17.37	441	20.37	517	5.37	136	1.37	35	10.75	273	3.00	76	6.37	162
	FHOE036	36	125A	CED	9.62	244	11.87	301	17.37	441	20.37	517	8.50	216	4.62	117	14.00	356	3.00	76	6.37	162
	FHOF036	36	250A	FD	9.50	241	11.87	301	17.37	441	20.37	517	5.62	143	1.62	41	11.00	356	4.50	114	5.50	140
	FHOF036	36	250A	CFD	14.12	359	11.87	301	17.37	441	20.37	517	10.25	260	6.43	163	15.87	403	4.50	114	5.50	140
	FHOJ036	36	400A, 600A	JD, LD	11.00	279	11.87	301	17.37	441	20.37	517	5.25	133	0.00	0	10.62	270	7.50	191	7.25	184
	FHOJ036	36	400A, 600A	CJD	17.87	454	11.87	301	17.37	441	20.37	517	12.12	308	6.93	176	17.50	445	7.50	191	7.25	184
18	*	48	125A	ED	6.37	162	11.87	301	17.37	441	20.37	517	5.37	136	-15.37	-390	26.25	667	3.00	76	24.43	621
	*	48	125A	CED	9.62	244	11.87	301	17.37	441	20.37	517	8.50	216	-12.00	-305	29.50	749	3.00	76	24.43	621
	*	48	250A	FD	9.50	241	11.87	301	17.37	441	20.37	517	5.62	143	-15.00	-381	26.50	673	4.50	114	23.00	584
	*	48	250A	CFD	14.12	359	11.87	301	17.37	441	20.37	517	10.25	260	-10.25	-260	30.37	771	4.50	114	23.00	584
	*	48	400A, 600A	JD, LD	11.00	279	11.87	301	17.37	441	20.37	517	5.25	133	-15.43	-393	26.12	663	7.50	191	24.50	622
	*	48	400A, 600A	CJD	17.87	454	11.87	301	17.37	441	20.37	517	12.12	308	-8.50	-216	33.00	838	7.50	191	24.50	622
	FHON048	48	800A, 1200A	MD, ND	16.00	406	11.87	301	17.37	441	20.37	517	8.12	206	-5.12	-130	21.43	544	9.00	229	20.50	521
20	*	48	125A	ED	6.37	162	11.87	301	17.37	441	20.37	517	5.37	136	-14.87	-378	25.25	641	3.00	76	23.43	595
	*	48	125A	CED	9.62	244	11.87	301	17.37	441	20.37	517	8.50	216	-11.50	-292	28.50	724	3.00	76	23.43	595
	*	48	250A	FD	9.50	241	11.87	301	17.37	441	20.37	517	5.62	143	-14.50	-368	25.50	648	4.50	114	22.00	559
	*	48	250A	CFD	14.12	359	11.87	301	17.37	441	20.37	517	10.25	260	-9.75	-248	30.37	771	4.50	114	22.00	559
	*	48	400A, 600A	JD, LD	11.00	279	11.87	301	17.37	441	20.37	517	5.25	133	-14.93	-379	25.12	638	7.50	191	23.62	600
	*	48	400A, 600A	CJD	17.87	454	11.87	301	17.37	441	20.37	517	12.12	308	-8.00	-203	32.00	813	7.50	191	23.62	600
	FHON048	48	800A 1200A	MD, ND	16.00	406	11.87	301	17.37	441	20.37	517	8.12	206	-5.12	-130	20.93	532	9.00	229	21.00	533
24	*	48	125A	ED	6.37	162	11.87	301	17.37	441	20.37	517	5.37	136	-13.37	-340	23.25	591	3.00	76	20.62	524
	*	48	125A	CED	9.62	244	11.87	301	17.37	441	20.37	517	8.50	216	-10.00	-254	26.50	673	3.00	76	20.62	524
	*	48	250A	FD	9.50	241	11.87	301	17.37	441	20.37	517	5.62	143	-13.00	-330	23.50	597	4.50	114	19.37	492
	*	48	250A	CFD	14.12	359	11.87	301	17.37	441	20.37	517	10.25	260	-8.25	-210	28.37	721	4.50	114	19.37	492
	*	48	400A, 600A	JD, LD	11.00	279	11.87	301	17.37	441	20.37	517	5.25	133	-13.43	-341	23.12	587	7.50	191	20.93	532
	*	48	400A, 600A	CJD	17.87	454	11.87	301	17.37	441	20.37	517	12.12	308	-6.50	-165	30.00	762	7.50	191	20.93	532
	FHON048	48	800A, 1200A	MD,ND	26.00	406	11.87	301	17.37	441	20.37	517	8.12	206	-3.12	-79	19.93	506	9.00	229	20.50	521

I-T-E SIEMENS † MAX-FLEX † Disconnect Mechanism

Disconnect Mechanism	Cable Length	Circuit Breaker Types
FHOE036	36	ED2 ,ED4, ED6, HED4, HED6, ED6ETI
FHOE036	36	CED6, CED6ETI
FHOF036	36	FD6, FXD6, HFD6, FXD6ETI
FHOF036	36	CFD6, CFD6ETI
FHOJ036	36	JD2, JD6, JXD6, HJD6, JXD6ETI, LD6,LXD6, HLD6, LXD6ETI, SHJD6, SLD6, SHLD6
FHOJ036	36	CJD6, CJD6ETI, CLD6, CLD6ETI,SCJD6,SCLD6
FHON048	48	MD6, HMD6, CMD6, MXD6ETI, CMD6ETI, SMD6, SHMD6, SCMD6, ND6, HND6,CND6,SND6,SCND6

* Non-standard mechanism with 48 inch operating cable must be specified.
(1) Flexible operating cable allows disconnect to be mounted within min and max of "C" dimension when "D" is minimum.
(2) Flexible operating cable allows disconnect to be mounted within min and max of "D" dimension when "C" is nominal

The dimensional information provided in this table is derived from information supplied by the manufacturer of the equipment to be installed. Fit and function of all equipment should be checked before and after installation to assure proper and safe operation and compliance with the applicable regulations, codes and standards.

† Marks are the property of their respective owners.

Notes: Flexible cable allows for variable disconnect mounting and adequate wire bending space must be maintained.
Dimensions are in inches. Millimeters shown are for reference only. Data subject to change without notice.

Free-Standing Enclosures

Disconnect Ordering Information
Square D® †

9422 Disconnect Mechanism

Square D† Mechanism for Switches	Amp	Fuse Clip Rating		Fuse Class	Enclosure Height												C		D	
					72				84				90							
					A		B		A		B		A		B					
		Amp	Volt		in.	mm	in.	mm	in.	mm	in.	mm	in.	mm	in.	mm	in.	mm	in.	mm
RC-1	30A	(non)	(non)	--	11.87	301	11.75	298	17.37	441	17.18	436	20.37	517	20.18	513	3.25	83	7.25	184
RC-2	30A	30A	250V	H,K,R	11.87	301	11.75	298	17.37	441	17.18	436	20.37	517	20.18	513	5.00	127	7.25	184
RC-3	30A	30A	600V	H,K,R	11.87	301	11.75	298	17.37	441	17.18	436	20.37	517	20.18	513	8.00	203	7.25	184
RC-3	30A	30A	600V	J	11.87	301	11.75	298	17.37	441	17.18	436	20.37	517	20.18	513	5.00	127	7.25	184
RC-3	30A	60A	250V	H,K,R	11.87	301	11.75	298	17.37	441	17.18	436	20.37	517	20.18	513	6.00	152	7.25	184
TC-1	30A	(non)	(non)	--	11.87	301	9.87	251	17.37	441	15.37	390	20.37	517	18.37	467	5.75	146	6.25	159
TC-2	30A	30A	250V	H,K,R	11.87	301	9.87	251	17.37	441	15.37	390	20.37	517	18.37	467	5.75	146	6.25	159
TC-3	30A	30A	600V	H,K,R	11.87	301	9.87	251	17.37	441	15.37	390	20.37	517	18.37	467	7.75	197	6.25	159
TC-3	30A	30A	600V	J	11.87	301	9.87	251	17.37	441	15.37	390	20.37	517	18.37	467	5.75	146	6.25	159
TC-3	30A	60A	250V	H,K,R	11.87	301	9.87	251	17.37	441	15.37	390	20.37	517	18.37	467	6.00	152	6.25	159
TD-1	60A	(non)	(non)	--	11.87	301	10.75	273	17.37	441	16.25	413	20.37	517	19.25	489	6.50	165	6.75	171
TD-2	60A	30A	600V	H,K,R	11.87	301	10.75	273	17.37	441	16.25	413	20.37	517	19.25	489	8.50	216	6.75	171
TD-2	60A	60A	250V	H,K,R	11.87	301	10.75	273	17.37	441	16.25	413	20.37	517	19.25	489	6.50	165	6.75	171
TD-3	60A	60A	600V	H,K,R	11.87	301	10.75	273	17.37	441	16.25	413	20.37	517	19.25	489	9.00	229	6.75	171
TD-3	60A	60A	600V	J	11.87	301	10.75	273	17.37	441	16.25	413	20.37	517	19.25	489	6.50	165	6.75	171
TE-1	100A	(non)	(non)	--	11.87	301	10.50	273	17.37	441	16.00	406	20.37	517	19.00	483	4.75	121	8.50	216
TE-2	100A	100A	250V	H,K,R	11.87	301	10.50	273	17.37	441	16.00	406	20.37	517	19.00	483	7.50	191	8.50	216
TE-2	100A	100A	600V	H,K,R	11.87	301	10.50	273	17.37	441	16.00	406	20.37	517	19.00	483	9.50	241	8.50	216
TE-2	100A	100A	600V	J	11.87	301	10.50	273	17.37	441	16.00	406	20.37	517	19.00	483	6.25	159	8.50	216
TE-3	100A	200A	600V	J	11.87	301	10.50	273	17.37	441	16.00	406	20.37	517	19.00	483	13.75	349	8.50	216
TF-1	200A	(non)	(non)	--	11.87	301	9.12	232	17.37	441	14.62	371	20.37	517	17.62	448	5.50	140	11.75	298
TF-2	200A	200A	250V	H,K,R	11.87	301	9.12	232	17.37	441	14.62	371	20.37	517	17.62	448	11.50	292	11.75	298
TF-2	200A	200A	600V	H,K,R	11.87	301	9.12	232	17.37	441	14.62	371	20.37	517	17.62	448	14.00	356	11.75	298
TF-2	200A	200A	600V	J	11.87	301	9.12	232	17.37	441	14.62	371	20.37	517	17.62	448	10.25	260	11.75	28
TF-3	200A	400A	600V	J	11.87	301	9.12	232	17.37	441	14.62	371	20.37	517	17.62	448	14.50	368	11.75	298

Square D† Mechanism for Circuit Breakers	Amp	Circuit Breaker Type	Enclosure Height												C		D	
			72				84				90							
			A		B		A		B		A		B					
			in.	mm	in.	mm	in.	mm	in.	mm	in.	mm	in.	mm	in.	mm	in.	mm
RN-1	100A	FAL,FHL,FCL	7.87	200	6.87	174	17.37	441	16.37	416	20.37	517	19.37	492	5.25	133	5.50	140
RP-1	250A	KAL,KHL,KCL	7.87	200	6.62	168	17.37	441	17.12	435	20.37	517	20.12	511	7.25	184	5.75	146
RR-1	400A	LAL,LHL,Q4L	*	*	*	*	17.37	441	12.75	324	20.37	517	15.75	400	7.75	197	9.00	229
RR-2	400A	ILL	*	*	*	*	17.37	441	17.12	435	20.37	517	20.12	511	11.00	279	15.75	400
RT-1	800A	MEL	*	*	*	*	17.37	441	12.62	321	20.37	517	15.62	397	9.25	235	12.00	305
RT-1	1000A	MAL,MHL	*	*	*	*	17.37	441	12.62	321	20.37	517	16.62	422	9.25	235	12.00	305

* Do not install disconnects in this height enclosure.

The dimensional information provided in this table is derived from information supplied by the manufacturer of the equipment to be installed. Fit and function of all equipment should be checked before and after installation to assure proper and safe operation and compliance with the applicable regulations, codes and standards.

† Marks are the property of their respective owners.

Notes: Dimensions are in inches. Millimeters shown are for reference only. Data subject to change without notice.

Free-Standing Enclosures

Disconnect Ordering Information

ALLEN-BRADLEY †

Standard enclosures designed to accept variable depth type 1494V / 1494U.

Allen-Bradley† 1494V / 1494U disconnect switch:

1. Disconnect switch.
2. Operating mechanism.
3. Operating handle.
4. Fuse block kit, (if required).
5. Fuse clip kit, (if required).
6. Line and Load connectors, (if necessary).
7. Connecting rod.

Allen-Bradley† 1494V 1494U circuit breaker:

1. Circuit breaker.
2. Operating mechanism.
3. Operating handle.
4. Line and load connectors, (if necessary).
5. Connecting rod.

NOTE: Standard enclosures designed to accept fixed depth type 1494F or 1494D.

Allen-Bradley† 1494F disconnect switch:

1. Disconnect switch.
2. Operating mechanism.
3. Operating handle.
4. Fuse block kit, (if required).
5. Fuse clip kit, (if required).
6. Line and load connectors, (if necessary).

Allen-Bradley† 1494D circuit breaker:

1. Circuit breaker.
2. Operating mechanism.
3. Operating handle.
4. Line and load connectors, (if necessary).
5. Slide mechanism

CUTLER-HAMMER †

Standard enclosures designed to accept variable depth type C361 or C371.

Cutler-Hammer† C361 disconnect switch:

1. Disconnect switch.
2. Operating mechanism.
3. Operating handle.
4. Fuse clip kit, (if required).
5. Line and load connectors, (if necessary) .

NOTE: Items 1, 2 and 3 can be ordered as an assembly.

Cutler-Hammer† C371 circuit breaker:

1. Circuit breaker.
2. Operating mechanism.
3. Operating handle.
4. Line and load connectors, (if necessary).

NOTE: Items 2 and 3 can be ordered as an assembly.

GENERAL ELECTRIC †

Standard enclosures designed to accept variable depth type TDA.

General Electric† TDA disconnect switch:

1. Disconnect switch, (QMR, QMW).
2. Operating mechanism.
3. Operating handle TDA1.
4. Fuse clip kit or no-fuse kit, (if required).
5. Line and load connectors, (if necessary).
6. Extended length drive rod, (if required).

NOTE: These items can be ordered as an assembly.

General Electric† TDA circuit breaker:

1. Circuit breaker.
2. Operating mechanism.
3. Operating handle TDA1.
4. Line and load connectors, (if necessary).
5. Extended length drive rods, (if required).

I-T-E SIEMENS †

Standard enclosures designed to accept Max-Flex† type FHO.

I-T-E† Max-Flex† circuit breaker:

1. Circuit breaker.
2. Operating mechanism.
3. Operating handle.
4. Line and load connectors, (if necessary).
5. Operating cable.

NOTE: Items 2, 3 and 5 can be ordered as an assembly, standard with a 36 inch long operating cable. All 24 inch deep enclosures require a 48 inch long cable.

† Marks are the property of their respective owners.

Notes: Data subject to change without notice.

Free-Standing Enclosures
Disconnect Ordering Information

SQUARE D †

Standard enclosures designed to accept variable depth type 9422.

Square D† 9422 disconnect switch:

1. Disconnect switch.
2. Operating mechanism.
3. Operating handle.
4. Fuse clip kit, (if required).
5. Line and load connectors, (if necessary).
6. Connecting rod.

Square D† 9422 circuit breaker:

1. Circuit Breaker.
2. Operating mechanism.
3. Operating handle.
4. Line and load connectors, (if necessary).
5. Connecting rod.

Important Note

When ordering flange-mounted disconnect equipment be sure to include all necessary components.

1. Enclosure includes the following equipment:
   Enclosure door locking handle and rods
   Door interlocking system
   Interlocking connecting rod
   Adjustable bracket, (see note 3)
2. Operator adapter plate, gasket and hardware for the type of disconnect device being used MUST be ordered separately (see page 451)
3. 24 inch deep enclosures include an adjustable bracket for mounting some disconnects:
   Cutler-Hammer† C361 device
   Cutler-Hammer† C371 E and F devices unless long connecting rod C371CS1 is specified
   Cutlet-Hammer† C371 G and K devices unless long connecting rod C371CS2 is specified
   General Electric† TDA device unless extended length rod TDSR is specified.
   Square D† 9422 device unless extra long connecting rod 9422-R2 is specified.
4. Disconnects and related components are available from the manufacturer.
5. The disconnect ordering information provided is derived from information supplied be the manufacturer of the equipment to be installed. Fit and function of all equipment should be checked before and after installation to assure proper and safe operation and compliance with the applicable regulations, codes and standards.

† Marks are the property of their respective owners.

Notes: Data subject to change without notice.