LEVITON®

evr-green® 4000

Level 2 Networked Public Use Charging Stations

Whether you are the driver of an EV, a commercial business owner, a utility company or a landlord, Leviton has the charging station for you.

The First
ENERGY STAR®
Certified EV Charger

Evr-Green® 4000

Level 2 Networked Public Use Charging Stations

Integrating design and functionality with superior reliability and durability, Evr-Green® charging stations are ideal for workplace, commercial or outdoor public charging.

Hassle-Free Cord Management

- Self-retracting cord is always off the ground when not in use
- Ultra-reliable second-generation gravity operated mechanism

LCD Display

- Provides animated charging instructions in a clear, simple format
- Readable in daylight with automatic brightness control
- 5.7 inch 640X480 resolution active matrix display
- Full motion 30 fps video support
- Allows for custom video so that you may communicate with your users or deliver special advertising messaging
- Download up to 60 seconds of full-motion, full-color video* (*Cloud plan required)

Multi-Format RFID Card Reader

- Tap-to-pay via the ChargePoint app

Common Applications

- Office buildings
- MDU settings
- Municipalities
- Educational Institutions

c UL us LISTED
Listed by Underwriters Laboratories Inc.

— FEATURING —

chargepoint

NETWORK SERVICES

ChargePoint™ Network Services let you control access, set pricing, display advertising, monitor station status, and generate usage reports while providing 24/7/365 call center support to drivers.

ENERGY STAR

The First ENERGY STAR® Certified EV Charger

Gateway Design

- Removes the need for distance restrictions between chargers
- Stations are configured into optimal radio groups for better communication

Designed for Accessibility

- Buttons provide audio feedback
- Multiple languages supported (English, French, Spanish)

Energy and Power Management

- Dual head stations allow a single 40 A circuit to be shared between two parking spaces
- Power select options to use in a 20 A or 30 A dual pole circuit
- Single vehicle charges at full 6.2/7.2 kW (30 A @ 208/240 V) and two vehicles simultaneously charge at 3.3/3.8 kW (16 A @ 208/240 V) each
- Real-time energy measurement controlled within the modem and communicated through the cloud
- 15 minute interval recordings of energy use and station status
- Time of day (TOD) pricing

Ordering Information

Component Options

Description		Cat. No.
Head Unit	Single Head	CPHU1
	Dual Head	CPHU2
Mounting Mechanism	Free-Standing Body	CPMBX
	Wall Mounting Body	CPMEX
Mount Cap	Free-Standing Cap	CPCAP-B
	Wall Mount Cap	CPCAP-W
Cable Management Assembly (for use with Single Port or Dual Port Stations)		CPCBX
Concrete Mounting Kit (for Free-Standing Mounting Versions)		CPCMK

Typical Configurations

Description	Components
Single Head Free-Standing	CPHU1, CPMBX, CPCAP-B, CPCBX, CPCMK
Dual Head Free-Standing	CPHU2, CPMBX, CPCAP-B, CPCBX, CPCMK
Single Head Wall Mount	CPHU1, CPMEX, CPCAP-W, CPCBX
Dual Head Wall Mount	CPHU2, CPMEX, CPCAP-W, CPCBX

Service Plans

Cloud Services*

AVAILABLE PER PORT

- Set pricing and manage driver access
- Manage stations from a desk or cellphone with real-time dashboards and maps
- Power Management software reduces installation costs, lowers ongoing electricity costs and lets you charge more vehicles
- Charts and analytics summarize trends for planning and management reporting
- Waitlist notifies drivers and holds a charging spot when one becomes available

Description	Cat. No.
2-Years of Cloud Coverage	CPCY2
3-Years of Cloud Coverage	CPCY3
4-Years of Cloud Coverage	CPCY4
5-Years of Cloud Coverage	CPCY5

*1-Year of Cloud Coverage is included with purchase

Assure Warranty*

AVAILABLE PER STATION

- Covers labor for repairs from events such as vandalism, abuse and accidents
- 24/7 proactive station health monitoring
- Proactive dispatch of repair technicians when required
- Unlimited software configuration changes
- Monthly reports and detailed quarterly reports of station's performance metrics (utilization, performance, energy usage, etc.)

Description	Cat. No.
1-Year Assure Warranty	CPWY1
2-Year Assure Warranty	CPWY2
3-Year Assure Warranty	CPWY3
4-Year Assure Warranty	CPWY4
5-Year Assure Warranty	CPWY5
Site Validation (required with all Assure purchases)	CPVAL

*1-Year of basic parts warranty is included with purchase

FREE-STANDING STATIONS

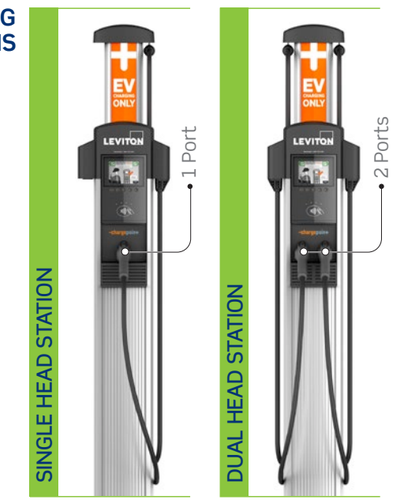

WALL MOUNT STATIONS

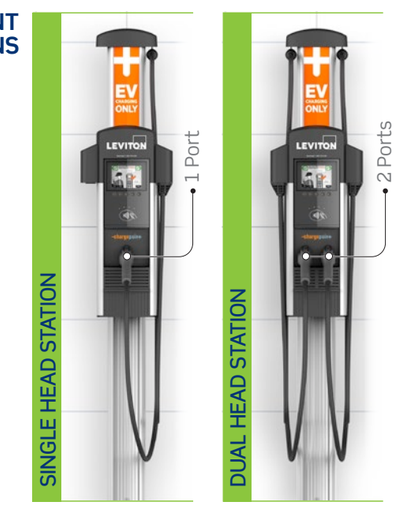

Specifications

Electrical Input	Single Port	Dual Port
AC Power Input Rating – Standard	208/240 VAC 60 Hz single phase @ 30 A	208/240 VAC 60 Hz single phase @ 30 A x 2
AC Power Input Rating – Power Sharing	n/a	208/240 VAC 60 Hz single phase @ 32 A
Input Power Connections – Standard	One 40 A branch circuit	Two independent 40 A branch circuits
Input Power Connections – Power Sharing	n/a	One 40 A branch circuit
Required Service Panel Breaker – Standard	40 A dual pole (non-GFCI type)	40 A dual pole (non-GFCI type) x 2
Required Service Panel Breaker – Power Sharing	n/a	40 A dual pole (non-GFCI type)
Service Panel GFCI	Do not provide external GFCI as it may conflict with internal GFCI (CCID)	
Wiring – Standard	3-wire (L1, L2, Earth)	5-wire (L1, L1, L2, L2, Earth)
Wiring – Power Sharing	n/a	3-wire (L1, L2, Earth)
Station Power	8 W typical (standby), 15 W maximum (operation)	
Electrical Output		
AC - Standard	7.2 kW (240 VAC @ 30 A)	7.2 kW (240 VAC @ 30 A) x 2
AC - Power Sharing	n/a	7.2 kW (240 VAC @ 30 A) x 1 OR 3.8 kW (240 VAC @ 16 A) x 2
Functional Interfaces		
Connector(s) Type	SAE J1772™	SAE J1772™ x 2
Charging Cable Length	18' (5.5 meters)	18' (5.5 meters) x 2
LCD Display	5.7" full color, 640x480, 30 fps full motion video, active matrix, UV protected	
Card Reader	ISO 15693, 14443, NFC	
Safety and Connectivity Features		
Ground Fault Detection	20 mA CCID with auto retry	
Open Safety Ground Detection	Continuously monitors presence of safety (green wire) ground connection	
Plug-Out Detection	Power terminated per SAE J1772™ specifications	
Power Measurement Accuracy	+/- 2% from 2% to full scale (32 A)	
Power Report/Store Interval	15 minute, aligned to hour	
Local Area Network	2.4 GHz Wi-Fi (802.11 b/g/n)	
Wide Area Network	LTE Category 4	
Safety and Operational Ratings		
Enclosure Rating	Type 3R per UL 50E	
Safety Compliance	UL listed for USA and cUL certified for Canada; complies with UL 2594, UL 2231-1, UL 2231-2, and NEC Article 625	
Surge Protection	6 kV @ 3000 A. In geographic areas subject to frequent thunder storms, supplemental surge protection at the service panel is recommended.	
EMC Compliance	FCC Part 15 Class A	
Operating Temperature	-40°F to 122°F (-40°C to 50°C)	
Operating Humidity	up to 85% @ +50°C (122°F) non-condensing	
Non-Operating Humidity	up to 95% @ +50°C (122°F) non-condensing	
Terminal Block Temperature Rating	221°F (105°C)	
Additional Services		
Service Plans	Includes 1-year parts warranty; See additional service plans on previous page	
Country of Origin		
Country of Origin	Mexico	

NOTE: All 4000 series stations require a network service plan per port.
A 1-year prepaid commercial cloud plan is included.

ChargePoint, Inc. reserves the right to alter product offerings and specifications at any time without notice, and is not responsible for typographical or graphical errors that may appear in this document.

Dimensions

Free-Standing Stations

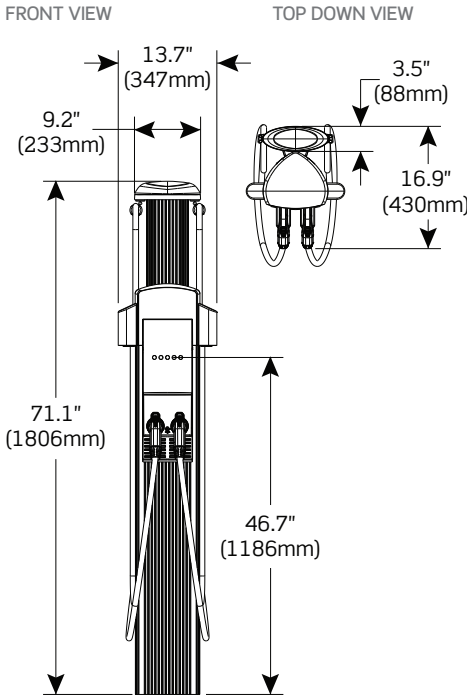

Wall Mount Stations

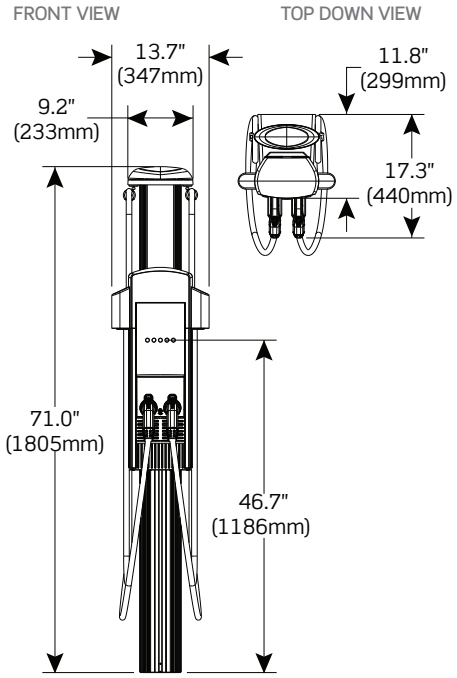

Visit our Website at:
leviton.com/evrgreen
email: evrgreen@leviton.com

Leviton Manufacturing Co., Inc.
201 N Service Rd, Melville, NY 11747
Telephone: 1-800-323-8920 • FAX: 1-800-832-9538
Tech Line: 1-800-824-3005 (M-F 8AM-10PM; Sat 9AM-7PM; Sun 9AM-5PM)

© 2022 Leviton Manufacturing Co., Inc. All rights reserved.