miniZ User's Guide

Daylight Harvesting Made Simple.

This user's guide applies to the following part numbers:

Model Number	Description	0-10V Outputs	Relay Outputs
mZb00-102	Basic Version, 2 Zone, 2 Relay, 120V or 277V	0	2
mZd20-102	Dimmed Version, 2 Zone, 2 Relay, 120V or 277V	2	2
mZd30-101	Dimmed Version, 3 Zone, 1 Relay, 120V or 277V	3	1
mZb00-C02	Basic Version, 2 Zone, 2 Relay, 347V	0	2
mZd20-C02	Dimmed Version, 2 Zone, 2 Relay, 347V	2	2
mZd30-C01	Dimmed Version, 3 Zone, 1 Relay, 347V	3	1

Features between models vary. As such, not all information in this manual applies to all models.

Revision A 5/2007

WEB VERSION

NOTES

WEB VERSION

TABLE OF CONTENTS

STEP 1	PHYSICAL INSTALLATION	2
STEP 2	CONNECT LINE VOLTAGE	4
STEP 3	CONNECT LOW VOLTAGE	6
STEP 4	CONNECT LOW VOLTAGE	8
STEP 5	CONFIGURATION DIP SWITCH SETTINGS – BLOCK ONE	10
STEP 6	CONFIGURATION DIP SWITCH SETTINGS – BLOCK TWO	12
STEP 7	CONFIGURATION DIP SWITCH SETTINGS – BLOCK THREE	15
STEP 8	CONFIGURATION TRIM POT SETTINGS	16
STEP 9	NOTES: DAYLIGHTING CONFIGURATION	18
STEP 10	NOTES: BURN IN & AUTO CAL FEATURES	19
	WARRANTY	20
	DEFAULT TABLES	23

WEB VERSION

MOUNTING FEATURES

The Power Pack is suitable for plenum use, indoor only, 0 - 40°C, 5 - 95% humidity without condensation. The supply circuit and load circuits of the miniZ Power Pack are pre-wired to the control board. Color coded lead wires are provided for quick connections in a junction box. One ½" nipple is provided on the top of the Power Pack for this purpose.

There are three concentric knockouts provided in the Low Voltage Compartment of the miniZ Power Pack. They are combination ½" and ¾" knockouts. There is one on each of the three external sides of the area.

ENCLOSURE FEATURES

The enclosure of the miniZ Power Pack is divided into two compartments. The Low Voltage Compartment is accessible through the cover-plate. The High Voltage Compartment is factory sealed and is not accessible.

WEB VERSION

PHYSICAL INSTALLATION

High Voltage Compartment
This area cannot be accessed in the field. Lead wires exit the compartment through the top of the enclosure. There are leads supplied for field connections to circuits that energize the miniZ Power Pack and feed the fluorescent fixture circuits.

Nipple
The fitting on the top of the miniZ Power Pack attaches directly to a junction box or enclosure. Two 0.2" mounting holes through the back of the miniZ low voltage compartment, provide secure fastening to any flat surface.

All connections are for copper wire only.

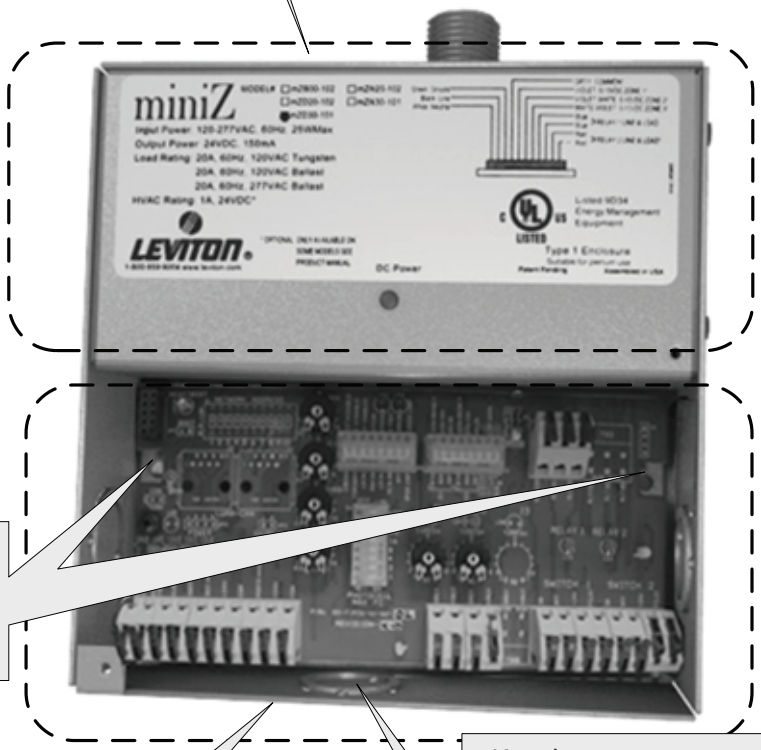

Mounting Holes
Two mounting holes are provided to fasten the miniZ Power Pack in place.

Low Voltage Compartment
This area contains all of the low voltage terminations required in the field. All of the configuration settings are made in this area as well. Class 2 wiring only.

Knockouts
There are three concentric knockouts provided in the Low Voltage Compartment of the miniZ Power Pack. They are combination ½" and ¾" knockouts. There is one on each of the three external sides of the area.

WEB VERSION

STEP 2 CONNECT LINE VOLTAGE

Relay 1 Line/Load

Ratings: 20A at 120VAC Tungsten/Ballast
20A at 277VAC Ballast
15A at 347VAC (347V Models Only)
Normally Open, Electrically held.

Color Code: Blue – Line, 12 AWG
Blue – Load, 12 AWG

Control Power Circuit

Voltage Rating: 120 – 277VAC, or
200-347VAC on 347V Models Only

Color Code: Black – Line, 120 – 277VAC, 18 AWG
(120-277V Models Only)
White – Neutral, 18 AWG
Orange – 347VAC, 18 AWG
(347V Models Only)

Load Rating: 10W

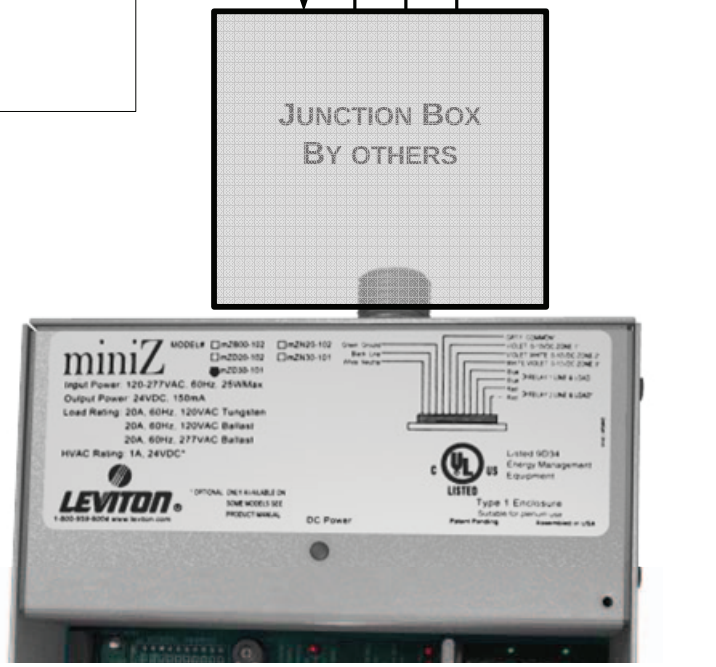

SUPPLY CIRCUITS

The Feed Circuit, Relay 1 Line, and Relay 2 Line can be supplied by the same circuit or individually. The connections are made in the junction box.

All supply circuits must be provided with a 20A or less branch circuit overcurrent protection device. Branch circuit protection for 347V circuits should be rated at 15A.

WEB VERSION

CONNECT LINE VOLTAGE

Relay 2 Line/Load

Ratings: 20A at 120VAC Tungsten/Ballast
20A at 277VAC Ballast
15A at 347VAC (347VModels Only)
Normally Open, Electrically held.

Color Code: Red – Line, 12 AWG
Red – Load, 12 AWG

Not available on three zone models.

Zone Common

Color Code: Gray – 22 AWG
Not available on Basic Model

Zone 1 Analog Output 0 – 10VDC

Color Code: Violet – 22 AWG
Not available on Basic Model

Zone 2 Analog Output 0 – 10VDC

Color Code: Violet w/White stripe – 22 AWG
Not available on Basic Model

Zone 3 Analog Output 0 – 10VDC

Color Code: White w/Violet stripe – 22 AWG
Only available on Three Zone Model

These circuits must be insulated from the other wiring even when they are not being used. Cap off and tape any unused wires.

WEB VERSION

STEP 3 CONNECT LOW VOLTAGE

A Occupancy Sensor Disabled / Emergency Input

Label: OCC DISABLE / EMERGENCY
Set by DIP Switch: Block 1 Number 1

This is a +24V input signal. Function can be set to either mode exclusively.

Occupancy Disable Mode

When the input goes high (+24V) the Power Pack will disable the Occupancy Sensor input and there will be no change in the current state. When the input signal is removed, the Occupancy Sensor will return to the normal mode.

Emergency Mode

Emergency mode is triggered when the emergency input is connected to the common. When the signal is received, the Power Pack will turn on all zones by turning on all relays and raising any 0 – 10V outputs to 10 V. The Power Pack zones will remain fully illuminated until the Emergency signal is removed.

B Photocell Disable / Force Off Input

Label: PC DISABLE / FORCE OFF
Set by DIP Switch: Block 1 Number 2

This is a +24V input signal. Function can be set to either mode exclusively.

Photocell Disable Mode

When the input goes high (+24V) the Power Pack will disable the Photocell input, along with daylight operation, and there will be no change in the current state. The On switch functionality, when the photocell is disabled, turns lights on to the maximum level. When the input signal is removed, the Photocell will return to the normal mode.

Force Off Mode

When the input goes high (+24V) the Power Pack will turn off all zones. The Power Pack zones will remain fully off until the Force Off signal is removed.

C Time Clock Input

Label: CLOCK

This signal will originate from a supervisory time clock system and is a +24V input signal. When the input goes high (+24V) the Power Pack will turn off all zones. If the Blink Warn function has been configured, the Power Pack will trigger the Blink Warn cycle. If a switch is used to turn on the lights during a period that the time clock has the lights off, the system will go into a Blink Warn override mode.

If both the Occupancy Sensor and the Time Clock inputs are used, an active (+24 VDC) signal at the Time Clock input only has the affect of changing an Auto On configuration to a Manual On.

D Load Shed Input

Label: SHED

This signal would originate from an energy management system and is a +24V input signal. When the input goes high (+24V) the Power Pack will reduce the output load levels based upon the position of the Shed trim pot.

In the event that you are in daylighting mode and less artificial light is required to meet the target than is required by load shed, the lights will remain at the lower lighting level – meeting the target.

WEB VERSION

E Occupancy Sensor Input

Label: OCC, +24V, COM

This three position terminal block is dedicated to the connection of the Occupancy Sensor. The Occupancy Sensor signal wire connects to the OCC terminal. This +24V source is shared with all circuits supplied from the +24V power supply rated to a maximum of 120 mA.

F Photocell Input

Label: PHOTO, +24V, COM

This three terminal block is dedicated to the connection of the Photocell. The Photocell signal wire connects to the PHOTO terminal. This +24V source is shared with all circuits supplied from the +24V power supply rated to a maximum of 120 mA.

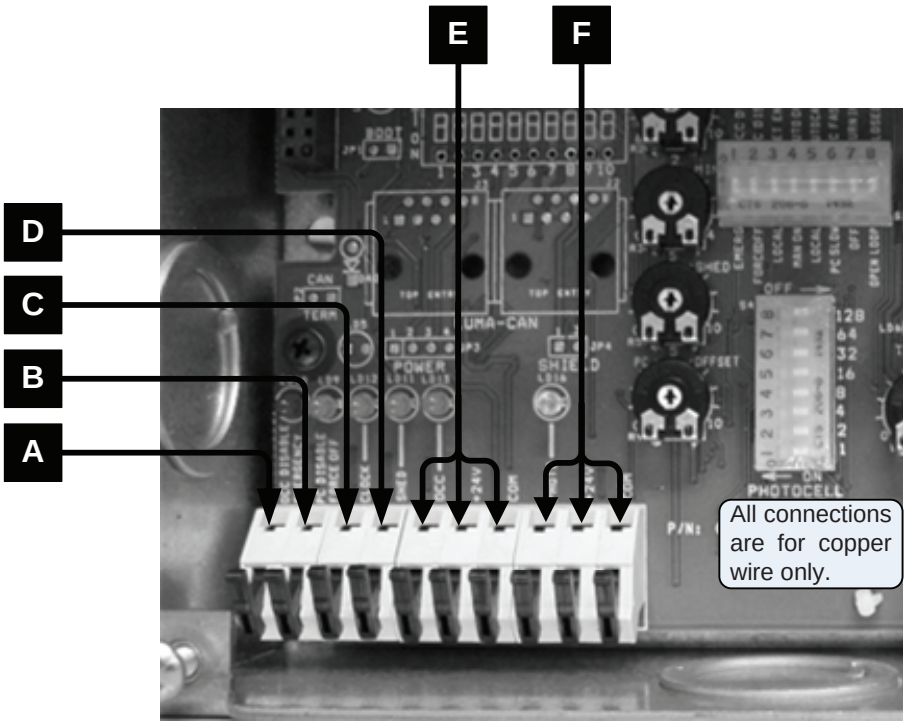

WEB VERSION

STEP 4 CONNECT LOW VOLTAGE

G Emergency / HVAC

Label: RLY COM, RLY N/O, RLY N/C

There is one Low Voltage relay output rated for 1A @ 24V which can be switched between HVAC and Emergency output functionality. This terminal block is connected to the Emergency Output / HVAC relay.

Jumper Settings

A three (3) position pin header is located adjacent to the terminal block. The jumper configuration of this header determines the functionality of the relay.

HVAC

A jumper between pins 1 and 2 will result in HVAC functionality. In this mode the relay will change state when the room is occupied. In occupied state NO (normally open) contact is closed.

Emergency

A jumper between pin 2 and 3 will result in Emergency output functionality. In this mode the relay will change state when an Emergency Input signal is detected. In normal, non-emergency state the NO (normally open) contact is closed.

H Zone Control Outputs

Label: GREY- Common
VIOLET – Signal 0 – 10V

These terminals provide an alternate location for connecting to the dimming ballast control circuit. There can be up to three pairs of these terminals depending on the model of miniZ Power Pack. The dimming circuit provides the analog output to control up to 100 dimming ballasts. The basic version of the miniZ Power Pack does not have any of these terminals.

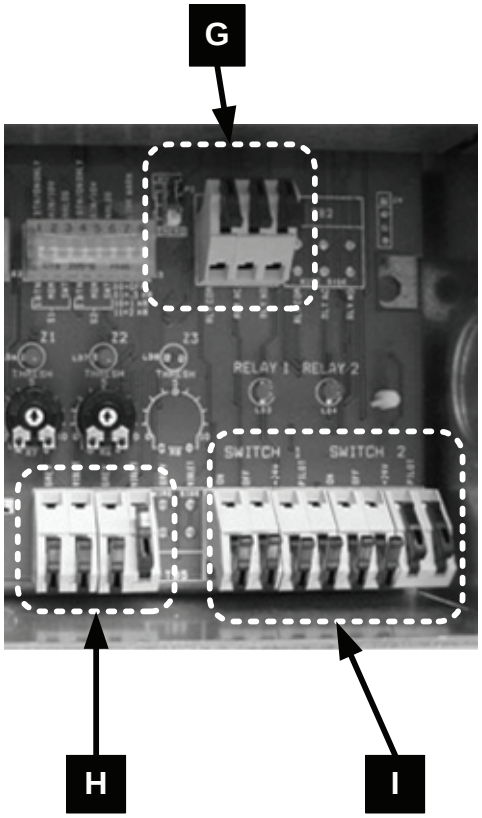

WEB VERSION

I Low Voltage Switch Inputs

Label: SWITCH 1; ON, OFF, +24V, PILOT
SWITCH 2**; ON, OFF, +24V, PILOT
**not available on all models

There is a maximum of two low voltage switch inputs depending on the model. Switch 1 provides control for Zone 1 and Switch 2 provides control for Zone 2. There is only one Switch input for the three Zone model.

Switch Types

Set by DIP Switch: Block 2 Number 1

There are two general types of switch inputs; analog and switched.

Analog

In analog mode, the input is expecting to see a 0 – 24 VDC or a 0 – 10 VDC signal which is used to dim the light levels proportionately to the level of the analog input.

Switched

In the switched mode, the input is expecting to see a +24 VDC level to indicate that a switch is closed.

One Button Mode

The switch connected to these terminal blocks uses the same button to turn on and turn off the lights. Push the button once to turn on, push the button a second time to turn off. The button signal wire should be connected to the On terminal. No wire is required at the Off terminal.

Two Button Mode

The switch connected to these terminal blocks uses two different buttons to turn on and turn off the lights. Push one button to turn on, push a different button to turn off. The signal wires from each of the buttons should be connected to their associated terminals.

Supply

The +24V source terminal supplies the power required to energize the Low Voltage switch circuit. This source is shared with all circuits supplied from the +24V power supply to a maximum of 120 mA.

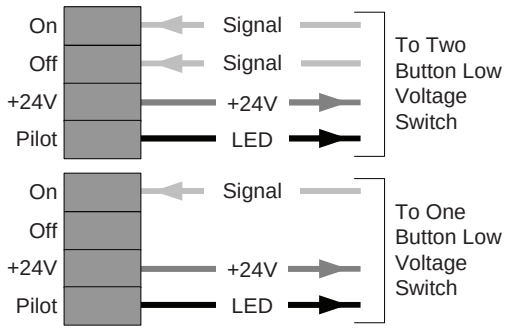

LOW VOLTAGE SWITCH CONNECTIONS

Switch Connections

For a complete description of switch behaviors refer to the Settings section. Wiring of the Low Voltage switch must match the manufacturer recommendations.

Pilot

This is the Pilot light output. To illuminate the button on the Low Voltage switch, connect the appropriate wire from the switch to the Pilot terminal. If the button does not require illumination no wire will be present. The Pilot output connects to common to turn on the pilot light in your control device.

WEB VERSION

Emergency / Occupancy Sensor Disable

DIP Switch: Block 1 Switch 1
Label: EMERG / OCC DISABLE

This configures the response to a signal (+24V) at the OCC Disable/Emergency input terminal. If the switch is in the off position (EMERG), the response to a connection to common will be to turn all relays on and raise all 0 – 10V outputs to ten volts. During this condition no other control will have any effect over the outputs. If this switch is set to on (OCC DISABLE), the Occupancy Sensor will be disabled and no change in the current zone state will occur when +24VDC is received by the input. When the signal is removed, the Power Pack will return to normal operation.

Force Off / Photocell Disable

DIP Switch: Block 1 Switch 2
Label: FORCE OFF / PC DISABLE

This configures the response to a signal (+24V) at the PC Disable/Force Off input terminal. If the switch is in the off position, the response will be to turn all zones off by turning all relays off and lowering any 0 – 10V outputs to zero volts. If the setting is on, a signal (+24V) will disable the Photocell allowing normal operation. The load shed function, however, will be disabled. When the signal is removed, the Power Pack will return to normal operation.

Local / Network Enabled

DIP Switch: Block 1 Switch 3
Label: LOCAL / NET ENABLED

The models covered by this manual do not have network capability. This switch should remain in the off position.

Manual On / Auto On

DIP Switch: Block 1 Switch 4
Label: MAN ON / AUTO ON

This switch determines the response to the Occupancy Sensor and the Time Clock signals. In the off position (MANUAL ON) the Power Pack will turn on zones only with a switch input and the Occupancy Sensor or the Time Clock input signal will turn the lights off. When in Manual On mode, if the lights are turned off by the Occupancy Sensor input signal, there is a 30 second grace period in which detected movement will turn them back on. The lights will turn on only by the MANUAL ON switch, not by the occupancy sensor.

With this switch In the on (AUTO ON) position the Power Pack will turn on and off zones in response to signals from the Occupancy Sensor or the Time Clock inputs.

If both the Occupancy Sensor and the Time Clock inputs are used, an active (+24 VDC) signal at the Time Clock input only has the affect of changing an Auto On configuration to a Manual On.

WEB VERSION

Local / Auto Cal

DIP Switch: Block 1 Switch 5
Label: LOCAL / AUTO CAL
The setting activates the Auto Calibration cycle. For more information, see the discussion on the Auto Calibration feature on page 21.

Photocell Slow Response / Fast Response

DIP Switch: Block 1 Switch 6
Label: PC SLOW / PC FAST

This setting determines the speed at which the system will respond to changes in light levels detected by the Photocell. In the off position (PC Slow), the response time will be 30 minutes. In the on position (PC Fast), the response time will be 30 seconds.

Burn In

DIP Switch: Block 1 Switch 7
Label: BURN IN / OFF

This setting activates the Burn In feature. Lamp burn in may be desired for new fluorescent lamps. This feature keeps lamps from dimming for a period of 100 run hours.

Open Loop / Closed Loop

DIP Switch: Block 1 Switch 8
Label: OPEN LOOP / CLOSED LOOP

The switch determines whether the power pack should operate in open loop or closed loop daylight harvesting mode. In closed loop mode, the photocell should be sensing the amount of ambient or task light in the room. In open loop mode, the photocell should be sensing the amount of light coming in through the skylight or windows. For details on the two methods of operation, please see the discussion on page 20.

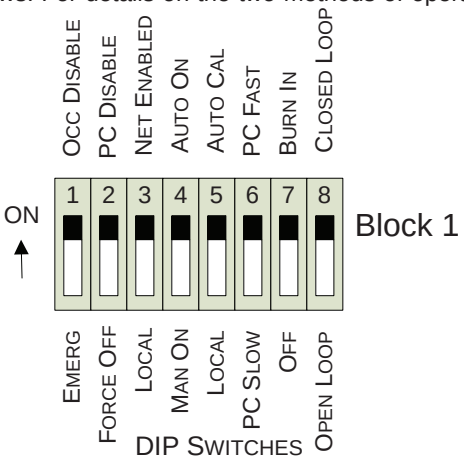

(SWITCHES SHOWN IN THE ON POSITION – REFER TO PAGE 23 FOR DEFAULT SETTINGS)

WEB VERSION

STEP 6 CONFIGURATION DIP SWITCH SETTINGS – BLOCK TWO

BLOCK 2 - DIP SWITCHES
(SWITCHES SHOWN IN THE ON POSITION)

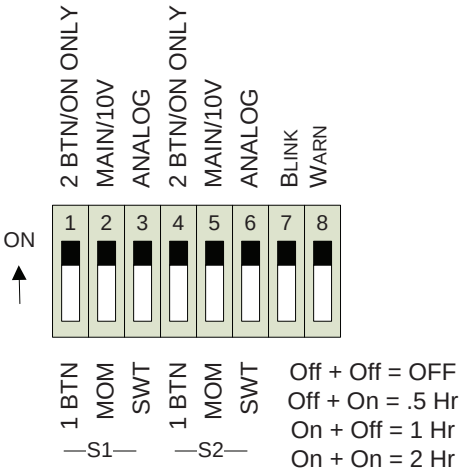

SWITCH INPUT TYPES

Set by DIP Switches: Block 2 Number 3 and/or Number 6

Settings: ON = Analog, OFF = Switched

There are several modes of switch inputs; analog and switched. In analog mode there is only one behavior. In Switch mode there are four modes of operation for input switches.

SWITCHED MODE BEHAVIOR

One Button Momentary Mode (Z-Max Low Voltage Switches)

Set by DIP Switch: Block 2 Number 1 and/or Number 4 = Off
Block 2 Number 2 and/or Number 5 = Off
Block 2 Number 3 and/or Number 6 = Off

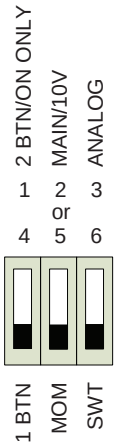

Connections: In this mode, the ON input is used to both turn on and turn off the zone. The switch should be wired so that the ON signal wire is landed on the ON terminal.

Dimming Unit Behavior: Activating the ON signal input with a +24 VDC level shall cause the associated zone to fade the lights to the daylighting target level over three (3) seconds. If daylighting is not active in the space, this function will fade the lights to the level of the maximum trim pot. If the zone is already on, then the lights will fade to off over one (1) second. If the zone is off, tapping the button shall turn it on.

Units that have dimming available and activated shall dim the zone on and off. Tapping the button shall fade the zone up to full in three (3) seconds. Tapping the button shall fade the zone down to off in one (1) second. If the button is held, dimming shall continue until either maximum or minimum is established or the button is released. When holding the button, both up and down fade shall be three seconds.

WEB VERSION

One Button Maintained Mode (Toggle Switch)

Set by DIP Switch: Block 2 Number 1 and/or Number 4 = Off
Block 2 Number 2 and/or Number 5 = On
Block 2 Number 3 and/or Number 6 = Off

Connections: In this mode, the ON input is used to both turn on and turn off the zone. The switch should be wired so that the ON signal wire is landed on the ON terminal.

Behavior: If the input is active (+24 VDC at the input), the zone is on, if it is inactive (0 VDC), the zone is off.

Units that have dimming available and activated shall dim the zone on and off. Activating the input shall fade the zone up to full in three (3) seconds. Activating the input shall fade the zone down to off in one (1) second.

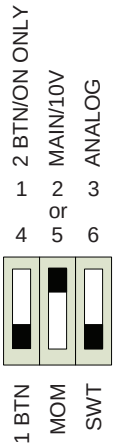

Two Button Mode (GE Switches, Leviton LV240 Switches)

Set by DIP Switch: Block 2 Number 1 and/or Number 4
Settings: ON

Connections: In this mode the switch should be wired so that the ON signal wire is landed on the ON terminal. The OFF signal wire should be connected to the OFF terminal. The switch common will be fed from the +24 VDC terminal. Activating the ON signal input with a +24 VDC level shall cause the associated zone to turn on. Activating the OFF button input shall turn the zone off.

Behavior: Tapping the ON button shall fade the lights to the daylighting level over three (3) seconds. If daylighting is not active in the space, the ON button fades the levels to the level of the maximum trim pot. Tapping the OFF button shall fade to off the lighting in the zone over one (1) second. If either button is held, dimming shall continue until either maximum or minimum is established or the button is released. While held, dimming is three (3) seconds in both directions.

Two Button Mode (On Only)

Set by DIP Switch: Block 2 Number 1 and/or Number 4
Settings: ON

Connections: In this mode the switch should be wired so that the ON signal wire is landed on the ON terminal. The OFF signal wire should not be connected. The switch common will be fed from the +24 VDC terminal. Activating the ON signal input with a +24 VDC level shall cause the associated zone to turn on.

Behavior: There are some cases when it is desirable to allow zones to be turned on manually, but not off. The off function is controlled by an occupancy sensor or time clock. This is accomplished by configuring the input in two button mode and only using the ON input.

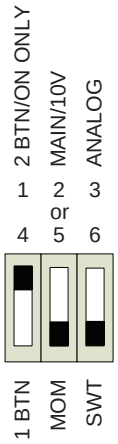

WEB VERSION

Special Function Leviton Switches (LV200, LV220, LV221, and LV240)

Set by DIP Switch: Block 2 Number 1 & 2 or Number 4 & 5

Settings: ON

Connections: In this mode the switches should be wired so that the ON, OFF, PILOT, +24V, and COM wires are connected.

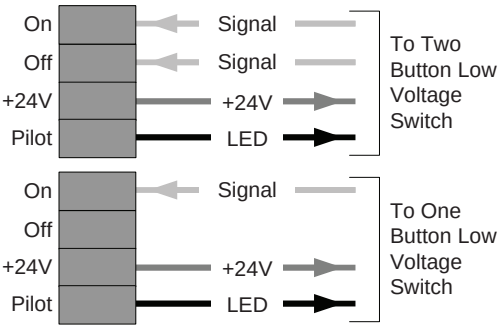

LOW VOLTAGE SWITCH CONNECTIONS

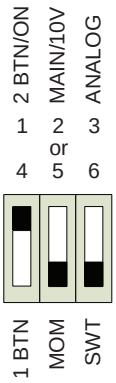

LV200, LV220, LV240

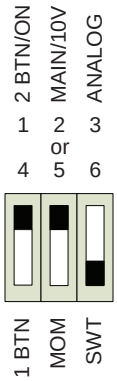

LV221

BLINK WARN OVERRIDE TIME

Set by DIP Switch: Block 2 Number 7
Block 2 Number 8

Behavior: This setting determines the length of time the zones will remain on once the blink warn feature is activated and a request for the override has been received. This request can be made by pressing the On button at the low voltage switch. Pilot output will flash on and off to indicate blink warn is active. Overriding blink warn by tapping the On button will stop the flashing.

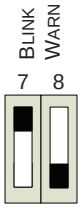

Off + Off = OFF
Off + On = .5 Hr
On + Off = 1 Hr
On + On = 2 Hr

WEB VERSION

ANALOG MODE BEHAVIOR (LEVITON LV230 SWITCHES)

Set by DIP Switch: Block 2 Number 3 and/or Number 6
Settings: ON = Analog

Set by DIP Switch: Block 2 Number 2 and/or Number 5
Settings: ON = 0 – 10 VDC, OFF = 0 – 24 VDC

Connections: In this mode, the ON input is connected to +0 – 10 VDC or +0 – 24 VDC varying input. The OFF input is connected to a maintained contact, indicating whether the lights should be on of off. Input impedance is 85k ohms.

Behavior: Analog mode allows for a dimmed override to be applied allowing the user to set the temporary dimmed level of the lights via a slider or other such input device. In this mode, the miniZ expects either +0 – 10 VDC or +0 – 24 VDC at the ON input, which indicates the dimmed level, and a maintained input to the OFF terminal indicating whether the lights should be on or off. When using the miniZ in a daylighting operation, the dimmed level is a temporary override. **After the override time (60 minutes) has elapsed, the device will automatically return to daylight harvesting mode**.

The input can be set for two different voltage ranges. When in this mode, a 0 VDC level signal represents off, while a +24 VDC (or +10 VDC) level represents full on. The zone is dimmed proportionally between these levels.

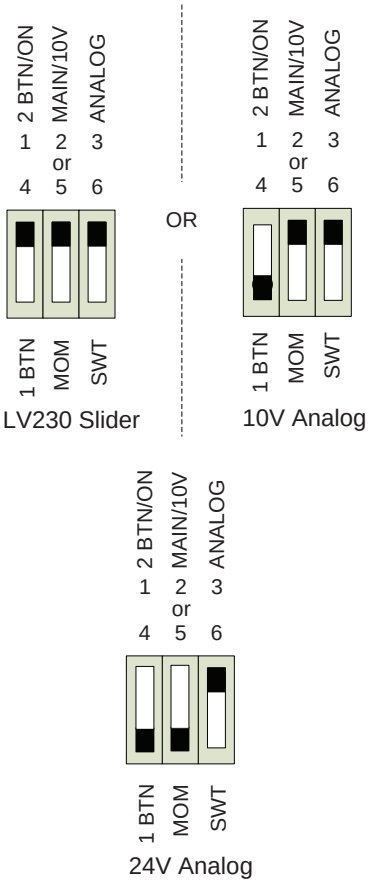

WEB VERSION

STEP 6

WEB VERSION

DIP Switch Block 3

Photocell Maximum Foot Candle DIP Switch
(PHOTOCELL MAX)
Set by DIP Switch: Block 3 Number 1 to 8

Application – Open Loop Daylight Harvesting ONLY

This 8 position DIP switch is used to set the maximum foot candle value of the photocell being used with the system. The switches shall represent the binary number 0 - 255. The foot candle value is the sum of the switch values multiplied by 10. The system can accommodate photocells with a range of 0 to 2550 foot candles in increments of 10. From this setting the miniZ Power Pack determines the foot candles per volt.

Default

The default setting for this switch is 7 (0-70 foot candles).

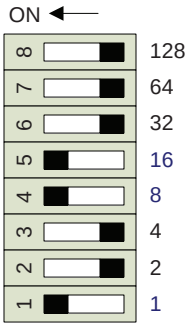

Block 3
(TOTAL VALUE SHOWN IS 25)
(16+18+1)

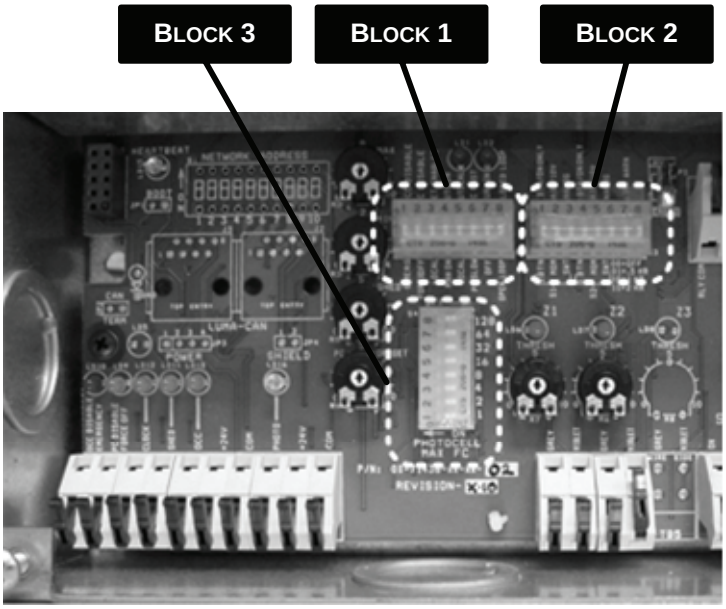

DIP SWITCH BLOCK LOCATIONS

WEB VERSION

STEP 8 CONFIGURATION TRIM POT SETTINGS

1 MAXIMUM TRIM POT (MAX)

Adjust this trim pot to set the upper limit for the 0 – 10 VDC Ballast outputs. The full range of the pot adjusts the upper limit in a range from 6 volts to 10 volts.

Default
The default position is full on (counterclockwise).

2 MINIMUM TRIM POT (MIN)

Adjust this trim pot to set the minimum level the 0 – 10 VDC outputs will dim during daylight harvesting mode operation. The full range of the pot adjusts the lower limit in a range from 0 volts to 4 volts.

Default
The default position is full off (clockwise).

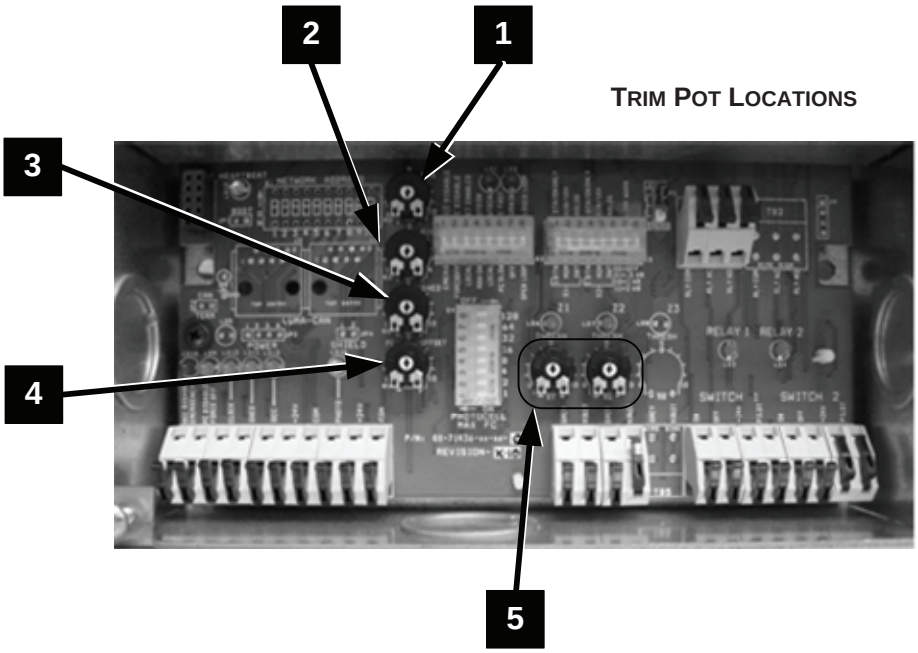

TRIM POT LOCATIONS

WEB VERSION

3 LOAD SHED TRIM POT (SHED)

Adjust this trim pot to determine the action taken when the LOAD SHED (SHED) input is active.

Application

For the basic model, if the pot is positioned between 0 – 30%, relay 1 will be forced off, if set between 30 – 70%, both relays will be forced off, and if set between 70 – 100%, relay 2 will be forced off.

For dimmed models, all 0 – 10 VDC outputs will go to the level determined by the position of the Load Shed pot if it is currently higher than that level. If the Load Shed pot is adjusted above the Max pot, no change shall occur.

Default

The default position is center.

5 DAYLIGHT HARVESTING THRESHOLD TRIM POT (THRESH)

On dimmed models, these trim pots will be used to determine the amount of daylight control that is applied to each zone. The full range of rotation represents 0 – 100% of the photocell's foot candle range. The procedure for adjusting these trim pots is different depending upon whether the miniZ has been set to operate as an open- or closed-looped system. In open loop, if daylight harvesting is not desired, turning the pots full (100%) shall disable the feature and the lights on the zone will stay on at the Max level.

In closed loop, the Threshold trim pot has the added functionality that it can be used to exclude a zone from dimming, as it relates to daylight harvesting operation, by setting it to a value of less than 5%.

Default

The default position is full on (clockwise).

4 DAYLIGHT HARVESTING OFFSET TRIM POT (OFFSET)

Dimmed Model, Open Loop

In Open Loop mode, the Offset trim pot is used to enter the desired foot candle value from 0 – 100 foot candles, at the photocell. A setting of 0 equals 0 foot candles, a setting of 10 equals 100 foot candles.

Dimmed Model, Closed Loop

In Closed Loop mode, the Offset trim is used to set the target photocell values. The trim pots scale of 0 – 10 represents the 0 – 10 volt signal of the photocell. If, however, you are using Auto Calibration, the Offset trim pot defines the Light Loss Factor (LLF) applied to the target level. The LLF is 20% when the trim pot is set at 0 and 0% when the trim pot is at 10. The assumption is that auto calibration occurs when the lamps are new, the fixtures are clean, and the room is performing to the initial lumen output not the maintained lumen output. When the Offset trim pot is set to 0, the LLF is set to 20%. When the Offset trim pot is set to 10, the LLF is 0%.

Basic Model

On the basic model this trim pot sets the point that Relay 1 is opened. The photocell must remain on either side of the trip point for the time determined by the Photocell Fast/Slow DIP switch setting before changing states.

WEB VERSION

STEP 9 NOTES: DAYLIGHTING CONFIGURATION

Setup

To setup your device in either open loop or closed loop mode, please reference Step 5, Settings, found on page 11 of this document. This section details with specific calibration and configuration of your miniZ device when in each of these modes.

Open-Loop Operation

Typical open-loop systems employ a photocell positioned towards the daylight source (window, skylight, etc).

Important! For best results, the photocell should receive as little electric light as possible.

To determine the setting of each of the PC Level trim pots, light meter readings must be taken during the day with the electric lights off and during consistent daylight (i.e. if a cloud covers the sun during meter recording, start over or wait for the cloud to pass). Position the light meter at the photocell, pointing it in the same direction as the photocell. Record the value. Next position the light meter at the work surface in the room pointing it towards the ceiling. Record the value.

Now calculate the ratio of the zone value to the photocell value for each room. Use the chart below to determine the PC Level setting. For example, if the photocell reading is 400 foot candles and Zone reading is 50 foot candles, the ratio is 50/400 = 0.125 (50 ÷ 400 = 0.125). Find 0.125 on the chart's x-axis (Room/Photocell Ratio) and follow a straight line up until the diagonal line it intersected. Then follow a straight line to the left on the chart to obtain the trim pot setting. In this case the setting would be 7.

Closed-Loop Operation

Closed-loop systems position the photocell so that it measures the amount of light in the room being controlled. It is important to correctly position the photocell so that it receives either the average amount of ambient light or if sensing task lighting that it is directed at a surface which will reflect an appropriate representation of the amount of task lighting in the room.

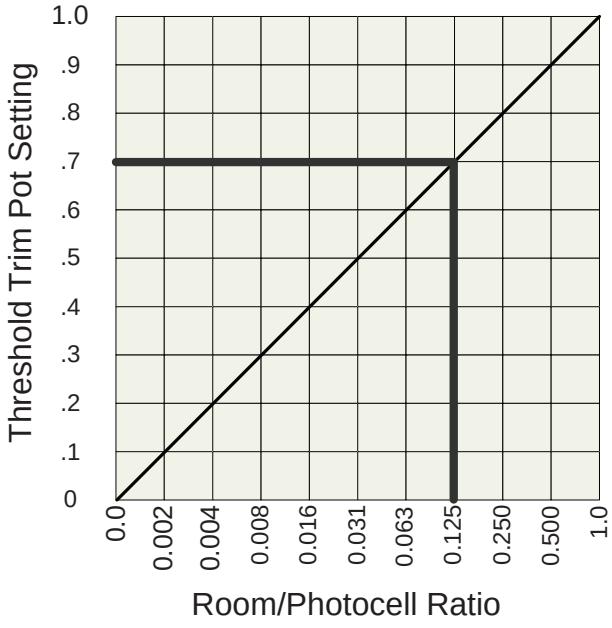

WEB VERSION

NOTES: BURN IN & AUTO CAL FEATURES

STEP 10

BURN IN FEATURE

Set by DIP Switch: Block 1 Number 7 = ON

The **Burn IN** feature of the miniZ Power Pack provides an automatic initializing cycle for new fluorescent lamps. The Burn In feature will maintain the fluorescent fixtures at full illumination levels for 100 hours. At the conclusion of the **Burn IN** cycle the miniZ Power Pack will enter normal operation.

When to use it

Some manufacturers of fluorescent lamps require the lamp to be run at the full illumination level for a 'burn in' period prior to any dimming activity. This feature provides an easy method to satisfy that requirement.

Start

To initialize this function, move the DIP switch labeled Burn In to the 'ON' position. *Observe:* The LED above the DIP switch will glow red and will remain in that state until the cycle is complete. The fluorescent fixtures will also be illuminated at their full level when turned on until all zones have been on for 100 hours.

Stop

The cycle can be stopped at any time by turning off the DIP switch.

Observe: The red LED above the DIP switch will turn off.

Restart

To restart this function, move the DIP switch labeled Burn In to the 'ON' position. *Observe:* The observations will be the same as the Start step.

Burn In and the Auto Cal features can occur at the same time.

AUTO CALIBRATION (CLOSED LOOP OPERATION ONLY)

Set by DIP Switch: Block 1 Number 5 = On

The **Auto Calibration** feature of the miniZ Power Pack provides an automatic daylight harvesting calibration. **During the 24 hour calibration period all fluorescent fixtures will remain at full illumination levels and cannot be turned off.** The miniZ Power Pack will monitor the Photocell readings to determine the lowest level during the calibration period. This reading typically occurs at night. At the conclusion of the **Auto Calibration** period the miniZ Power Pack will enter normal operation.

Note: Auto Calibration is only applicable to closed loop photocell operation. When the device is configured in open loop mode, auto calibration can be activated but the results of such will have no effect on the configuration or output of the miniZ.

Start

To initialize this function, move the DIP switch labeled Auto Cal to the 'ON' position.

Observe: The LED above the DIP switch will begin to flash on and off in a steady pattern until the calibration period is complete. The fluorescent fixtures will also be illuminated at their full level for the duration of the cycle.

Stop

The cycle can be stopped at any time by turning off the DIP switch.

Observe: The red LED above the DIP switch will turn off.

Restart

To restart this function, move the DIP switch labeled Auto Cal to the 'OFF" position and then back to the 'ON' position.

End of Cycle

Observe: The LED will be on steady at the end of the calibration period and the miniZ Power Pack will automatically enter normal operation.

WEB VERSION

LIMITED 5 YEAR WARRANTY AND EXCLUSIONS

Leviton warrants to the original consumer purchaser and not for the benefit of anyone else that this product at the time of its sale by Leviton is free of defects in materials and workmanship under normal and proper use for five years from the purchase date. Leviton's only obligation is to correct such defects by repair or replacement, at its option, if within such five year period the product is returned prepaid, with proof of purchase date, and a description of the problem to **Leviton Manufacturing Co., Inc., Att: Quality Assurance Department, 59-25 Little Neck Parkway, Little Neck, New York 11362-2591.** This warranty excludes and there is disclaimed liability for labor for removal of this product or reinstallation. This warranty is void if this product is installed improperly or in an improper environment, overloaded, misused, opened, abused, or altered in any manner, or is not used under normal operating conditions or not in accordance with any labels or instructions. There are no other or implied warranties of any kind, including merchantability and fitness for a particular purpose, but if any implied warranty is required by the application jurisdiction, the duration of any such implied warranty, including merchantability and fitness for a particular purpose, is limited to five years. Leviton is not liable for incidental, indirect, special, or consequential damages, including without limitation, damage to, or loss of use of, any equipment, lots sales or profits of delay or failure to perform this warranty obligation. The remedies provide herein are the exclusive remedies under this warranty, whether based on contract, tort or otherwise.

www.leviton.com
www.lms.leviton.com

WARNING: TO BE INSTALLED AND/OR USED IN ACCORDANCE WITH APPROPRIATE ELECTRICAL CODES AND REGULATIONS.

WARNING: IF YOU ARE UNSURE ABOUT ANY OF THESE INSTRUCTIONS, CONSULT A QUALIFIED ELECTRICIAN.

CAUTION: USE THIS DEVICE ONLY WITH COPPER OR COPPER CLAD WIRE, WITH ALUMINUM WIRE ONLY USE DEVICES MARKED CO/ALR OR CU/AL.

WARNING: TO AVOID FIRE, SHOCK OR DEATH; TURN OFF POWER AT CIRCUIT BREAKER OR FUSE AND TEST THAT POWER IS OFF BEFORE WIRING!

WEB VERSION

Dip Switch Bank S2	Switch No.	Function	Default Position in all models
	1	Emerg / Occ Disable	Emerg
	2	Force Off / PC Disable	Force Off
	3	Local / Net Enable	Local
	4	Man On / Auto On	Auto On
	5	Local / Auto Cal	Local
	6	PC Slow / PC Fast	PC Fast
	7	Off / Burn In	Off
	8	Open Loop / Closed Loop	Closed Loop

Dip Switch Bank S3	Switch No.	Function	Default Positions		
			BASIC models	DIMMING & NETWORK models	
	1	S1 – 1 Btn / 2 Btn On Only	2 Btn On	2 Btn On	Setup for operation with LV200 or LV240
	2	S1 – Mom / Main 10V	Mom	Mom 10V	
	3	S1 – Swt / Analog	Swt	Swt	
	4	S2 – 1 Btn / 2 Btn On Only	2 Btn On	2 Btn On	Setup for operation with LV200 or LV240
	5	S2 – Mom / Main 10V	Mom	Mom 10V	
	6	S2 – Swt / Analog	Swt	Swt	
	7	Enables Blink Warn & sets override time. 00 = Bw Off, 01 = ½ hr, 10 = 1hr, 11 = 2hr.		Off	Blink Warn Disabled, 1 HR Override
	8			Off	

Dip Switch Bank S4 Photocell Max FC (7)	Switch No.	Value	Position	
	1	1	On	Setup for 70 fc maximum output Photocell
	2	2	On	
	3	4	On	
	4	8	Off	
	5	16	Off	
	6	32	Off	
	7	64	Off	
	8	128	Off	

Jumper Plug JP5 – installed for HVAC (HVAC / Emerg)

WEB VERSION

TRIM POTS				
LABEL	BASIC MODEL		DIMMING & NETWORK MODELS	
	FUNCTION	DEFAULT SETTING	FUNCTION	DEFAULT SETTING
MAX.	N/A	N/A	Max output of 0 - 10V Outputs, Range 6 - 10V.	10 (100%)
MIN.	N/A	N/A	Minimum daylighting level, Range 0 - 4V.	0%
PC OFFSET	Sets the point that Relay 1 is opened. Range 0 – 10V.	5 (5V)	Sets target level 0 – 10V in Closed Loop mode, 0 – 100fc in Open Loop mode.	0 (20%)
THRESHOLD 1	N/A	N/A	Proportionally scales the daylighting level, Range 0 – 100%	10 (100%) (CLOCKWISE)
THRESHOLD 2	N/A	N/A		10 (100%) (CLOCKWISE)
THRESHOLD 3	N/A	N/A		10 (100%) (CLOCKWISE)

Leviton Lighting Management Systems
Division Headquarters
20497 SW Teton, Tualatin, Oregon
97062

Customer Service – (800) 736-6682
Facsimile – (503) 404-5600
Technical Support – (800) 959-6004

P/N PK-93383-10-00-0B

WEB VERSION