FIRE
SAFETY BOX

Standard Fire Safety is now offering fire safety boxes. Contact your sales representative for more information!

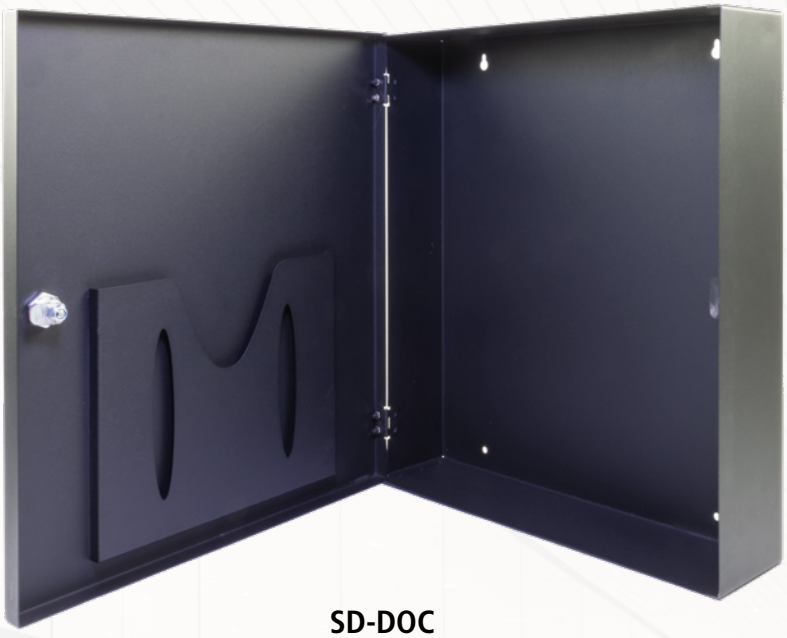

SD-DOC

DESCRIPTION

A Fire Safety Box provides a central location for storing a copy of the building's fire safety plan, a list of contacts, checklists, manuals, and other important documents for emergencies. In many cities across Canada, a Fire Safety Box is required by law and highly recommended by local fire departments. The fire safety plan can be locked using the lock supplied, which includes two keys.

FEATURES

- Indoor Installation
- Lock with 2 keys
- Optional mounting frame
- Document Holder
- Multilingual Labels
- Flush Mounting

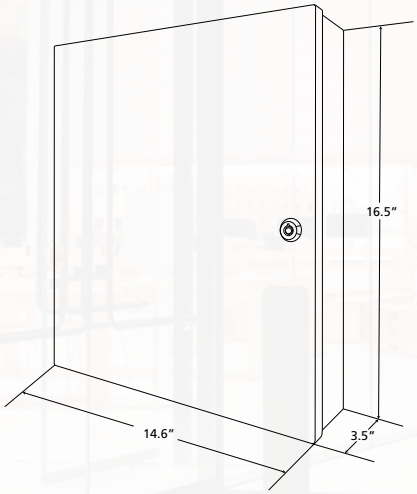

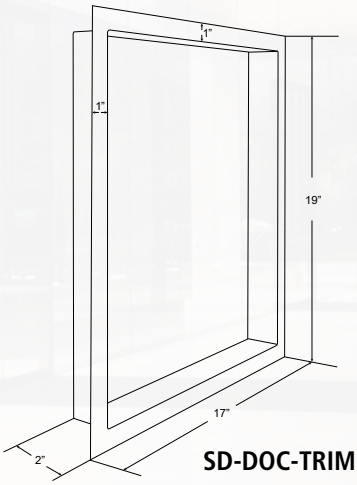

SD-DOC-TRIM

STICKER = 8.5" x 5.5"

	SIZE	WEIGHT
SD-DOC =	16.5" x 14.5" x 3.5"	8.8 lb

STANDARD
FIRE SAFETY

8866 Boul. du Quartier
Brossard, QC J4Y 0R2

+1 514 631 3131
info@standardfs.com