DoorBell Fon™

ACNC/TotalPlex®

DP28-N*x*F

Door Station (F-Series)

DESCRIPTION

DP28-NBF
Brass 2-Gang size

DP28-NBKF
Black 2-Gang size

DP28-NBZF
Bronze 2-Gang size

DP28-NSF
Aluminum 2-Gang size

Back by popular demand with additional colors, the **DP28F-Series** Door Station models include **DP28-NBF, DP28-NBKF, DP28-NBZF,** and **DP28-NSF**. These units provide standard door-to-phone communication when used with the **DP28-C*.** All F-Series Door Stations mount into any standard double-gang masonry box as a flush mount. An optional back box (DP38-BXFS) is available as a surface mount. This weather-proof back box provides quality protection and durability for your unit. Colors are available in 4 anodized finishes: brass, black, bronze, and aluminum. These Door Stations are also available in kits with the DP28-C as the **DP28-BF, DP28-BKF, DP28-BZF,** and **DP28-SF**.

*DP28-C not included

FEATURES

- Manufactured in aluminum with anodized Brass, Black, Bronze, and Aluminum finishes
- Mounts into any standard double-gang masonry box as a flush mount
- Optional surface mount back box (DP38-BXFS) mounts easily on almost any surfaces including fences and gates
- All back boxes are manufactured in steel with black powder-coating finish and provides superior protection from the elements
- No external power required: power drawn from connected Door Station Controller (DP28-C)
- LED button lights up when the Door Station is active

APPLICATIONS

- Communicate with people at a door, gate, or any other entrance way where Door Station is present
- Can be placed at:
  - Front/Rear Entrances
  - Remote Entryways
  - Marine Docks
  - Delivery Docks
  - Secured Facilities
  - Senior Housing
  - Disabled Housing
  - Apartment Complex
- Use in conjunction with the DP29-CI to activate external trigger devices (e.g. door chimes, cameras, lights…) with the Door Station
- Use in conjunction with the DP29-SW to open electronically locked doors or gates with the phone
- Use as extra Door Station to any Door Station Kit

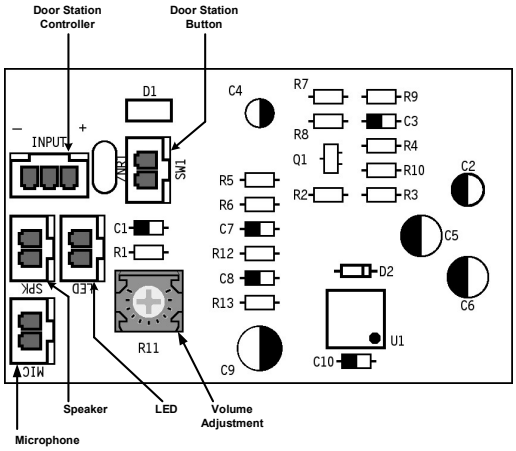

HTTP://WWW.HOMEPHONE.COM
EMAIL: INFO@HOMEPHONE.COM
1958 Ohio St. Lisle, IL 60532
TEL: (630) 241-2800 FAX: (630) 241-2820

SPECIFICATIONS

Power:
- **Circuit Board**: no external power required

Dimensions:
- Door Station: 4.5” x 4.5” x 1.625”

Shipping Weight:
- 2.0 lbs

Speaker:
- Frequency Response: 400~2.8kHz
- Impedance: 8Ω
- Peak Power: 0.25W
- Diameter: 2.25 inches

Microphone:
- Frequency Response: 200~6.8kHz

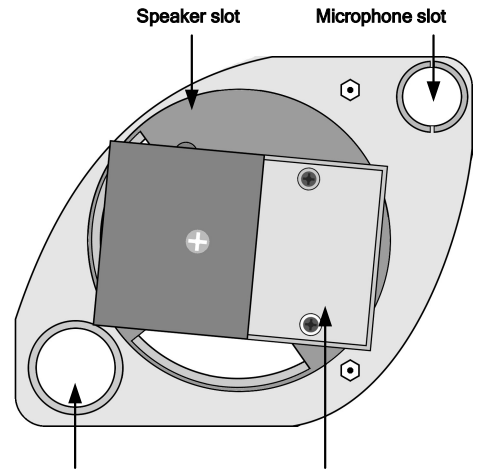

Door Station button slot: LED button lights up when the Door Station is active

Circuit board cover box: Cover box provides extra protection for the circuit board

MOUNTING
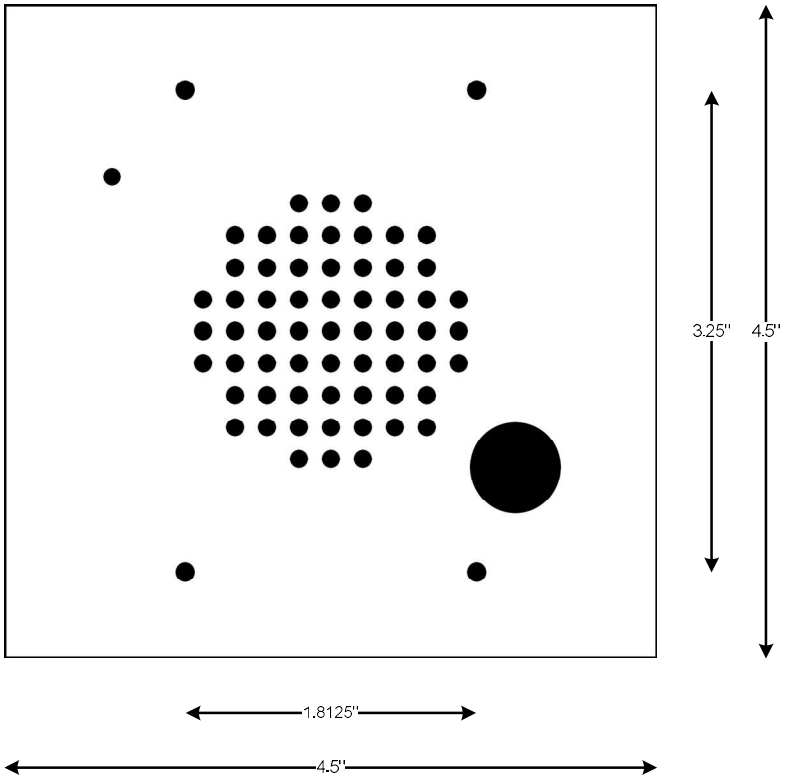
***screw-hole dimensions are standard 2-gang.**