# Flex Gen4 Compact Dome

## Situational Awareness

With resolution options up to 8MP/4K, inbuilt IR up to 20m and best image quality in varying lighting conditions provides better situational awareness for 24x7 operation

## Wider Field of View

Flex compact dome provides industry leading wide field of view thus helps covers more area with minimum cameras

## Edge Intelligence

Flex AI suite bundle at the edge provides real time alert during events and helps gather specific information during forensic search

## Open Standard Interface

Flex compact dome range is tested and qualified with latest ONVIF tools and hence can work with almost all major video management solutions qualified at same level

## Discreet Design

With its small size and discreet design, flex compact domes are suitable for multiple indoor and outdoor use cases

## Data Protection

Flex compact dome camera follows stringent JCI cyber program to protect captured data from its misuse. It fully complies to NDAA and TAA norms

# Specifications

| Operational | 2MP | 5MP | 8MP |
|---|---|---|---|
| **Camera** | | | |
| Image Sensor | Sony 1/2.8" Progressive Scan CMOS imager | Sony 1/2.8" Progressive Scan CMOS imager | Sony 1/1.8" Progressive Scan CMOS imager |
| Lens | 2.8mm, F2.0, Fixed focus | | 4.5mm, F1.65, Fixed Focus |
| | F1.6(W) – F3.1(T) | F1.31(W) – F2.37(T) | F1.3(W) – F2.15(T) |
| Field of View (FoV) | H: 114.1°<br>V: 61.3° | H: 104.7°<br>V: 76.5° | H: 109.9°<br>V: 56.7° |
| Day/Night | True Day/Night | | |
| Minimum Illumination | Color: 0.1 lux,<br>B/W: 0.01 lux<br>0 lux with IR | | |
| Camera Angle Adjustment | Pan 350°, Tilt 67°, Rotation 355° | | |
| Electronic Shutter Control | Automatic, Manual (1/4 to 1/32000 sec) | | |
| IR Illumination | 850 nm, Smart IR, up to 20m (65.62 ft) | | |
| Memory | 2048 MB RAM, 4096 MB Flash | | |
| **Video** | | | |
| Bandwidth Management | IntelliZip® Smart Codec | | |
| Video Compression | H.264/H.265/MJPEG<br>H.264 IntelliZip® / H.265 IntelliZip® | | |
| Bitrate Control | CBR/VBR/CVBR (configurable) | | |
| Max Resolution (HxV) & Aspect Ratio | 16:9: 1920 x 1080 (2MP) to 480x272 | 4:3: 2560 x 1920 (5MP) to 480x272<br>Default resolution 16:9: 2560 x 1440 (4MP) | 16:9: 3840 x 2160 (8MP) to 480x272 |
| Max Frame Rate (60 Hz/50 Hz) | 2MP: 60/50 fps | 2MP: 60/50 fps<br>5MP: 30/25 fps | 2MP: 60/50 fps<br>8MP: 15/12.5 fps |
| Video Streams | Triple Streaming with a maximum of 5 concurrent shared streams | | |
| Dynamic Range | True multi shutter WDR up to 141 dB<br>Off, TWDR, TWDR 3x, SmartWDR | | |
| SmartDefog | Supported | | |
| Picture Settings | Auto Exposure: Multiple Profiles (incl Auto, Gaming, LPR), Multiple ROI (incl AI ROI: Object, Person), Gain Control (Auto, Max, Manual), Flickerless, White Balance (Auto Normal, Auto Wide, Manual), text overlay | | |
| Privacy Zones | 10 user definable rectangular zones | | |
| **Analytics** | | | |
| AI Object Classification | **Classes:** Person, Bicycle, Bus, Car, Motorbike, Train, Truck, Any Class<br>**Sub-Classes (attributes):** Person Clothing Color (Upper, Lower), Vehicle Color<br>**Rules:** Object Detected, Perimeter, Linger, Dwell, Abandoned/Removed, Enter, Exit, Crowd, Queue, Direction | | |
| AI Tamper Detection | Blackout, Whiteout, Scene Change (FoV tamper) | | |
| AI Blur Detection | Supported | | |
| AI Metadata | Supported | | |
| Motion Detection Zones | 3 zones supported | | |
| **Network** | | | |
| Network | IEEE 802.3, 10/100Base-T Ethernet, RJ45, auto sensing | | |
| Cyber security | ISASecure ISA/IEC 62443-4-1 certified secure development<br>Secure boot<br>Signed and encrypted firmware | | |
| Authentication and Security | TLS, HTTPS (HTTP over TLS), WS-Security, Certificate Management, Multi-level password protection, IP address filtering, HTTPS encryption, Enhanced Security (One-Click Security Hardening), User Access Log, Validate Complex Credentials, Disabling Unused Protocols, IEEE 802.1x (PEAP, EAP-TLS, EAPoL) | | |
| Protocols | TCP/IP, IPv4, IPv6, TCP, UDP, HTTP, FTP, DHCP, WS-Discovery, DNS, DDNS, RTP, RTCP, RTSP, TLS, Unicast, Multicast, NTP, ICMP, IGMP, SMTP, WS-Security, IEEE 802.1x, PEAP, EAP-TLS, EAPoL, SSH, HTTPS, SOAP, WS-Addressing, CIFS, UPNP, LLDP, SIP, ARP, EAP-LEAP, QoS | | |
| Network management | SNMPv1/v2c/v3(MIB-2) | | |
| Simultaneous users | 10 users | | |
| **System Integrations** | | | |
| Application Programming Interface | ONVIF Profile S, G, T, M conformant<br>Illustra iAPI via Connected partner program | | |
| Event Triggers | Motion Detection, Tamper & Blur Detection, AI Object classification, Network Loss, Periodic Event, Temperature | | |
| Event Actions | Record to SD card, Snapshot, SMTP e-mail file transfer, FTP file transfer, CIFS, Auxiliary output, Audio clip playback | | |

| | | | |
|---|---|---|---|
| **Peripherals** | | | |
| Onboard Storage | microSDXC slot, Class 10 or better, up to 1TB supported (Card not included)<br>Pre event / Post event 1- 10 sec<br>Encrypted storage and streaming<br>TrickleStor offline recording and backfilling | | |
| Wireless configuration | Micro USB via optional USB Wi-Fi Dongle IA-KIT-WD-UUA | | |
| **Electrical** | | | |
| Power | PoE 802.3af (802.3at Type 1) Class 3 | | |
| | **PoE**<br>Typ. 0.1A / Max 0.15A<br>Typ. 4.7W / Max 6.9W | **PoE**<br>Typ. 0.11A / Max 0.16A<br>Typ. 5.2W / Max 7.3W | **PoE**<br>Typ. 0.12A / Max 0.18A<br>Typ. 5.4W / Max 8.3W |
| **Physical** | | | |
| Operating conditions | -50°C (-58°F) to +60° C (122°F) (IR off at +50° C/140° F)<br>Start-up temperature: -40°C (-40°F)<br>Humidity up to 95% RH, Non-Condensing | | |
| Casing | IP66, IP67, NEMA 4x and IK10<br>Housing: Aluminum alloy<br>Dome: Polycarbonate<br>Color: Signal White Pantone RAL 9003 | | |
| Dimensions | Ø112 x 72 mm (Ø4.3 x 2.0 in) | | |
| Weight | Net 0.43 kg (1.06 lbs.), Gross 0.816 kg (1.83 lbs.) | | |
| **Regulatory** | | | |
| EMC | CE/UKCA: EN 55032 Class A, EN 61000-3-2, EN 61000-3-3, EN 50130-4, EN 61000-4-2, EN 61000-4-3, EN 61000-4-4, EN 61000-4-5, EN 61000-4-6, EN 61000-4-11, BS EN 55032, BS EN 50130-4, BS EN 61000-3-2, BS EN 61000-3-3<br>ICES-003/NMB-003 Class A<br>CFR 4 7 FCC Part 15 Subpart B Class A<br>RCM AS/NZS CISPR 32 Class A<br>KS C 9832 Class A, KS C 9835 | | |
| Safety | UL 62368-1, CAN/CSA C22.2 No. 62368-1<br>KC 62368-1<br>BIS IS13252 Part 1<br>IEC 62471 | | |
| Environmental | IEC 60529 IP66, IEC 60529 IP67<br>IEC 62262 IK10<br>BS EN IEC 63000<br>ROHS, REACH, WEEE<br>NEMA 250 Type 4x | | |
| **General** | | | |
| Web Browsers | Microsoft Edge, Firefox, Safari, Chrome | | |
| Language | Arabic, Chinese (Simplified), Chinese (Traditional), Czech, Danish, English (default), French, German, Hungarian, Italian, Japanese, Korean, Netherlands, Polish, Portuguese, Russian, Spanish, Swedish, Turkish | | |
| NDAA Compliant | Yes | | |
| Warranty | 5 Years | | |

# Camera Dimensions

Unit: mm(in)

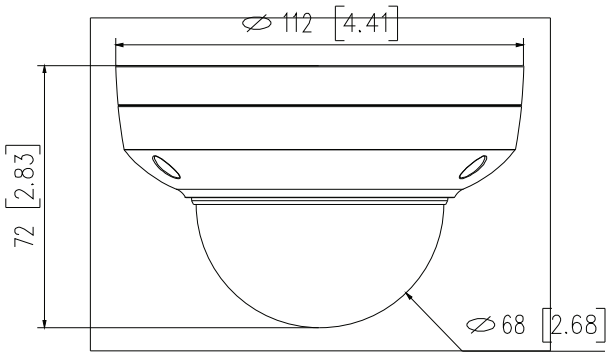


# Ordering Information

| Model Number | Sales Description |
|---|---|
| IFS02-C10-OIB4 | Illustra Flex Gen4 2MP Compact Dome, 2.8mm, AI, TDN w/IR, TWDR, IP66/67, IK10, Clear Bubble |
| IFS05-C10-OIB4 | Illustra Flex Gen4 5MP Compact Dome, 2.8mm, AI, TDN w/IR, TWDR, IP66/67, IK10, Clear Bubble |
| IFS08-C23-OIB4 | Illustra Flex Gen4 8MP/4K Compact Dome, 4.5mm, AI, TDN w/IR, TWDR, IP66/67, IK10, Clear Bubble |

# Optional Accessories

| Model Number | Description |
|---|---|
| IA-KIT-WD-UUA | Wi-Fi Dongle Kit |
| ADCi6MPCAPIW | Pendant Cap, White |
| IBJB-F-3CWB-0 | Junction Box, White |
| ADLOMARM | Gooseneck Mounting Arm, White |
| ADCDMCRNRO | Corner Mount Adapter, White |
| ADCDMPOLE | Pole Mount Adapter, White |

# Accessory Chart

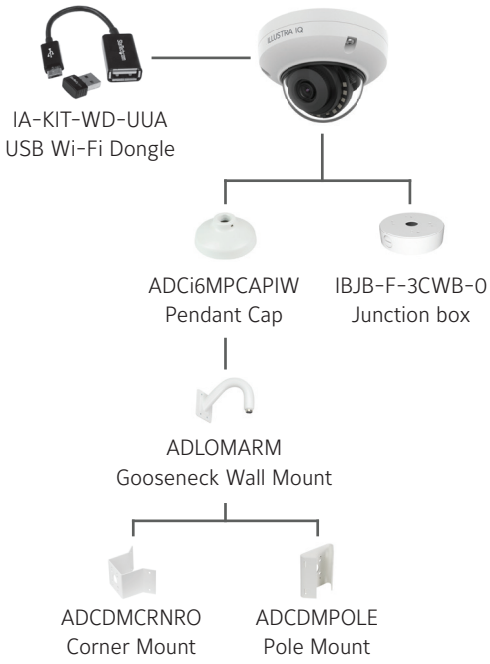


© 2024 Johnson Controls. All rights reserved. Product offerings and specifications are subject to change without notice.
Actual products may vary from photos. Not all products include all features. Availability varies by region; contact your sales representative.