TOA SQUARE CEILING MOUNT SPEAKER PC-580S AM

■DESCRIPTION

The PC-580S Square Ceiling Mount Speaker is of all heavy-duty metallic construction with an 8-inch speaker and 5W transformer to be used in 25V/70V audio distribution systems. It delivers highly intelligible voice announcements and clear music sounds in General Paging and Background Music Distribution applications. The optional back boxes are available for flush or surface mount installations on the wall. The input impedance can be easily changed by transformer tap position and its dual push-in teminal helps quick daisy-chain wiring.

■SPECIFICATIONS

Rated Input	5W (70.7 V line and 25 V line)
Rated Impedance	70.7 V line: 1 kΩ (5 W), 2 kΩ (2.5 W), 5 kΩ (1 W), 8.3 kΩ (0.6 W), 16.6 kΩ (0.3 W) 25 V line: 125 Ω (5 W), 250 Ω (2.5 W), 625 Ω (1 W), 1 kΩ (0.6 W), 2 kΩ (0.3 W)
Sensitivity	97 dB (1 W, 1 m)
Frequency Response	50 Hz – 16.5 kHz
Speaker Component	200 mmm (8") Dual cone-type
Magnet Size	ø80 X ø32 X 15 mm (3.15" X 1.26" X 0.59")
Magnet Weight	315 g (11.11 oz)
Flux Density	11,300 gauss
Operating Temperature	-10 ℃ to +50 ℃ (14 ℉ to 122 ℉)
Dimensions for Fixing Hole	Mounting hole: ø228.6±3 mm (9"±0.12")
Speaker Mounting Method	Screw in type
Applicable Cable	Solid wire: ø0.8 – ø1.6 (AWG 20 – 12)
Connection	Push wire connection (Bridging terminal-2 branch type)
Finish	Panel: Steel plate, white, paint
Dimensions	318 X 318 X 87 (D) mm (12.52" X 12.52" X 3.43")
Weight	1.90 kg (4.19 lbs)
Accessory	Screw M5 X 38 ···4, Paper pattern ···1
Option	Flush mount back box: Q-BB-580S Surface mount back box: Q-BB-580W

■APPEARANCE

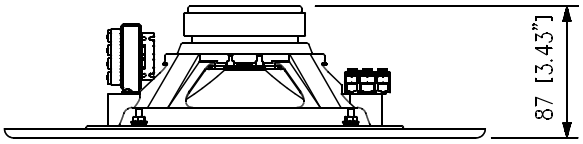

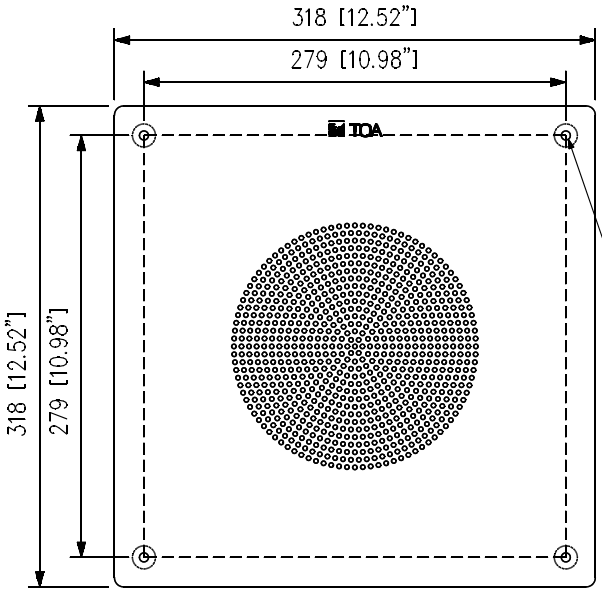

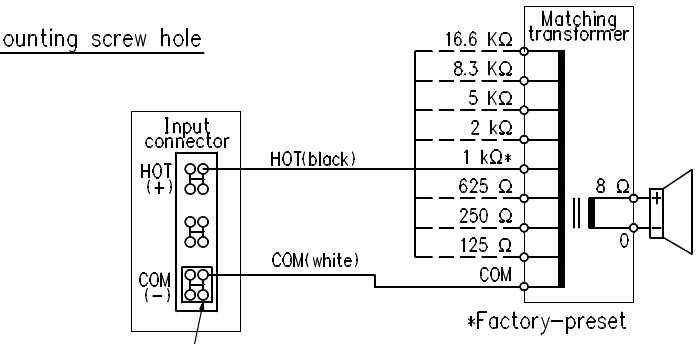

Wiring Diagram

Note: Use transformer terminals when changing input impedance.

UNIT: mm SCALE: 1/5