FIRE·LITE ALARMS
by Honeywell

Addressable Fire Alarm Control Panel

ES-1000X
ES-1000XC
ES-1000XI

Manual

Document LS10133-000FL-E Rev: A
6/21/2023 ECN:00022081

Fire Alarm & Emergency Communication System Limitations

While a life safety system may lower insurance rates, it is not a substitute for life and property insurance!

An automatic fire alarm system—typically made up of smoke detectors, heat detectors, manual pull stations, audible warning devices, and a fire alarm control panel (FACP) with remote notification capability—can provide early warning of a developing fire. Such a system, however, does not assure protection against property damage or loss of life resulting from a fire.

An emergency communication system—typically made up of an automatic fire alarm system (as described above) and a life safety communication system that may include an autonomous control unit (ACU), local operating console (LOC), voice communication, and other various interoperable communication methods—can broadcast a mass notification message. Such a system, however, does not assure protection against property damage or loss of life resulting from a fire or life safety event.

The Manufacturer recommends that smoke and/or heat detectors be located throughout a protected premises following the recommendations of the current edition of the National Fire Protection Association Standard 72 (NFPA 72), manufacturer's recommendations, State and local codes, and the recommendations contained in the Guide for Proper Use of System Smoke Detectors, which is made available at no charge to all installing dealers. This document can be found at http://www.systemsensor.com/appguides/. A study by the Federal Emergency Management Agency (an agency of the United States government) indicated that smoke detectors may not go off in as many as 35% of all fires. While fire alarm systems are designed to provide early warning against fire, they do not guarantee warning or protection against fire. A fire alarm system may not provide timely or adequate warning, or simply may not function, for a variety of reasons:

Smoke detectors may not sense fire where smoke cannot reach the detectors such as in chimneys, in or behind walls, on roofs, or on the other side of closed doors. Smoke detectors also may not sense a fire on another level or floor of a building. A second-floor detector, for example, may not sense a first-floor or basement fire.

Particles of combustion or "smoke" from a developing fire may not reach the sensing chambers of smoke detectors because:

- Barriers such as closed or partially closed doors, walls, chimneys, even wet or humid areas may inhibit particle or smoke flow.
- Smoke particles may become "cold," stratify, and not reach the ceiling or upper walls where detectors are located.
- Smoke particles may be blown away from detectors by air outlets, such as air conditioning vents.
- Smoke particles may be drawn into air returns before reaching the detector.

The amount of "smoke" present may be insufficient to alarm smoke detectors. Smoke detectors are designed to alarm at various levels of smoke density. If such density levels are not created by a developing fire at the location of detectors, the detectors will not go into alarm.

Smoke detectors, even when working properly, have sensing limitations. Detectors that have photoelectronic sensing chambers tend to detect smoldering fires better than flaming fires, which have little visible smoke. Detectors that have ionizing-type sensing chambers tend to detect fast-flaming fires better than smoldering fires. Because fires develop in different ways and are often unpredictable in their growth, neither type of detector is necessarily best and a given type of detector may not provide adequate warning of a fire.

Smoke detectors cannot be expected to provide adequate warning of fires caused by arson, children playing with matches (especially in bedrooms), smoking in bed, and violent explosions (caused by escaping gas, improper storage of flammable materials, etc.).

Heat detectors do not sense particles of combustion and alarm only when heat on their sensors increases at a predetermined rate or reaches a predetermined level. Rate-of-rise heat detectors may be subject to reduced sensitivity over time. For this reason, the rate-of-rise feature of each detector should be tested at least once per year by a qualified fire protection specialist. Heat detectors are designed to protect property, not life.

IMPORTANT! Smoke detectors must be installed in the same room as the control panel and in rooms used by the system for the connection of alarm transmission wiring, communications, signaling, and/or power. If detectors are not so located, a developing fire may damage the alarm system, compromising its ability to report a fire.

Audible warning devices such as bells, horns, strobes, speakers and displays may not alert people if these devices are located on the other side of closed or partly open doors or are located on another floor of a building. Any warning device may fail to alert people with a disability or those who have recently consumed drugs, alcohol, or medication. Please note that:

- An emergency communication system may take priority over a fire alarm system in the event of a life safety emergency.
- Voice messaging systems must be designed to meet intelligibility requirements as defined by NFPA, local codes, and Authorities Having Jurisdiction (AHJ).
- Language and instructional requirements must be clearly disseminated on any local displays.
- Strobes can, under certain circumstances, cause seizures in people with conditions such as epilepsy.
- Studies have shown that certain people, even when they hear a fire alarm signal, do not respond to or comprehend the meaning of the signal. Audible devices, such as horns and bells, can have different tonal patterns and frequencies. It is the property owner's responsibility to conduct fire drills and other training exercises to make people aware of fire alarm signals and instruct them on the proper reaction to alarm signals.
- In rare instances, the sounding of a warning device can cause temporary or permanent hearing loss.

A life safety system will not operate without any electrical power. If AC power fails, the system will operate from standby batteries only for a specified time and only if the batteries have been properly maintained and replaced regularly.

Equipment used in the system may not be technically compatible with the control panel. It is essential to use only equipment listed for service with your control panel.

Alarm Signaling Communications:

- **IP connections** rely on available bandwidth, which could be limited if the network is shared by multiple users or if ISP policies impose restrictions on the amount of data transmitted. Service packages must be carefully chosen to ensure that alarm signals will always have available bandwidth. Outages by the ISP for maintenance and upgrades may also inhibit alarm signals. For added protection, a backup cellular connection is recommended.
- **Cellular connections** rely on a strong signal. Signal strength can be adversely affected by the network coverage of the cellular carrier, objects and structural barriers at the installation location. Utilize a cellular carrier that has reliable network coverage where the alarm system is installed. For added protection, utilize an external antenna to boost the signal.
- **Telephone lines** needed to transmit alarm signals from a premise to a central monitoring station may be out of service or temporarily disabled. For added protection against telephone line failure, backup alarm signaling connections are recommended.

The most common cause of life safety system malfunction is inadequate maintenance. To keep the entire life safety system in excellent working order, ongoing maintenance is required per the manufacturer's recommendations, and UL and NFPA standards. At a minimum, the requirements of NFPA 72 shall be followed. Environments with large amounts of dust, dirt, or high air velocity require more frequent maintenance. A maintenance agreement should be arranged through the local manufacturer's representative. Maintenance should be scheduled as required by National and/or local fire codes and should be performed by authorized professional life safety system installers only. Adequate written records of all inspections should be kept.

Limit-F-2020

Installation Precautions

Adherence to the following will aid in problem-free installation with long-term reliability:

WARNING - Several different sources of power can be connected to the fire alarm control panel. Disconnect all sources of power before servicing. Control unit and associated equipment may be damaged by removing and/or inserting cards, modules, or interconnecting cables while the unit is energized. Do not attempt to install, service, or operate this unit until manuals are read and understood.

CAUTION - System Re-acceptance Test after Software Changes: To ensure proper system operation, this product must be tested in accordance with NFPA 72 after any programming operation or change in site-specific software. Re-acceptance testing is required after any change, addition or deletion of system components, or after any modification, repair or adjustment to system hardware or wiring. All components, circuits, system operations, or software functions known to be affected by a change must be 100% tested. In addition, to ensure that other operations are not inadvertently affected, at least 10% of initiating devices that are not directly affected by the change, up to a maximum of 50 devices, must also be tested and proper system operation verified.

This system meets NFPA requirements for operation at 0-49º C/32-120º F and at a relative humidity 93% ± 2% RH (non-condensing) at 32°C ± 2°C (90°F ± 3°F). However, the useful life of the system's standby batteries and the electronic components may be adversely affected by extreme temperature ranges and humidity. Therefore, it is recommended that this system and its peripherals be installed in an environment with a normal room temperature of 15-27º C/60-80º F.

Verify that wire sizes are adequate for all initiating and indicating device loops. Most devices cannot tolerate more than a 10% I.R. drop from the specified device voltage.

Like all solid state electronic devices, this system may operate erratically or can be damaged when subjected to lightning induced transients. Although no system is completely immune from lightning transients and interference, proper grounding will reduce susceptibility. Overhead or outside aerial wiring is not recommended, due to an increased susceptibility to nearby lightning strikes. Consult with the Technical Services Department if any problems are anticipated or encountered.

Disconnect AC power and batteries prior to removing or inserting circuit boards. Failure to do so can damage circuits.

Remove all electronic assemblies prior to any drilling, filing, reaming, or punching of the enclosure. When possible, make all cable entries from the sides or rear. Before making modifications, verify that they will not interfere with battery, transformer, or printed circuit board location.

Do not tighten screw terminals more than 9 in-lbs. Over-tightening may damage threads, resulting in reduced terminal contact pressure and difficulty with screw terminal removal.

This system contains static-sensitive components. Always ground yourself with a proper wrist strap before handling any circuits so that static charges are removed from the body. Use static suppressive packaging to protect electronic assemblies removed from the unit.

Units with a touchscreen display should be cleaned with a dry, clean, lint free/microfiber cloth. If additional cleaning is required, apply a small amount of Isopropyl alcohol to the cloth and wipe clean. Do not use detergents, solvents, or water for cleaning. Do not spray liquid directly onto the display.

Follow the instructions in the installation, operating, and programming manuals. These instructions must be followed to avoid damage to the control panel and associated equipment. FACP operation and reliability depend upon proper installation.

Precau-D2-11-2017

FCC Warning

WARNING: This equipment generates, uses, and can radiate radio frequency energy and if not installed and used in accordance with the instruction manual may cause interference to radio communications. It has been tested and found to comply with the limits for class A computing devices pursuant to Subpart B of Part 15 of FCC Rules, which is designed to provide reasonable protection against such interference when devices are operated in a commercial environment. Operation of this equipment in a residential area is likely to cause interference, in which case the user will be required to correct the interference at his or her own expense.

Canadian Requirements

This digital apparatus does not exceed the Class A limits for radiation noise emissions from digital apparatus set out in the Radio Interference Regulations of the Canadian Department of Communications.

Le present appareil numerique n'emet pas de bruits radioelectriques depassant les limites applicables aux appareils numeriques de la classe A prescrites dans le Reglement sur le brouillage radioelectrique edicte par le ministere des Communications du Canada.

LiteSpeed™ and **Lite-Connect™** are trademarks; and **Fire-Lite® Alarms, Honeywell®,** and **SWIFT®** are registered trademarks of Honeywell International Inc.**Microsoft®** and **Windows®** are registered trademarks of the Microsoft Corporation. **Chrome™** and **Google™** are trademarks of Google Inc. **Firefox®** is a registered trademark of The Mozilla Foundation.

©2023 by Honeywell International Inc. All rights reserved. Unauthorized use of this document is strictly prohibited.

Software Downloads

In order to supply the latest features and functionality in fire alarm and life safety technology to our customers, we make frequent upgrades to the embedded software in our products. To ensure that you are installing and programming the latest features, we strongly recommend that you download the most current version of software for each product prior to commissioning any system. Contact Technical Support with any questions about software and the appropriate version for a specific application.

Documentation Feedback

Your feedback helps us keep our documentation up-to-date and accurate. If you have any comments or suggestions about our online Help or printed manuals, you can email us.

Please include the following information:

- Product name and version number (if applicable)
- Printed manual or online Help
- Topic Title (for online Help)
- Page number (for printed manual)
- Brief description of content you think should be improved or corrected
- Your suggestion for how to correct/improve documentation

Send email messages to:

FireSystems.TechPubs@honeywell.com

Please note this email address is for documentation feedback only. If you have any technical issues, please contact Technical Services.

This symbol (shown left) on the product(s) and / or accompanying documents means that used electrical and electronic products should not be mixed with general household waste. For proper treatment, recovery and recycling, contact your local authorities or dealer and ask for the correct method of disposal.

Electrical and electronic equipment contains materials, parts and substances, which can be dangerous to the environment and harmful to human health if the waste of electrical and electronic equipment (WEEE) is not disposed of correctly.

Table of Contents

Section 1: Product Description 12
1.1: Features and Options 12
1.2: Specifications 13
1.3: Controls and Indicators 15
1.4: Components 15
1.4.1: Intelligent Addressable Detectors 16
1.4.2: Intelligent Addressable Modules 16
1.4.3: Addressable Device Accessories 16
End-of-Line Resistor Assembly 16
Power Supervision Relay 16
EOL-C(R/W) Mounting Plate 17
1.5: Optional Modules 17
1.6: Accessories 17
1.6.1: FS-Tools Programming Utility 17
1.6.2: Battery Box 17
BB-26 17
BB-55F 17
1.6.3: Battery Charger 17
CHG-75 Battery Charger 17
CHG-120F Battery Charger 17
1.6.4: W-GATE(A) Wireless Gateway 18
1.6.5: ANN-BUS Annunciators/Modules 18
Guidelines 18
ANN-80 and ANN-100 Remote Fire Annunciators 18
ANN-S/PG Serial/Parallel Interface Module 18
ANN-I/O LED Driver Module 18
ANN-LED Annunciator Module 18
ANN-RLY Annunciator Module 18
1.7: Getting Started 19
1.8: Telephone Requirements and Warnings 19
1.8.1: Telephone Circuitry 19
1.8.2: Telephone Company Rights and Warnings 19
1.8.3: For Canadian Applications 20

Section 2: Installation 21
2.1: Mounting the Backbox 21
2.2: Power 24
2.2.1: AC Power and Earth Ground Connection 24
2.2.2: Battery Power 24
2.2.3: Special Application DC Power Output Connection 25
2.3: Relays 25
2.4: Notification Appliance Circuits 25
2.4.1: Class B NAC Wiring 26
2.4.2: Class A NAC Wiring 26
2.5: Remote Synchronization Output 26
2.6: UL Power-limited Wiring Requirements 27
2.7: IPOTS-COM Communicator 28
Wiring 28
Dip Switches 28
Remote Connection Feature 28
2.8: Optional Module Installation 29
2.8.1: SLC-3LS Loop Expander Module Installation 29
2.8.2: 4XTMF Transmitter Module Installation 29
2.8.3: ANN-BUS Annunciators/Modules 30
ANN-BUS Wiring 30
ANN-BUS Device Addressing 32
ANN-80 Remote Fire Annunciator 32
ANN-100 Remote Fire Annunciator 35
ANN-S/PG Serial/Parallel Interface Module 35
ANN-I/O LED Driver Module 37
ANN-LED Annunciator Module 39

ANN-RLY Annunciator Module 40
2.8.4: Printer 42
Printer Configuration 42
2.8.5: W-GATE(A) Wireless Gateway 42

Section 3: Programming 43

3.1: User Programming 44
3.2: Programming Screens Description 44
3.3: Initial Power-up 44
3.4: Users and Passwords 44
3.4.1: Administrator Role 45
Password Change-Administrator 45
Password Change- User 46
Assign Role 47
3.4.2: User Role 48
3.5: Master Programming Level 48
3.5.1: Autoprogram 49
3.5.2: Point Program 50
Loop Select 50
Detector Programming 50
Module Programming 56
3.5.3: Zone Setup 65
Zone Types 65
Zone Message 65
Special Purpose Zone 65
Zones Installed 66
Zones Enabled 66
Zones Disabled 66
Zones Available 67
3.5.4: Loop Setup 67
Loop 67
Device Addressing 67
3.5.5: System Setup 67
Function Keys 68
Banner 69
Time/Date 69
Timers 71
NACs (Notification Appliance Circuits) 73
Relays 76
Canadian Option 76
Waterflow Silenceable 77
MNS Override 77
Auxiliary Power 77
Trouble Reminder 77
Language 77
4XTMF Supervision 77
Remote Sync Enable 77
Charger Enable 78
Battery Size 78
3.5.6: History 78
View Events 78
Erase History 78
3.5.7: Communicator 79
Communicator Installed 79
POTS Settings 79
IP Settings 80
Primary and Secondary Communication Paths 81
Trouble Report Limit (Dialer Runaway Prevention) 83
Report Style 83
Event Codes 83
3.5.8: Annunciators 86
ANN-BUS Setup 87

ANN-BUS Options 94
3.5.9: Password Change 95
Invalid Password 96
Incorrect Password/Timeout 96
3.5.10: Clear Program 96
3.5.11: Program Check 96
3.6: Maintenance Programming Level 97
3.6.1: Disable Point 98
3.6.2: History 98
3.6.3: Program Check 99
3.6.4: Walktest 99
3.6.5: System 100
3.6.6: Zone Setup 101

Section 4: Operating Instructions 102

4.1: Panel Control Buttons 102
4.1.1: Acknowledge 102
4.1.2: Alarm Silence 102
4.1.3: Drill/Hold 2 Sec 102
4.1.4: Reset 102
4.1.5: Function Keys F1-F4 102
4.2: LED Indicators 102
4.3: Normal Operation 103
4.4: Trouble Operation 103
4.5: Alarm Operation 104
4.6: CO Alarm Operation 105
4.7: Supervisory Operation 105
4.8: Process Monitor Operation 106
4.9: Hazard/Tornado Condition Operation 106
4.10: Medical Alert Condition Operation 106
4.11: NAC Operation 107
4.12: Programmed Zone Operation 107
4.13: Disable/Enable Operation 107
4.14: Waterflow Circuits Operation 107
4.15: Detector Functions 107
4.16: Time Functions: Real-Time Clock 107
4.17: Synchronized NAC Operation 107
4.18: Coded Operation 108
4.19: Pre-signal 108
4.20: Positive Alarm Sequence 108
4.21: Special System Timers 108
4.21.1: Silence Inhibit Timer 108
4.21.2: Autosilence Timer 109
4.21.3: Trouble Reminder 109
4.21.4: Waterflow Retard Timer 109
4.21.5: Alarm Verification (None or One Minute) 109
4.21.6: Control Module Delay Timer 109
4.22: Walktest 109
4.23: Read Status 110
4.23.1: System Point 110
4.23.2: Zones 111
4.23.3: Trouble Reminder 111
4.23.4: Timers 112
4.23.5: NACs 112
4.23.6: Relays 112
4.23.7: Program Check 112
4.23.8: History 113
4.23.9: Annunciators 113
4.23.10: Communicator 113
4.23.11: Print 114
Chamber Value 115
Drift Compensation 115

Maintenance Alert....115
4.23.12: Time/Date....116
4.23.13: Battery Charger....116
4.23.14: 4XTM Supervision....116
4.23.15: Remote Sync....116

Section 5: Central Station Communications - POTS Transmission....117
5.1: Transmittal Priorities....117

Section 6: FS-Tools Upload/Download....119
6.1: FS-Tools Up/Download....119
6.2: Transferring a Program....120
6.2.1: Security Features....120
Time-out at Control Panel....120
Error Checking....120
Central Station Data Protection....120

Section 7: USB Upload/Download....121
7.1: USB Upload/Download....121

Section 8: Firmware Upgrade....123
8.1: Firmware Upgrade....123

Section 9: Power Supply Calculations....125
9.1: Overview....125
9.2: Calculating the AC Branch Circuit....125
9.3: Calculating the System Current Load....125
9.3.1: Overview....125
9.3.2: How to Calculate System Current Load....125
9.4: Calculating the Battery Size....127
9.4.1: NFPA Battery Requirements....127
9.4.2: Selecting and Locating Batteries....127

Appendix A: Software Zones....128
A.1: Correlations....128

Appendix B: Default Programming....136

Appendix C: NFPA Standard-Specific Requirements....137
C.1: MBT-1 Municipal Box Trip - Silenceable....140

Appendix D: Wire Requirements....141
D.1: NAC Wiring....142

Appendix E: HVAC Control....143
E.1: Control Module Operation....143
E.1.1: HVAC SHUTDOWN....143
E.2: Monitor Module Operation....144
E.2.1: HVAC RESTART....144
E.2.2: HVAC OVRRIDE....144

Appendix F: Ademco Contact ID Format Event Code Descriptions....145
F.1: Transmission Format Between DACT and Receiver....145
F.2: Ademco Contact ID Typical Printout....145

Appendix G: Central Station Points....150

Appendix H: NFPA Requirements....156

Appendix I: Open/Short/Ground Trip Values....157

Appendix J: Canadian Applications....158

Index....160

Slide-in Labels....165

ES-1000X, ES-1000XC, and ES-1000XI Operating Instructions....167

It is imperative that the installer understand the requirements of the Authority Having Jurisdiction (AHJ) and be familiar with the standards set forth by the following regulatory agencies:

- Underwriters Laboratories/Underwriters Laboratories Canada
- National Fire Protection Association

Before proceeding, the installer should be familiar with the following documents.

NFPA Standards

NFPA 72 National Fire Alarm Code
NFPA 70 National Electrical Code
NFPA 720 Carbon Monoxide Detection and Warning Equipment

Underwriters Laboratories Documents:
UL 38 Manually Actuated Signaling Boxes
UL 217 Smoke Detectors, Single and Multiple Station
UL 228 Door Closers–Holders for Fire Protective Signaling Systems
UL 268 Smoke Detectors for Fire Protective Signaling Systems
UL 268A Smoke Detectors for Duct Applications
UL 346 Waterflow Indicators for Fire Protective Signaling Systems
UL 464 Audible Signaling Appliances
UL 521 Heat Detectors for Fire Protective Signaling Systems
UL 864 Standard for Control Units for Fire Protective Signaling Systems
UL 1481 Power Supplies for Fire Protective Signaling Systems
UL 1638 Visual Signaling Appliances
UL 1971 Signaling Devices for Hearing Impaired
UL 2017 General-Purpose Signaling Devices and Systems
UL 2075 Standard for Gas and Vapor Detector and Sensors
UL 2572 Communication and Control Units for Mass Notification Systems

CAN/ULC - S524-01 Standard for Installation of Fire Alarm Systems
CAN/ULC - S559-04 Equipment for Fire Signal Receiving Centers and Systems
CAN/ULC - S561-03 Installation and Services for Fire Signal Receiving Centers and Systems
CAN/ULC - S527-99 Standard for Control Units for Fire Alarm Systems
This Class (A) digital apparatus complies with Canadian ICES-003.
Cet appareil numérique de la classe (A) est conforme à la norme NMB-003 du Canada.

Other:
Canadian Electrical Code, Part I
EIA-232E Serial Interface Standard
EIA-485 Serial Interface Standard
NEC Article 250 Grounding
NEC Article 300 Wiring Methods
NEC Article 760 Fire Protective Signaling Systems
Applicable Local and State Building Codes
Requirements of the Local Authority Having Jurisdiction (LAHJ)

Fire-Lite Documents:

Fire-Lite Device Compatibility	Document #15384
SLC Wiring Manual	Document #51309
Wireless Gateway Manual	Document #LS10036-000FL-E
CHG-120F Battery Charger	Document #50888
CHG-75 Battery Charger	Document #51315
IPOTS-COM POTS/IP Communicator	Document #LS10184-000GE-E
SLC-3LS Loop Expander Module	Document #LS10195-000FL-E
FL-PS Power Supply	Document #LS10227-001FL-E
ANN-80 Product Installation Document	Document #52749
ANN-100 Product Installation Document	Document #LS10205-000FL-E
ANN-(R)LED Product Installation Doc.	Document #50055
ANN-I/O Product Installation Document	Document #151416
ANN-RLY Product Installation Document	Document #50055
ANN-S/PG Product Installation Document	Document #151417

This product has been certified to comply with the requirements in the Standard for Control Units and Accessories for Fire Alarm Systems, UL 864, 10th Edition. Operation of this product with products not tested for UL 864, 10th Edition has not been evaluated. Such operation requires the approval of the local Authority Having Jurisdiction (AHJ).

For product compliance, refer to the UL/ULC listing cards located on the UL online certification directory at https://iq.ulprospector.com/en/.

Basic System Connections

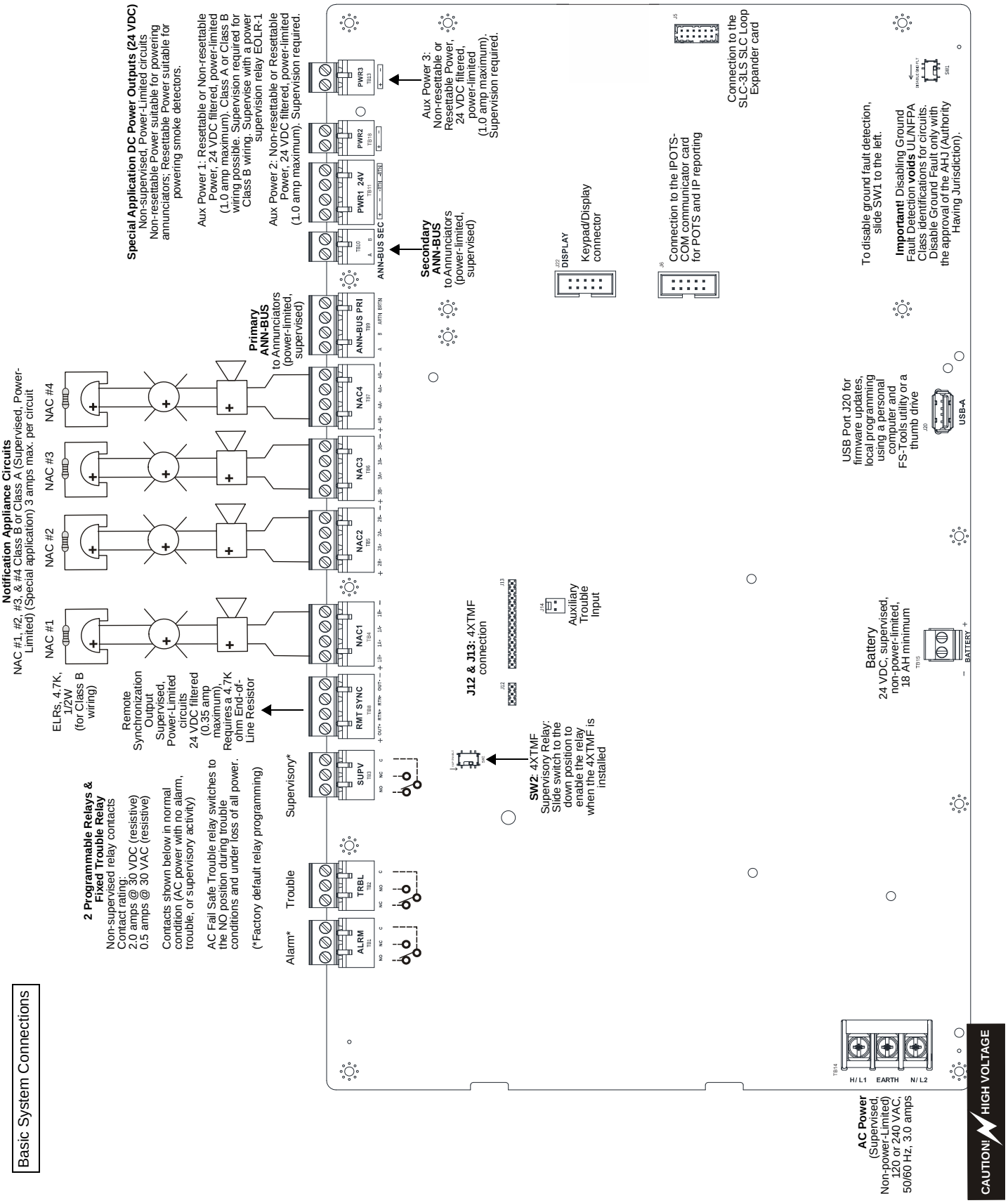

Peripheral Devices and Their Documents:

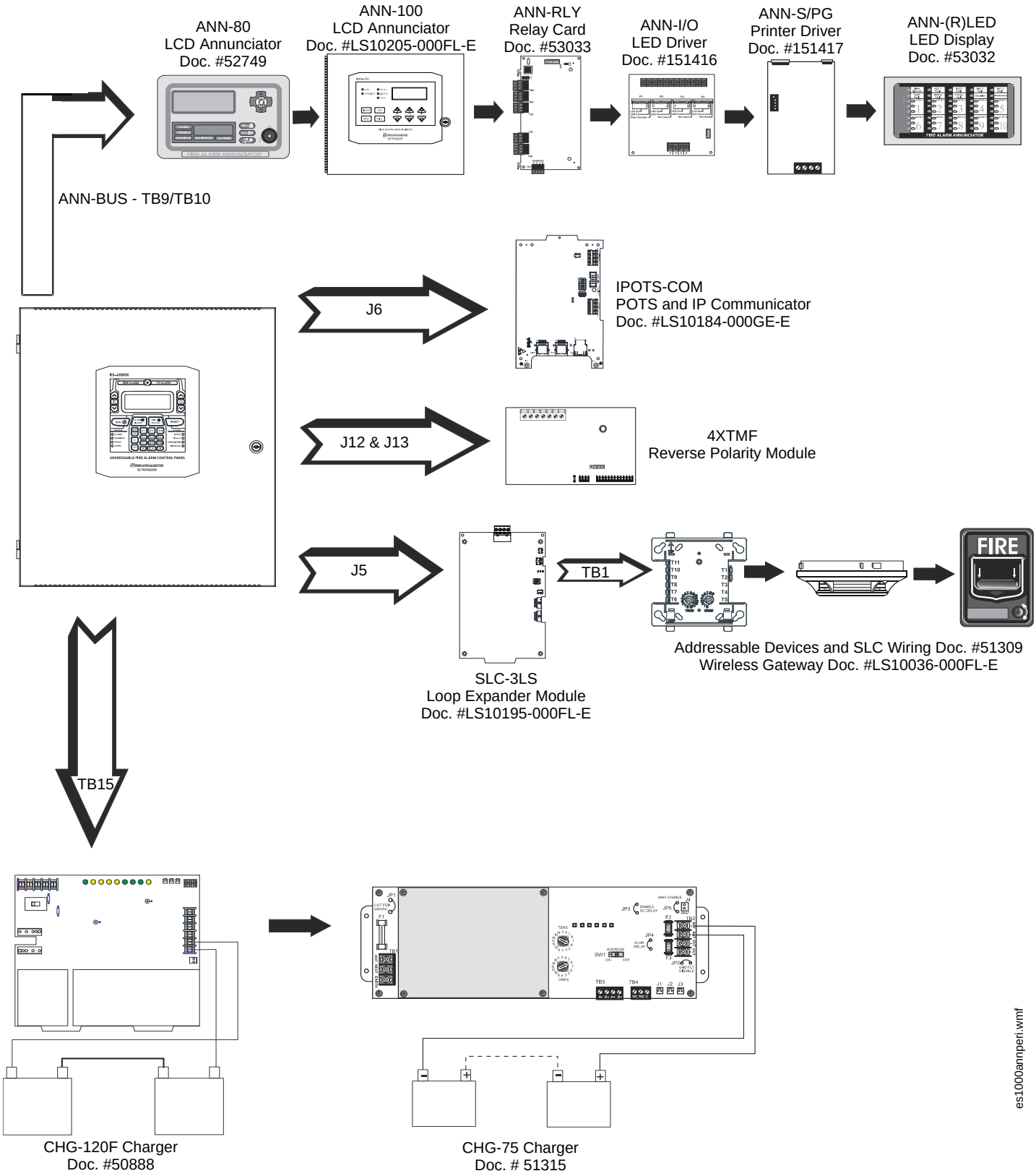

Section 1: Product Description

The Fire-Lite ES-1000X is an addressable FACP (Fire Alarm Control Panel) with a pre-installed communicator card that is compact, cost effective, intelligent, and has an extensive list of powerful features.The combination of Fire-Lite's newer series devices and legacy 300 Series devices, along with the ES-1000X FACP, offer the latest in fire protection technology. The power supply and all electronics are housed in a metal cabinet, providing a complete fire control system for most applications. Optional modules, which plug into the main circuit board, are available for special functions. Available accessories include multi-technology central station communicators, LED, graphic, and LCD annunciators, reverse polarity/city box transmitter, local and remote upload/download software, and remote power expansion.

The ES-1000XC is a ULC-listed Canadian version of the FACP which offers the same features as the ES-1000X, but is supplied standard with a dress panel. Refer to "Canadian Option" on page 76 for a full description. Note that all references to Class A, Class B, and Class X for SLC/Communication circuits in this manual also applies to DCLA, DCLB, and DCLC for Data Communication Link for ULC-S527-19.

The ES-1000XI is a version of the FACP which offers the same features as the ES-1000X, but does not come with the pre-installed communicator.

NOTE: Unless otherwise specified, the term ES-1000X is used to refer to all versions of the panel.

Inventory

When ES-1000X shipment is received, check that all parts have been included in shipment. The ES-1000X shipment consists of one of each of the following:

- ✓ main circuit board with loop card and communicator (The ES-1000XI does not include the pre-installed communicator.)
- ✓ backbox with door, dress panel, and keypad/display
- ✓ plastic bag containing screws, cables, ELRs, terminal blocks, etc.

1.1 Features and Options

- Pre-installed IPOTS-COM Ethernet IP and POTS (Plain Old Telephone Service) Central Station Communicator
- Pre-installed SLC loop card
- Optional SLC-3LS Loop Expander Card to add an SLC Loop (two optional cards max. for a total max. of three loops on the FACP)
- LiteSpeed™ polling protocol for faster SLC response time
- SLC operates up to 10,000 ft. (3,000 m) in LiteSpeed mode with twisted, unshielded wire (refer to "Wire Requirements" on page 141)
- Single addressable SLC loop which meets NFPA Class B, Class A, and Class X requirements
- 318 addressable device capacity (159 detectors and 159 control/relay/monitor modules) per loop
- 256 software zones
- Four (4) Class A or four (4) Class B NAC (Notification Appliance Circuits) circuits - special application power
- 8.0 amps total 24 VDC output circuit current in alarm condition
- Four programmable function keys for ease of maintenance
- Two programmable relay outputs and one fixed trouble relay
- Synchronization output for remote power supply applications (special application)
- Built-in Programmer
- 80-character LCD display (backlit)
- Real-time clock/calendar with daylight savings time control
- History file with 1,000 event capacity
- Addressable sounder base compatibility
- Multi-criteria detector (smoke, heat, CO) with programmable response
- Advanced fire technology features:
  - ✓ Automatic drift compensation
  - ✓ Maintenance alert
  - ✓ Detector sensitivity test capability (NFPA 72 compliant)
  - ✓ Automatic device type-code verification
  - ✓ Point trouble identification
- Waterflow selection per module point
- Alarm verification selection per detector point
- Walktest, silent or audible
- PAS (Positive Alarm Sequence) and Pre-signal per point (NFPA 72 compliant)
- Silence inhibit timer option per NAC
- Autosilence timer option per NAC
- Continuous, March Time, Temporal or California code for main circuit board NACs with two-stage capability
- Selectable strobe synchronization per NAC
- Remote Acknowledge, Alarm Silence, Reset and Drill via addressable modules or ANN-80/ANN-100 Remote annunciator
- Auto-program (learn mode) reduces installation time. Reports two devices set to the same address
- Password and key-protected nonvolatile memory
- User programmable password
- Fully programmable from local keypad

- Optional FS-Tools programming utility for local or remote Upload/Download of programming and data (available for download from www.firelite.com)
- Compatible with Fire-Lite's devices in LiteSpeed and CLIP mode (refer to SLC Wiring Manual for a list of compatible addressable devices)
- Compatible with legacy Fire-Lite 300 Series devices in CLIP mode only (refer to the SLC Wiring Manual for a list of compatible addressable devices)
- Optional 4XTMF module (conventional reverse polarity/city box transmitter)
- ANN-BUS for connection to following optional modules:
  - ✓ ANN-80 Remote Annunciator (for UL applications only)
  - ✓ ANN-100 Remote Annunciator (for FM and Canadian applications only)
  - ✓ ANN-I/O LED Driver
  - ✓ ANN-S/PG Printer Module
  - ✓ ANN-RLY Form-C Relay Module
  - ✓ ANN-LED Annunciator Module annunciates alarm, trouble and supervisory (required for Canada and emergency signaling)
  - ✓ ANN-RLED Annunciator Module annunciates alarms only

1.2 Specifications

Refer to Illustration on page 10 for terminal locations and connections.

AC Power - TB14

Operates in either 120 or 240 VAC, 50/60 Hz, 3.0 amps, auto-sensing. No switch or jumper required.
Wire size: minimum 14 AWG (2.00 mm^2) with 600 V insulation

Battery (Sealed Lead Acid Only) - TB15

Maximum Charging Circuit: Normal Flat Charge – 27.6 VDC @ 1.5 amps
Minimum System Battery Size: 18 Amp Hour
Maximum Battery Charger Capacity: 55 Amp Hour (FACP cabinet holds maximum of two 26 Amp Hour batteries.)
Note: Refer to the programming section to disable the FACP battery charger when using an external battery charger.

Notification Appliance Circuits - TB4, TB5, TB6, & TB7

Four (4) Class B NAC circuits or four (4) Class A circuits
Special Application, filtered power
Power-limited circuitry
NAC wiring requirements refer to "NAC Wiring" on page 142
Nominal operating voltage: 24 VDC
Current-limit: fuseless, electronic, power-limited circuitry
Maximum signaling current per circuit: 3.0 amps special application, 300 mA regulated (see Figure 1.1 on page 14)
(Regulated power is for industrial horn, strobes, and chimes not included in the Device Compatibility Document. Special application power is for NAC devices included in Device Compatibility Document, aux power, and door holders.)
End-of-Line Resistor: 4.7 kΩ, ½ watt (P/N 71252 UL listed) required for each circuit; system capable of 1.9 kΩ - 22 kΩ ELR range.
Refer to the *Device Compatibility Document* for listed compatible devices

Two Programmable Relays and One Fixed Trouble Relay - TB1, TB2, & TB3

Contact rating: 2.0 amps @ 30 VDC (resistive), 0.5 amps @ 30 VAC (resistive)
Form-C relays
Refer to Figure 2.6 on page 25 for information on power-limited relay circuit wiring

Non-resettable or Resettable Special Application Power (24 VDC Nominal) - TB11 (programmable)

Factory-set as non-resettable, suitable for powering annunciators
Programmable Class A or Class B wiring
Maximum ripple voltage: 237.9 mVp-p
Total DC current available is up to 1.0 amp (see Figure 1.1 on page 14)
Power-limited circuit
Note: Refer to the programming section to configure power as resettable/non-resettable and for Class A or Class B wiring.

Resettable or Non-resettable Special Application Power (24 VDC Nominal) - TB18 and TB13

Factory-set as resettable, suitable for powering four-wire smoke detectors
Class B wiring only
Maximum ripple voltage: 237.9 mVp-p
Total DC current available is up to 1.0 amp (see Figure 1.1)
Power-limited circuit
Refer to the *Device Compatibility Document* for listed compatible devices
Note: Refer to the programming section to configure power as resettable/non-resettable.

Remote Sync Output - TB8

Remote power supply synchronization output
24 VDC nominal special application power
Maximum current is 350 mA
End-of-Line Resistor: 4.7KΩ
Output linked to NAC 1 control
Supervised and power-limited circuit
Programmable Class A or Class B wiring

Primary ANN-BUS - TB9

Class A or Class B wiring
ANN-BUS annunciator connector, Terminal 1 (+/A) and Terminal 2 (-/B)
Class A wiring uses Terminal 3 (+/A Return) and Terminal 4 (-/B Return)
Annunciators require non-resettable power

Secondary ANN-BUS - TB10

Class B wiring only
ANN-BUS annunciator connector, Terminal 1 (+/A) and Terminal 2 (-/B)
Annunciators require non-resettable power

The following figure illustrates the maximum current that is possible for each major panel output circuit and the total current available from the FACP.

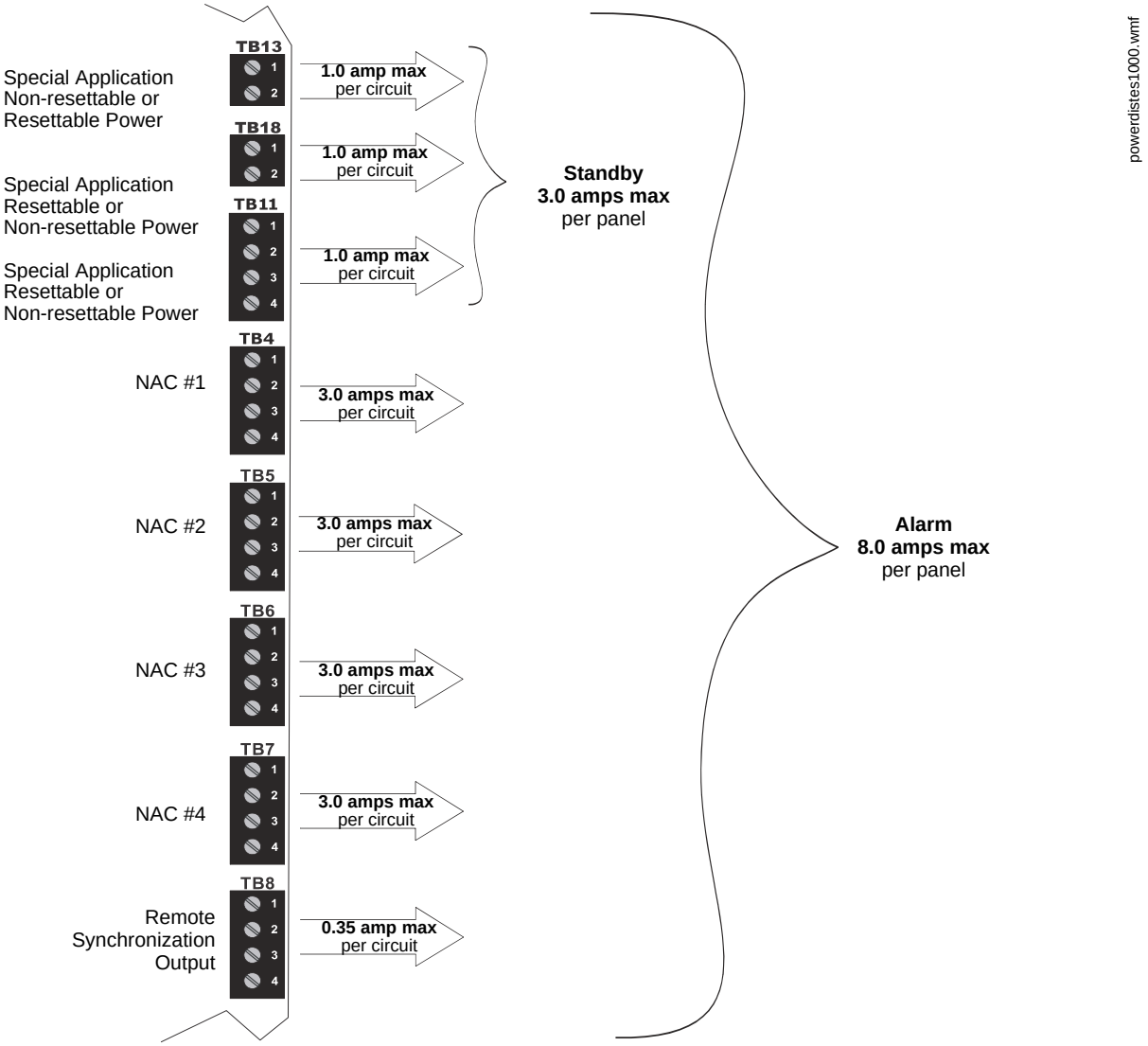

Refer to the battery calculations section for additional information.

Figure 1.1 Current Availability

1.3 Controls and Indicators

LCD Display

The FACP uses an 80-character
(4 lines X 20 characters) high viewing angle LCD display. The display includes a long life LED backlight that remains illuminated. If AC power is lost and the system is not in alarm, the LED backlight will turn off to conserve batteries.

Key Panel

Mounted on the main circuit board, the key panel includes a window for the LCD display and LED indicators as listed below. The key panel, which is visible with the cabinet door closed, has 30 keys, including a 16 key alpha-numeric pad similar to a telephone keypad.

LED Indicators

LED indicators are provided to annunciate the following conditions:

- Fire Alarm (red)
- CO Alarm (yellow)
- AC Power (green)
- Supervisory (yellow)
- Trouble (yellow)
- Ground fault (yellow)
- Battery fault (yellow)
- Disabled (yellow)
- Maintenance (yellow)
- Communication (yellow)
- Alarm Silenced (yellow)
- F1-F4 Function keys (yellow)

Function keys:

- Acknowledge
- Alarm Silence
- Drill
- Reset (lamp test)
- four (4) programmable function keys

Service/program keys:

- Keys labeled 1 to 9
- * key
- # key
- 0 key
- First Event and scroll keys
- Last Event and scroll keys
- Clear key
- Escape key
- Two cursor keys (left and right)
- Menu/Enter key

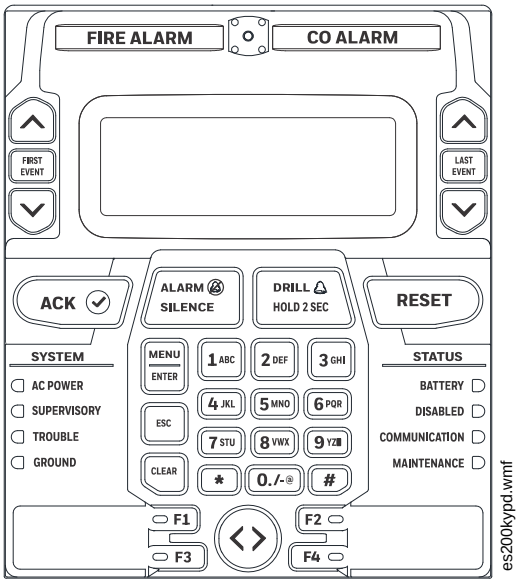

Figure 1.2 Membrane/Display Panel

Local Piezo Sounder

A piezo sounder provides separate and distinct pulse rates for alarm, trouble and supervisory conditions.

1.4 Components

Main Circuit Board

The main circuit board contains the system's CPU, power supply, other primary components and wiring interface connectors. The 4XTMF option module plugs in and is mounted to the main circuit board.

SLC Loop Card

The ES-1000X ships with one loop card mounted to the main circuit board. A maximum of 318 devices can be connected to the SLC loop in Class A, Class B, or Class X configuration.

IPOTS-COM

The IP/POTS Communicator card, standard on the ES-1000X and ES-1000XC, transmits system status (alarms, troubles, AC loss, etc.) to a Central Station via the public switched telephone network. It also allows remote programming or interrogation of the control panel using the FS-Tools Upload/Download utility and a hard-wired ethernet IP connection. Any personal computer with Windows® 7 or greater, 32 or 64 bit, and FS-Tools software may serve as a Service Terminal. This allows download of the entire program or upload of the entire program, history file, walktest data, current status and system voltages. Refer to Section 6 on page 119 for more information.

The IPOTS-COM digital communicator provides the following functions:

- Line Seizure: takes control of the phone lines disconnecting any premises phones
- Off/On Hook: performs on and off-hook status to the phone lines
- Listen for dial tone: 440 Hz tone typical in most networks
- Dialing the Central Station(s) number: default is Touch-Tone®, programmable to rotary
- For tone burst or touchtone type formats: discern proper *Ack* and *Kissoff* tone(s). The frequency and time duration of the tone(s) varies with the transmission format. The control panel will adjust accordingly.
- Communicate in the following formats:
  - ✓ Ademco Contact ID
  - ✓ SIA DCS 8
  - ✓ SIA DCS 20

Cabinet

The ES-1000X backbox provides space for two batteries (up to 26 Amp Hour). Ample knockouts are provided for system wiring. A dress panel comes standard with every cabinet.

Dress Panel

A dress panel comes standard with the ES-1000X. The dress panel restricts access to the system wiring while allowing access to the keypad.

Batteries

Batteries larger than 55 Amp Hour require an external charger such as the CHG-75 or CHG-120F and a UL listed battery box such as the BB-26 or BB-55F. Batteries must be ordered separately.

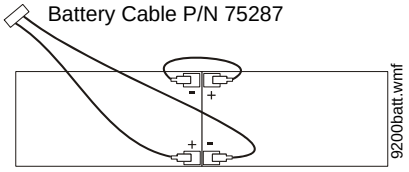

1.4.1 Intelligent Addressable Detectors

Intelligent, addressable detectors provide information to the control panel on an SLC Signaling Line Circuit (refer to the SLC Wiring Manual for detailed information on device installation, wiring and operation). This allows the control panel to continually process the information to determine the status (alarm, trouble, maintenance or normal) of each detector. Each detector responds to an SLC address that is set in the detector head using built-in rotary decimal switches. The maximum address cannot exceed address 159. Note that a blinking LED on an intelligent detector indicates communication between the detector and the control panel.

These devices (350 Series or newer) can operate in CLIP mode (Classic Loop Interface Protocol) or LiteSpeed mode to provide a quicker response. They are also compatible with older 300 Series devices. If a mix of old and new series devices are installed on the same loop, the FACP must be programmed to operate in CLIP mode. Refer to the SLC Wiring Manual for a list of compatible addressable detectors.

1.4.2 Intelligent Addressable Modules

Control Modules and Monitor Modules provide an interface between the control panel and conventional notification and initiating devices. Each module can be set to respond to an address with built-in rotary switches. The maximum address cannot exceed address 159. Note that a blinking LED on an addressable module indicates communication between the module and the control panel.

These devices (i.e., MMF-300, MDF-300, MMF-301, MMF-302, CMF-300, CRF-300) can operate in CLIP mode (Classic Loop Interface Protocol) or LiteSpeed mode to provide a quicker response. They are also compatible with older 300 series devices. If a mix of old and new series devices are installed on the same loop, the FACP must be programmed to operate in CLIP mode. Refer to the *SLC Wiring Manual* for a list of compatible addressable modules. Refer to the *Device Compatibility Document* for a list of approved conventional notification and initiating devices.

1.4.3 Addressable Device Accessories

End-of-Line Resistor Assembly

The End-of-Line resistors are included with each module. Refer to the specific module documentation for specific information.

Power Supervision Relay

The UL listed End-of-Line power supervision relay is used to supervise the power to 4-wire smoke detectors and notification appliances.

EOL-C(R/W) Mounting Plate

The EOL-CR (red) and EOL-CW (white) are single End-of-Line resistor plates which are required for use in Canada. An ELR, which is supplied with each module and fire alarm control panel, is mounted to the EOL-C(R/W) plate. Resistors mounted to the plate can be used for the supervision of a monitor and control module circuit.

1.5 Optional Modules

The ES-1000X main circuit board includes option module connectors for the following modules:

SLC-3LS Loop Expander Module

The SLC-3LS is an optional card that provides the ES-1000X with an additional SLC loop. An additional 318 devices can be wired to each SLC-3LS card. Two SLC3-LS cards may be installed on the FACP, offering a total of three SLC loops in the system.

4XTMF Transmitter Module

The 4XTMF provides a supervised output for local energy municipal box transmitter, alarm and trouble reverse polarity. It includes a disable switch and disable trouble LED. A jumper on the module is used to select an option which allows the reverse polarity circuit to open with a system trouble condition if no alarm condition exists. The module plugs into connectors J12 and J13 which are located near the right edge the main circuit board. When the 4XTMF module is installed, enable supervision of the module through user programming.

IPOTS-COM

The IP/POTS Communicator card, optional to the ES-1000XI, transmits system status (alarms, troubles, AC loss, etc.) to a Central Station via the public switched telephone network. It also allows remote programming or interrogation of the control panel using the FS-Tools Upload/Download utility and a hard-wired ethernet IP connection. Refer to the description in “Components” on page 15 for more information.

1.6 Accessories

1.6.1 FS-Tools Programming Utility

The FS-Tools Programming Utility can be used to locally or remotely program the FACP from most Windows® compatible computers (PC), running Windows 7 or newer, 32 or 64 bit. The FACP program files can also be created and stored on the PC for future download to the control panel. FS-Tools can be downloaded from www.firelite.com. A standard USB cable with male-A to male-A connectors, which must be purchased separately, is required for local connection of the PC to the USB port J20 on the FACP main circuit board. Remote programming requires that the PC have a GSM or ethernet connection.

FS-Tools also provides the ability to create panel program files on a USB flash drive. The drive can then be plugged into USB port J20 on the FACP main circuit board.

Important: Remote modification of FACP programming requires that the panel be enabled for remote download (refer to “FS-Tools Upload/Download” on page 119). Remote interrogation of panel programming, history logs, detector status, etc., is possible without enabling the remote download option.

1.6.2 Battery Box

BB-26

The BB-26 battery box may be used to house up to two 26 AH batteries and the CHG-75 Battery Charger.

BB-55F

The BB-55F battery box may be used to house two 26 AH batteries, two 60 AH batteries or one 100 AH battery. When the CHG-120F is mounted in the BB-55F, two 26 AH or one 60 AH battery may also be housed in the battery box.

1.6.3 Battery Charger

CHG-75 Battery Charger

The CHG-75 is capable of charging up to 75 AH lead-acid batteries with the ES-1000X FACP. The FACP battery charger must be disabled, through user programming, when using the CHG-75. The charger and up to 26 AH batteries can be housed in the BB-26 battery box. Larger batteries and the charger can be housed in the BB-55F battery box which can be mounted up to 20 feet away from the control panel in conduit. Refer to the *CHG-75 Manual* for additional information.

CHG-120F Battery Charger

The CHG-120F is capable of charging up to 120 AH lead-acid batteries with the ES-1000X FACP. The FACP battery charger must be disabled, through user programming, when using the CHG-120F. The batteries and charger can be housed in the BB-55F battery box which can be mounted up to 20 feet away from the control panel in conduit. Note that when using the BB-55F for housing the charger and batteries greater than 26AH, multiple BB-55Fs are required. Refer to the *CHG-120F Manual* for additional information.

1.6.4 W-GATE(A) Wireless Gateway

The W-GATE(A) Wireless Gateway acts as a bridge between a group of wireless fire devices and a LiteSpeed SLC loop on the ES-1000X. It is powered by the SLC loop or by a regulated, external 24VDC UL-listed power supply evaluated for life safety. Available wireless devices include a photo detector, a photo/heat detector, a fixed-temperature heat detector, a rate-of-rise heat detector, a monitor module, and a relay module. A maximum of 196 wireless devices can be used in the system. For details about wireless devices, system setup, and operation, see the *SWIFT® Smart Wireless Integrated Fire Technology Instruction Manual* #LS10036-000FL-E.

NOTE: Wireless configurations do not comply with the CAN/ULC-S527:2019 4th Edition Control Units for Fire Alarm Systems requirement for audible signal devices and visible signal devices, within the same manually initiated fire alarm zone, to activate within 5 seconds.

1.6.5 ANN-BUS Annunciators/Modules

WARNING: RISK OF ELECTRICAL SHOCK AND EQUIPMENT DAMAGE

DISCONNECT ALL SOURCES OF POWER (AC AND DC) BEFORE INSTALLING OR REMOVING ANY MODULES OR WIRING.

Guidelines

- A variety of optional annunciation devices can be connected to an ANN-BUS communication circuit. ANN Series devices can be connected to the primary communication circuit (EIA-485) terminals on TB9. A secondary communication circuit for these devices is available at TB8. Each ANN-BUS communication circuit supports up to eight (8) annunciators. Compatible devices include the following:
  - ANN-80 LCD Annunciator (for UL applications only)
  - ANN-100 LCD Annunciator (for FM and Canadian applications only)
  - ANN-S/PG Serial/Parallel Printer Interface Module
  - ANN-I/O LED Driver Module
  - ANN-LED Annunciator Module (alarm, trouble, supervisory LEDs)
  - ANN-RLED Annunciator Module (red alarm LEDs only)
  - ANN-RLY Relay Module (can be mounted in the supplied FACP chassis)
- When operating two ANN-BUS circuits, only one ANN-S/PG Printer module can be used in the system.
- The panel is capable of operating a primary ANN-BUS (TB9) and a secondary ANN-BUS (TB10) simultaneously.

ANN-80 and ANN-100 Remote Fire Annunciators

The ANN-80 and ANN-100 Annunciators are 80 character, backlit, LCD remote fire annunciator. They mimic the display on the control panel and will annunciate device type, point alarm, trouble or supervisory conditions, zone assignment, plus any custom alpha labels programmed into the FACP. The annunciators also provide system status LEDs to display AC Power, Alarm, Trouble, Supervisory and Alarm Silenced conditions. Additionally, the annunciators are capable of remotely performing critical system functions such as Acknowledge, Silence, Reset and Drill. Communication between the ANN-80/ANN-100 and the FACP is accomplished over a two wire RS-485 serial interface employing the ANN-BUS communication format. The devices are powered, via two additional wires, from either the host FACP or remote UL-listed, filtered, regulated power supply.

The function buttons, keyswitch and piezo sounder may be individually enabled and disabled through the FACP software. Refer to “ANN-80/100 Options” on page 95 for a description of this feature and programming information.

Note that if the keyswitch is enabled and remains in the unlocked position for more than two minutes without any buttons being pressed on the annunciator, a trouble indication will be annunciated.

For Canadian applications, the ANN-80C and ANN-100C annunciators must be installed in a secure room.

ANN-S/PG Serial/Parallel Interface Module

The ANN-S/PG Serial/Parallel Interface module allows the connection of a remote serial or parallel printer to the FACP for a real-time log of system events, detector status reports and event history. The module is provided with a plastic enclosure for surface mounting.

ANN-I/O LED Driver Module

The ANN-I/O is an LED driver module that can be used in a wide variety of applications, including as an interface with most customized graphic annunciators. The ANN-I/O can drive up to 40 LEDs. The module is provided with a plastic wall mount.

The ANN-I/O must be installed adjacent to the main FACP operator interface to meet UL 2017 standards

ANN-LED Annunciator Module

The ANN-LED and ANN-RLED annunciator modules provide LED annunciation of general system faults and input zones/points when used with a compatible FACP. The ANN-LED module provides alarm (red), trouble (yellow) and supervisory (yellow) indication for up to ten input zones or addressable points. The ANN-RLED provides alarm (red) indication for up to 30 input zones or addressable points. Multiple ANN-(R)LED modules may be used for full system coverage.

The ANN-(R)LED must be installed adjacent to the main FACP operator interface to meet UL 2017 standards.

For Canadian applications, the ANN-(R)LED annunciator must be installed in a secure room.

ANN-RLY Annunciator Module

The ANN-RLY relay module provides 10 programmable Form-C relays when used with a compatible FACP.

1.7 Getting Started

The following is a brief summary of the minimal steps involved in bringing an ES-1000X on-line:

- Install backbox and main circuit board (refer to “Mounting the Backbox” on page 21)
- Address and install intelligent devices (refer to the SLC Wiring Manual)
- Enter auto-programming (refer to “Autoprogram” on page 49)
- Resolve programming conflicts
- Go to point program to enter specific data (refer to “Point Program” on page 50). Use the right and left arrow keys to navigate between devices.

1.8 Telephone Requirements and Warnings

The following section applies to model ES-1000X(C) or when an IPOTS-COM communicator has been installed on the main PCB.

1.8.1 Telephone Circuitry

Ringer Equivalence Number (REN) = 0.3A
AC Impedance: 10.0 Mega Ohm
Complies with FCC Part 68
Mates with RJ31X Male Connector
Supervision Threshold: loss of phone line voltage for 2 minutes

The REN is used to determine the quantity of devices which may be connected to the telephone line. Excessive RENs on the telephone line may result in the devices not ringing in response to an incoming call. In most, but not all areas, the sum of the RENs should not exceed five (5.0). To be certain of the number of devices that may be connected to the line as determined by the total RENs, contact the telephone company to determine the maximum REN for the calling area.

Before connecting the control panel to the public switched telephone network, the installation of two RJ31X jacks is necessary. If trouble is experienced with this equipment, for repair or warranty information, please contact:

Manufacturer: Honeywell International, Inc.
One Fire-Lite Place
Northford, CT 06472
(203) 484-7161

Product Model Number: **ES-1000X**
FCC Registration Number: **US:1W6AL03AEVOLX**
Ringer Equivalence: **0.3A**

NOTE: This equipment complies with Part 68 of the FCC rules and the requirements adopted by the ACTA. On the inside of the FACP door is a label that contains, among other information, a product identifier in the format US:AAAEQ##TXXXX. If requested, this number must be provided to the telephone company.

Alarm dialing equipment must be able to seize the telephone line and place a call in an emergency situation. It must be able to do this even if other equipment (telephone, answering system, computer modem, etc.) already has the telephone line in use. To do so, alarm dialing equipment must be connected to a properly installed RJ31X jack that is electrically in series with and ahead of all other equipment attached to the same telephone line. If there are any questions concerning these instructions, consult the telephone company or a qualified installer about installing the RJ31X jack and alarm dialing equipment. Refer to “IPOTS-COM Communicator” on page 28 for an illustration of the proper installation of this equipment.

Important! *The DACT must not be used to dial a phone number that is call-forwarded.*

1.8.2 Telephone Company Rights and Warnings

The telephone company, under certain circumstances, may temporarily discontinue services and/or make changes in its facilities, services, equipment or procedures which may affect the operation of this control panel. However, the telephone company is required to give advance notice of such changes or interruptions.

If the control panel causes harm to the telephone network, the telephone company reserves the right to temporarily discontinue service. Advance notification will be provided except in cases when advance notice is not practical. In such cases, notification will be provided as soon as possible. The opportunity will be given to correct any problems and to file a complaint with the FCC if you believe it is necessary.

DO NOT CONNECT THIS PRODUCT TO COIN TELEPHONE, GROUND START, OR PARTY LINE SERVICES.

When the control panel activates, premise phones will be disconnected.

Two separate phone lines are required. Do not connect both telephone interfaces to the same telephone line.

The control panel must be connected to the public switched telephone network upstream (as first device) of any private telephone system at the protected premises.

A plug and jack used to connect this equipment to the premises wiring and telephone network must comply with the applicable FCC Part 68 rules and requirements adopted by ACTA. This equipment is designed to be connected to the telephone network or premises wiring using a compliant RJ31X male modular plug and compatible modular jack that is also compliant.

1.8.3 For Canadian Applications

The following is excerpted from CP-01 Issue 5:

NOTICE: The Industry Canada (IC) label identifies certified equipment. This certification means that the equipment meets certain telecommunications network protective, operational and safety requirements as prescribed in the appropriate Terminal Equipment Technical Requirements document(s). The Department does not guarantee the equipment will operate to the users's satisfaction.

Before installing this equipment, users should ensure that it is permissible to be connected to the facilities of the local telecommunications company. The equipment must also be installed using an acceptable method of connection. The customer should be aware that compliance with the above conditions may not prevent degradation of service in some situations.

Repairs to certified equipment should be made by an authorized Canadian maintenance facility designated by the supplier. Any repairs or alterations made by the user to this equipment, or equipment malfunctions, may give the telecommunications company cause to request the user to disconnect the equipment.

Users should ensure, for their own protection, that the electrical ground connections of the power utility, telephone lines and internal metallic water pipe system, if present, are connected together. This precaution may be particularly mportant in rural areas.

CAUTION

Users should not attempt to make such connections themselves, but should contact the appropriate electric inspections authority, or electrician.

"The Ringer Equivalence Number (REN) assigned to each terminal device provides an indication of the maximum number of terminals allowed to be connected to a telephone interface. the termination of an interface may consist of any combination of devices subject only to the requirement that the sum of the REN of all devices does not exceed 5."

DOC Compliance - "This digital apparatus does not exceed the Class A limits for radio noise emissions from digital apparatus set out in the Radio Interference Regulations of the Canadian Department of Communications."

Representative: NOTIFIER/FIRE•LITE, CANADA
3333 Unity Drive
Mississauga, Ontario L5L 3S6, Canada
Phone: (800) 627-3473

IC Certificate Number: 2132A-EVOLX

Ringer Equivalence Number (REN): 0.3A

Load Number: 2

Section 2: Installation

The cabinet may be either semi-flush or surface mounted. The cabinet mounts using two key slots and two 0.250” (6.35 mm) diameter holes located in the backbox. The key slots are located at the top of the backbox and the two securing holes at the bottom.

Carefully unpack the system and check for shipping damage. Mount the cabinet in a clean, dry, vibration-free area where extreme temperatures are not encountered. The area should be readily accessible with sufficient room to easily install and maintain the panel. Locate the top of the cabinet approximately 5 feet (1.5 m) above the floor with the hinge mounting on the left. Determine the number of conductors required for the devices to be installed. Sufficient knockouts are provided for wiring convenience. Select the appropriate knockout(s) and pull the conductors into the box. All wiring should be in accordance with the National and/or Local codes for fire alarm systems.

2.1 Mounting the Backbox

CAUTION: STATIC SENSITIVE COMPONENTS

THE CIRCUIT BOARD CONTAINS STATIC-SENSITIVE COMPONENTS. ALWAYS GROUND YOURSELF WITH A PROPER WRIST STRAP BEFORE HANDLING ANY BOARDS SO THAT STATIC CHARGES ARE REMOVED FROM THE BODY. USE STATIC SUPPRESSIVE PACKAGING TO PROTECT ELECTRONIC ASSEMBLIES.

To prevent damage to the circuit board and to facilitate backbox mounting, the chassis with main circuit board can be easily removed. Loosen the two 3/8” nuts securing the top flanges of the chassis, then slide the chassis up to free it from the lower tabs. Place the chassis assembly in a safe location until it can be reinstalled in the backbox.

1. Mark and pre-drill holes in the wall for the top keyhole mounting bolts using the dimensions illustrated in Figure 2.2 on page 22.
2. Install center top fasteners in the wall with the screw head protruding.
3. Place backbox over the top screws, level and secure.
4. Mark and drill the left and right upper and lower mounting holes.
   Note: Mounting holes are used for 16” O.C. stud mounting.
5. Install remaining fasteners and tighten.
6. When the location is dry and free of construction dust, install the chassis/circuit board assembly.
7. Mount the chassis to the backbox by aligning the two mounting tabs with the slots in the backbox, then position the two mounting hole tabs over the studs with nuts located in the upper portion of the backbox.
8. Slide the tabs located on the bottom of the chassis into the mounting slots in the backbox by pressing the chassis down.
9. Secure the chassis to the backbox by tightening the two mounting nuts (#10-32) at the top, and to ensure proper grounding, use a 3/8” nut driver or socket.
10. If the main circuit board is not already attached to the chassis, install it by positioning the ten mounting holes over the studs on the chassis and secure with the supplied screws.

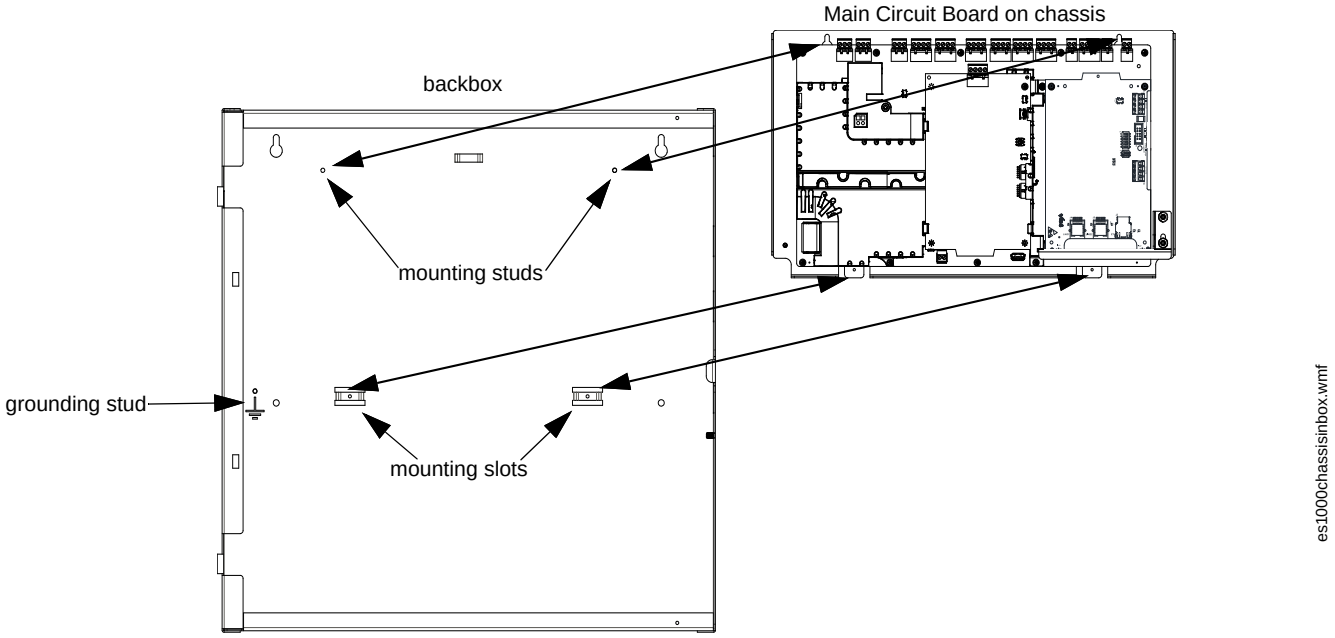

Figure 2.1 ES-1000X Chassis Removal and Installation

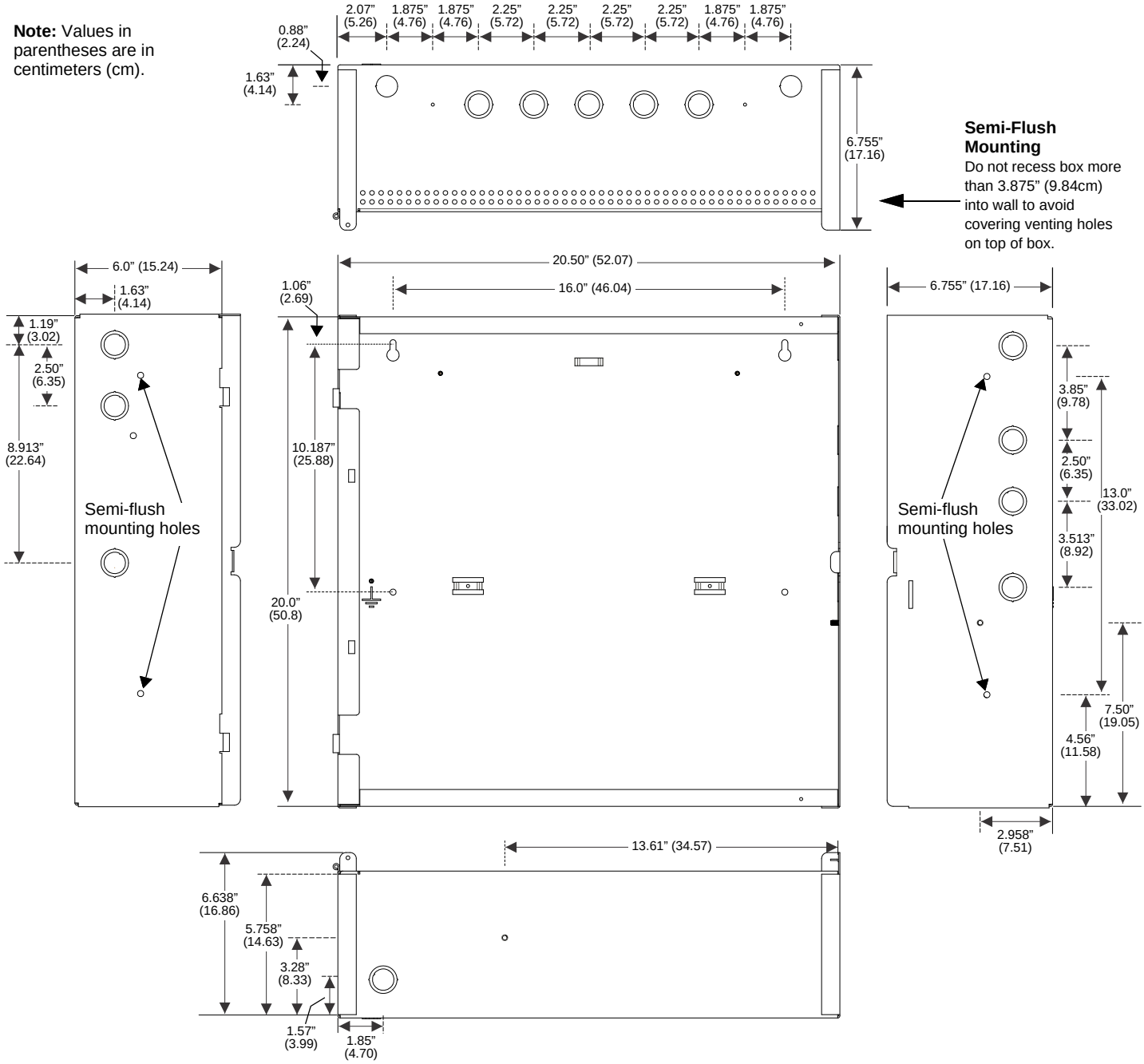

Figure 2.2 ES-1000X Cabinet Mounting

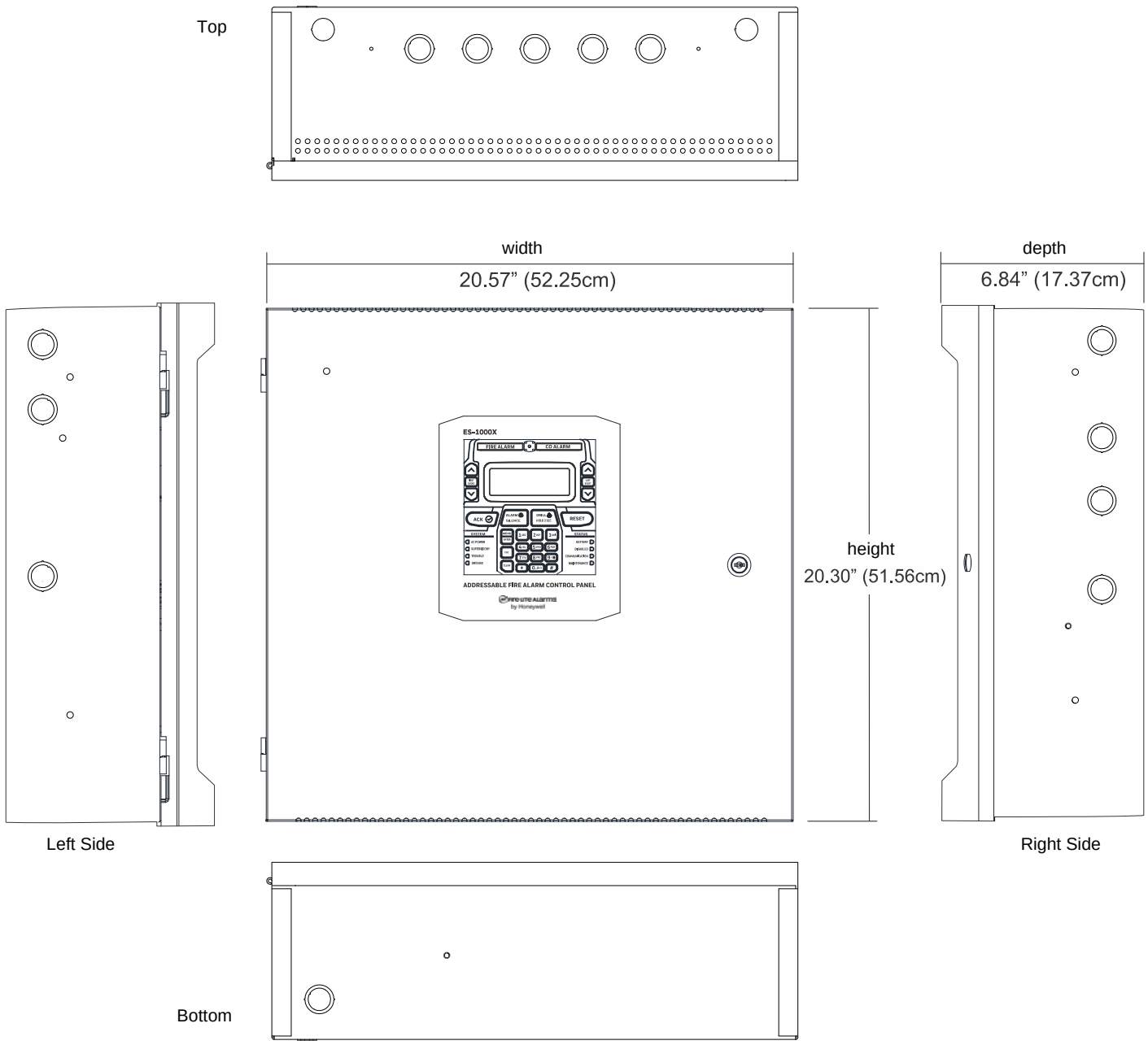

Figure 2.3 Cabinet Dimensions

2.2 Power

WARNING: RISK OF EQUIPMENT DAMAGE AND PERSONAL INJURY

SEVERAL DIFFERENT SOURCES OF POWER CAN BE CONNECTED TO THIS PANEL. DISCONNECT ALL SOURCES OF POWER BEFORE SERVICING. THE PANEL AND ASSOCIATED EQUIPMENT MAY BE DAMAGED BY REMOVING AND/OR INSERTING CARDS, MODULES OR INTERCONNECTING CABLES WHILE THIS UNIT IS ENERGIZED.

2.2.1 AC Power and Earth Ground Connection

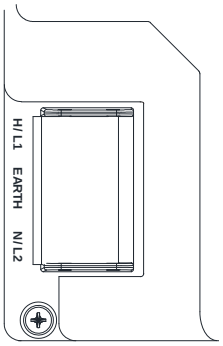

Primary power required for the FACP is 120 or 240 VAC, 50/60 Hz, 3.0 amps. The FACP will auto-detect the voltage used. No special switch or jumper is required to select AC power. Overcurrent protection for this circuit must comply with Article 760 of the National Electrical Code (NEC) and/or local codes. Use 14 AWG (2.00 mm^2) or larger wire with 600 volt insulation rating. Make certain that the AC mains circuit breaker is off before wiring any connections between the mains and the control panel. Connect wiring from the AC mains to TB13 on the FACP, being careful to observe proper connections.

Remove the two keps nuts from the grounding stud in the backbox. Connect the incoming earth ground wire to supplied cable #71073 with a wire nut. Position the ring terminal end over the grounding stud. Secure with one of the keps nuts. Place the ring terminal from the other supplied ground cable #71073 over the ground stud and secure with the second keps nut. Wire the ground cable to the bottom position of TB11. Refer to Figure 2.1 on page 21 for location of the stud. Ensure that the ground for AC mains is the first cable installed, closest to the backbox. This connection is vital in reducing the panel's susceptibility to transients generated by lightning and electrostatic discharge. Apply AC power to the panel only after the system is completely installed and visually checked. *Note that AC power must be applied to the panel before installing the battery interconnect cable (refer to the following section).*

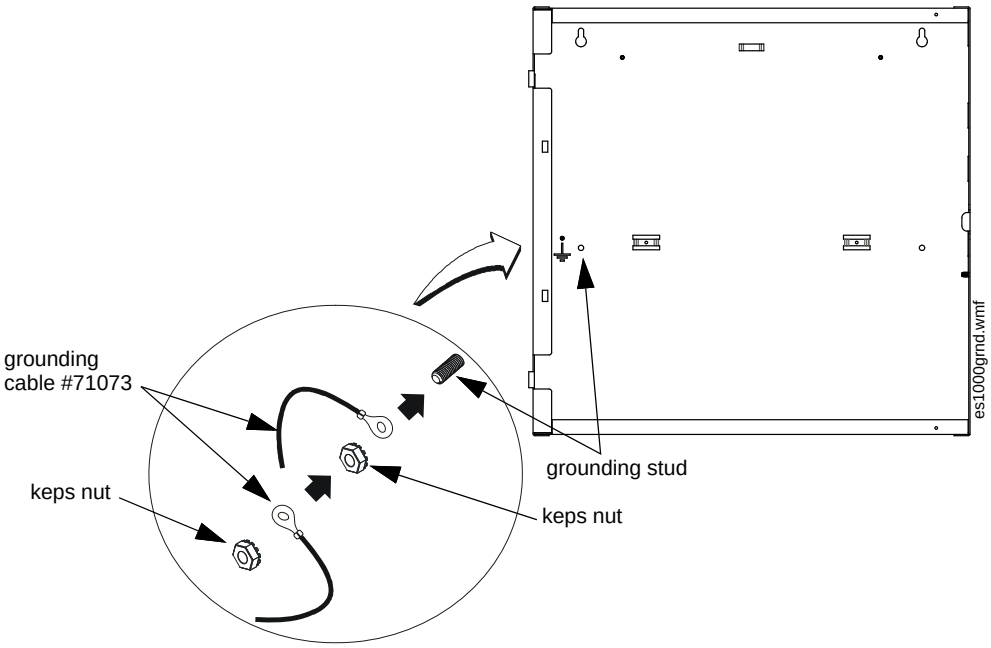

Figure 2.4 Earth Ground Connection

2.2.2 Battery Power

The batteries must be sealed lead acid type. Before connecting the batteries to the FACP, make certain that the interconnect cable between the batteries is not connected. Do not connect the interconnect cable until the system is completely installed. Observe polarity when connecting the batteries. Connect the battery cable to TB15 on the main circuit board. Refer to "Power Supply Calculations" on page 125, for calculation of the correct battery rating.

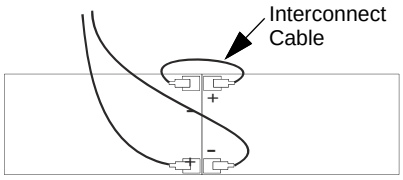

WARNING: RISK OF PERSONAL INJURY

BATTERY CONTAINS SULFURIC ACID WHICH CAN CAUSE SEVERE BURNS TO THE SKIN AND EYES AND CAN DESTROY FABRICS. IF CONTACT IS MADE WITH SULFURIC ACID, IMMEDIATELY FLUSH THE SKIN OR EYES WITH WATER FOR 15 MINUTES AND SEEK IMMEDIATE MEDICAL ATTENTION.

2.2.3 Special Application DC Power Output Connection

All Special Application DC power outputs are power-limited (refer to “UL Power-limited Wiring Requirements” on page 27). TB11, TB18 and TB13 offer 1.0 amps max, 24VDC nominal filtered power, programmable as resettable or non-resettable. PWR1 at TB11 can be wired/programmed as Class A or Class B power.

CAUTION: CHECK FOR SHORTS

ENSURE THERE ARE NO SHORTS AT ANY OF THE SPECIAL APPLICATION POWER TERMINALS BEFORE APPLYING POWER TO THE PANEL.

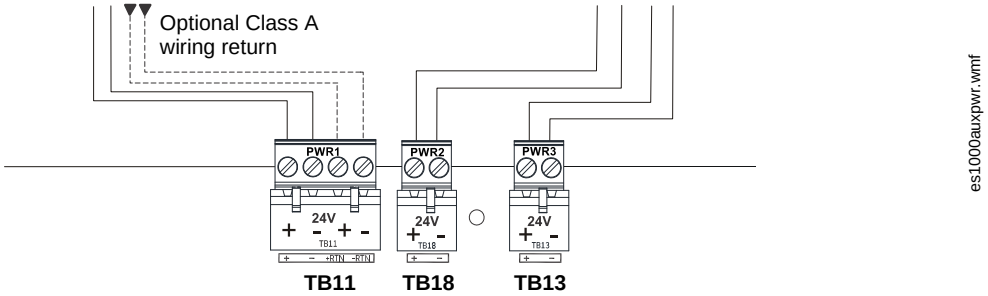

Figure 2.5 Special Application Power Outputs - 24 VDC

2.3 Relays

The FACP provides two programmable Form-C relays and one fixed fail-safe Form-C trouble relay.Note that relay connections may be power-limited or non-power-limited, provided that 0.25” spacing is maintained between conductors of power-limited and non-power-limited circuits. Refer “UL Power-limited Wiring Requirements” on page 27.

Note that the programmable relay labeled as Relay 1 is factory default programmed as Alarm and programmable Relay 3 is factory default programmed as Supervisory.
The relay labeled Relay 2 is fixed as a Trouble relay and cannot be changed. It is a fail-safe relay which will transfer on any trouble or total power failure.

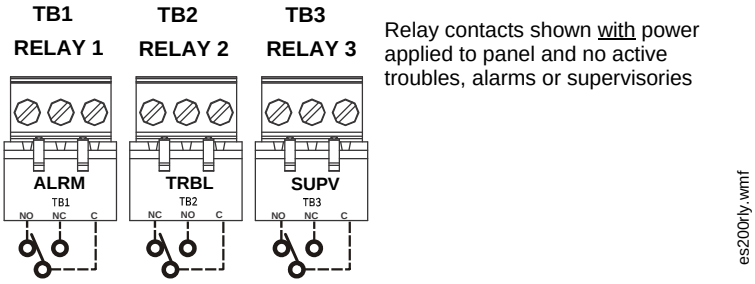

Figure 2.6 Relay Terminals

2.4 Notification Appliance Circuits

The control panel provides four Class B or four Class A NACs (Notification Appliance Circuits). Each circuit is capable of 3.0 amps of current. Total current in alarm for all external devices cannot exceed 8.0 amps (refer to “Calculating the System Current Load” on page 125). Use UL listed 24 VDC notification appliances only. Circuits are supervised and power-limited. Refer to the *Device Compatibility Document* for a listing of compatible notification appliances. The NACs, which are located on the main circuit board, may be expanded via the FL-PS Series power supplies.

The following sections describe the configuration and wiring of Class B and Class A Notification Appliance Circuits on the ES-1000X main circuit board.

2.4.1 Class B NAC Wiring

four Class B Notification Appliance Circuits, supervised and power-limited - 4.7 kΩ, ½ watt P/N:71252 UL listed

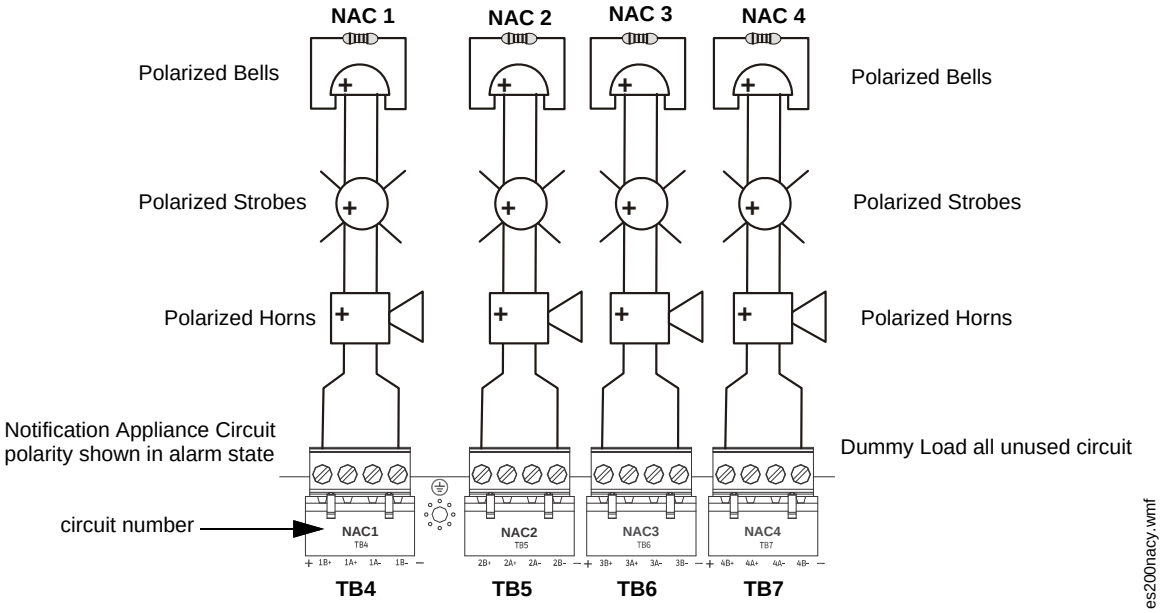

Figure 2.7 NAC Class B Wiring

2.4.2 Class A NAC Wiring

4 Class A Notification Appliance Circuits, supervised and power-limited

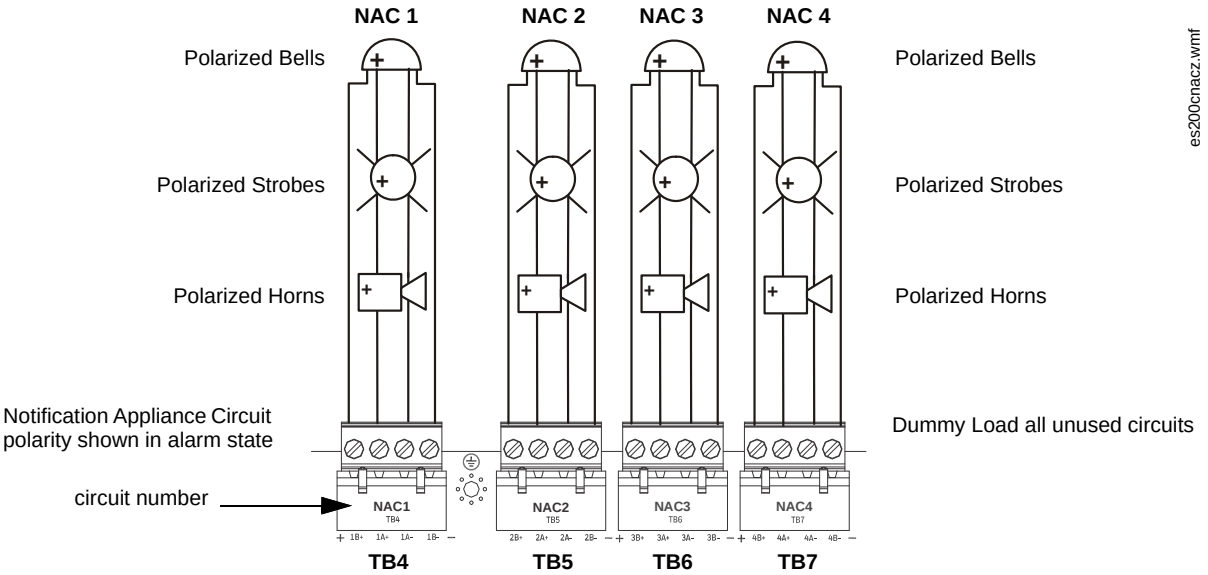

Figure 2.8 NAC Class A Wiring

2.5 Remote Synchronization Output

Synchronization is a feature that controls the activation of notification appliances in such a way that all devices will turn on and off at exactly the same time. This is particularly critical when activating strobes which must be synchronized to avoid random activation and a potential hazard to individuals. Devices connected directly to the control panel's NACs can be synchronized as described in "Type" on page 73.

Notification appliances connected to FL-PS NAC power supplies require synchronization with the FACP's devices. This can be accomplished by connecting the Remote Synchronization Output from TB8 of the ES-1000X to the sync input of the FL-PS Power Supply. The 24 VDC signal from TB8 follows, that is mimics, the signal on NAC1. This allows the devices connected to the power supply to be synchronized with the devices connected to NAC1 on the FACP.

The Remote Synchronization Output is power-limited and supervised (refer to "UL Power-limited Wiring Requirements" on page 27) and can be wired in Class B or Class A. A 4.7 kΩ ELR resistor must be connected to the end of the wiring at the remote power supply for Class B wiring. Supervision of the remote synchronization is automatically enabled when the remote sync output is enabled. Supervision will be disabled if the output is disabled. For more information on enabling the remote sync output, refer to page 100.

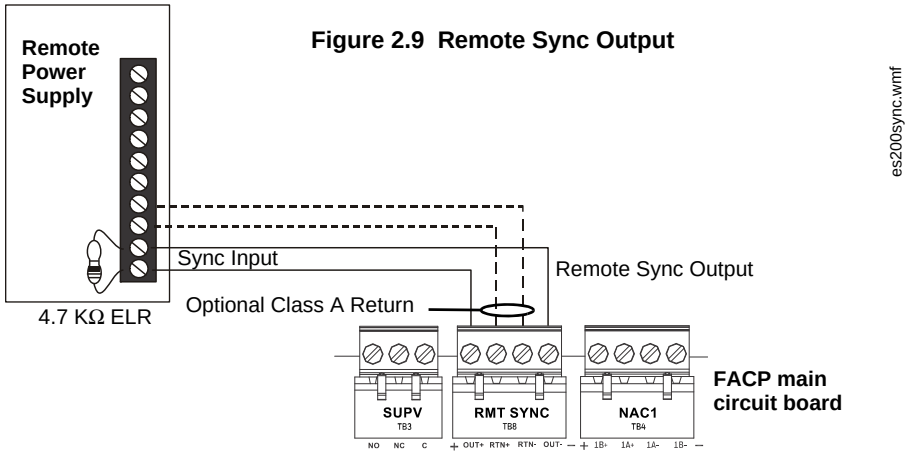

Figure 2.9 Remote Sync Output

2.6 UL Power-limited Wiring Requirements

Power-limited and nonpower-limited circuit wiring must remain separated in the cabinet. All power-limited circuit wiring must remain at least 0.25” (6.35 mm) away from any nonpower-limited circuit wiring and non-power-limited circuit wiring must enter and exit the cabinet through different knockouts and/or conduits. When connecting the ground cables, be sure that the AC mains ground is the first one installed, closest to the backbox. A typical wiring diagram for the ES-1000X is shown below.

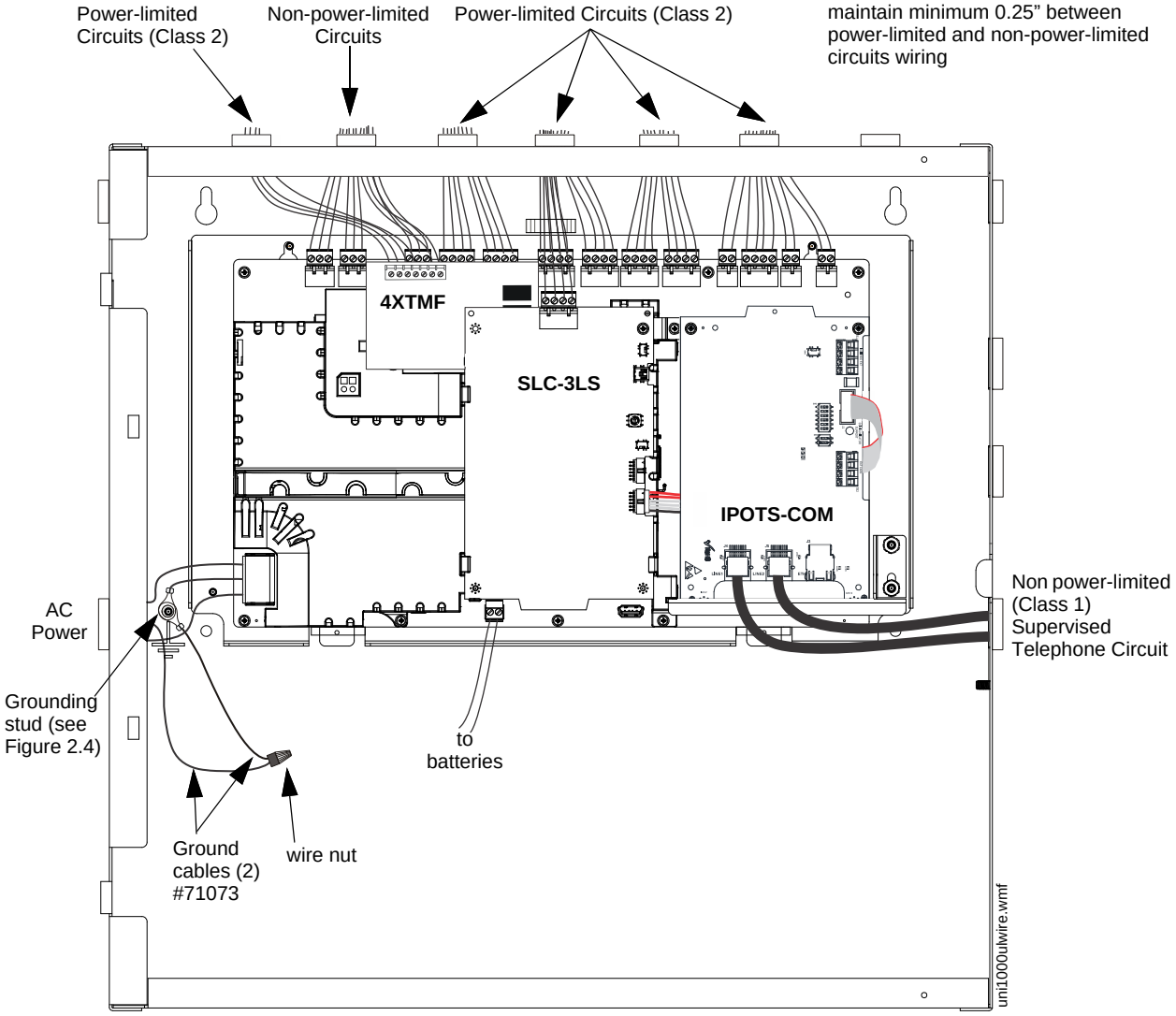

Figure 2.10 Typical UL Power-limited Wiring Requirements

2.7 IPOTS-COM Communicator

Two independent telephone lines can be connected to the control panel via the IPOTS-COM Optional Phone/IP Communication Module. Telephone line control/command is made possible via double line seizure as well as usage of an RJ31X style interconnection. *Note that it is critical that the IPOTS-COM Digital Communicator be located as the first device on the incoming telephone circuit to properly function.* **Important!** The IPOTS-COM must *not* be used to dial a phone number that is call-forwarded.

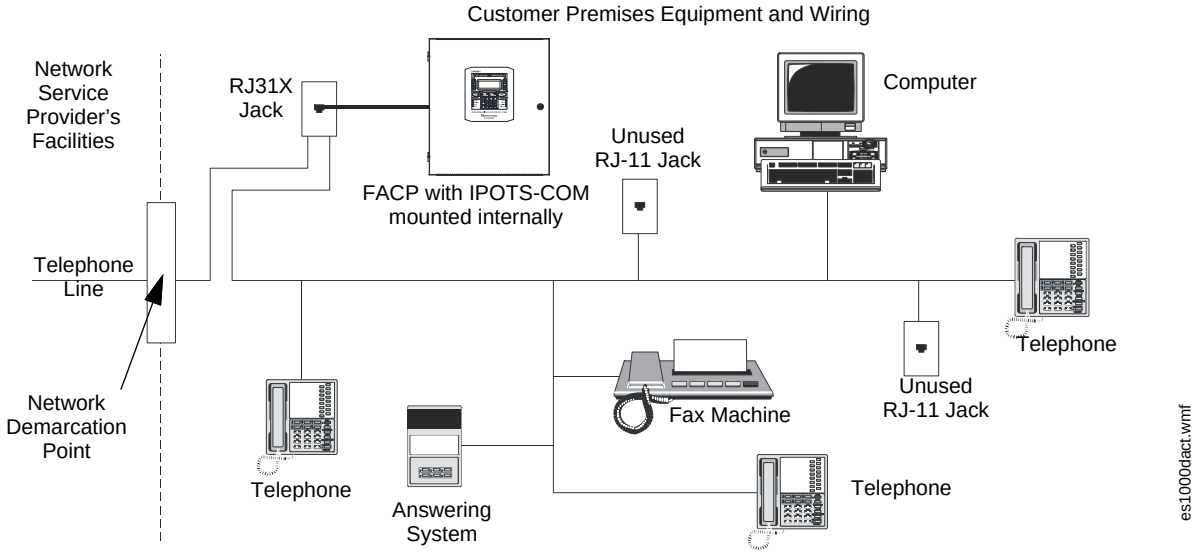

Figure 2.11 Communicator Installation

Wiring

Connection and wiring of two phone lines is required as shown below.

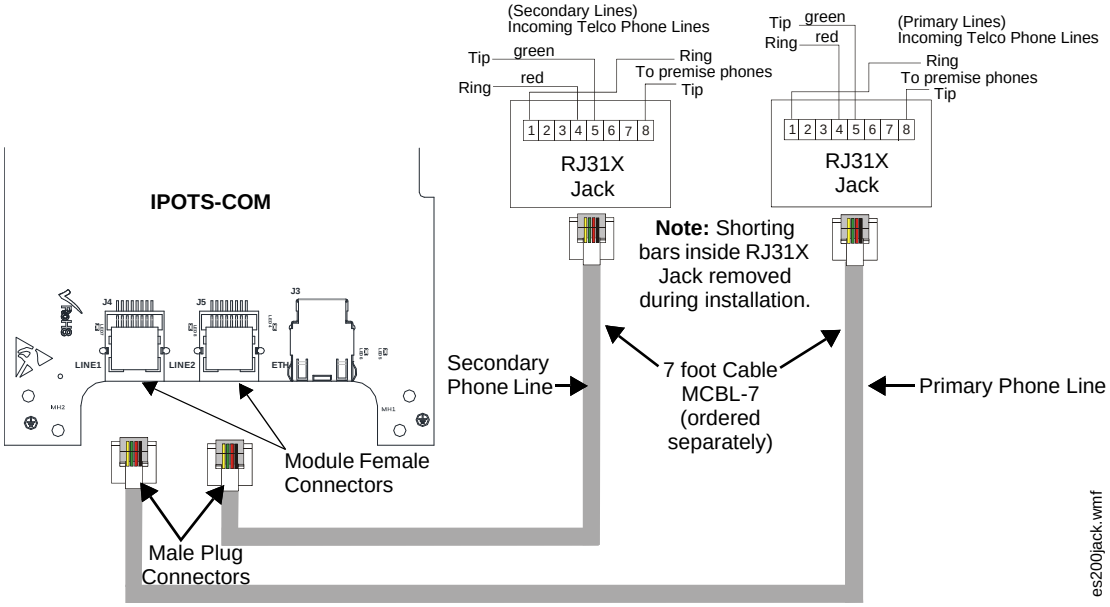

Figure 2.12 Wiring Phone Jacks

Dip Switches

There are two configurable dip switches on the IPOTS-COM communicator.

- SW3: 2-position DIP switch- Factory Settings- Do not change unless instructed to do so by Honeywell.
- SW2: 6-position DIP switch- FUTURE USE- No configuration necessary.

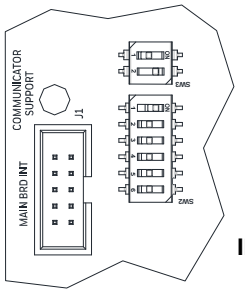

Figure 2.13 IPOTS-COM DIP Switches

Remote Connection Feature

For compliance with ULC-S527, the ribbon cable at J1 (refer to Figure 2.10 for location) must be disconnected when testing the FACP. This will prevent communication with the central station and trigger a trouble at the panel. When testing is complete, reconnect the ribbon cable and cycle power on the panel. This will clear the trouble.

2.8 Optional Module Installation

WARNING: RISK OF ELECTRIC SHOCK AND EQUIPMENT DAMAGE
DISCONNECT ALL SOURCES OF POWER (AC AND DC) BEFORE INSTALLING OR REMOVING ANY MODULES OR WIRING.

2.8.1 SLC-3LS Loop Expander Module Installation

The SLC-3LS Card provides an additional SLC loop to the FACP. A maximum of 2 cards is allowed in the system, offering a total of 3 SLC loops. If an IPOTS-COM is also used in the system, it should be installed after installing any SLC-3LS cards. Refer to the *SLC-3LS Installation Document* #LS10195-000FL-E for installation and wiring instructions.

2.8.2 4XTMF Transmitter Module Installation

The 4XTMF provides a supervised output for a local energy municipal box transmitter in addition to alarm and trouble reverse polarity. A jumper option allows the reverse polarity circuit to open with a system trouble condition if no alarm condition exists. A disable switch allows disabling of the transmitter output during testing to prevent accidental calling of the monitoring service.

Local Energy Municipal Box Service (NFPA 72 Auxiliary Fire Alarm Systems):
Supervisory Current: 5.0 mA
Trip Current: 350 mA (subtracted from notification appliance power)
Coil Voltage: 3.65 VDC
Maximum Coil Resistance: 14.6 ohms
Maximum allowable wire resistance between panel and trip coil: 3 ohms
Municipal Box wiring can leave the building

Remote Station Service (NFPA 72 Remote Station Fire Alarm Systems) - Intended for connection to a polarity reversal circuit or a Remote Station receiving unit having compatible ratings:
Maximum load for each circuit: 10 mA
Reverse polarity output voltage: 24 VDC
Remote Alarm and Remote Trouble wiring can leave the building

Before installing the module, place the disconnect switch to the right (disconnect) position to prevent accidental activation of the municipal box. Note that a Disconnect LED will illuminate after the module is installed in the ES-1000X. In addition, the System Trouble LED will turn on to indicate the Disconnect condition.

Note: The 4XTMF Module is not directly suitable for transmitting a reverse polarity supervisory signal. For applications using reverse polarity of a supervisory signal, refer to the Keltron Wiring Document #52776.

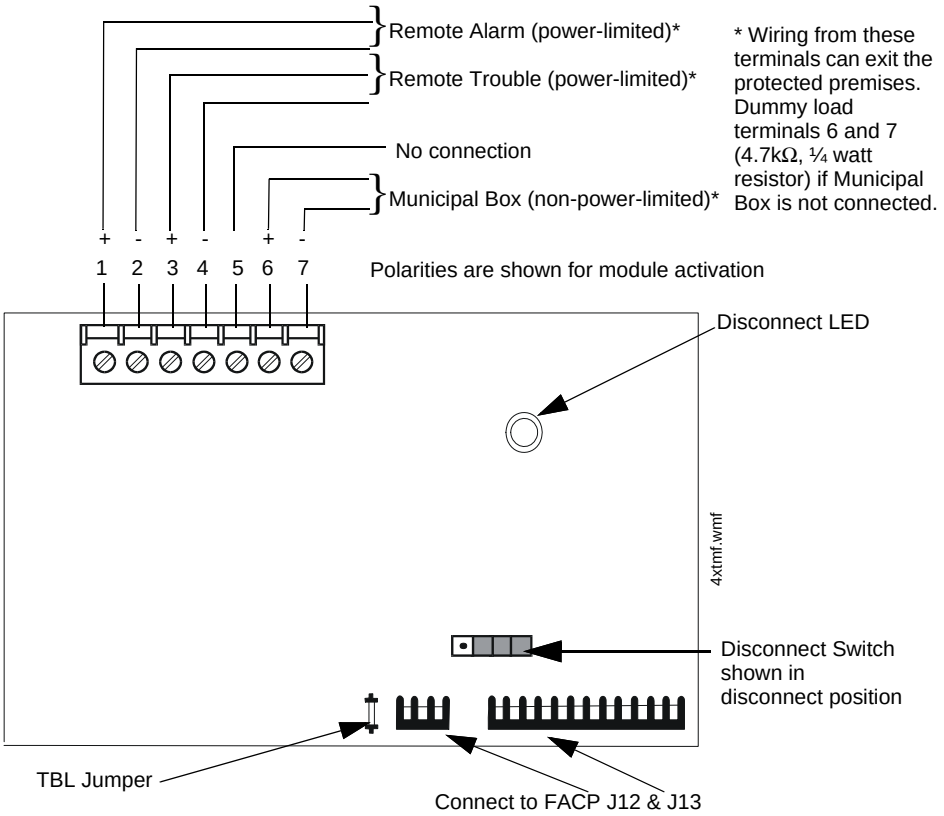

Figure 2.14 4XTMF Transmitter Module

The following steps must be followed when installing the 4XTMF module:

1. Remove all power (Primary and Secondary) from the FACP before installing 4XTMF.
2. Carefully plug the connectors on the 4XTMF module into connectors J12 and J13 on the ES-1000X main circuit board, being careful not to bend any pins.
3. Secure 4XTMF module to standoffs with supplied screws.
4. Slide SW2 on the ES-1000X main circuit board to the down position.
5. Enable 4XTMF supervision in user programming. Refer to “4XTMF Supervision” on page 77.
6. Reapply power to the FACP.
7. For proper 4XTMF operation, the output relays must be programmed for the factory default settings: Alarm Relay 1, Trouble Relay 2 and Supervisory Relay 3.
8. When the installation has been complete, enable the 4XTMF module by sliding the disconnect switch on the module to the left.
9. Test system for proper operation.

2.8.3 ANN-BUS Annunciators/Modules

ANN-BUS Wiring

This section contains information on calculating ANN-BUS wire distances and the types of wiring configurations (Class B).

■ Calculating Wiring Distance for ANN-BUS Modules

The following instructions will guide the installer in determining the type of wire and the maximum wiring distance that can be used with FACP ANN-BUS accessory modules.

To calculate the wire gauge that must be used to connect ANN-BUS modules to the FACP, it is necessary to calculate the total worst case current draw for all modules on a single 4-conductor bus. The total worst case current draw is calculated by adding the individual worst case currents for each module. The individual worst case values are shown in the following table:

Model Number	Worst Case Current Draw[1]
ANN-80 LCD Annunciator	0.040 amps
ANN-100 LCD Annunciator	0.025 amps
ANN-S/PG Serial/Parallel Printer Interface Module	0.040 amps
ANN-I/O LED Driver Module	0.200 amps
ANN-(R)LED Annunciator Module	0.068 amps
ANN-RLY Relay Module	0.075 amps

1 When powering the ANN-BUS from one of the (non-resettable) DC power outputs at TB11, the total worst case current draw cannot exceed 1.0 amp. If sharing this DC output with other devices, the worst case current drawn by these devices must be combined with the ANN-BUS current draw, and the total cannot exceed 1.0 amp. If the total current demand exceeds 1.0 amp, refer to “Powering ANN-BUS Devices from an Auxiliary Power Supply” on page 32.

In general, the wire length is limited by resistance, but for heavier wire gauges, capacitance is the limiting factor. Maximum length can never be more than 6,000 feet (1,800 m), regardless of gauge used. The following formulas are used to generate the wire distances

$$\text{Maximum Resistance (Ohms)} = \frac{\text{2.0 Volts}}{\text{Total Worst Case Current Draw (amps)}}$$

$$\text{Maximum Wire Length (feet) (6,000 feet maximum)} = \frac{\text{Maximum Resistance (Ohms)}}{\text{Rpu}} \times 500$$

where: Rpu = Ohms per 1,000 feet for various Wire Gauges (see table below)

Wire Gauge	Ohms per 1,000 feet (Rpu)
22	16.2
18	6.4
16	4.02
14	2.54

Exception: When using the ANN-RLY module, the installer must ensure that the maximum 24VDC power line drop does not exceed 0.3 volts. This results in the following wiring limitations:

Wire Gauge	Maximum Wire Length
18	312 feet
16	497 feet
14	787 feet
12	1,250 feet

Wiring Distance Calculation Example:

Suppose a system is configured with the following ANN-BUS modules:

- 3 ANN-80 Remote Fire Annunciators
- 1 ANN-S/PG Serial/Parallel Printer Interface Module

The total worst case current is calculated as follows:

ANN-80 Current Draw	= 3 X 0.040 amps	= 0.120 amps
ANN-S/PG Current Draw	= 1 X.0.040 amps	= 0.040 amps
Total Worst Case Current Draw		= 0.160 amps

■ Wiring Configuration

Figure 2.15 illustrates the wiring between the FACP's Primary ANN-BUS and ANN-BUS devices.

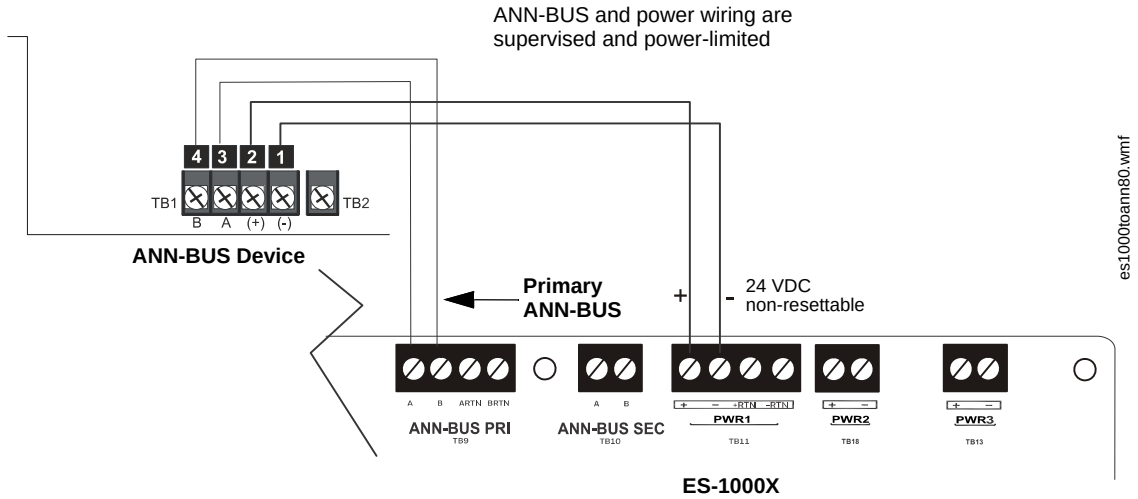

Figure 2.15 Primary ANN-BUS wiring to ANN-BUS Device

Figure 2.16 illustrates the wiring between the FACP's Secondary ANN-BUS and ANN-BUS devices.

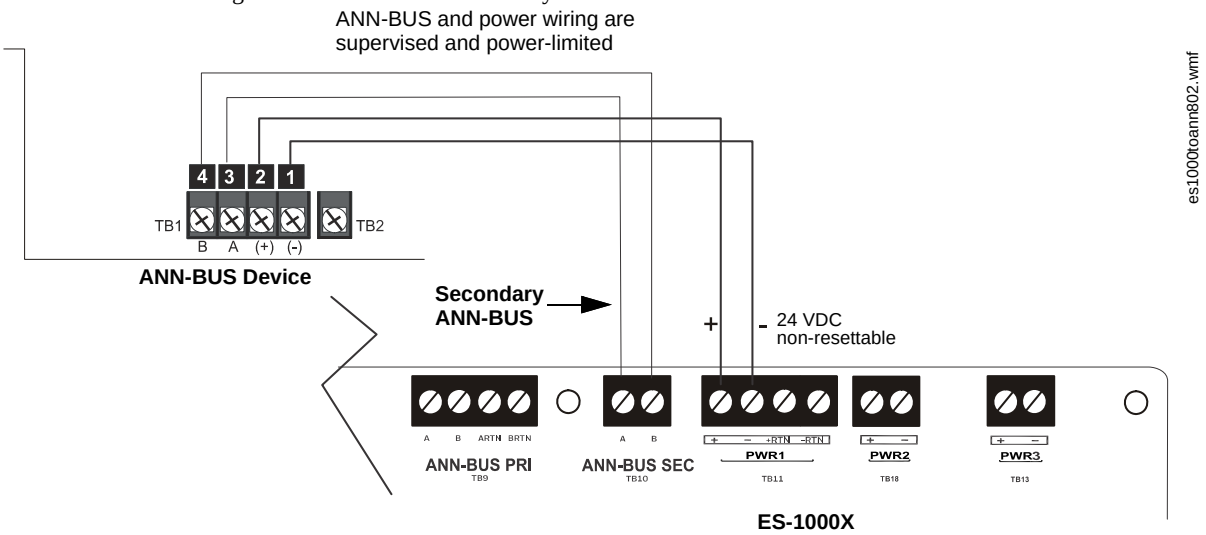

Figure 2.16 Secondary ANN-BUS wiring to ANN-BUS Device

■ Powering Both ANN-BUS Circuits Simultaneously

When simultaneously using the Primary and Secondary ANN-BUS circuits on the FACP, power can be shared from the non-resettable power output on TB11. Alternately, one ANN-BUS can be powered by the resettable power output (TB13 or TB18) once it is reconfigured as Non-resettable Power in panel programming. This provides the benefit of independently acting power-limiting for the two ANN-BUS circuits (required for Canadian applications).

■ Powering ANN-BUS Devices from an Auxiliary Power Supply

Figure 2.17 illustrates the powering of ANN-BUS devices from an auxiliary power supply such as the FL-PS10, when the total ANN-BUS power requirements exceed the panel's DC power output capability.

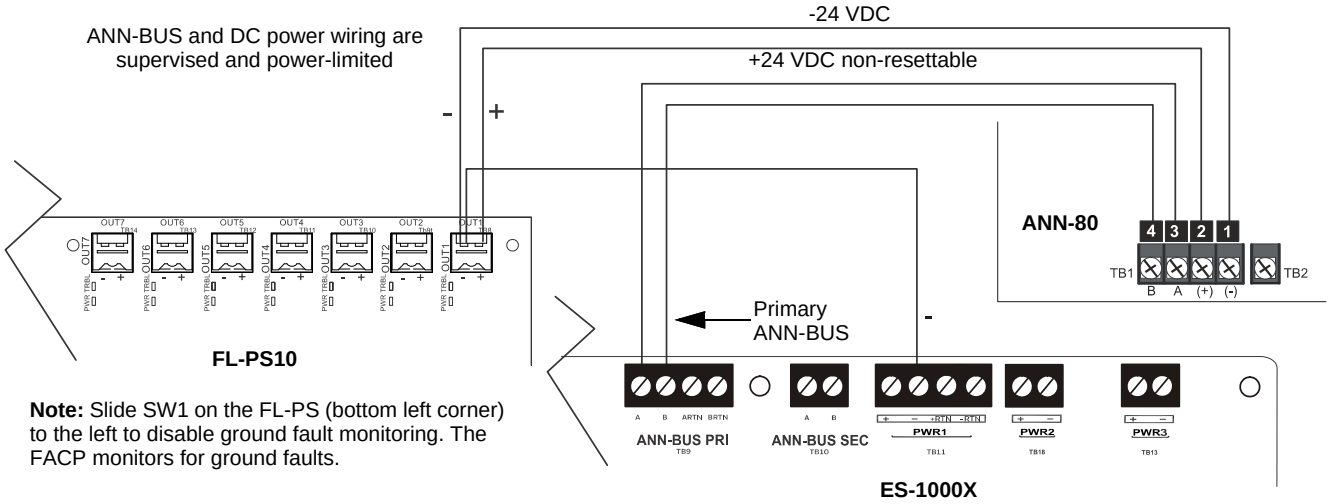

Figure 2.17 Powering ANN-BUS Devices from the FL-PS10

ANN-BUS Device Addressing

Each ANN-BUS device requires a unique address (ID Number) in order to communicate with the FACP. A 5 position DIP switch on each device is used to set this address. The address set for these devices must also be programmed at the FACP for the specific device (refer to the programming section titled "ANN-BUS Setup" on page 87).

A maximum of 8 devices can be connected to each FACP ANN-BUS communication circuit. Device addresses do not need to be sequential and can be set to any number between *01* and *08*. This applies to both ANN-BUS communication circuits. Note that *00* is not a valid address. The following table shows the DIP switch setting for each address.

NOTE: Address (ID Number) DIP switches on some devices may have more than 5 switch positions. Refer to the specific documentation for more information on DIP switches 6 and higher**.**

Address	Switch 5[1]	Switch 4	Switch 3	Switch 2	Switch 1
not valid	OFF	OFF	OFF	OFF	OFF
01	OFF	OFF	OFF	OFF	ON
02	OFF	OFF	OFF	ON	OFF
03	OFF	OFF	OFF	ON	ON
04	OFF	OFF	ON	OFF	OFF
05	OFF	OFF	ON	OFF	ON
06	OFF	OFF	ON	ON	OFF
07	OFF	OFF	ON	ON	ON
08	OFF	ON	OFF	OFF	OFF

1 Switch 5 must be set to OFF for ANN-BUS devices to be recognized.

ANN-80 Remote Fire Annunciator

■ Specifications

- Operating Voltage Range: 18 VDC to 28 VDC
- Current Consumption @ 24 VDC nominal (filtered and non-resettable):
  - ✓ Normal/Standby (no activity): 37.0 mA
  - ✓ Trouble: 39.0 mA
  - ✓ Alarm: 40.0 mA
  - ✓ AC Fail (not backlit): 15.0 mA
- For use indoors in a dry location

■ Installation

Ensure that all power (AC and DC) has been removed from the FACP before installing the annunciator.

■ Opening/Closing Annunciator

The following procedure details the steps used to open the annunciator in order to access the terminal block and DIP switches (refer to figure below):

1. Turn the key switch to the ON (Unlocked) position by turning the key counter-clockwise.
2. Push in the snap latch located on the right side of the unit while pulling the cover open.
3. To close the cover, make certain the key switch is in the ON (Unlocked) position. Swing the cover closed, snapping it shut.
4. Turn the key switch to the OFF (Locked) position by turning clockwise and remove the key.

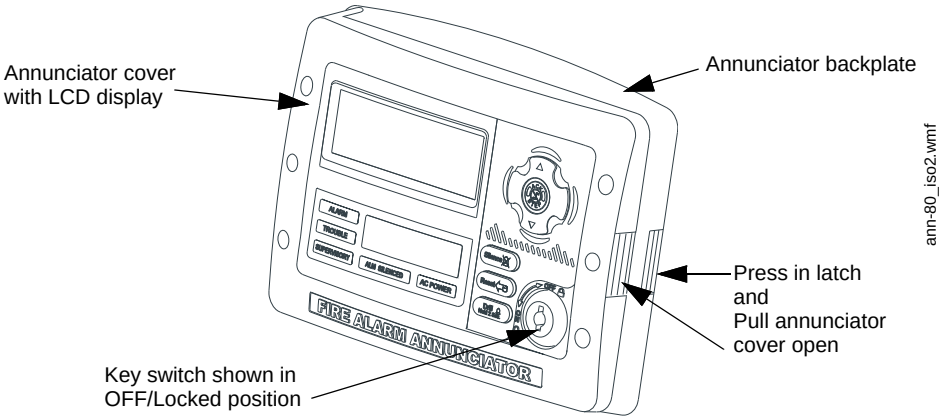

■ Mounting

The ANN-80 can be surface or semi-flush mounted to a single, double or 4” square electrical box. Select and remove the appropriate knock-out(s), pull the necessary wires through the knockouts and mount the annunciator in or on the wall depending on the type of installation desired.

The ANN-SB80KIT(-R/-B/-W) is an available mounting kit for the ANN-80 annunciator. The kit comes with a surface backbox and surface wedge for angled viewing. The two pieces can be used separately or can be stacked together.

The ANN-80 cover must be attached to the annunciator backplate before mounting the annunciator to the electrical box/wall. The cover cannot be reattached or removed after the annunciator has been mounted.

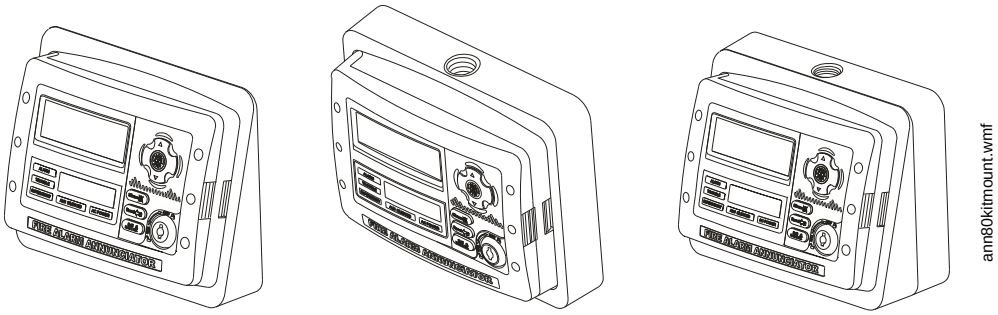

Annunciator mounted on surface wedge from the ANN-SB80KIT

Annunciator mounted on surface backbox from the ANN-SB80KIT

Annunciator mounted on stacked surface wedge and backbox from the ANN-SB80KIT

■ Wiring ANN-80 to FACP

The following steps can be used as a guide to wire the annunciator. Make certain all power has been removed from the FACP prior to annunciator installation.

1. Route wires from hole in backplate, through wiring channel and then to ANN-80 terminal block TB1

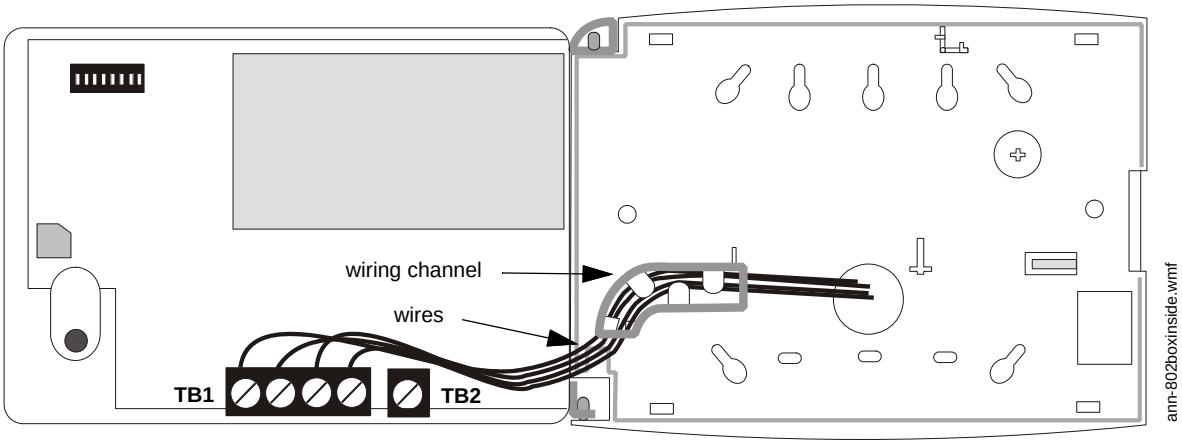

2. Remove appropriate amount of wire insulation
3. Connect the wiring from the FACP ANN-BUS to annunciator TB1 terminals 3 (A) & 4 (B). Make certain to connect A to A and B to B
4. If appropriate, connect the wiring going to the next device on the ANN-BUS to TB1 terminals 3 & 4. Make certain to connect A to A and B to B
5. Connect the wiring from the 24 VDC power source to annunciator TB1 terminals 1 (-) & 2 (+). Make certain to observe proper polarity
6. If appropriate, connect the power wiring going to the next device to terminals 1 (-) & 2 (+). Make certain to observe proper polarity
7. After all connections are made, remove extra wire from inside of annunciator by dressing it neatly through wire channel, with any excess wire pushed back through hole into electrical box

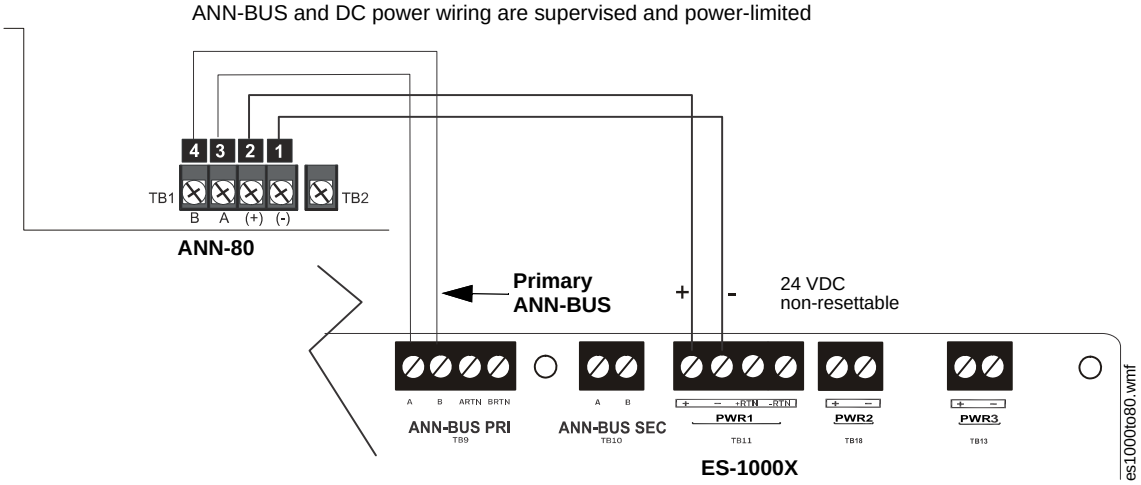

Figure 2.18 ANN-80 Wiring to FACP

The following table shows the ANN-80 connections to the ES-1000X. Note that older models of the ANN-80 will only have one terminal block and TB2 is not available.

ES-1000X	ANN-80 (TB1)
Terminal GND (-) on TB11	Terminal 1 (-)
Terminal PWR (+) on TB11	Terminal 2 (+)
Terminal Data (A) on TB9	Terminal 3 (A)
Terminal Data (B) on TB9	Terminal 4 (B)
ES-1000X	**ANN-80 (TB2)**
Earth Ground	Terminal 1

■ Programming

Following installation and wiring of the ANN-80 LCD annunciator to the FACP, the annunciator must be added to the system via FACP programming. Refer to the programming section titled “ANN-BUS Setup” on page 87 in this manual for detailed programming information. Select the LCD option for programming.

■ Trouble Response

If the ANN-80 is installed but the ANN-BUS is not enabled at the FACP, the ANN-80 will indicate a trouble condition by NOT turning on its AC Power indicator. The LCD will also display *Key Bus Trouble* and the piezo will sound approximately once every 10 seconds. Note that the FACP will provide no indication of an ANN-80 trouble.

To clear the ANN-80 trouble condition, enable the ANN-BUS and program the address corresponding to the address set on the ANN-80 at the FACP.

ANN-100 Remote Fire Annunciator

■ Specifications

- Operating Voltage: 24 VDC
- Current
  - Standby: 20 mA
  - Alarm: 25 mA
- Ambient Temperature: 32°F to 120°F (0°C to 49°C)
- Max. Wiring Distance from FACP: 6,000 ft. (1,800 m)
- Mounting: Surface or Flush-mount
- Dimensions: 12-1/4”W x 11-1/2”H x 7/8”D (31.1 cm W x 29.2 cm H x 2.2 cm D)
- For indoor use in a dry location only

The following table shows the ANN-100 connections to the ES-1000X.

ES-1000X	ANN-100 (TB1)
Terminal GND (-) on TB11	Terminal 1 (-)
Terminal PWR (+) on TB11	Terminal 2 (+)
Terminal Data (A) on TB9	Terminal 3 (A)
Terminal Data (B) on TB9	Terminal 4 (B)

■ Programming

Following installation and wiring of the ANN-100 LCD annunciator to the FACP, the annunciator must be added to the system via FACP programming. Refer to the programming section titled “ANN-BUS Setup” on page 87 in this manual for detailed programming information.

■ Trouble Response

If the ANN-100 is installed but the ANN-BUS is not enabled at the FACP, the ANN-100 will indicate a trouble condition by NOT turning on its AC Power indicator. The LCD will also display *Key Bus Trouble* and the piezo will sound approximately once every 10 seconds. Note that the FACP will provide no indication of an ANN-100 trouble.

To clear the ANN-100 trouble condition, enable the ANN-BUS and program the address corresponding to the address set on the ANN-100 at the FACP.

ANN-S/PG Serial/Parallel Interface Module

■ Installation

1. Ensure that all power (AC and DC) has been removed from the FACP.
2. Connect the ANN-S/PG to the FACP as illustrated in Figure 2.19

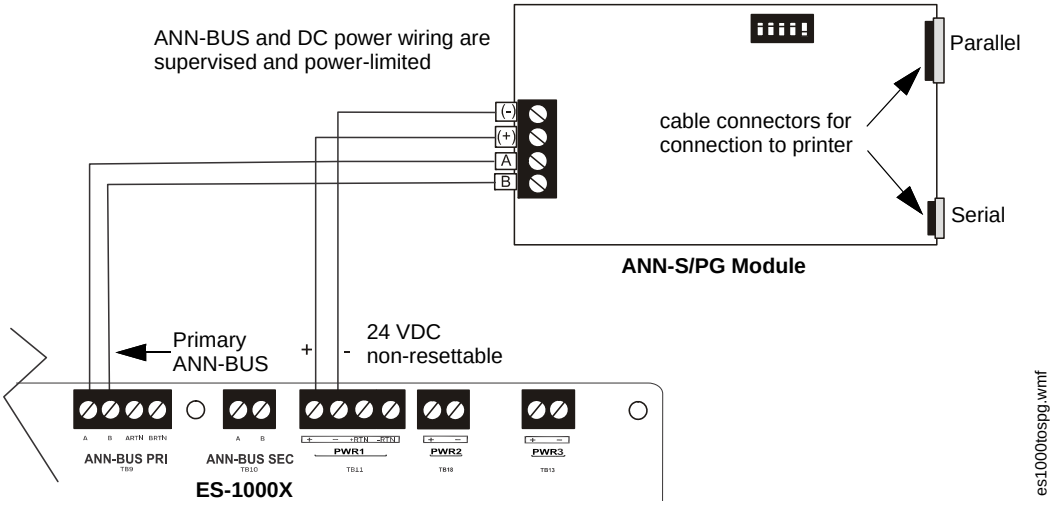

Figure 2.19 ANN-S/PG Connection to FACP

3. Using the DIP switches on the back of the ANN-S/PG module, assign an ID number (address) to the module.

4. Select the address and configuration options for the ANN-S/PG module as described in the Programming section of this manual (refer to “ANN-BUS Setup” on page 87).
   Note that the Auto-configure feature allows the programmer to quickly bring all installed ANN-BUS modules online (refer to “Auto-Configure” on page 93).
5. Connect a printer to the ANN-S/PG Parallel or Serial connectors (refer to Figure 2.19). Only one printer can be connected.

■ Specifications

- Operating Voltage: 24 VDC
- Current (Alarm and Standby): 45 mA
- Ambient Temperature: 32°F to 120°F (0°C to 49°C)
- Max. Wiring Distance from FACP: 6,000 ft. (1,800 m)
- Mounting: Surface
- Dimensions: 6”W x 7-3/4”H x 1-7/16”D (15.2 cm W x 19.7 cm H x 3.7 cm D)
- For indoor use in a dry location only

■ Connecting a PRN-7 Printer

Remote printers require a primary AC power source. If required for the fire alarm system configuration (for example, a Proprietary Fire Alarm System), a remote printer requires a secondary power source (battery backup). Since a secondary power source is not provided as a standard feature, a separate UL-listed Uninterruptible Power Supply (UPS) should be used. The building emergency power supply may be used, as long as it meets the power continuity requirements of NFPA 72. Refer to NFPA 72 for further details.

Connect the remote printer to the FACP via the ANN-S/PG module using a standard DB-9 cable. One end of the cable will plug into the DB-9 connector on the PRN-7 printer and the other end plugs into the serial connector on the ANN-S/PG module.

■ Setting Printer Options

Refer to the documentation supplied with the PRN-7 printer for instructions on using the printer menu controls. Set the printer options (under the menu area) as shown in the following table:

Option	Setting	Option	Setting
Font	HS Draft	CPI	10CPI
LPI	6 LPI	Skip	0.5
ESC Character	ESC	Emulate	LQ-2550
Bidirectional Copy	ON	I/O	
CG-TAB	Graphic	Buffer	64K
Country	E-US ASCII	Serial	
Auto CR	OFF	Baud	9600 or 2400
Color Option	Not Installed	Format	7 Bit, Even, 1 Stop
Formien		Protocol	XON/XOFF
Lines	6LPI=60	Character Set	Standard
Standard	Exec 10.5	SI.Zero	On
Barcode	Off	Auto LF	On
Barcode	Unsecured		

Table 2.1 PRN-7 Setup Options

■ PRN-6F Printer Installation

When connected to the FACP via the ANN-S/PG module, the PRN-6F prints the status changes within the control panel and time-stamps the printout with the time of day and date that the event occurred. It provides 80 columns of data on standard 9” x 11” tractor-feed paper. This section contains information on connecting a printer to the control panel and setting the printer options.

Connecting PRN-6F Printer

Remote printers require a primary AC power source. If required for the fire alarm system configuration (for example, a Proprietary Fire Alarm System), a remote printer requires a secondary power source (battery backup). Since a secondary power source is not provided as a standard feature, a separate UL-listed Uninterruptible Power Supply (UPS) should be used. The building emergency power supply may be used, as long as it meets the power continuity requirements of NFPA 72. Refer to NFPA 72 for further details.

Connect the remote printer to the FACP via the ANN-S/PG module using a standard DB-25 cable. One end of the cable will plug into the DB-25 connector on the PRN printer and the other end plugs into the parallel connector on the ANN-S/PG module. Note that the 9-pin DB-9 port on the ANN-S/PG is used to connect a serial printer. The 25-pin port is used for a Centronics parallel printer cable. Connect either a serial or parallel printer, but not both at the same time.

Setting Printer Options

Refer to the documentation supplied with the PRN-6F printer for instructions on using the printer menu controls. Set the printer options (under the menu area) as shown in the following table:

Option	Setting	Option	Setting
Font	HS Draft	CPI	10CPI
LPI	6 LPI	Skip	0.5
ESC Character	ESC	Emulate	Epson FX-850
Bidirectional Copy	ON	I/O	
CG-TAB	Graphic	Buffer	40K
Country	E-US ASCII	Serial	
Auto CR	OFF	Baud	9600 or 2400
Color Option	Not Installed	Format	7 Bit, Even, 1 Stop
Formien		Protocol	XON/XOFF
Lines	6LPI=60	Character Set	Standard
Standard	Exec 10.5	SI.Zero	On
		Auto LF	On
		PAPER	
		BIN 1	12/72”
		BIN 2	12/72”
		SINGLE	12/72”
		PUSH TRA	12/72”
		PULL TRA	12/72”
		PAP ROLL	12/72”

Table 2.2 PRN-6 Setup Options

ANN-I/O LED Driver Module

The ANN-I/O must be mounted within 20’ (6.1m) of the FACP in the same room and wired in conduit.

■ ANN-I/O Board Layout

Figure 2.20 illustrates the ANN-I/O board showing locations of screw terminals for connection to the FACP, pin connectors for connecting LEDs and the DIP switch for selecting the ANN-BUS ID number.

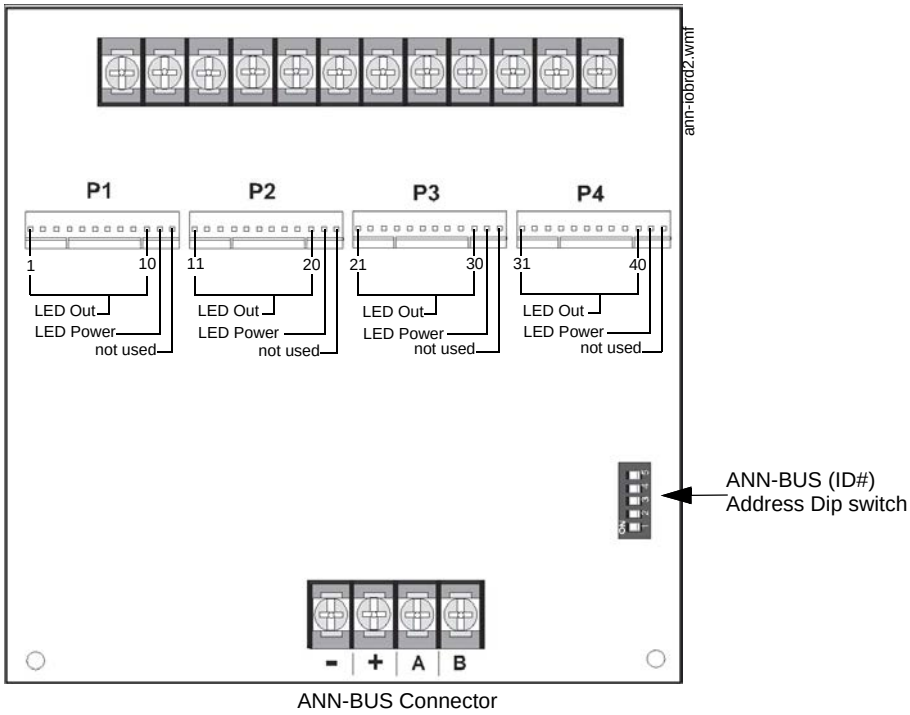

Figure 2.20 ANN-I/O Board Layout

■ Specifications

- Max. ANN-BUS Voltage: 24 VDC
- Max. Current:
  - ✓ Alarm: 200 mA
  - ✓ Standby: 35 mA
  - ✓ Each LED: 10 mA
- Operating Temperature: 32°F to 120°F (0°C to 49°C)
- Must be installed adjacent to the main FACP operator interface to meet UL 2017 standards
- For indoor use in a dry location only

■ ANN-I/O Connection to FACP

The ANN-I/O connects to the FACP via the ANN-BUS as illustrated in Figure 2.21. After the ANN-I/O is connected to the panel, it must be added to the system via FACP programming. Refer to the section titled “ANN-I/O Options” on page 88.

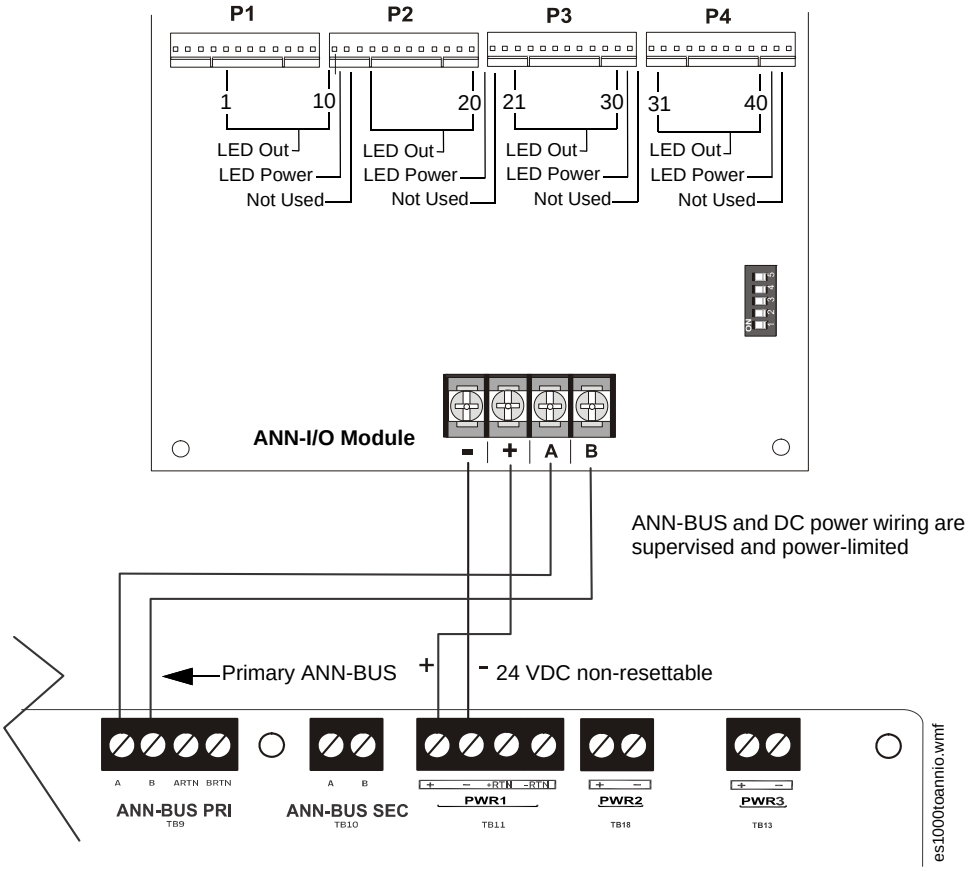

Figure 2.21 ANN-I/O Connection to FACP

■ ANN-I/O Module LED Wiring

There are four 12-pin connectors on the ANN-I/O module for connecting LEDs. Each set of 10 LEDs get their power from Pin 11 of the corresponding connector. Internal resistors are sized so that there is approximately 10 mA of current for each LED. No series resistors are required. LED outputs can be mapped to output circuits. Refer to the programming section titled “ANN-I/O Options” on page 88 of this manual.

The LEDs are wired as illustrated in Figure 2.22. Note that the illustration depicts only connectors P1 and P2. Wiring is identical for P3 (LEDs 21-30) and P4 (LEDs 31-40).

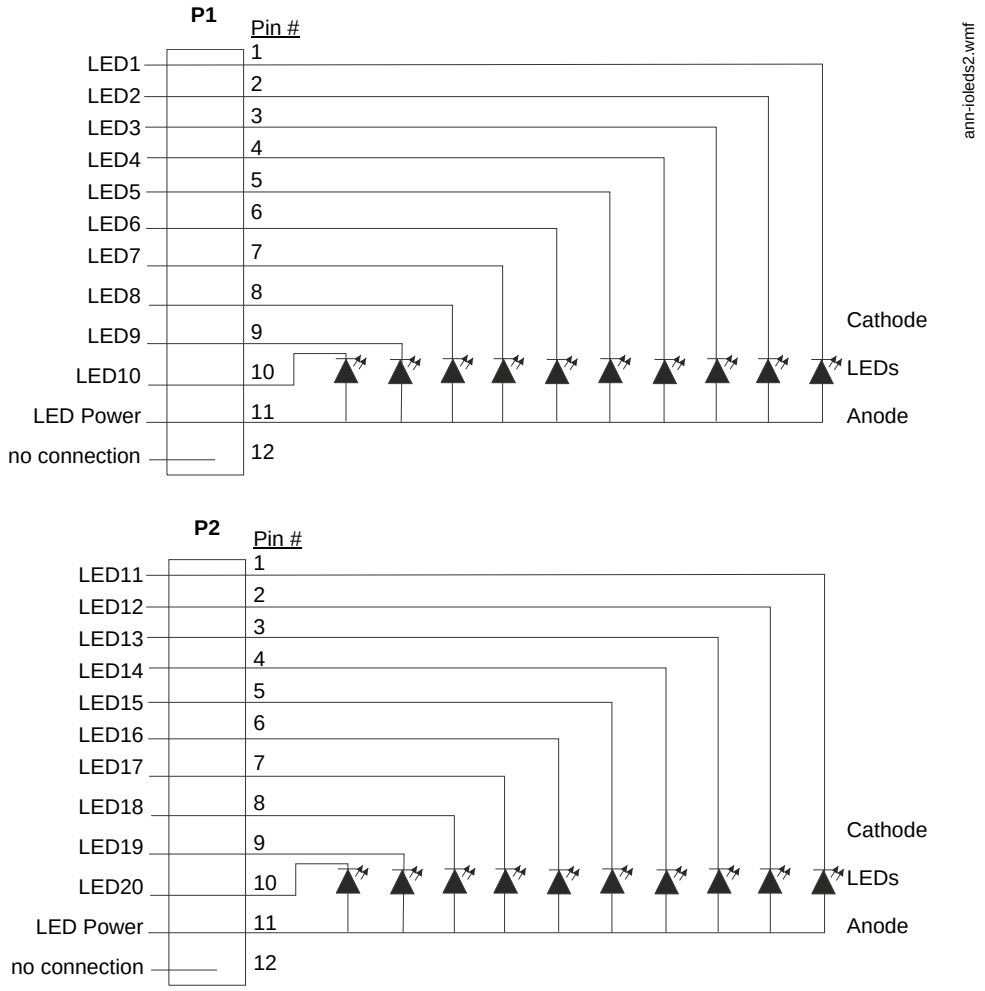

Figure 2.22 ANN-I/O LED Wiring

ANN-LED Annunciator Module

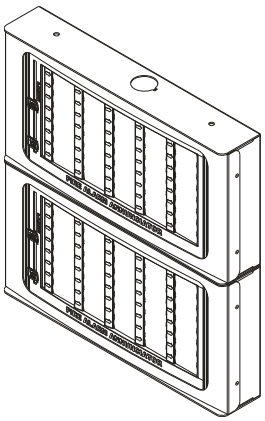

Figure 2.23 ANN-LEDs (shown in possible stacked configuration)

■ Specifications

- Max. ANN-BUS Voltage: 24 VDC
- Max. Current:
  - ✓ Alarm: 68 mA
  - ✓ Standby: 28 mA
- Operating Temperature: 32°F to 120°F (0°C to 49°C)
- Must be installed adjacent to the main FACP operator interface to meet UL 2017 standards
- For indoor use in a dry location only
- For Canadian applications, the ANN-LED must be installed in a secure/protected room

■ Mounting/Installation

The ANN-LED Module is supplied with a metal backbox, mounting bracket, and cover. The ANN-LED must be mounted within 20’ (6.1m) of the FACP in the same room and wired in conduit. Refer to the *ANN-LED Installation Document #53032* for more information.

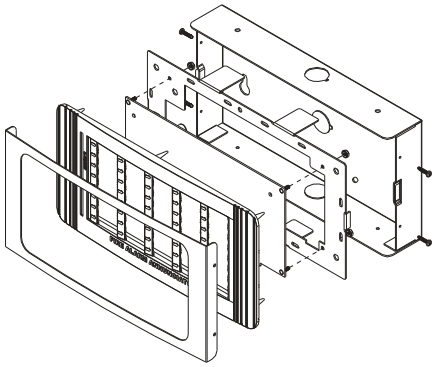

ann-led.wmf

Figure 2.24 Exploded View of ANN-LED

■ ANN-LED Board Layout and Connection to FACP

Figure 2.25 illustrates the ANN-LED board showing locations of screw terminals for connection to the FACP and the DIP switches for selecting the ANN-BUS ID number.

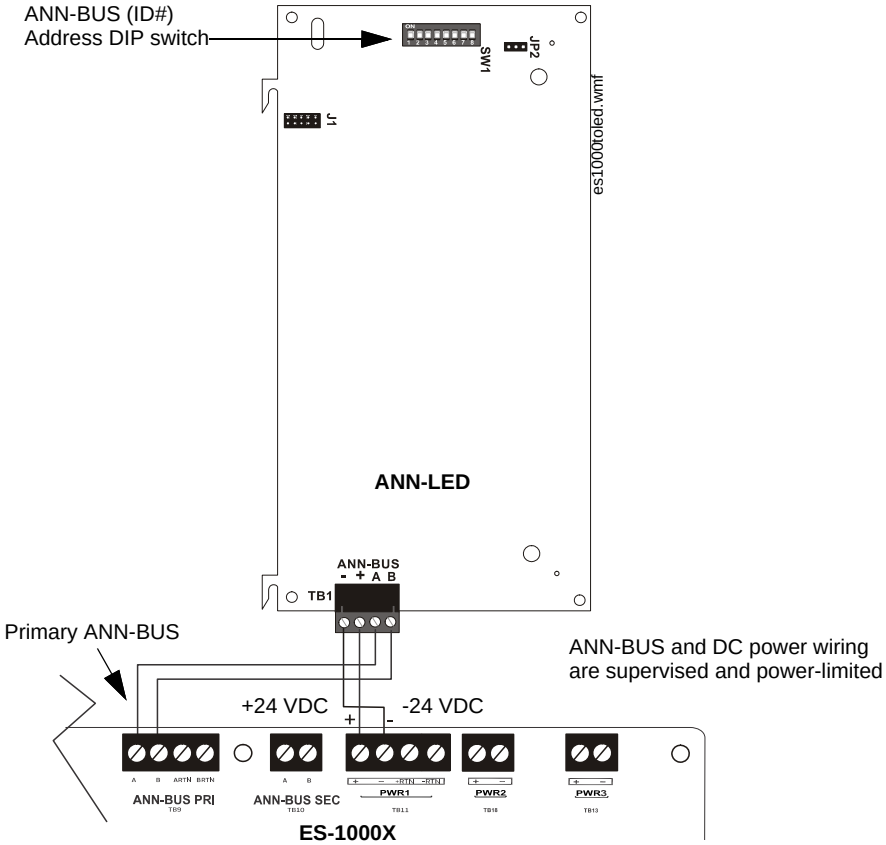

Figure 2.25 ANN-LED Board Layout and Connection to FACP

ANN-RLY Annunciator Module

■ Specifications

- Operating Voltage: 24 VDC
- Max. Current:
  - ✓ Alarm: 75 mA
  - ✓ Standby: 15 mA
- Operating Temperature: 32°F to 120°F (0°C to 49°C)
- For indoor use in a dry location only

■ Mounting/Installation

The ANN-RLY relay module can be mounted inside the ROME Series enclosure. Refer to the *ROME Series Installation Document #53530* for mounting in the separate backbox.

ROME Series Installation using ANN-MBRLY mounting bracket

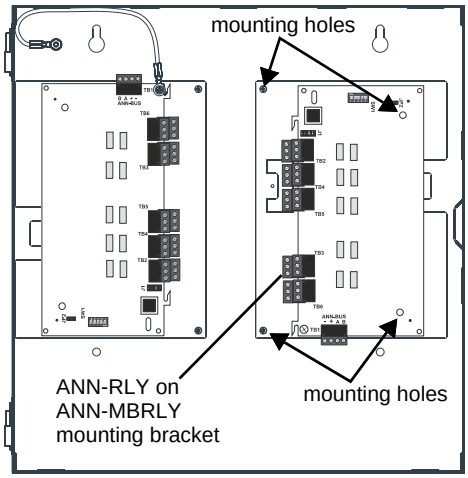

Figure 2.26 ANN-RLY Mounting Options

■ ANN-RLY Board Layout and Connection to FACP

Figure 2.27 illustrates the ANN-RLY board showing locations of screw terminals for connection to the FACP and the DIP switches for selecting the ANN-BUS ID number.

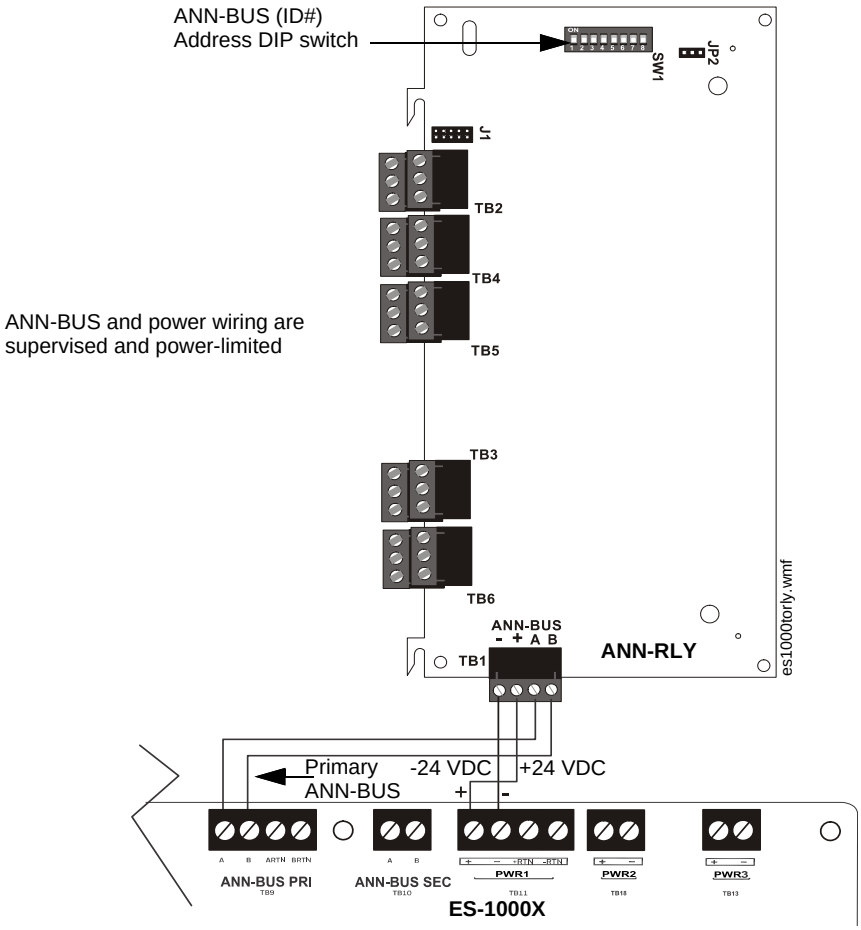

Figure 2.27 ANN-RLY Board Layout and Connection to FACP

2.8.4 Printer

A parallel printer may be connected to the FACP using the optional ANN-S/PG Serial/Parallel Interface Module. The printer can be used to provide a hard-copy printout of real-time events, history file and walktest data. Installation of the device requires panel programming to allow the FACP to communicate with the device. Refer to “ANN-S/PG Serial/Parallel Interface Module” on page 18 for installation details. Refer to “ANN-BUS Setup” on page 87 for programming information.

CAUTION: POSSIBLE EQUIPMENT DAMAGE

DO NOT CONNECT A PRINTER OR PC TO THE ES-1000X FACP IF A GROUND FAULT (ZERO IMPEDANCE TO GROUND) EXISTS ON THE CONTROL PANEL. CIRCUIT DAMAGE MAY RESULT. REMOVE ALL POWER (PRIMARY AND SECONDARY) BEFORE INSTALLING OR REMOVING ANY WIRING.

Printer Configuration

Refer to the documentation supplied with the printer for pertinent information about printer setup. Set the printer’s options as listed in the following table:

COMMUNICATION SETUP	
BUFFER:	LARGE
DATA BITS:	7
PARITY:	EVEN
STOP BIT:	1 STOP
BAUD RATE:	2400/4800/9600
AUTOMATIC LINE FEED	NO
AUTOMATIC CARRIAGE RETURN	NO

Table 2.3 Printer Options

2.8.5 W-GATE(A) Wireless Gateway

The W-GATE(A) connects to the SLC-3LS module. The W-GATE(A) can be powered by either the SLC or an external 24 VDC power source. A maximum of 100 wireless devices can be used in the system. Refer to the *SWIFT® Smart Wireless Integrated Fire Technology Manual* for more information.

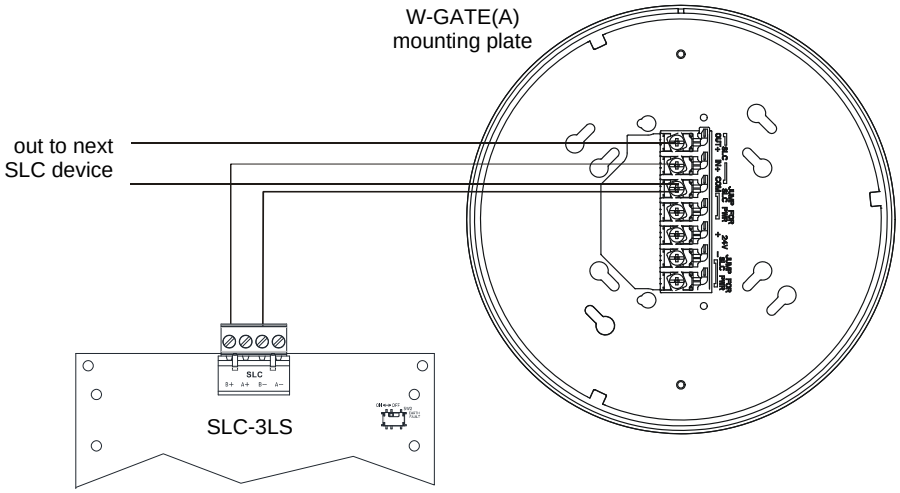

Figure 2.28 W-GATE(A) SLC Connection

Section 3: Programming

NOTICE TO USERS, INSTALLERS, AUTHORITIES HAVING JURISDICTION AND OTHER INVOLVED PARTIES			
This product incorporates field-programmable software. In order for the product to comply with the requirements in the Standard for Control Units and Accessories for Fire Alarm Systems, UL 864, certain programming features or options must be limited to specific values or not used at all as indicated below:			
Program feature or option	**Permitted in UL864/ ULC-S527 /ULC-S559? (Y/N)**	**Possible settings**	**Settings permitted in UL864 / ULC-S527/ULC-S559**
Pre-Signal Delay Timer	Y	Refer to “Pre-signal Delay” on page 71. • 0-180 seconds	60-180 seconds
AC Fail Delay Timer	Y	Refer to “AC Loss Delay” on page 71. • 0-23 hours	1-3 hours
Canadian Option	N (UL864) Y (ULC-S527) Y (ULC-S559)	Refer to “Canadian Option” on page 76. • On • Off	Off (UL864) On (ULC-S527) On (ULC-S559)
Control Module Delay	N	Refer to “Control Module Delay” on page 72. • Control Module Delay = 0 (factory default): no delay in Control Module activation • Control Module Delay = 1-180: delays control module activation from 1-180 seconds	Control Module Delay = 0 for no delay in control module activation
Silence Inhibit Timer	Y	Refer to “Silence Inhibit” on page 75. • Silence Inhibit Yes/Silence Inhibit No • 0-300 seconds (in Canadian mode)	Any setting is permitted for UL864. For ULC applications, the timer must be set to 300 seconds.
Trouble Reminder (when used with SWIFT wireless devices)	Y	Refer to “Trouble Reminder” on page 77 • 4 hours • 24 hours	4 hours
4XTMF Supervision	Y	Refer to “4XTMF Supervision” on page 77. • Enabled Yes • Enabled No	Enabled Yes when the 4XTMF module is installed.
Supervised Phone Line	Y	Refer to “Supervised Phone Line” on page 79. • Supervised Yes • Supervised No	Supervised Yes if transmission method is POTS.
Ethernet Fault	Y	Refer to “Ethernet Fault” on page 81. • 1-60 minutes	1 minute
Test Time Interval	Y	Refer to “Test Time Interval” on page 82. • 24 hours • 12 hours • 8 hours • 6 hours • 4 hours • 3 hours • 2 hours • 1 hour	• 6 hours • 4 hours • 3 hours • 2 hours • 1 hour
Ethernet Supervision Options	Y	Refer to “Supervision Settings” on page 83 • NFPA 2010 Dual Path: Supervision Interval: 24 Hours • NFPA 2010 Sole Path: Supervision Interval: 5 min • NFPA 2013 Dual Path: Supervision Interval: 6 Hours • NFPA 2013 Sole Path: Supervision Interval: 1 Hour	For UL864 applications: • 5 min • 6 hours • 1 hour For ULC applications, the supervision interval for panels communicating in Ethernet-only method is fixed at 3 minutes and cannot be changed, regardless of setting option, when the Canadian Option is enabled.
Trouble Call Limit	N	Refer to “Trouble Report Limit (Dialer Runaway Prevention)” on page 83. • Trouble Call Limit = 0 (factory default): unlimited calling to Central Station for any trouble condition • Trouble Call Limit = 1 - 99: limits call for each unique trouble to from 1 to 99 within a 24 hour period	Trouble Call Limit = 0 for unlimited Central Station trouble calls
Annunciator Lock Enable	Y	Refer to “Lock Enable Option” on page 95. • Enabled Yes • Enabled No	Enabled Yes
Remote Download	Y	Refer to “FS-Tools Upload/Download” on page 119. • Remote Download - Proprietary No • Remote Download - Proprietary Yes	Remote Download *Proprietary Yes* for Proprietary system intended to protect only contiguous properties

3.1 User Programming

The ES-1000X is completely field programmable and requires no special software skills. *While programming the ES-1000X, the fire protection capabilities of the control panel are enabled.*

Site-specific programming may be accomplished in any of the following ways:

- **Autoprogramming Feature** - This is a convenient method for quickly bringing the FACP addressable SLC devices on-line without the necessity of programming each device individually. Refer to "Autoprogram" on page 49 for a detailed description of Autoprogramming.
- Manual programming or editing using the FACP keypad
- Remote Programming and Editing Feature - allows creation and editing of site-specific custom programs using a Windows-based computer and modem. For programs requiring a large amount of data entry, this method may be preferred. The FS-Tools programming utility can be downloaded from www.firelite.com for this purpose.
- Local Programming and Editing Feature - allows creation and editing of site-specific custom programs using a Windows-based computer and the FACP USB connection. For programs requiring a large amount of data entry, this method may be preferred. The FS-Tools programming utility can be downloaded from www.firelite.com for this purpose.

3.2 Programming Screens Description

The options available when the *Enter* key is pressed are: Read Status Mode and Login. The Read Status and Login options have multiple functions or features which may be chosen. To view all of the choices, it is necessary that the programmer scroll through a number of additional *subscreens*. These selections are displayed on multiple screens to make them more readable for the programmer. Refer to "Master Programming Level" on page 48, for additional information on the various screens.

The title of the main option screen will always be displayed at the top of the subscreens for the programmer's convenience. If additional subscreens exist, an Up or Down arrow will be displayed in the upper right corner of the screen being viewed. The programmer can then press the keypad Up or Down arrow key to view the new subscreen. To select one of the choices in a screen, the programmer presses the keypad numerical key corresponding to the desired choice.

Note that subscreens may also have multiple options which require viewing more than one screen. The same process, as detailed in the previous paragraphs, is followed to view all option choices.

The programmer can exit any mode by repeatedly pressing the keypad *ESC* (Escape) key until the display reads System Normal. *Note that the data which is entered during Programming mode is not saved until the programmer exits this mode by repeatedly pressing the 'ESC' key. If the Reset key is pressed or power is lost before exiting Programming mode, all data just entered will be lost.*

NOTE: Some programming screen will show a selection with the option of *Not Used* followed by a number of asterisks. The option of Not Used is a visual indicator that more screens are available by pressing the down arrow. The number of asterisks shown will vary. This is not a programming error, but a visual indicator when scrolling through screens.

3.3 Initial Power-up

The following sections describe the initial programming procedures for a new system. The same procedures are used to modify programming in an existing system.

After completing the wiring of addressable devices to the SLC, apply power to the control panel. Since the addressable devices have not yet been programmed into the FACP, their LEDs will not flash, and the following trouble message will be displayed.

```
 TROUBL IN SYSTEM
PASSWORD FAULT

 08:52A 121822
```

3.4 Users and Passwords

After initial power-up, the ES-1000X requires a password change and user account setup before programming. After pressing *Enter*, and *2* for panel login, a screen will prompt for the type of access account, Administrator or User. An administrator has the ability to modify user accounts and view the cybersecurity log. The User account has access to panel programming. Under the user account there are two programming levels:

- User Master Program Level is used for programming panel specific data relating to device types, zoning, messages, control panel functions, etc.
- User Maintenance Program Level is used by a qualified operator to access features such as Disable/Enable, View and Clear History, Walktest and System Time Change.

Using the Administrator login, the default password must be changed to a new, unique password. Refer to the section below. There is a maximum of two administrator logins available. After the administrator account is set up, User account(s) must be created. Only a User account has the ability to program the control panel. There is a maximum of ten (10) User accounts available.

3.4.1 Administrator Role

Password Change-Administrator

The factory set password must be changed to clear the Password Fault from the panel. Pressing the *Enter* key on home screen will cause the following screen to be displayed:

```
     MAIN MENU
1=READ STATUS MODE
2=LOGIN
```

Press *2* to login to the panel. The following screen will appear.

```
   SELECT ACCOUNT
1=ADMINISTRATORS
2=USERS
3=NOT USED     *
```

Select *1* for Administrators.

```
   SELECT ADMIN
1=ADMIN 1
2=ADMIN 2
```

Select *1* for Administrator 1.

```
LOGIN FOR ADMIN 1
ENTER PASSWORD
********
```

Enter the default eight-digit password, *00000000*. *Note that the passwords will not be displayed on LCD annunciators*.

The following screen will appear when the password is entered:

```
ADMIN 1 ACCOUNT
1=MODIFY ACCOUNTS
2=VIEW CYBER SEC LOG
3=NOT USED   **
```

Enter Password Screen

Select *1* to modify an account.

```
MODIFY ACCOUNTS
1=ADMINISTRATORS
2=USERS
3=NOT USED
```

Select *1* to modify an Administrator account.

```
   MODIFY ADMIN
1=ADMIN 1      ENABLED
2=ADMIN 2    DISABLED
```

Select *1* to modify the Administrator 1 account.

```
   MODIFY ADMIN 1
1=ENABLED          NO
2=NOT USED
3=PASSWORD
```

Press 3 to change the default password. The default password, *00000000*, must be changed to clear the Password Fault from the panel.

```
   MODIFY ADMIN 1
  ENTER PASSWORDS
ADMIN 1: ********
   NEW: ********
```

A flashing cursor will appear in the center of the display. Enter the default password, *00000000*. Then, enter a new, valid eight digit password in the second line. Once the last digit is entered, the following screen will be displayed:

```
MODIFY ADMIN 1
VERIFY PASSWORD

NEW: ********
```

Re-enter the new password to verify the change. A message will appear showing the password has been successfully changed. The administrator may then set up a second admin account following the last four steps for Admin 2.

Password Change- User

Once the default password has been change, the administrator must create a user in the account for system programming.Pressing the *Enter* key on home screen will cause the following screen to be displayed:

```
MAIN MENU
1=READ STATUS MODE
2=LOGIN
```

Press *2* to login to the panel. The following screen will appear.

```
SELECT ACCOUNT
1=ADMINISTRATORS
2=USERS
3=NOT USED     *
```

Select *1* for Administrators.

```
SELECT ADMIN
1=ADMIN 1
2=ADMIN 2
```

Select *1* for Administrator 1.

```
LOGIN FOR ADMIN 1
ENTER PASSWORD
********
```

Enter the eight-digit password. *Note that the passwords will not be displayed on LCD annunciators*.

The following screen will appear when the password is entered:

```
ADMIN 1 ACCOUNT
1=MODIFY ACCOUNTS
2=VIEW CYBER SEC LOG
3=NOT USED
```

Select *1* to modify an account.

```
MODIFY ACCOUNTS
1=ADMINISTRATORS
2=USERS
3=NOT USED
```

Select *2* to modify a User account.

```
MODIFY USER
1=USER 1
2=USER 2
3=USER 3
```

Select the desired User account. There are ten User accounts available, where “X” represents the user account chosen.

```
MODIFY USER X
1=ENABLED        NO
2=ROLE       MASTER
3=PASSWORD
```

Select *1* to enable the User account. Each press of the *1* key will toggle the screen between Enabled *Yes* and Enabled *No*. Press 3 to assign a password. *Note that if a user is disabled at any time, the password will need to be reassigned.*

```
   MODIFY USER X
  ENTER PASSWORDS
ADMIN X: ********
    NEW: ********
```

A flashing cursor will appear in the center of the display. The administrator must re-enter their password. Then, enter the new 8-digit password for the User account. When the last digit is entered, the following screen will be displayed:

```
   MODIFY USER X
  VERIFY PASSWORD

    NEW: ********
```

Re-enter the new User password to verify the change. A message will appear showing the password has been successfully changed.

■ Invalid Password

If a password is entered incorrectly or is not a valid password, the panel will display either of the following messages.

```
MODIFY ______ X
_____ X PASSWORD
  IS INCORRECT
PRESS ENTER OR ESC
```

```
   MODIFY ______ X
NEW PASSWORD CANNOT
BE ALL THE SAME CHAR
 PRESS ENTER OR ESC
```

The programmer may hit the *Escape* or *Enter* key and re-enter the password correctly.

■ Incorrect Password/Timeout

An administrator has two attempts to enter the correct password. If the password is incorrect after the two attempts, the administrator must wait 60 seconds for another attempt. However, if the password has been forgotten, record the 20-character code and contact Fire•Lite Technical Services. After proper authentication, the password will be supplied to the administrator.

```
  INVALID PASSWORD

********************
 PRESS ENTER OR ESC
```

Assign Role

The Administrator has permissions to assign the programming roles of the User accounts. The Master Program Level is used for programming panel specific data relating to device types, zoning, messages, control panel functions, etc. The Maintenance Program Level is used by a qualified operator to access features such as Disable/Enable, View and Clear History, Walktest and System Time Change.

To assign roles to specific users, press the *Enter* key on the home screen. The following screen will display:

```
     MAIN MENU
1=READ STATUS MODE
2=LOGIN
```

Press *2* to login to the panel. The following screen will appear.

```
   SELECT ACCOUNT
1=ADMINISTRATORS
2=USERS
3=NOT USED    *
```

Select *1* for Administrators.

```
   SELECT ADMIN
1=ADMIN 1
2=ADMIN 2
```

Select the appropriate administrator. .

```
LOGIN FOR ADMIN X
ENTER PASSWORD
********
```

Enter the eight-digit password. *Note that the passwords will not be displayed on LCD annunciators*.

The following screen will appear when the password is entered:

```
ADMIN X ACCOUNT
1=MODIFY ACCOUNTS
2=VIEW CYBER SEC LOG
3=NOT USED
```

Select *1* to modify an account.

```
MODIFY ACCOUNTS
1=ADMINISTRATORS
2=USERS
3=NOT USED
```

Select *2* to modify a User account.

```
   MODIFY USER
1=USER 1          ⇩
2=USER 2
3=USER 3
```

Select the desired User account. There are ten User accounts available.

```
   MODIFY USER X
1=ENABLED        NO
2=ROLE        MASTER
3=PASSWORD
```

Select *2* to modify the User's role.

```
   MODIFY USER X
  ENTER NEW ROLE
1=MASTER
2=MAINTENANCE
```

Press *1* to select Master level for programming panel specific data relating to device types, zoning, messages, control panel functions, etc. Press *2* to select Maintenance level for access to features such as Disable/Enable, View and Clear History, Walktest, and System Time Change.

3.4.2 User Role

There are two programming levels which will access the Programming screens as indicated in the following sections. From either of the screens, access to specific system and device features or programming may be obtained. All user programming entries are stored in nonvolatile memory. The Master Program Level is used for programming panel specific data relating to device types, zoning, messages, control panel functions, etc. The Maintenance Program Level is used by a qualified operator to access features such as Disable/Enable, View and Clear History, Walktest and System Time Change. A user has the ability to change their administrator-assigned password. Refer to Section 3.5.9 on page 95 for instructions.

3.5 Master Programming Level

When the Master Program Level password is entered, the control panel can enter user Programming mode. In this mode, the piezo sounder remains off, the trouble relay is activated and the system Trouble LED flashes until Programming mode is exited. An Administrative user must have enabled the User in password setup and granted the User access to programming at the Master level. To access user programming mode at the master level, press the *Enter* key. The LCD will display the following.

```
      MAIN MENU
1=READ STATUS MODE
2=LOGIN
```

Select *2* to login to the panel.

```
   SELECT ACCOUNT
1=ADMINISTRATORS
2=USERS
3=NOT USED
```

Select *2* to login as a User.

```
    SELECT USER
1=USER 1          ⇩
2=USER 2
3=USER 3
```

Select the appropriate User login ID:

```
LOGIN FOR USER X
ENTER PASSWORD
********
```

Enter the User's ***Master*** level password. Only a user with master level programming rights can access panel programming. The following screen will appear:

```
   MASTER MENU
1=PROGRAMMING MODE ⇩
2=FS-TOOL UP/DWNLOAD
3=USB UP/DOWNLOAD
```

Select *1* to access panel programming mode.

```
   PROGRAMMING
1=AUTOPROGRAM ⇩
2=POINT SETUP
3=ZONE SETUP
```

Programming Screen #1

Pressing the down arrow will display more programming options:

```
   PROGRAMMING
1=LOOP SETUP ⇕
2=SYSTEM SETUP
3=NOT USED     *****
```

Programming Screen #2

```
   PROGRAMMING
1=HISTORY ⇕
2=COMMUNICATOR
3=ANNUNCIATORS
```

Programming Screen #3

```
   PROGRAMMING
1=PASSWORD CHANGE ⇧
2=CLEAR PROGRAM
3=PROGRAM CHECK
```

Programming Screen #4

3.5.1 Autoprogram

```
   PROGRAMMING
1=AUTOPROGRAM
2=POINT PROGRAM
3=ZONE SETUP
```

Programming Screen #1

Pressing *1* while viewing Programming Screen #1, will select the Autoprogram option, which prompts the control panel to poll all devices installed on the SLC loop(s). The primary purpose of autoprogramming is to allow the installer a fast and easy way to bring the system on-line as quickly as possible. The first time the system is powered-up, it should be autoprogrammed.

If the system is already programmed and Autoprogram is initiated, the system will only add default values for newly installed devices.

When Autoprogram is selected, the control panel will begin autoprogramming the system by communicating with each addressable device installed on the SLC loop. While autoprogramming, the panel will display the following:

```
   AUTOPROGRAM
AUTOPROGRAMMING!
  PLEASE WAIT
```

Autoprogram Progress Screen

When Autoprogramming is completed, the control panel will display the type and quantity of each device installed on the SLC loop(s) similar to the following display:

```
# OF DET LOOP1 055
# OF MON LOOP1 035
# OF CON LOOP1 030
```

Autoprogram Result Screen #1

In the preceding example, the display indicates that this SLC Loop has 55 addressable detectors, 35 monitor modules and 30 control modules installed.

Pressing the *ESC* key will return the display to Programming Screen #1.

3.5.2 Point Program

```
  PROGRAMMING
1=AUTOPROGRAM
2=POINT PROGRAM
3=ZONE SETUP
```

Programming Screen #1

The Point Program option allows the programmer to add a new addressable device to an SLC loop, delete an existing device from the loop or change the programming for an existing device. Pressing *2*, while viewing Programming Screen #1, will select the Point Program option and display the following screen:

```
POINT PROGRAM. LOOP:
1=LOOP 1
2=LOOP 2
3=LOOP 3
```

Point Program Screen

Loop Select

Press the corresponding number to program the desired loop. The ES-1000 comes standard with one loop. Additional SLC-3LS modules are required to expand the system to three SLC loops.

```
  POINT PROGRAM
1=DETECTOR
2=MODULE
```

Programming Screen #1

Detector Programming

Pressing *1*, while viewing the Point Program Screen, will allow the programmer to add, delete or change the programming of an addressable detector. The following screen will be displayed by the control panel:

```
     DETECTOR
1=ADD
2=DELETE
3=EDIT
```

Detector Screen

■ Add Detector

Pressing *1* while viewing the Detector Screen will display the following screen which allows the programmer to add a new detector address to programming:

```
   ADD DETECTOR
ENTER DETECTOR#
***
```

Add Detector Screen

A flashing cursor will appear in the position of the first asterisk to the left. The programmer keys in the three digit detector address, such as 005. The screen will then ask whether the detector being added is wireless.

```
   ADD DETECTOR
1=DETECTOR
2=DETECTOR: WIRELESS
```

Add Detector Screen

Select *1* for wired detector or *2* for wireless detector. When the choice is selected, the following screen will be displayed:

```
   DETECTOR TYPE
1=SMOKE(PHOTO)
2=USER-DEFINED-1
3=SMOKE(ION)
```

through

```
   DETECTOR TYPE
1=USER-DEFINED-14
2=DET_HIGH_HEAT
3=USED-DEFINED-15
```

Press the down arrow key to view additional choices. Press the number corresponding to the desired selection to program that type to the newly added detector. If the selected detector is a multi-criteria Fire/CO detector, select *1* for *Fire CO*. When the type has been selected, the following screen will be displayed:

```
   ADD DETECTOR
DETECTOR#      005
IS ADDED
```

NOTE: The system *must* be monitored by a Supervising Station when using carbon monoxide detection per The Requirements for the Installation of Carbon Monoxide (CO) Detection and Warning Equipment, NFPA 720.

The programmer can continue adding detectors by pressing the *ESC* key which will return the display to the Add Detector Screen.

■ Delete Detector

```
  DETECTOR
1=ADD
2=DELETE
3=EDIT
```

Detector Screen

Pressing *2* in the Detector Screen will display the Delete Detector Screen which allows the programmer to delete a specific detector:

```
 DELETE DETECTOR
ENTER DETECTOR#
***
```

Delete Detector Screen

A flashing cursor will appear in the position of the first asterisk to the left. The programmer keys in the three digit detector address, such as 005. When the last digit is keyed-in, the following screen will be displayed:

```
 DELETE DETECTOR
DETECTOR#      005
IS DELETED
```

The programmer can continue deleting detectors by pressing the *ESC* key which will return the display to the Delete Detector Screen.

■ Edit Detector

The programmer can change a detectors existing or factory default programming by pressing *3* in the Detector Screen. The following screen will be displayed:

```
 EDIT DETECTOR
ENTER POINT ADDRESS
***
```

Edit Detector Screen

A flashing cursor will appear in the position of the first asterisk to the left. The programmer keys in the three digit detector address, such as 017.

When the last digit is keyed-in, if the selected address has not been added to programming, a screen showing information about a device that is installed with a lower address, closest to the selected address, will be displayed.

If no detectors have been installed on the loop, the following will be displayed:

```
     NO DETECTOR
      INSTALLED
```

Edit Detector Screen #1

If the selected address has been added to programming, device summary screens will be displayed. These screens allow the programmer to view all device settings at a single glance. Pressing the left or right arrow keys will allow the programmer to rapidly view the devices at the previous or next address (if installed).

If a detector (such as a photoelectric detector) with the selected address is not physically installed on the SLC or has a communication fault but the address is programmed in the system, the following screen will be displayed:

```
TROUBL SMOKE(PHOTO)
<ADJ><NOUN>
            ZNNN
        *   1D017
```

Edit Detector Screen #1

If the selected address has been added to programming and a detector (such as a photoelectric detector) with the selected address is physically installed on the SLC and is communicating with the control panel, the following will be displayed:

```
NORMAL SMOKE (PHOTO)
<ADJ><NOUN>
            ZNNN
       *V *  1D017
```

Edit Detector Screen #1

To change the programming for the displayed detector, press the keypad ‘down’ arrow key to view the Edit Detector screens.

In the preceding example:

- ✓ Normal - indicates that the detector with the selected address is physically installed on the SLC and communicating with the control panel (enabled)
- ✓ <ADJ><NOUN> - represents the adjective and noun, which have been programmed, describing the location of the displayed device

- ✓ ZNNN - represents the first of five possible software zones that the detector is assigned to (NNN = the three digit zone number from 000 - 0255)
- ✓ V or * - indicates whether or not alarm verification is enabled (V = alarm verification enabled and * = alarm verification disabled)
- ✓ W or * - indicates whether or not walktest is enabled (W = walktest enabled and * = walktest disabled)
- ✓ X or * - indicates whether or not the detector is wireless (X = wireless detector and * = wired detector)
- ✓ 1D017 - represents the Loop, Device type and Device address (1=SLC Loop, D=Detector and 017=Detector Address 017)

The following examples show the editing of a photoelectric smoke detector with address 017, located on the SLC loop:

```
EDIT DETECTOR 1D017
  ENABLED        YES
2=TYPE SMOKE(PHOTO)
3=VERIFICATION  OFF
```

Edit Detector Screen #2

```
EDIT DETECTOR 1D017
1=WALKTEST       YES
2=PAS            YES
3=PRE-SIGNAL     YES
```

Edit Detector Screen #3

```
EDIT DETECTOR 1D017
1=ZONE ASSIGNMENT
  000 ***********
```

Edit Detector Screen #4

```
EDIT DETECTOR 1D017
  WIRELESS        NO
2=SOUNDER BASE
3=NOT USED      **
```

Edit Detector Screen #5

```
EDIT DETECTOR 1D017
1=ADJECTIVE/NOUN
2=DESCRIPTION
****************
```

Edit Detector Screen #6

Enabled/Disabled Detector

```
  EDIT DETECTOR
  ENABLED        YES
2=TYPE
3=VERIFICATION
```

Edit Detector Screen #2

The system will show whether the detector is enabled or disabled. To change the status of the detector, the programmer must enter system programming using a Maintenance password.

Type

```
  EDIT DETECTOR
  ENABLED        YES
2=TYPE
3=VERIFICATION
```

Edit Detector Screen #2

To select the type of detector being programmed, press the *2* key while viewing the Edit Detector Screen #2. This will cause the control panel to display the following Detector Type Screens:

```
   DETECTOR TYPE
1=SMOKE(PHOTO)
2=USER-DEFINED-1
3=SMOKE(ION)
```

through

```
   DETECTOR TYPE
1=USER-DEFINED-14
2=DET HIGH HEAT
3=USER-DEFINED-15
```

Pressing the down arrow key will display additional detector types as indicated in the following table.

Detector Type	Action When Activated
Smoke Photo	Fire Alarm
User-Defined-1	same as previous (Smoke Photo)
Smoke (Ion)	Fire Alarm
User-Defined-2	same as previous (Smoke Ion)
Heat	Fire Alarm
User-Defined-3	same as previous (Heat Detect)
Smoke Duct-P	Fire Alarm
User-Defined-4	same as previous (Smoke DuctP)
Photo w/Heat	Fire Alarm
User-Defined-5	same as previous (Photo w/Heat)
CO Only	CO Alarm
User-Defined-6	same as previous (CO Alarm)
Duct Superv	Supervisory, latching
User-Defined-7	same as previous (Superv DuctP)
Photo Super AR	Supervisory, nonlatching (works only in LiteSpeed)
User-Defined-8	same as previous (Photo-SupervAR)
CO Supervisory	Supervisory, latching
User-Defined-9	same as previous (CO Supervisory)
ADAPT	Fire Alarm
User-Defined-10	same as previous (ADAPT)
Beam	Fire Alarm
User-Defined-11	same as previous (Beam)

Fire/CO	response is programmable (Alarm, Supv, or None)
User-Defined-12	same as previous (Fire/CO)
Photo/CO	response is programmable (Alarm, Supv, or None)
User-Defined-13	same as previous (Photo/CO)
Photo Supervisory	Supervisory, latching
User-Defined-14	same as previous (Photo Supervisory)
Det High Heat	Fire Alarm
User-Defined-15	same as previous (Det High Heat)

While viewing either Detector Type screen, select the type of detector being programmed by pressing the corresponding keypad number key. The display will return to Edit Detector Screen #2 and indicate the selection next to the Type option.

NOTE: If a detector is selected to be a DUCT SUPERV type, it will function like a supervisory point not a fire alarm point. The supervisory LED and supervisory relay will activate, not the fire alarm LED or alarm relay, if the detector senses smoke.

If the selected detector is a multi-criteria Fire/CO or Photo/CO detector, select *1* for *Fire CO* or *Photo/CO* on the last screen and the following will display:

```
 DETECTOR RESPONSE
1=CO            ALARM
2=HEAT          ALARM
3=PHOTO         ALARM
```

In this screen, select the action performed by the detector when it is activated. Press *1* to change the response for the *Photo* element of the detector, *2* for the *Heat* element, and *3* for the *CO* element. The detector response will toggle between *Alarm* (sends an Alarm signal to the FACP), *Supervisory* (sends a Supervisory signal to the FACP, and *None* (no signal sent to the FACP).

Verification

Alarm verification is used to confirm that a smoke detector activation is a true alarm condition and not a false alarm. This feature is selected by pressing *3* while viewing the Edit Detector Screen #2 so that the display reads *Verification On*. Each time the *3* key is pressed, the display will toggle between *Verification On* and *Verification Off*. For a detailed description, refer to “Alarm Verification (None or One Minute)” on page 109.

Walktest

```
 EDIT DETECTOR
1=WALKTEST
2=PAS
3=PRE-SIGNAL
```

Edit Detector Screen #3

The Walktest feature allows one person to test the system devices without the necessity of manually resetting the control panel after each device activation. To enable a device for the Walktest feature, press *1* while viewing the Edit Detector Screen #3 until the display reads *Walktest Yes*. Each press of the *1* key will cause the display to toggle between *Walktest Yes* and *Walktest No*. Refer to “Walktest” on page 109.

PAS

The PAS (Positive Alarm Sequence) option will program an automatic, addressable detector to delay panel activation (including alarm relay and communicator) for a period of 15 seconds plus a programmable time of up to 3 minutes. Zone 253, however, will activate immediately and may be used to connect a signaling device to indicate PAS activation *(do not use a Notification Appliance Circuit for this purpose)*. To enable the PAS feature, press *2* while viewing the Edit Detector Screen #3 until the display reads *PAS Yes*. Each press of the *2* key will cause the display to toggle between *PAS Yes* and *PAS No*. Refer to “Positive Alarm Sequence” on page 108.

For example, if a detector with address 005 is to be configured for PAS operation:

- ✓ Select *PAS Yes* when editing the detector set to address 005
- ✓ Program the desired zone or zones to be activated by this detector, in this example Z001
- ✓ Program an output, such as a control module that is to be activated by detector 005 by assigning the same zone to it; in this example Z001
- ✓ Program an output, such as a control module, for PAS activation by assigning zone Z253 to it. This control module may be connected to a signaling device used to indicate a PAS condition *(do not use a Notification Appliance Circuit for this purpose)*
- ✓ Enable zones Z001 and Special Purpose Zone PAS 253 and set the PAS delay timer to some value

With the preceding program settings, when the detector with address 005 is activated, zone Z253 will cause its associated control module to activate immediately, sounding the connected PAS signaling device. Following the PAS delay time, zone Z001 will cause its associated control module to activate and the control panel will initiate an alarm condition.

Note that a detector can be enabled for either PAS or Pre-signal but not both.

Pre-signal

```
 EDIT DETECTOR
1=WALKTEST
2=PAS
3=PRE-SIGNAL
```

Edit Detector Screen #3

The Pre-signal option programs the detector to delay panel activation for a preprogrammed time delay of up to three minutes while allowing for visual verification by a person. Note that the alarm relay and communicator will respond to the initial alarm immediately. In addition, Zone 254 will activate. This zone can be programmed to a control module which may be used to activate a sounder or indicator which the installer designates as a Presignal indication *(do not use a Notification Appliance Circuit for this purpose)*. To enable the Pre-signal feature, press *3* while viewing Edit Detector Screen #3 until the display reads *Pre-signal Yes*. Each press of the *3* key will cause the display to toggle between *Pre-signal Yes* and *Pre-signal No*. Refer to “Pre-signal” on page 108 for Pre-signal operation.

For example, if a detector with address 005 is to be configured for Pre-Signal operation:

- ✓ Select *Pre-signal Yes* when editing the detector set to address 005
- ✓ Program the desired zone or zones to be activated by this detector, in this example Z001
- ✓ Program an output, such as a control module that is to be activated by detector 005 by assigning the same zone to it; in this example Z001
- ✓ Program an output, such as a control module, for Pre-signal activation by assigning zone Z254 to it. This control module may be connected to a signaling device used to indicate a Pre-signal condition *(do not use a Notification Appliance Circuit for this purpose)*
- ✓ Enable zones Z001 and Special Purpose Zone Pre-signal 254 and set the Pre-signal delay timer to some value

With the preceding program settings, when the detector with address 005 is activated, zone Z254 will cause its associated control module to activate immediately, sounding the connected signaling device to indicate the Pre-signal condition. Following the Pre-signal delay time, zone Z001 will cause its associated control module to activate and the control panel will initiate an alarm condition.

Note that a detector can be enabled for either PAS or Pre-signal but not both

Zone Assignment

```
EDIT DETECTOR
1=ZONE ASSIGNMENT
  000 *** *** *** ***
```

Edit Detector Screen #4

A maximum of five zones can be programmed to each addressable detector. Pressing *1* while viewing Edit Detector Screen #4 displays the following screen:

```
    ZONE ASSIGNMENT
Z000 *** *** *** ***
```

Zone Assignment Screen

Note that Z*** represents the Zone Number(s) corresponding to this device. The factory default for an unprogrammed device is Z000 for general alarm zone. A flashing cursor will appear on the first *0* to the right. Enter the three digit number corresponding to the zone that is to be assigned to this device. The cursor moves to the next Z*** designation. Continue entering zone assignments or the remaining zones can be left blank or programmed as general alarm zone Z000. When all desired changes have been made, press the Enter key to store the zone assignments. The display will return to the Edit Detector Screen #4. Note that the left and right arrow keys can be used to navigate through the zones and the *CLEAR* key can be used to quickly clear a zone.

If the selected detector is a multi-criteria detector, the following screen will display respective before the Zone Assignment Screen allowing the user to program the zones independently.

```
EDIT DETECTOR
1=PHOTO ZONES
2=HEAT ZONES
3=CO ZONES
```

Multi-Criteria Detector Zones Screen

Wireless

```
 EDIT DETECTOR
   WIRELESS       NO
2=SOUNDER BASE
3=NOT USED     ***
```

Edit Detector Screen #5

The Wireless selection will update automatically if the system recognizes a wireless device. A wireless device operates as part of the SWIFT wireless network. If the detector is wireless, the display reads *Wireless Yes*. If the device is wired, the display will read *Wireless No*. Fore more information on the SWIFT wireless network, *refer to the SWIFT manual*, #LS10036-000FL-E.

Sounder Base

```
 EDIT DETECTOR
WIRELESS       NO
2=SOUNDER BASE
```

Edit Detector Screen #5

The Sounder Base selection allows the programmer to enter different values if the selected detector is mounted in an addressable sounder base. Pressing *2* while viewing Edit Detector Screen #5 will display the following:

```
SOUNDER BASE
1=INSTALLED       NO
2=SILENCEABLE    YES
3=CODING       STEADY
```

Sounder Base Screen #1

```
SOUNDER BASE
1=ZONE ASSIGNMENT
*** *** *** *** ***
2=VOLUME         LOW
```

Sounder Base Screen #2

If the selected detector has been installed in a sounder base, press *1* while viewing Sounder Base Screen #1 until the display reads *Installed Yes*. Each press of the *1* key will cause the display to toggle between *Installed Yes* and *Installed No*.

The Silenceable selection allows the programmer to select whether the selected sounder base can be silenced, either by pressing the Alarm Silence key or by enabling Autosilence. Pressing the *2* key while viewing Sounder Base Screen #1 will enable the Silenceable feature causing the display to read *Silenceable Yes*. Repeated presses of the *2* key will cause the display to toggle between *Silenceable Yes* and *Silenceable No*. When set to Canadian mode of operation, a third silenceable option appears, Silenceable Auto. When set to *Silenceable Auto*, the intelligent sounder base will automatically silence after the Control Module Auto Silence timer expires.

The Coding feature allows the programmer to select the type of output that the sounder base will generate when activated. Pressing *3* while viewing Sounder Base Screen #1 will cause the following displays to appear:

```
    CODING
1=STEADY
2=TEMPORAL 3
3=TEMPORAL 4
```

Coding Screen

The programmer can select the sounder base output by pressing the number corresponding to the desired output. The coding selections are:

- Steady - a continuous output with no coding
- Temporal 3 - ½ second On, ½ second Off, ½ second On, ½ second Off, ½ second On, 1½ seconds Off
- Temporal 4 - 100 milliseconds On, 100ms Off, 100 ms On, 100ms Off, 100 ms On, 100ms Off, 100 ms On, 5 seconds Off

```
SOUNDER BASE
1=ZONE ASSIGNMENT
*** *** *** *** ***
2=VOLUME        LOW
```

Sounder Base Screen #2

The sounder base volume has two settings: Low or High. Press *1* while viewing Sounder Base Screen #2 until the display reads Low or High as desired. Each press of the *1* key will cause the display to toggle between *Volume Low* and *Volume High*.

A maximum of five zones can be programmed to each sounder base. Pressing *2* while viewing Sounder Base Screen #2 displays the following screen:

```
 ZONE ASSIGNMENT
Z*** *** *** *** ***
```

Zone Assignment Screen

Note that Z*** represents the Zone Number(s) corresponding to this device. The factory default for an unprogrammed device is Z000 for general alarm zone. A flashing cursor will appear on the first *0* to the left. Enter the three digit number corresponding to the zone that is to be assigned to this sounder base. The cursor moves to the next Z*** designation. Continue entering zone assignments or the remaining zones can be left blank or programmed as general alarm zone Z000. When all desired changes have been made, press the Enter key to store the zone assignments. The display will return to the Sounder Base Screen #2. Note that the left and right arrow keys can be used to navigate through the zones and the *CLEAR* key can be used to quickly clear a zone.

CAUTION: VERIFY SOUNDER BASE MODEL NUMBER

USE OF THE SOUNDER BASE PROGRAMMING OPTIONS REQUIRES THE USE OF THE **B200S** SOUNDER BASE. WHILE THE **B200SR** SOUNDER BASE IS COMPATIBLE, IT DOES NOT ALLOW FOR SPECIAL PROGRAMMING OPTIONS. IF USING THE B200SR, SET THE SOUNDER BASE OPTION TO “NO”. IF SET TO “YES”, AN ERROR WILL OCCUR AND THE SYSTEM WILL DISPLAY AN INVALID REPLY. CODING OPTIONS FOR THE B200SR ARE ACHIEVED MANUALLY WITH JUMPER SETTINGS ON THE DEVICE.

Adjective/Noun

```
 EDIT DETECTOR
1=ADJECTIVE/NOUN
2=DESCRIPTION
**************
```

Edit Detector Screen #6

The Adjective/Noun selection allows the programmer to enter specific descriptors about the detector currently being programmed. Pressing *1* while viewing Edit Detector Screen #6 will cause the following screen to be displayed:

```
1=STANDARD ADJECTIVE
2=STANDARD NOUN
3=CUSTOM ADJECTIVE
4=CUSTOM NOUN
```

Adjective/Noun Screen

```
1=STANDARD ADJECTIVE
2=STANDARD NOUN
3=CUSTOM ADJECTIVE
4=CUSTOM NOUN
```

Adjective/Noun Screen

Pressing *1* while viewing the Adjective/Noun Screen will cause the following screen(s) to be displayed. Note that the keypad *down* arrow key must be pressed to see all the Adjective screens. Press the number corresponding to the adjective that is to be used as a descriptor for the location of the detector currently being programmed. When an adjective has been selected, it will appear at the top of the display as indicated by the asterisks.

```
********************
1=NORTH
2=SOUTH
3=EAST
```

Adjective Screen #1

```
********************
1=WEST
2=FRONT
3=CENTER
```

Adjective Screen #2

```
********************
1=REAR
2=UPPER
3=LOWER
```

Adjective Screen #3

```
********************
1=MAIN
2=FIRST
3=2ND
```

Adjective Screen #4

```
********************
1=3RD
2=4TH
3=5TH
```

Adjective Screen #5

```
********************
1=FLOOR1
2=FLOOR2
3=FLOOR3
```

Adjective Screen #6

```
********************
1=FLOOR5
2=FLOOR6
3=ROOM
```

Adjective Screen #7

```
1=STANDARD ADJECTIVE
2=STANDARD NOUN
3=CUSTOM ADJECTIVE
4=CUSTOM NOUN
```

Adjective/Noun Screen

Pressing *2* while viewing the Adjective/Noun Screen will cause the following screen(s) to be displayed. Note that the keypad *down* arrow key must be pressed to see all the Noun screens. Press the number corresponding to the noun that is to be used as a descriptor for the location of the detector currently being programmed. When a noun has been selected, it will appear at the top of the display as indicated by the asterisks.

```
********************
1=BASEMENT
2=BOILER RM
3=CLASSROOM
```

Noun Screen #1

```
********************
1=CLOSET
2=CORRIDOR
3=ELECTRIC RM
```

Noun Screen #2

```
********************
1=ELEVATOR
2=ENTRANCE
3=FLOOR
```

Noun Screen #3

```
********************
1=GARAGE
2=HALLWAY
3=HVAC RM
```

Noun Screen #4

```
********************
1=KITCHEN
2=LOBBY
3=OFFICE
```

Noun Screen #5

```
********************
1=PATIENT
2=RESTROOM
3=ROOM
```

Noun Screen #6

```
********************
1=STAIRWAY
2=STOREROOM
3=WING
```

Noun Screen #7

```
********************
1=ZONE
```

Noun Screen #8

```
1=STANDARD ADJECTIVE
2=STANDARD NOUN
3=CUSTOM ADJECTIVE
4=CUSTOM NOUN
```

Adjective/Noun Screen

Pressing *3* or *4* while viewing the Adjective/Noun Screen will display screens similar to the previous Adjective and Noun Screens. The new screens will list custom Adjectives and Nouns which have been programmed into the control panel using the FS-Tools utility. These descriptors are selected as described in the previous sections.

Description

```
  EDIT DETECTOR
1=ADJECTIVE/NOUN
2=DESCRIPTION
```

Edit Detector Screen #5

The Description selection allows the programmer to enter additional information about the detector currently being programmed. This information will be displayed as part of the device label on the display. Pressing *2* while viewing Edit Detector Screen #5 will cause the following screen to be displayed:

```
DESCRIPTION    1D002
ADJECTIVE/NOUN

********************
```

Adjective/Noun Screen

A flashing cursor will appear at the first asterisk to the left. The programmer can enter additional descriptive information about the device being programmed. This information will appear on the display along with the standard device label information.

A maximum of 20 characters (including spaces) can be entered. To enter alphanumeric characters from the keypad, repeatedly press the appropriate key until the desired character is displayed in the first position. For example, to enter the letter *B*, press the *2* (ABC) key three times to toggle through the characters *2*, *A* and *B*. Press the right arrow key to move the cursor one position to the right and repeat the process to enter the next character. To enter a space, press the * *(QZ)* key four times until a blank appears in the desired position. When all characters have been entered, press the Enter key to store the information. The display will return to the Edit Detector Screen #5, displaying the new information at the bottom of the screen.

Module Programming

```
   POINT PROGRAM
1=DETECTOR
2=MODULE
```

Point Program Screen #2

Pressing *2*, while viewing Point Program Screen #2, will allow the programmer to add, delete or change the programming of an addressable module. The following screen will be displayed by the control panel:

```
      MODULES
1=ADD
2=DELETE
3=EDIT
```

Modules Screen

■ Add Module

Pressing *1* while viewing the Modules Screen will display the following screen which allows the programmer to add a new module address to programming:

```
     ADD MODULE
ENTER MODULE#
***
```

Add Module Screen #1

A flashing cursor will appear in the position of the first asterisk to the left. The programmer keys in the three digit module address, such as *005*.

When the last digit is keyed-in, the following screen will be displayed:

```
    ADD MODULE
1=CON          3=MON
2=CON:WL-      4=MON:WL
      RELAY
```

Add Module Screen #2

Pressing *1* for Control Module, *2* for Wireless Relay Control Module, *3* for Monitor Module, or *4* for Wireless Monitor Module will cause the following screen to be displayed:

```
    ADD MODULE
MODULE#        005
IS ADDED (WIRELESS)
```

Add Module Screen #3

The programmer can continue adding modules by pressing the *ESC* or left arrow key which will return the display to the Add Module Screen #1.

■ Delete Module

```
   MODULES
1=ADD
2=DELETE
3=EDIT
```

Modules Screen

Pressing *2* in the Modules Screen will display the Delete Module Screen which allows the programmer to delete a specific module:

```
  DELETE MODULE
ENTER MODULE#
***
```

Delete Module Screen

A flashing cursor will appear in the position of the first asterisk to the left. Using the panel keypad, key in the module address such as *005*. When the last digit is keyed in, the following confirmation that the module has been deleted will be displayed:

```
  DELETE MODULE
MODULE#        005
IS DELETED
```

■ Edit Module Screen for Monitor Module

The programmer can change a modules existing or factory default programming by pressing *3* in the Modules Screen. The following screen will be displayed:

```
   EDIT MODULE
ENTER MODULE ADDRESS
***
```

Edit Module Screen

A flashing cursor will appear in the position of the first asterisk to the left. The programmer keys in the three digit module address, such as *012*. When the last digit is keyed-in, if the selected address has *not* been added to programming, a screen showing information about a device that <u>is</u> installed with a lower address, closest to the selected address, will be displayed. If no modules are installed on the loop, the following screen will be displayed:

```
    NO MODULE
    INSTALLED
```

Edit Module Screen

If the selected address has been added to programming but a module (such as a monitor module) with the selected address is not physically installed on the SLC or has a communication fault, the following screen will be displayed:

```
 TROUBL MONITOR
     <ADJ><NOUN>
            ZNNN
        * *  1M012
```

If the selected address has been added to programming and a module (such as a monitor module) with the selected address is physically installed on the SLC and is communicating with the control panel, the following screen will be displayed:

```
Normal MONITOR
      <ADJ><NOUN>
              ZNNN
         *  W 1M012
```

To change the programming for the displayed module, press the keypad down arrow key to view the following Edit Monitor screens. In the preceding example:

- ✓ Normal - indicates that the module with the selected address is physically installed on the SLC and communicating with the control panel (enabled)
- ✓ <ADJ><NOUN> - represents the adjective and noun, which have been programmed, describing the location of the displayed device
- ✓ ZNNN - represents the first of five possible software zones that the module is assigned to (NNN = the three digit zone number from 000 - 255)
- ✓ 1M012 - represents the Loop, Device type and Device address (1 = SLC Loop, M = Module and 012 = Module Address 012)
- ✓ W or * - indicates whether or not the device is programmed for Walktest (W = programmed for walktest, * = not programmed for walktest).
- ✓ X or * - indicates whether or not the device is wireless (X = wireless, * = wired).

If the selected address corresponds to a control module, a screen displaying information about the control module with the selected address will be displayed as shown in “Edit Module Screen for Control Modules” on page 61.

If the selected address corresponds to a monitor module, a screen displaying information about the module with the selected address will be displayed as illustrated in the following:

```
Normal MONITOR
      <ADJ><NOUN>
              ZNNN
         *  W  1M012
```

```
EDIT MONITOR  1M012
  ENABLED        YES
2=TYPE MONITOR
```

Edit Monitor Screen #2

```
EDIT MONITOR  1M012
1=PRE-SIGNAL     NO
  WIRELESS       NO
```

Edit Monitor Screen #3

```
EDIT MONITOR  1M012
1=WALKTEST      YES
2=ZONE ASSIGNMENT
000 *** *** *** ***
```

Edit Monitor Screen #4

```
EDIT MONITOR  1M012
1=ADJECTIVE/NOUN
2=DESCRIPTION
*******************
```

Edit Monitor Screen #5

Enabled/Disabled Module

```
  EDIT DETECTOR
  ENABLED        YES
2=TYPE
```

Edit Detector Screen #2

The system will show whether the module is enabled or disabled. To change the status of the module, the programmer must enter system programming using a Maintenance password.

Type Monitor

```
  EDIT MONITOR
1=ENABLED
2=TYPE    MONITOR
```

Edit Monitor Screen #2

Using the FS-Tools Upload/Download utility, unique user-defined monitor types can be created and loaded into the FACP for later use. The FACP response to the activation of a user-defined type is the same as most previous standard types in the list, thus allowing a variety of user-defined types and responses. To select the type of monitor module being programmed, press the *2* key while viewing the Edit Monitor Screen #2. This will cause the control panel to display the following Monitor Type Screens:

```
  MONITOR TYPE
1=PULL STATION
2=USER-DEFINED-1
3=WATERFLOW
```

Monitor Type Screen #1

Pressing the down arrow key will display additional Monitor Type screens. While viewing one of the Monitor Type screens, select the type of monitor module being programmed by pressing the corresponding keypad number key. The display will return to the Edit Monitor Screen #2 which will show the new type selection.

Table 3.1 lists the Monitor Types and their respective functions.

Monitor module type selection will affect the function of the point as follows:

Monitor Type	Action When Activated
Pull-Station	Fire Alarm
User-Defined-1	same as previous (Pull-Station)
Waterflow	Fire Alarm Delayed
User-Defined-2	same as previous (Waterflow)
Monitor	Fire Alarm
User-Defined-3	same as previous (Monitor)
Not Used ****	not used
Not Used *	not used
Smoke Conventional	Fire Alarm
User-Defined-5	same as previous (Smoke-Conventional)
Heat Conventional	Fire Alarm
User-Defined-6	same as previous (Heat-Detector)
Medic Alert [1]	General Purpose Signaling, latching
User-Defined-7	same as previous (Medic-Alert)
Hazard Alert [1]	General Purpose Signaling, latching
User-Defined-8	same as previous (Hazard-Alert)
Tornado Alert [1]	General Purpose Signaling, latching
User-Defined-9	same as previous (Tornado-Alert)
Phone	future use
User-Defined-10	same as previous (Phone)
Tamper	Supervisory, nonlatching (tracking)
User-Defined-11	same as previous (Tamper)
Supervisory	Supervisory, latching
User-Defined-12	same as previous (Supervisory)
Supervisory AR [2]	Supervisory, nonlatching (tracking)
User-Defined-13	same as previous (Supervisory-AR)
HVAC Ovrride [3]	Switch Supervisory, nonlatching (tracking)
Power Monitor	Power Fault
User-Defined-14	same as previous (Power Monitor)
Trouble Monitor	Trouble
User-Defined-15	same as previous (Trouble Monitor)
Process Monitor	General Purpose Signaling, latching
User-Defined-16 [1]	same as previous (Process-Monitor)
Process Monitor AR [1,2]	General Purpose Signaling, nonlatching (tracking)
User-Defined-17	same as previous (Process-Monitor-AR)
MNS Event	Allows the Mass Notification System to override FACP programming and turn off designated active outputs
Not Used ***	not used
Ack Switch	Acts like panel Acknowledge Key
Sil Switch	Acts like panel Silence Key
Reset Switch	Acts like panel Reset Key
Drill Switch	Acts like panel Drill Key
PAS Bypass	PAS Disable
HVAC Restart [3]	Switch (see note 2)
Drill Switch AR [2]	Acts like panel Drill Key, nonlatching (tracking)
Wireless Gateway	SWIFT gateway needs this type to display wireless troubles at the FACP

Table 3.1 Monitor Types

1 Combination systems employing these non-fire monitor types require the SLC loop to be programmed by the installer for Class B operation and isolator modules must be employed on each non-fire branch of the SLC as per Figure 13 in the SLC Wiring Manual (document number LS10201-000FL-E). Fire and non-fire devices must not be used on the same SLC branch. For UL2017 compliance, The ANN-LED annunciator must be used to indicate the active, dedicated zone or device

2 For entries ending in AR, AR refers to AutoResettable.

3 For HVAC Restart and HVAC Ovrride descriptions, refer to “Monitor Module Operation” on page 144.

```
EDIT MONITOR
1=PRE-SIGNAL      NO
  WIRELESS        NO
```

Edit Monitor Screen #3

Pre-signal

To enable the Pre-signal feature, press *1* while viewing Edit Monitor Screen #3 until the display reads *Pre-signal Yes*. Each press of the *1* key will cause the display to toggle between *Pre-signal Yes* and *Pre-signal No*. Refer to“Pre-signal” on page 108 for additional information.

Wireless

```
EDIT MONITOR
1=PRE-SIGNAL      NO
  WIRELESS        NO
```

Edit Monitor Screen #3

The Wireless selection will update automatically if the system recognizes a wireless device. If the module is wireless, the display reads *Wireless Yes*. If the module is wired, the display will read *Wireless No*. Fore more information on the SWIFT wireless network, *refer to the SWIFT manual*, #LS10036-000FL-E.

Walktest

```
EDIT MONITOR
1=WALKTEST
2=ZONE ASSIGNMENT
 000 *** *** *** ***
```

Edit Monitor Screen #4

The Walktest feature allows one person to test the system devices without the necessity of manually resetting the control panel after each device activation. To enable devices, which are connected to a monitor module, for the Walktest feature, press *1* while viewing the Edit Monitor Screen #4 until the display reads *Walktest Yes*. Each press of the *1* key will cause the display to toggle between *Walktest Yes* and *Walktest No*. Refer to “Walktest” on page 109 for additional information.

Zone Assignment

A maximum of five zones can be programmed to each addressable monitor module. Pressing *2* while viewing Edit Monitor Screen #4 displays the following screen:

```
  ZONE ASSIGNMENT
Z000  *** *** *** ***
```

Zone Assignment Screen

Note that Z*** represents the Zone Number(s) corresponding to this device. The factory default for an unprogrammed device is Z000 for general alarm zone. A flashing cursor will appear on the first *0* to the left. Enter the two digit number corresponding to the zone that is to be assigned to this device. The cursor moves to the next Z*** designation. Continue entering zone assignments or the remaining zones can be left blank or programmed as general alarm zones Z000. When all desired changes have been made, press the Enter key to store the zone assignments. The display will return to the Edit Monitor Screen #4.

Adjective/Noun

```
EDIT MONITOR
1=ADJECTIVE/NOUN
2=DESCRIPTION
****************
```

Edit Monitor Screen #5

The Adjective/Noun selection allows the programmer to enter specific descriptors about the monitor module currently being programmed. Pressing *1* while viewing Edit Monitor Screen #5 will cause the following screen to be displayed:

```
1=STANDARD ADJECTIVE
2=STANDARD NOUN
3=CUSTOM ADJECTIVE
4=CUSTOM NOUN
```

Adjective/Noun Screen

```
1=STANDARD ADJECTIVE
2=STANDARD NOUN
3=CUSTOM ADJECTIVE
4=CUSTOM NOUN
```

Adjective/Noun Screen

Pressing *1* while viewing the Adjective/Noun Screen will cause the following screen(s) to be displayed. Note that the keypad *down* arrow key must be pressed to see all the Adjective screens. Press the number corresponding to the adjective that is to be used as a descriptor for the location of the monitor module currently being programmed.

```
********************
1=NORTH
2=SOUTH
3=EAST
```

Adjective Screen #1

```
********************
1=WEST
2=FRONT
3=CENTER
```

Adjective Screen #2

```
********************
1=REAR
2=UPPER
3=LOWER
```

Adjective Screen #3

```
********************
1=MAIN
2=FIRST
3=2ND
```

Adjective Screen #4

```
********************
1=3RD
2=4TH
3=5TH
```

Adjective Screen #5

```
********************
1=FLOOR 1
2=FLOOR 2
3=FLOOR 3
```

Adjective Screen #6

```
********************
1=FLOOR 4
2=FLOOR 5
3=ROOM
```

Adjective Screen #7

```
1=STANDARD ADJECTIVE
2=STANDARD NOUN
3=CUSTOM ADJECTIVE
4=CUSTOM NOUN
```

Adjective/Noun Screen

Pressing *2* while viewing the Adjective/Noun Screen will cause the following screen(s) to be displayed. Note that the keypad *down* arrow key must be pressed to see all the Noun screens. Press the number corresponding to the noun that is to be used as a descriptor for the location of the monitor module currently being programmed.

```
********************
1=BASEMENT
2=BOILER RM
3=CLASSROOM
```

Noun Screen #1

```
********************
1=CLOSET
2=CORRIDOR
3=ELECTRIC RM
```

Noun Screen #2

```
********************
1=ELEVATOR
2=ENTRANCE
3=FLOOR
```

Noun Screen #3

```
********************
1=GARAGE
2=HALLWAY
3=HVAC RM
```

Noun Screen #4

```
********************
1=KITCHEN
2=LOBBY
3=OFFICE
```

Noun Screen #5

```
********************
1=PATIENT
2=RESTROOM
3=ROOM
```

Noun Screen #6

```
********************
1=STAIRWAY
2=STOREROOM
3=WING
```

Noun Screen #7

```
********************
1=ZONE
```

Noun Screen #8

Pressing *3* or *4* while viewing the Adjective/Noun Screen will display screens similar to the previous Adjective and Noun Screens. The new screens will list Custom Adjectives and Nouns which have been programmed into the control panel using the FS-Tools utility.

Description

```
EDIT MONITOR
1=ADJECTIVE/NOUN
2=DESCRIPTION
*****************
```

Edit Monitor Screen #5

The Description selection allows the programmer to enter additional information about the monitor module currently being programmed. This information will be displayed as part of the device label on the LCD display. Pressing *2* while viewing Edit Monitor Screen #5 will cause the following screen to be displayed:

```
DESCRIPTION    1M012
ADJECTIVE/NOUN
********************
```

Adjective/Noun Screen

A flashing cursor will appear at the first asterisk to the left. The programmer can enter additional descriptive information about the device being programmed. This information will appear on the LCD display along with the standard device label information.

A maximum of 20 characters (including spaces) can be entered. To enter alphanumeric characters from the keypad, repeatedly press the appropriate key until the desired character is displayed in the first position. For example, to enter the letter *B*, press the *2 (ABC)* key three times to toggle through the characters *2*, *A* and *B*. Press the right arrow key to move the cursor one position to the right and repeat the process to enter the next character. To enter a space, press the * *(QZ)* key four times until a blank appears in the desired position. When all characters have been entered, press the Enter key to store the information. The display will return to the Edit Monitor Screen #4, displaying the new information at the bottom of the screen.

■ Edit Module Screen for Control Modules

```
MODULES
1=ADD
2=DELETE
3=EDIT
```

Modules Screen

The programmer can change a module's existing or factory default programming by pressing *3* in the Modules Screen. The following screen will be displayed:

```
    EDIT MODULE
ENTER MODULE ADDRESS
***
```

Edit Module Screen

A flashing cursor will appear in the position of the first asterisk to the left.

The programmer keys in the three digit module address, such as *002*. When the last digit is keyed-in, if the selected address corresponds to a *control* module, a screen displaying information about the control module with the selected address will be displayed as illustrated in the following:

```
Normal CONTROL
     <ADJ><NOUN>
          ZNNN
        *SW 1M002
```

Edit Control Screen #1

In the preceding example:

- ✓ Normal - indicates that the module with the selected address is physically installed on the SLC and communicating with the control panel (enabled)
- ✓ <ADJ><NOUN> - represents the adjective and noun, which have been programmed, describing the location of the displayed device
- ✓ Control - indicates that the selected module is a control module
- ✓ X or * - represents Wireless (X) or Wired (*)
- ✓ S or * - represents Silenceable (S) or Nonsilenceable (*)

- ✓ W or * - represents Waterflow Timer Delay (W = Waterflow Timer Delay enabled, * = Waterflow Timer Delay disabled)
- ✓ ZNNN - represents the first of five possible software zones that the module is assigned to (NNN = the three digit zone number from 000 - 255)
- ✓ 1M002 - represents the Loop, Device type and Device address (1 = SLC Loop, M=Module and 002 = Module Address 02)

To change the programming for the displayed module, press the keypad *down* arrow key to view the following Edit Control screens:

```
EDIT CONTROL   1M002
  ENABLED        YES
2=TYPE CONTROL
3=SILENCEABLE   YES
```

Edit Control Screen #2

```
EDIT CONTROL
1=WALKTEST       YES
2=ZONE ASSIGNMENT
 000 *** *** *** ***
```

Edit Control Screen #3

```
EDIT CONTROL
1=ADJECTIVE/NOUN
2=DESCRIPTION
********************
```

Edit Control Screen #4

```
EDIT CONTROL
1=MNS OVERRIDE   NO
2=CTRL MOD DLY  NO
```

Edit Control Screen #5

Enabled/Disabled Module

```
EDIT CONTROL
  ENABLED          YES
2=TYPE
3=SILENCEABLE
```

Edit Control Screen #2

The system will show whether the control module is enabled or disabled. To change the status of the module, the programmer must enter system programming using a Maintenance password.

Control Type

```
EDIT CONTROL
   ENABLED         YES
2=TYPE CONTROL
3=SILENCEABLE
```

Edit Control Screen #2

To select the type of control module being programmed, press the *2* key while viewing the Edit Control Screen #2. This will cause the control panel to display the following Control Type Screens. Press the down arrow key to view additional screens and selections.

```
   CONTROL TYPE
1=NOT USED    **
2=BELL-CIRCUIT
3=HORN-CIRCUIT
```

Control Type Screen #1

While viewing one of the Control Type screens, select the type of control module being programmed by pressing the corresponding keypad number key. The display will return to the Edit Control Screen #2 and indicate the new type selection.

NOTE: A control relay module set to the Resettable Power type will follow the main circuit board 24 VDC resettable power unless the control relay module is disabled.

The following table contains control module type codes and their functions which are displayed in the Control Type screens:

Control Type	Special Function
Bell Circuit	NAC Type - supervised
Horn Circuit	NAC Type - supervised
Sounder	NAC Type - supervised
Relay-1FC	Ignore Open Circuit
Strobe Circuit	NAC Type - supervised
Control	NAC Type - supervised
Resettable Power [1]	Relay Type - Ignore Open Circuit
HVAC Shutdown RLY [2]	Relay Type - Ignore Open Circuit
HVAC Shutdown NAC [2]	NAC Type - supervised

1 When using a control relay module to supply resettable power to conventional 2-wire smoke detectors, the addressable monitor module must be programmed for Smoke-Conventional operation

2 For HVAC SHUTDOWN description, refer to “Control Module Operation” on page 143.

Silenceable

```
EDIT CONTROL
  ENABLED          YES
2=TYPE
3=SILENCEABLE
```

Edit Control Screen #2

The Silenceable selection allows the programmer to select whether output devices connected to the control module can be silenced, either by pressing the Alarm Silence key or by enabling Autosilence. Pressing the *3* key while viewing Edit Control Screen #2 will enable the Silenceable feature causing the display to read *Silenceable Yes*. Repeated presses of the *3* key will cause the display to toggle between *Silenceable Yes* and *Silenceable No*. When set to Canadian mode of operation, a third silenceable type appears, Silenceable Auto. When set to *Auto*, the control module will automatically silence after the Control Module Auto Silence timer expires.

Walktest

```
EDIT CONTROL
1=WALKTEST
2=ZONE ASSIGNMENT
 000 *** *** *** ***
```

Edit Control Screen #3

The Walktest feature allows one person to test the system devices without the necessity of manually resetting the control panel after each device activation. To enable devices, which are connected to a control module, for the Walktest feature, press *1* while viewing the Edit Control Screen #3 until the display reads *Walktest Yes*. Each press of the *1* key will cause the display to toggle between *Walktest Yes* and *Walktest No*. Refer to “Walk-test” on page 109 for additional information.

Zone Assignment

A maximum of five zones can be programmed to each addressable control module. Pressing *2* while viewing Edit Control Screen #3 displays the following screen:

```
ZONE ASSIGNMENT
Z000 *** *** *** ***
```

Zone Assignment Screen

Note that Z*** represents the Zone Number(s) corresponding to this device. The factory default for an unprogrammed device is Z000 for general alarm zone. A flashing cursor will appear on the first *0* to the left. Enter the two digit number corresponding to the zone that is to be assigned to this device. The cursor moves to the next Z*** designation. Continue entering zone assignments or the remaining zones can be left blank or programmed as general alarm zones Z000. When all desired changes have been made, press the Enter key to store the zone assignments. The display will return to the Edit Control Screen #3.

Adjective/Noun

```
EDIT CONTROL
1=ADJECTIVE/NOUN
2=DESCRIPTION
```

Edit Control Screen #4

The Adjective/Noun selection allows the programmer to enter specific descriptors about the control module currently being programmed. Pressing *1* while viewing Edit Control Screen #4 will cause the following screen to be displayed:

```
1=STANDARD ADJECTIVE
2=STANDARD NOUN
3=CUSTOM ADJECTIVE
4=CUSTOM NOUN
```

Adjective/Noun Screen

```
1=STANDARD ADJECTIVE
2=STANDARD NOUN
3=CUSTOM ADJECTIVE
4=CUSTOM NOUN
```

Adjective/Noun Screen

Pressing *1* while viewing the Adjective/Noun Screen will cause the following screen(s) to be displayed. Note that the keypad *down* arrow key must be pressed to see all the Adjective screens. Press the number corresponding to the adjective that is to be used as a descriptor for the location of the control module currently being programmed.

```
********************
1=NORTH
2=SOUTH
3=EAST
```

Adjective Screen #1

```
********************
1=WEST
2=FRONT
3=CENTER
```

Adjective Screen #2

```
********************
1=REAR
2=UPPER
3=LOWER
```

Adjective Screen #3

```
********************
1=MAIN
2=FIRST
3=2ND
```

Adjective Screen #4

```
********************
1=3RD
2=4TH
3=5TH
```

Adjective Screen #5

```
********************
1=FLOOR 1
2=FLOOR 2
3=FLOOR 3
```

Adjective Screen #6

```
********************
1=FLOOR 4
2=FLOOR 5
3=ROOM
```

Adjective Screen #7

```
1=STANDARD ADJECTIVE
2=STANDARD NOUN
3=CUSTOM ADJECTIVE
4=CUSTOM NOUN
```

Adjective/Noun Screen

Pressing *2* while viewing the Adjective/Noun Screen will cause the following screen(s) to be displayed. Note that the keypad *down* arrow key must be pressed to see all the Noun screens. Press the number corresponding to the noun that is to be used as a descriptor for the location of the control module currently being programmed.

```
********************
1=BASEMENT
2=BOILER RM
3=CLASSROOM
```

Noun Screen #1

```
********************
1=CLOSET
2=CORRIDOR
3=ELECTRIC RM
```

Noun Screen #2

```
********************
1=ELEVATOR
2=ENTRANCE
3=FLOOR
```

Noun Screen #3

```
********************
1=GARAGE
2=HALLWAY
3=HVAC RM
```

Noun Screen #4

```
********************
1=KITCHEN
2=LOBBY
3=OFFICE
```

Noun Screen #5

```
********************
1=PATIENT
2=RESTROOM
3=ROOM
```

Noun Screen #6

```
********************
1=STAIRWAY
2=STOREROOM
3=WING
```

Noun Screen #7

```
********************
1=ZONE
```

Noun Screen #8

Pressing *3* or *4* while viewing the Adjective/Noun Screen will display screens similar to the previous Adjective and Noun Screens. The new screens will list Custom Adjectives and Nouns which have been programmed into the control panel using the FS-Tools programming utility.

Description

```
EDIT CONTROL
1=ADJECTIVE/NOUN
2=DESCRIPTION
```

Edit Control Screen #4

The Description selection allows the programmer to enter additional information about the control module currently being programmed. This information will be displayed as part of the device label on the display. Pressing *2* while viewing Edit Control Screen #4 will cause the following screen to be displayed:

```
DESCRIPTION    1M002
ADJECTIVE/NOUN
********************
```

Adjective/Noun Screen

A flashing cursor will appear at the first asterisk to the left. The programmer can enter additional descriptive information about the device being programmed. This information will appear on the display along with the standard device label information.

A maximum of 20 characters (including spaces) can be entered. To enter alphanumeric characters from the keypad, repeatedly press the appropriate key until the desired character is displayed in the first position. For example, to enter the letter *B*, press the *2 (ABC)* key three times to toggle through the characters *1*, *A*, and *B*. Press the right arrow key to move the cursor one position to the right and repeat the process to enter the next character. To enter a space, press the * *(QZ)* key four times until a blank appears in the desired position. When all characters have been entered, press the Enter key to store the information. The display will return to the Edit Control Screen #4, displaying the new information at the bottom of the screen.

MNS Override

This feature is not available at this time.

Control Module Delay

```
EDIT CONTROL
1=MNS OVERRIDE    NO
2=CTRL MOD DLY    NO
```

Edit Control Screen #5

The control module delay feature, if enabled, will delay activation after being triggered by an alarm condition. Pressing *2* while viewing Edit Control Screen #5 will cause the display to change from the factory default of *Ctrl Mod Dly No* to *Ctrl Mod Dly Yes*. Each press of the *1* key will cause the display to toggle between the two options. Delay time varies from 0-180 seconds. See “Control Module Delay” on page 72 to set the delay time. The control module must first be set to *Silenceable No* to enable the Delay Timer.

3.5.3 Zone Setup

```
 PROGRAMMING
1=AUTOPROGRAM
2=POINT PROGRAM
3=ZONE SETUP
```

Programming Screen #2

Pressing *3* while viewing Programming Screen #2 will access the Zone Setup screens as illustrated below:

```
   ZONE SETUP
1=ZONE TYPES
2=ZONE MESSAGE
3=SPECIAL PURPOSE
```

Zone Setup Screen #1

```
   ZONE SETUP
1=ZONES INSTALLED
2=ZONES ENABLED
3=ZONES DISABLED
```

Zone Setup Screen #2

```
   ZONE SETUP
1=ZONES AVAILABLE
```

Zone Setup Screen #3

Zone Types

```
   ZONE SETUP
1=ZONE TYPES
2=ZONE MESSAGE
3=SPECIAL PURPOSE
```

Zone Setup Screen #3

Zone Types must be programmed only if a Communicator, programmed for zone reporting, is installed on the control panel. Pressing *1* for Zone Types, while viewing Zone Setup Screen #1, will display a screen similar to the following:

```
  ZONE TYPE PROG
1=Z000  MONITOR
2=Z001  MONITOR
3=Z002  MONITOR
```

Zones Installed Screen

This display will show the system zones (default and user programmed) and their associated types. Note that an up and/or down arrow will appear in the upper right corner of the display, indicating that additional screens of zone information exists. Press the up or down arrow keys to view zones Z000 through Z255.

Zone types can be changed by pressing the keypad number key corresponding to the zone in each Zones Installed Screen. Available zone types will be displayed in the resultant screens. For example, to change the zone type for zone Z002 in the screen illustrated above, press *3*. The following screens will be displayed:

```
  ZONE TYPE PROG
1=MONITOR
2=SMOKE PHOTO
3=WATERFLOW
```

Zone Type Program Screen #1

```
  ZONE TYPE PROG
1=HEAT
2=PULL STATION
3=DUCT
```

Zone Type Program Screen #2

```
  ZONE TYPE PROG
1=MEDICAL
2=HAZARD
3=TAMPER
```

Zone Type Program Screen #3

```
  ZONE TYPE PROG
1=SUPERVISORY
2=PROC. MON.
3=SMOKE ION
```

Zone Type Program Screen #4

```
  ZONE TYPE PROG
1=CO ZONE
2=NONE
```

Zone Type Program Screen #5

To change the zone type for Z002 to Pull Station, scroll the display until Zone Type Program Screen #2 is displayed. Press *2* to program zone Z002 as a Pull Station zone. The display will return to the Zones Installed Screen showing zone Z002 and the Pull Station program type. Repeat the procedure for each zone to be changed.

IMPORTANT! *In Zone Type Program Screen #1, selecting WATERFLOW will assign a Waterflow silenceable zone type to the selected zone. Any signaling devices programmed to the same zone can be silenced by pressing the Alarm Silence key or by using the auto-silence feature.*

To program a waterflow circuit as non-silenceable, refer to *"System Setup" on page 67.*

NOTE: Zone Types are only relevant for Central Station reporting. Changing a zone type will *only* change how it is reported to the Central Station.

Zone Message

This feature is not available at this time.

Special Purpose Zone

Pressing *3* for Special Purpose, while viewing Zone Setup Screen #1, will display the following screens:

```
 SPECIAL PURPOSE
1=PAS 253        OFF
2=PRE-SIGNAL 254 OFF
3=TWO STAGE 255  OFF
```

Special Purpose Zone Screen #1

```
 SPECIAL PURPOSE
1=LOCAL ALM 252  OFF
2=CO ACTIVE 251  OFF
3=INSUITE SIL 250 OFF
```

Special Purpose Zone Screen #2

Zones 250, 251, 252, 253, 254 and 255 can be programmed for normal zone operation or for special purpose applications. In the above illustration, the four zones are shown Off, which means they can be programmed to function in the same manner as all other zones, by assigning them to input and output devices in the Programming Zone Assignment Screen.

Pressing *1* will cause the display to change to *PAS 253 On*. Each press of the *1* key will cause the display to toggle between *PAS 253 On* and *PAS 253 Off*. When Zone 253 is programmed On, a PAS (Positive Alarm Sequence) activation of any smoke detector will cause Zone 253 to activate. By assigning Zone 253 to a control module in the Programming Zone Assignment Screen, an output device connected to the control module can be used to indicate a PAS condition in the control panel. *Do not assign Zone 253 to a Notification Appliance Circuit when using this zone to indicate a PAS condition. Attempting to do so will generate an error message and will be prevented by software checks.*

Pressing *2* will cause the display to change to *Pre-signal 254 On*. Each press of the *2* key will cause the display to toggle between *Pre-signal 254 On* and *Pre-signal 254 Off*. When Zone 254 is programmed On, a Pre-signal activation of any device will cause Zone 254 to activate. By assigning Zone 254 to a control module in the Programming Zone Assignment Screen, an output device connected to the control module can be used to indicate a Pre-signal condition in the control panel. *Do not assign Zone 254 to a Notification Appliance Circuit when using this zone to indicate a Pre-signal condition. Attempting to do so will generate an error message and will be prevented by software checks.*

Pressing *3* will cause the display to change to *Two Stage 255 On*. Each press of the *3* key will cause the display to toggle between *Two Stage 255 On* and *Two Stage 255 Off*. Refer to "Two Stage Operation" on page 74 for a description of this feature.

Pressing *1* while viewing the Special Purpose Zone Screen #2 will cause the display to change to *Local Alm 252 On*. Each press of the *1* key will cause the display to toggle between *Local Alm 252 On* and *Local Alm 252 Off*. When Zone 252 is programmed On, a Local Alarm activation of any smoke detector will cause Zone 252 to activate. By assigning Zone 252 to a control module in the Programming Zone Assignment Screen, an output device connected to the control module can be used to indicate a local alarm condition in the control panel. *Local Alarm Zone alarms are not reported to the Central Station.*

Pressing *2* while viewing the Special Purpose Zone Screen #2 will cause the display to change to *CO Active 251 On*. Each press of the *2* key will cause the display to toggle between *CO Active 251 On* and *CO Active 251 Off*. When enabled, this zone will activate when a CO Alarm is active on the panel without requiring direct zone mapping to an input device.

When the panel is set to Canadian mode, pressing *3* while viewing the Special Purpose Zone Screen #2 will cause the display to change to *In Suite Sil 250 On*. Each press of the *3* key will cause the display to toggle between *In Suite Sil 250 On* and *In Suite Sil 250 Off*. When enabled, this zone works in conjunction with the In Suite Silence Timer. When enabled, this zone will activate only when a fire alarm is active on the panel and will not activate via zone mapping to an input device. When the In Suite Silence Timer expires, all silenceable output devices and NACs that are activated by only the In Suite Silence Zone will silence. If an output or NAC is activated by a general zone and the In Suite Silence Zone, the output or NAC will not silence when the In Suite Silence Timer expires. This timer restarts with each new fire alarm that occurs on the system. If the timer expires, all silenced outputs and NACs that were silenced by the In Suite Silence Timer will resound with a new fire alarm and the In Suite Silence Timer will restart. In-suite silence cannot be used at the same time as two-stage operation.

Zones Installed

```
ZONE SETUP
1=ZONES INSTALLED
2=ZONES ENABLED
3=ZONES DISABLED
```

Zone Setup Screen #2

Pressing *1* for Zones Installed, while viewing Zone Setup Screen #2, will display a screen similar to the following:

```
ZONES INSTALLED
000 001 002 003 004
005
```

Zones Installed Screen

This display will show all of the zones that have been programmed into the control panel. Note that an up and/or down arrow may appear in the upper right corner of the display, indicating that additional screens of zone information exists. Press the up or down arrow keys to view the additional zones.

Zones Enabled

Pressing *2* for Zones Enabled, while viewing Zone Setup Screen #2, will display a screen similar to the following:

```
ZONES ENABLED
000 001 002 004 005
006 007 008 009 010
011 012 013 014 015
```

Zones Enabled Screen

This display will show all of the zones that are enabled in the control panel. Note that an up and/or down arrow may appear in the upper right corner of the display, indicating that additional screens of zone information exists. Press the up or down arrow keys to view the additional zones.

Zones Disabled

Pressing *3* for Zones Disabled, while viewing Zone Setup Screen #2, will display a screen similar to the following:

```
ZONES DISABLED
003
```

Zones Disabled Screen

This display will show all of the zones that are disabled in the control panel. Note that an up and/or down arrow may appear in the upper right corner of the display, indicating that additional screens of zone information exists. Press the up or down arrow keys to view the additional zones.

Zones Available

```
ZONE SETUP
1=ZONES AVAILABLE
```

Zone Setup Screen #3

Pressing 2 while viewing Zone Setup Screen #3 will display the following screen:

```
ZONES AVAILABLE ⇩
001 002 003 004 005
006 007 008 009 010
011 012 013 014 015
```

The display will show all of the zones that are still available for programming. Note that an up and/or down arrow may appear in the upper right corner of the display, indicating that additional screens of zone information exists. Press the up or down arrow key to view additional screens.

3.5.4 Loop Setup

```
PROGRAMMING
1=LOOP SETUP
2=SYSTEM SETUP
3=NOT USED    ****
```

Programming Screen #2

Loop Setup allows the programmer to configure the SLC Loop for NFPA Class B or Class A wiring and to select the loop protocol. Pressing *1* while viewing Programming Screen #2 will cause the following screen to be displayed:

```
LOOP SETUP
1=LOOP 1
2=LOOP 2
3=LOOP 3
```

Loop Setup Screen #1

Loop

Select the desired loop for setup by selecting *1* for *Loop 1*, *2* for *Loop 2*, or *3* for *Loop 3*. Loops 2 and 3 are only available if any optional SLC-3LS Loop Expander cards have been installed. Select the desired loop by pressing the corresponding number. For each loop, the user can set the SLC-3LS as an installed module, and set wiring class and polling protocol.

```
LOOP SETUP
1=INSTALLED        YES
2=CLASS              B
3=PROTOCOL LITESPEED
```

Loop Setup Screen #2

■ Installed

```
LOOP SETUP
1=INSTALLED        NO
2=CLASS             B
3=PROTOCOL LITESPEED
```

Programming Screen #2

If additional SLC-3LS cards have been installed, adding a second or third SLC loop to the panel, it must be activated in user programming. After pressing 2 or 3 on Loop Setup Screen #1 for the desired loop, pressing *1* while viewing the Loop Setup Screen #2 will cause the display to change to *Installed Yes*. Each press of the *1* key will cause the display to toggle between *Installed Yes* and *Installed No.* Note that Loop 1 is fixed and cannot be set to *Installed No.*

■ Class

To program the SLC Class for the selected loop, press *2* for Class, while viewing Loop Setup Screen. In the preceding example, the FACP is programmed for Class B SLC wiring as indicated by the *B* to the right of *Class* in the display. To change the wiring class, press *1* to toggle the display to read *Class A.* Each press of the *1* key will cause the display to toggle between *Class B* and *Class A.*

NOTE: If the FACP reports an open fault on an SLC Loop programmed for Class A, the trouble condition will latch at the FACP. When the SLC Loop has been repaired, the Reset button must be pressed at the FACP (at least 2 minutes after the trouble has been repaired) to clear the SLC trouble.

■ Loop Protocol

Loop Protocol refers to the SLC loop mode of operation. Refer to “Wire Requirements” on page 141 for wire specifications based upon SLC protocol. There are two Loop Protocols available:

- CLIP (Classic Loop Interface Protocol) - which is used for the older legacy addressable devices such as the M300 Series modules and detectors.
- LiteSpeed (factory default setting) - used for the 350 Series or newer addressable devices for quicker response times. Note that the legacy devices can operate only in CLIP mode while the newer devices are compatible with CLIP and LiteSpeed modes of operation.

Pressing *2* while viewing the Loop Setup Screen will toggle between *CLIP* and *LiteSpeed* Protocols.

Device Addressing

It is important to note that the FACP addressable device capacity is 159 detectors and 159 control/ monitor modules per SLC loop. Since older legacy addressable devices cannot be set to addresses above 099, the newer series devices must be used when addresses 100 to 159 are to be installed. It is permissible to mix old and new devices in the same panel, however, the FACP must be programmed for CLIP mode.

3.5.5 System Setup

System Setup allows the programmer to configure the following control panel features:

- *Function Keys*: This feature allows the user to rapidly enable/disable various fire panel inputs and outputs during scheduled maintenance.
- *Banner:* This option allows the user to change the top two lines of the LCD display from the blank factory default readout to a user defined readout when the control panel is in Normal condition.
- *Time/Date:* This feature allows the programmer to set the time, display format (24 hr or 12 hr), date and daylight savings time feature into the FACP memory
- *Timers:* This option allows the programmer to set the PAS (Positive Alarm Sequence) time delay, Pre-Signal time delay and Waterflow time delay.
- *NACs:* This feature allows the programmer to configure the control panel Notification Appliance Circuits for a variety of options, such as circuit type, silenceable/nonsilenceable, autosilence, coding, silence inhibit, zone assignment and enable/disable.
- *Relays:* This option allows programming of two onboard relays for activation by various control panel events, such as alarm, trouble, supervisory, etc.
- *Canadian Option:* This option allows the programming of certain options to Canadian specifications.
- *Waterflow Silenceable:* This option provides the ability to silence any output circuit activated by a monitor module programmed as a waterflow type.
- *Auxiliary Power*: This option configures the use of the 24VDC auxiliary power output at TB11 on the FACP.
- *Trouble Reminder*: This feature provides an audible reminder that an alarm or trouble still exists on the FACP after the control panel has been silenced. The control panel piezo sounder will pulse once every 15 seconds during an alarm and every two minutes during a trouble condition, after the Alarm Silence or Acknowledge key is pressed. The piezo will continue to sound at these rates until the alarm or trouble condition is cleared. If the trouble condition is not cleared within a selected time of either 4 or 24 hours, the panel will reactivate the local trouble sounder at the panel. When used with SWIFT wireless devices, the Trouble Reminder must be set to 4 hours.
- *Language*: This option allows the user to switch between English and French language text on the panel display.
- *4XTM Supervision*: This feature enables supervision of an installed 4XTMF Transmitter Module.
- *Remote Sync Enable*: This feature controls the activation of notification appliances in such a way that all devices will turn on and off at exactly the same time.
- *Charger Enable*: This option allows the user to install an external battery charger.
- *Battery Size:* This option allows the user to select the size of the battery being used to allow for proper charging of the panel.

```
PROGRAMMING
1=LOOP SETUP
2=SYSTEM SETUP
3=NOT USED  ****
```

Programming Screen #2

Pressing *2* for System Setup, while viewing Programming Screen #2, will cause the following screens to be displayed:

```
SYSTEM SETUP
1=FUNCTION KEYS
2=BANNER
3=TIME/DATE
```

System Setup Screen #1

```
SYSTEM SETUP
1=TIMERS
2=NAC
3=RELAYS
```

System Setup Screen #2

```
SYSTEM SETUP
1=CANADIAN OPT. OFF
2=WATERFLOW SIL. NO
3=MNS OVERRIDE    NO
```

System Setup Screen #3

```
SYSTEM SETUP
1=AUX POWER
2=TROUBLE REM   24HR
3=LANGUAGE
```

System Setup Screen #4

```
SYSTEM SETUP
1=4XTM SPV ENAB  NO
2=REM SYNC ENAB  YES
3=NOT USED     ***
```

System Setup Screen #5

```
SYSTEM SETUP
1=CHARGER ENAB  YES
2=BAT SIZE 18-26 AH
3=NOT USED   ***
```

System Setup Screen #6

Function Keys

The ES-1000X keypad has 4 programmable function keys. These keys can be programmed to allow rapid disable/enable of various fire panel inputs and outputs during scheduled maintenance. Pressing any function key results in a trouble signal at the panel. Pressing *1* on System Setup Screen #1 displays the following:

```
FUNCTION KEYS
1=F1        3=F3
2=F2        4=F4
```

Function Keys Screen

Select *1*, *2*, *3*, or *4* to program the corresponding Function Key. The following screens display for each Function Key where "(X)" represents the number of the key chosen.

```
F(X) KEY OPERATION
1=KEY ENABLED  YES
2=ZONES
3=ALL ZONES
```

Function Keys Screen #1

```
F(X) KEY OPERATION
1=NACS        1.2.3.4
2=REM SYNC DISB  NO
```

Function Keys Screen #2

To Enable or Disable the Function Key, press the *1* key while viewing the Function Keys Screen #1. Each press of the key will toggle the screen between *Key Enabled Yes* and *Key Enabled No*.

Pressing *2* key while viewing the Function Keys Screen #1 allows the user to select individual zones that the Function Key will disable. Pressing *3* assigns all zones to the selected Function Key. This button toggles *All Zones Included On* and *All Zones Included Off*. Note that no change appears on the screen when this button is pressed. However, the user can verify the change by pressing *2* to see the *Zones* listed.

■ NACs

Each function key can be assigned to control any of the 4 onboard NAC circuits on the ES-1000X. By pressing the *2* key while viewing the Function Keys Screen #2 the following screen displays, allowing the user to select the desired NAC circuit(s).

```
    F(X) NACS
1=NAC 1  Y  3=NAC 3  N
2=NAC 2 Y  4=NAC 4  N
```

Function Keys Screen

Pressing *1*, *2*, *3*, or *4* toggles the screen between *Yes* (controlled by function key) and *No* (not controlled by function key) for each onboard NAC circuit.

■ Remote Sync Disable

```
  F(X) OPERATION
1=NACS        1.2.3.4
2=REM SYNC DISB  NO
```

Function Keys Screen #2

The Remote Synchronization (TB8 on the FACP's main circuit board) can also be disabled through programming of a function key.To disable remote synchronization, press the *3* key while viewing the Function Keys Screen #2. Each press of the key will toggle the screen between *Rem Sync Disb Yes* and *Rem Sync Disb No*.

Banner

```
  SYSTEM SETUP
1=FUNCTION KEYS
2=BANNER
3=TIME/DATE
```

System Setup Screen #1

The top line of the display, which appears when the control panel is in normal mode, can be changed by using the Banner option. Pressing *2* while viewing System Setup Screen #1 will cause the following to be displayed:

```
     BANNER
1=FACTORY
2=USER DEFINED
```

Banner Screen

Pressing *1* while viewing the Banner Screen will select the blank factory default banner setting and display the following screen:

```
  FACTORY BANNER
```

Factory Banner Screen

Pressing the Enter key will store this selection in nonvolatile memory and return the display to the Banner Screen.

Pressing *2* while viewing the Banner Screen will cause the following screens to be displayed:

```
USER BANNER - LINE 1

ENTER OR PRESS ENTER
```

User Defined Banner Screen #1

```
USER BANNER - LINE 2
ENTER OR PRESS ENTER
********************
```

User Defined Banner Screen #2

These screens allow the programmer to enter a two line custom banner. A flashing cursor will appear in the bottom left corner of each display. A maximum of 20 characters (including spaces) can be entered into each screen for a total of two lines with 40 characters. After entering up to 20 characters in the first screen, press *Enter* to view the second screen. Enter up to 20 characters in the second screen in the same manner or just press *Enter* if a second banner line is not being entered. To quickly clear the current banner, press the *CLR* key.

To enter alphanumeric characters from the keypad, repeatedly press the appropriate key until the desired character is displayed in the first position. For example, to enter the letter *B*, press the *2 (ABC)* key three times to toggle through the characters *1*, *A*, and *B*. Press the right arrow key to move the cursor one position to the right and repeat the process to enter the next character. To enter a space, press the ** (QZ)* key four times to place a blank in the desired position. When all characters have been entered, press the *Enter* key to store the information. The display will return to the Banner Screen.

Time/Date

```
  SYSTEM SETUP
1=TROUBLE REM
2=BANNER
3=TIME/DATE
```

System Setup Screen #1

The control panel time and date can be changed by pressing *3* while viewing the System Setup Screen #1. The following screen will be displayed:

```
   TIME AND DATE
1=TIME  06:34 AM
2=DATE  12-18-2022
3=CLOCK FORMAT  12HR
```

Time-Date Screen #1

```
   TIME AND DATE
1=DAYLIGHT SAVING
```

Time-Date Screen #2

■ Time

To change the time, press *1* while viewing the Time-Date Screen. The following screen will be displayed:

```
ENTER TIME

10:00 AM
1=AM          2=PM
```

Time Screen

A flashing cursor is located toward the top left of the display. Below the cursor is the current time. To change the time, enter the two-digit hours followed by the two-digit minutes. The cursor will move one position to the right each time a digit is entered. After the last minutes digit is entered, the cursor will again move one position to the right. At this point enter *1* for AM or *2* for PM. The display will then return to the Time-Date Screen which will show the new time entry. If an error is made while entering a digit, press the *CLR* key to delete the entire entry and beginning again.

■ Date

To change the date, press *2* while viewing the Time-Date Screen. The following screen will be displayed:

```
ENTER DATE

MONTH DAY YEAR
12-18-22
```

Date Screen

A flashing cursor is located toward the top left of the display. Below the cursor is the current date. To change the date, enter the two-digit month followed by the two-digit day and then the two-digit year (17 for 2017, 18 for 2018, etc.). The cursor will move one position to the right each time a digit is entered. After the last year digit is entered, the display will return to the Time-Date Screen which will show the new date entry. If an error is made while entering a digit, press the *CLR* key to delete the entire entry and beginning again.

■ Clock Format

The clock can be configured to display 12 hour (AM & PM) or 24 hour (military) time. Pressing *3* while viewing the Time-Date screen will cause the display to toggle between 12HR and 24HR. Select 12HR for 12 hour display or 24HR for 24 hour display.

NOTE: If the clock is changed to 24 hour (military) format, the date will change to the European standard of **Day-Month-Year** (for display purposes only).

■ Daylight Saving Time

```
TIME AND DATE
1=DAYLIGHT SAVINGS
```

Time & Date Screen #2

Pressing *1* while viewing Time-Date Screen #2 will cause the following screens to be displayed:

```
DAYLIGHT SAVINGS ⇩
1=ENABLED      YES
2=START MONTH   MAR
3=START WEEK  WEEK 2
```

Daylight Savings Screen #1

```
DAYLIGHT SAVINGS ⇧
1=END MONTH     NOV
2=END WEEK    WEEK 1
```

Daylight Savings Screen #2

Pressing *1* while viewing Daylight Savings Screen #1 will cause the display to toggle between *Enabled Yes* and *Enabled No*. The control panel will automatically update the time for daylight savings time when *Enabled Yes* is selected.

Pressing *2* while viewing Daylight Savings Screen #1 will display another screen which allows the programmer to select the month that daylight savings time will begin. In this subscreen, pressing *1* will select March, *2* will select April, and *3* will select May.

Pressing *3* while viewing Daylight Savings Screen #1 will display two subscreens which allow the programmer to select the week of the month that daylight savings time will begin. In the first subscreen, pressing *1* will select the first week, *2* will select the second week and *3* will select the third week, while in the second subscreen, pressing *1* will select the fourth week and *2* will select the last week of the selected month.

Pressing *1* while viewing Daylight Savings Screen #2 will display another screen which allows the programmer to select the month that daylight savings time will end. In this subscreen, pressing *1* will select September, *2* will select October, and *3* will select November.

Pressing 2 while viewing Daylight Savings Screen #2 will display two subscreens which allow the programmer to select the week of the month that daylight savings time will end. In the first subscreen, pressing *1* will select the first week, *2* will select the second week and *3* will select the third week, while in the second subscreen, pressing *4* will select the fourth week and *5* will select the last week of the selected month.

Timers

```
  SYSTEM SETUP
1=TIMERS
2=WAC
3=RELAYS
```

System Setup Screen #2

Timer delays for PAS, Pre-signal and waterflow activation can be programmed by pressing *1* while viewing System Setup Screen #2. The following screen will be displayed:

```
     TIMERS
1=PAS DELAY     000
2=PRE SIGNAL    000
3=WATERFLOW     000
```

Timer Screen #1

```
     TIMERS
1=AC LOSS DELAY  02
2=CTRL MOD DLY  000
```

Timer Screen #2

■ PAS (Positive Alarm Sequence) Delay

```
  TIMERS
1=PAS DELAY   000
2=PRE SIGNAL  000
3=WATERFLOW  000
```

Timer Screen #1

The factory default setting for PAS is 000 for no delay. To select a PAS delay of 001 to 180 seconds for all devices programmed for PAS, press *1* while viewing Timer Screen #1. The following display will appear:

```
     PAS DELAY

RANGE 0-180 SECONDS
***
```

PAS Delay Screen

A flashing cursor is positioned in the lower left corner of the display. Enter a delay time consisting of three digits, such as 005 for five seconds. Upon entering the third digit, the time delay will be stored in the control panel memory and the display will return to the Delay Screen which will indicate the new delay time.

■ Pre-signal Delay

The factory default setting for Pre-signal delay is 000 for no delay. To select a Pre-signal delay of 001 to 180 seconds for all devices programmed for Pre-signal, press *2* while viewing Timer Screen #1. The following screen will be displayed:

```
  PRESIGNAL DELAY

RANGE 0-180 SECONDS
***
```

Pre-signal Delay Screen

A flashing cursor is positioned in the lower left corner of the display. Enter a delay time consisting of three digits, such as 009 for nine seconds. Upon entering the third digit, the time delay will be stored in the control panel memory and the display will return to the Delay Screen which will indicate the new delay time.

Note that the FACP allows programming for PAS and Pre-signal timers, but a detector can only be programmed for either PAS or Pre-signal operation. Refer to“Edit Detector” on page 51 for programming details.

■ Waterflow Delay

```
  TIMER
1=PAS DELAY   000
2=PRE SIGNAL  000
3=WATERFLOW   000
```

Timer Screen #1

A delay can be added prior to declaring a waterflow type of alarm. Be careful to include any built-in delays of the waterflow device. The factory default setting for Waterflow delay is 000 for no delay. To select a Waterflow delay of 01 to 90 seconds for all devices programmed for Waterflow delay, press *3* while viewing Timer Screen #1. The following screen will be displayed:

```
  WATERFLOW DELAY

RANGE 0-90 SECONDS
**
```

Waterflow Delay Screen

A flashing cursor is positioned in the lower left corner of the display. Enter a delay time consisting of two digits, such as 25 for twenty-five seconds. Upon entering the second digit, the time delay will be stored in the control panel memory and the display will return to the Delay Screen which will indicate the new delay time.

■ AC Loss Delay

```
  TIMER
1=AC LOSS DELAY
2=CTRL MOD DLY
```

Timer Screen #2

The reporting of a loss of AC power to a central station can be delayed by programming the length of the desired delay. The factory default setting is 2 hours. Press *1* while viewing Timer Screen #2 to display the following:

```
 AC LOSS DELAY
1=NO DELAY
2=ENTER DELAY
```

AC Loss Delay Screen #1

Pressing *1* while viewing AC Loss Delay Screen #1 will program the FACP to transmit an AC Loss report immediately to the central station.

Pressing *2* while viewing AC Loss Delay Screen #1 will display the following:

```
AC LOSS DELAY

RANGE 00-23 HOURS
**
```

AC Loss Delay Screen #2

A flashing cursor will appear in the lower left corner of the display. Type the two digit AC loss reporting delay in hours (00 to 23 hour delay). When the second digit is entered, the display will return to AC Loss Delay Screen #1. Refer to the table on page 43 for permissible settings.

NOTE: Upon the loss of AC power at the control panel, relays programmed for 'AC Loss' will transfer immediately, regardless of the AC Loss Delay setting. If no trouble exists at the panel other than AC Loss, the System Trouble relay and 4XTMF Form-C Trouble contact will delay its activation for the duration of the AC Loss Delay setting.

■ Control Module Delay

```
  TIMER
1=AC LOSS DELAY
2=CTRL MOD DLY
```

Timer Screen #2

The control module delay feature, if enabled, will delay activation of a control module after being triggered by an alarm condition. Pressing *2* while viewing Timer Screen #2 will display the following:

```
CTRL MOD DELAY

RANGE 00-180 SECONDS
***
```

Control Module Delay Screen

A flashing cursor will appear in the lower left corner of the display. Type the three digit control module delay in seconds (00 to 180 second delay). When the third digit is entered, the display will return to the Delay Screen which will indicate the new delay time. Refer to the table on page 43 for permissible settings.

■ Control Module Auto Silence *(Canadian Mode Only)*

```
  TIMER
1=AC LOSS DELAY
2=CTRL MOD DLY
3=CTRL AUTO SIL. 000
```

Timer Screen #2

The Control Module Auto Silence feature is only available when the FACP is in Canadian mode of operation. When enabled, this feature automatically silences all silenceable control modules after a programmed length of time. To enable this feature and program the time delay before Control Module Auto Silence activation, press *2* while viewing Timer Screen #2. The following screens will be displayed:

```
CTRL AUTO SILENCE ⇩
1=NO
2=5 MINUTES
3=10 MINUTES
```

Control Auto Silence Screen #1

```
CTRL AUTO SILENCE ⇕
1=15 MINUTES
2=20 MINUTES
3=25 MINUTES
```

Control Auto Silence Screen #2

```
CTRL AUTO SILENCE ⇧
1=30 MINUTES
```

Control Auto Silence Screen #3

To disable the Auto Silence feature, press *1* for *No* while viewing Control Module Auto Silence Screen #1. To enable the Auto Silence feature, press the number corresponding to the time delay which will elapse before Control Module Auto Silence activates. This information will be stored in memory and the display will return to Timer Screen #2.

■ In-Suite Silence *(Canadian Mode Only)*

```
  TIMER
1=IN SUITE SIL.    30
2=SUITE RESOUND    01
```

Timer Screen #3

The In-Suite Silence feature is only available when the FACP is in Canadian mode of operation. When enabled, this feature automatically silences all active outputs mapped to the In-Suite Silence Zone (as described in "Special Purpose Zone" on page 65) after a programmed length of time. Pressing *1* while viewing Timer Screen #3 will display the following.

```
IN SUITE SILENCE

RANGE 1-30 MINUTES
**
```

In Suite Silence Delay Screen

A flashing cursor will appear in the lower left corner of the display. Type the two digit in-suite silence delay in minutes (01 to 30 minute delay). The default time is 30 minutes. When the second digit is entered, the display will return to the Delay Screen which will indicate the new delay time.

NOTE: If the In-Suite Silence Timer is set shorter than the Silence Inhibit feature, the system will not silence.

■ Suite Resound *(Canadian Mode Only)*

```
  TIMER
1=IN SUITE SIL.   30
2=SUITE RESOUND   01
```

Timer Screen #3

The Suite Resound feature is only available when the FACP is in Canadian mode of operation. When enabled, this feature will resound all outputs and NACs that were silenced by the In Suite Silence timer (if there is an unacknowledged fire alarm on the panel) after a programmed length of time. Once the Suite Resound Timer occurs, additional fire alarms on the system will not restart the In Suite Silence timer. Pressing *2* while viewing Timer screen #3 will display the following.

```
   SUITE RESOUND

RANGE 1-10 MINUTES
**
```

In Suite Resound Screen

A flashing cursor will appear in the lower left corner of the display. Type the twp digit in suite silence delay in minutes (01 to 10 minute delay). The default time is 1 minute. When the second digit is entered, the display will return to the Delay Screen which will indicate the new delay time. The Suite Resound Timer starts when the In Suite Silence timer expires.

NACs (Notification Appliance Circuits)

```
  SYSTEM SETUP
1=TIMERS
2=NACS
3=RELAYS
```

System Setup Screen #2

The options for the NACs on the control panel main circuit board can be configure by pressing *2* while viewing System Setup Screen #2. The following screens will be displayed:

```
      NACS
1=NAC 1      3=NAC 3
2=NAC 2      4=NAC 4
```

NAC Selection Screen

The Notification Appliance Circuits can be configured independently by pressing *1* for NAC 1, *2* for NAC 2, *3* for NAC 3, or *4* for NAC 4.

The following screens will be displayed for each selection:

```
      NAC #
1=ENABLED        YES ⇩
2=TYPE SYNCED STROBE
3=SILENCEABLE   YES
```

NAC Screen #1

```
      NAC #
1=AUTO SILENCE   00 ⇩
2=CODING     STEADY
```

NAC Screen #2

```
      NAC #
1=ZONE ASSIGNMENT ⇩
000 *** *** *** ***
2=SIL. INHIBIT     NO
```

NAC Screen #3

```
      NAC #
1=SYNC TYPE        S ⇧
2=MNS OVERRIDE    NO
3=MNS ACTIVE      NO
```

NAC Screen #4

■ Enabled

Pressing *1* while viewing NAC Screen #1 will cause the display to change to *Enabled No*. This will prevent the selected main circuit board NAC from activating its devices. Each press of the *1* key will cause the display to toggle between *Enabled Yes* and *Enabled No*.

NOTE: The programming for NAC 1 will determine the operation of the remote power supply sync.

■ Type

```
  NAC #
1=ENABLED
2=TYPE
3=SILENCEABLE
```

NAC Screen #1

The main circuit board NAC type can be programmed by pressing *2* while viewing NAC Screen #1. The following screen will be displayed. Press the down arrow key to view additional screens:

```
      NAC TYPE ⇩
1=BELL
2=HORN
3=STROBE
```

Type Screen #1

Select the NAC device type by pressing the number corresponding to the type in the appropriate screen. When the selection is made, the display will return to NAC Screen #1.

The following table contains NAC type codes and their functions:

NAC Type Code	Special Function
Bell	None
Horn	None
Strobe	None
Synced Strobe	Synchronized to manufacturer
Strobe Sil Sync	Same as Synced Strobe but Silence turns off audible & visual devices
Blank	None

■ Silenceable

Pressing *3* while viewing NAC Screen #1 will cause the display to change to *Silenceable No*. This will prevent the selected main circuit board NAC from being silenced by pressing the Alarm Silence key or by the Auto Silence feature. Each press of the *3* key will cause the display to toggle between *Silenceable Yes* and *Silenceable No*.

Important*: When a Notification Appliance Circuit with a mix of audible and visual devices is programmed for silenceable and the* **Synced Strobe** *feature is selected, only the audible devices will be turned off if the Silence key is pressed or if the Auto Silence feature is enabled. The visual devices (strobes, etc.) will continue to operate. If the* **Strobe Sil Sync** *feature is selected, Silence or Auto Silence will turn off both audible and visual devices.*

■ Auto Silence

```
  NAC #
1=AUTO SILENCE
2=CODING      STEADY
```

NAC Screen #2

The Auto Silence feature, when enabled, automatically silences all main circuit board silenceable notification appliances after a programmed length of time. To enable this feature and program the time delay before Auto Silence activation, press *1* while viewing NAC Screen #2. The following screens will be displayed:

```
  AUTO SILENCE
1=NO
2=5 MINUTES
3=10 MINUTES
```

Auto Silence Screen #1

```
  AUTO SILENCE
1=15 MINUTES
2=20 MINUTES
3=25 MINUTES
```

Auto Silence Screen #2

```
  AUTO SILENCE
1=30 MINUTES
```

Auto Silence Screen #3

To disable the Auto Silence feature, press *1* for *No* while viewing Auto Silence Screen #1. To enable the Auto Silence feature, press the number corresponding to the time delay which will elapse before Auto Silence activates. This information will be stored in memory and the display will return to NAC Screen #2.

NOTE: All silenceable control modules as well as the remote power supply sync will be controlled by the Auto Silence timer for NAC 1.

■ Coding (only for NACs not programmed as Sync Strobe Type)

The Coding feature allows the programmer to select the type of output that the main circuit board notification appliances will generate when activated. Pressing *2* while viewing NAC Screen #2 will cause the following displays to appear:

```
    CODING
1=STEADY
2=MARCH TIME
3=CALIFORNIA
```

Coding Screen #1

```
    CODING
1=TEMPORAL 3
2=TEMPORAL 3
3=TWO STAGE 3 MIN
```

Coding Screen #2

```
    CODING
1=TWO STAGE 5 MIN
```

Coding Screen #3

The programmer can select the notification appliance output by pressing the number corresponding to the desired output. The coding selections are:

- Steady - a continuous output with no coding
- March Time - 120 ppm (pulse-per-minute) output
- California - 10 seconds on and 5 seconds off
- Temporal 3 - ½ Second On, ½ Second Off, ½ Second On, ½ Second Off, ½ Second On, 1½ Seconds Off
- Temporal 4 - ½ Second On, ½ Second Off, ½ Second On, ½ Second Off, ½ Second On, ½ Second Off, ½ Second On, 1½ Seconds Off
- Two Stage - refer to, "Two Stage Operation" below for a description

Selection of one of the above options will cause the control panel to store the information in memory and return the display to NAC Screen #2, which will display the new coding choice.

Two Stage Operation

Two Stage operation consists of the following:

- 1st stage output - 20 ppm (pulse-per-minute) coding
- 2nd stage output - Temporal coding as described above
- F2 button functions as the automatic alarm signal cancel button
- F3 button functions as the two stage advance to second stage button

NOTE: Two-stage operation cannot be used at the same time as in-suite silence feature.

If Two Stage operation is programmed as the Coding option, the following sequence of events will occur during an alarm.

1. The onboard NACs which are programmed to General Alarm Zone 000 will activate with a 1st stage output upon activation of any alarm point.
2. If the activated alarm point is directly mapped to a zone which is programmed to an onboard NAC, that NAC will go directly to 2nd stage coding output. All other NACs not directly mapped to the activated alarm point's zone but assigned to Zone 0 will activate with a 1st stage output.
3. If, after the programmed time of 3 or 5 minutes, the Acknowledge switch has <u>not</u> been pressed, all NACs presently in 1st stage activation will go to 2nd stage activation.

4. Any NACs currently in 1st stage activation will remain in 1st stage. Pressing the Acknowledge switch does not affect NACs already in 2nd stage activation.
5. If an F3 button in pressed, the NACs will progress to the second stage.
6. If another alarm point is activated and the countdown timer is counting, the alarm point will have no effect on the NACs unless the alarm point's zones are directly mapped to one of the NACs, in which case it will follow the procedure outlined in step 2.
7. If another alarm point is activated and the countdown timer has stopped counting due to the Acknowledge switch being pressed, the countdown timer will restart and the NACs will respond as outlined in step 2. NACs already in 2nd stage activation will not be affected.
8. Any control modules assigned to special Zone 255 will be activated either by direct mapping of an input device programmed to Zone 255 or if the timer counts down to zero or when any NAC goes into 2nd stage coding.
9. Control modules that are programmed to the same zone as the activated input device will not be delayed for activation.

■ Zone Assignment

```
  NAC #
1=ZONE ASSIGNMENT
 000 *** *** *** ***
2=SILENC INHIBIT NO
```

NAC Screen #3

A maximum of five zones can be programmed to each main circuit board NAC. Pressing *1* while viewing NAC Screen #3 displays the following screen:

```
  ZONE ASSIGNMENT
Z000 *** *** *** ***
```

Zone Screen

Note that Z*** represents the Zone Number(s) corresponding to the selected NAC. The factory default for an unprogrammed device is Z000 for general alarm zone. A flashing cursor will appear on the first *0* to the left. Enter the two digit number corresponding to the zone that is to be assigned to this NAC. The cursor moves to the next Z*** designation. Continue entering zone assignments or the remaining zones can be left blank or programmed as general alarm zone Z000. When all desired changes have been made, press the Enter key to store the zone assignments. The display will return to the NAC Screen #3 which will show the zone assignments just entered.

■ Silence Inhibit

```
  NAC #
1=ZONE ASSIGNMENT
 000 *** *** *** ***
2=SIL. INHIBIT     NO
```

NAC Screen #3

The Silence Inhibit feature, when enabled, prevents the silencing of the selected main circuit board NAC for a period of five minutes. Resetting the FACP will also be prevented for one minute while the NAC programmed for silence inhibit is activated. Pressing *2* while viewing NAC Screen #3 will cause the display to change from the factory default of *Silence Inhibit No* to *Silence Inhibit Yes*. Each press of the *2* key will cause the display to toggle between the two options. If the panel is set to *Canadian* mode of operation, the duration for Silence Inhibit is programmable from 0-300 seconds. Pressing *2* while viewing NAC Screen #3 in Canadian mode only, will display the following:

```
 NAC SILENCE INHIBIT

RANGE 0-300 SECONDS
***
```

NAC Silence Inhibit Screen

A flashing cursor will appear in the lower left corner of the display. Type the three digit in suite silence delay in seconds (000 to 300 second delay). The default time is 300 seconds. When the third digit is entered, the display will return to the NAC Screen #3 which will indicate the new Silence Inhibit time.

■ Sync Type

```
  NAC #
1=SYNC TYPE        S
2=MNS OVERRIDE    NO
3=MNS ACTIVE      NO
```

NAC Screen #4

If synchronized strobes were selected as the Type of device installed, the type of synchronization must be selected in this option. Pressing *1* while viewing NAC Screen #4 will cause the following screen to be displayed:

```
    NAC SYNC TYPE
1=SYSTEM SENSOR
2=WHEELOCK
3=GENTEX
```

Pressing *1* while viewing this screen will select System Sensor synchronization, *2* will select Wheelock, and *3* will select Gentex.

Maximum Number of Strobes for Synchronization

The total current draw for each Notification Appliance Circuit cannot exceed 3.0 amps. Refer to the manufacturer's documentation supplied with the Strobes to determine the maximum current draw for each strobe and ensure that the circuit maximum is not exceeded. To ensure proper strobe and circuit operation, there is also a limit to the number of strobes that can be attached to each circuit.

■ MNS Override

This feature is not available at this time.

■ MNS Active

This feature is not available at this time.

Relays

```
SYSTEM SETUP
1=TIMERS
2=NAC
3=RELAYS
```

System Setup Screen #2

Pressing *3* while viewing System Setup Screen #2 will allow the programmer to configure two main circuit board Form-C relays from the following screen:

```
RELAYS
1=RELAY 1
2=RELAY 2
3=RELAY 3
```

Relays Selection Screen

To program Relay 1 or Relay 3, press the number corresponding to the selected relay. Note that Relay 2 is fixed as a Trouble relay. Selecting Relay 2 will have no effect on its programming. The following screen will appear for each programmable relay:

```
RELAY #
1=TYPE
          ALARM
```

Relay Type Screen

Pressing *1* for Type while viewing the Relay Screen will cause the following screens to be displayed:

```
RELAY
1=ALARM
2=SUPERVISORY
3=SUPERVISORY AR
```

Relay Screen #1

```
RELAY
1=TROUBLE
2=COMM FAIL
3=PROCESS MON
```

Relay Screen #2

```
RELAY
1=PROCESS MON AR
2=AC LOSS
3=HAZARD
```

Relay Screen #3

```
RELAY
1=MEDICAL
2=SILENCEABLE ALARM
3=CARBON MONOXIDE
```

Relay Screen #4

While viewing the selected screen, press the number corresponding to the desired relay type to program the main circuit board relay. The choice will be stored in memory and the display will return to the Relay Type Screen which will show the programmed type choice. Press the Escape key to return to the Relays Selection Screen and repeat the preceding procedure for the remaining relays.

NOTE:
1. *AR (AutoResettable)* in *SUPERVISORY AR* and *PROCMON AR* means that a relay with the Supervisory and/or Process Monitor type code, when activated, will automatically reset when the corresponding condition is cleared.
2. A relay programmed with the Silenceable Alarm type will activate upon any alarm and deactivate when the FACP Alarm Silenced LED is illuminated.

Canadian Option

Pressing *1* while viewing System Setup Screen #3 will configure the FACP to comply with Canadian requirements. The display will change to *Canadian Opt. On*. Each press of the *1* key will cause the display to toggle between *Canadian Opt. On* and *Canadian Opt. Off*.:

```
SYSTEM SETUP
1=CANADIAN OPT.  OFF
2=WATERFLOW SIL.  NO
3=MNS OVERRIDE    NO
```

Important! *For Canadian Applications, this option must be set to ON prior to any other panel programming.*

The Canadian Options configures the FACP with the following as required by Canada:

- The following monitor module type codes are **not** available:
  - ✓ monitor
  - ✓ non-latching drill
  - ✓ non-latching process monitor
  - ✓ process monitor
  - ✓ hazard
  - ✓ tornado
  - ✓ medical alert
- The following features become available:
  - ✓ Sounder Base Auto Silence
  - ✓ Control Module Auto Silence
  - ✓ Special Zone 251 CO Active
  - ✓ Special Zone 250 In Suite Silence
  - ✓ Control Module Auto Silence Timer
  - ✓ In Suite Silence Timer
  - ✓ In Suite Resound Timer
  - ✓ Programmable NAC Silence Inhibit
  - ✓ ANN-Bus annunciator keys enable
- Control modules are no longer associated with the auto silence setting for NAC 1.

- Addressable ionization smoke detector sensitivity is automatically monitored using Canadian specifications.
- The Positive Alarm Sequence and Pre-Signal option are not available for Canadian applications.
- The F1 function key is automatically configured to perform a manual alarm signal activation when pressed.
- The F2 function key is automatically configured to perform an automatic alarm signal cancel in two-stage NAC operation when pressed. This prevents the NAC from advancing to the second-stage alarm.
- The F3 function key is automatically configured to force active two-stage NACs into the second (alarm) stage.
- If NACs are set up for two-stage operation, the Silence Inhibit timer is automatically enabled and is fixed at 5 minutes.
- AlarmNet supervision settings for Ethernet communications are fixed at 3 minutes and cannot be changed regardless of programming selection.

Waterflow Silenceable

```
   SYSTEM SETUP
1=CANADIAN OPT. OFF
2=WATERFLOW SIL. NO
3=MNS OVERRIDE   NO
```

System Setup Screen #3

Pressing *2* while viewing System Setup Screen #3 will allow the programmer to configure the system for silenceable on non-silenceable waterflow circuits. Each press of the *2* key will toggle the display between *Waterflow Sil. No* and *Waterflow Sil. Yes*. When *Waterflow Sil. No* is selected, all output devices associated with a waterflow type input device, will be non-silenceable. When *Waterflow Sil. Yes* is selected, all output devices associated with a waterflow type input device, will be silenceable.

MNS Override

This feature is not available at this time.

Auxiliary Power

```
   SYSTEM SETUP
1=AUX POWER
2=TROUBLE REM   24HR
3=LANGUAGE   ENGLISH
```

System Setup Screen #4

Three Special Application 24 VDC power outputs are available at TB11, TB18, and TB13 on the upper right corner of the main circuit board. Pressing *3* while viewing System Setup Screen #4 displays the following:

```
    AUX POWER
1=AUX 1
2=AUX 2
3=AUX 3
```

Select the desired output. The following screen will be displayed.

```
        AUX#
1=CLASS A          YES
2=RESETTABLE       YES
```

Only Aux 1 can be programmed for Class A wiring. If Aux 1 is to be wired for Class A, press *1*. Each press of the *1* key will cause the display to toggle between *Class A Yes* and *Class A No.*

Each output can be programmed as resettable or non-resettable power. Non-resettable power is suitable for powering annunciators while resettable power is suitable for powering smoke detectors. Each press of the *2* key will cause the display to toggle between *Resettable Yes* and *Resettable No.*

Trouble Reminder

```
   SYSTEM SETUP
1=AUX POWER
2=TROUBLE REM   24HR
3=LANGUAGE   ENGLISH
```

System Setup Screen #4

The Trouble Reminder features causes the control panel piezo to sound a reminder ‘beep’ for alarms and troubles, after the panel has been silenced. Refer to “System Setup” on page 67, for a detailed description of this feature. Pressing *2* while viewing System Setup Screen #4 will cause the display to toggle to *Trouble Rem 4* or *Trouble Rem 24*, which enables this feature for resound at either 4 or 24 hours, respectively. Refer to the table on page 43 for permissible settings.

Language

The language option is used to change the text on the panel display to either English or French. Pressing the *3* key will cause the display to offer a choice of *1=English* and *2=French.*

4XTMF Supervision

```
   SYSTEM SETUP
1=4XTM SPV ENAB   NO
2=REM SYNC ENAB  YES
3=NOT USED     **
```

System Setup Screen #5

If a 4XTMF Transmitter Module is installed in the system, supervision must enabled in user programming. Pressing *2* while viewing System Setup Screen #5 will cause the display to toggle to *4XTM Supv Enab. Yes*, which means there is a 4XTMF installed. Each press of the *2* key will cause the display to toggle between *4XTM Supv Enab. No* and *4XTM Supv Enab. Yes*. Refer to the table on page 43 for permissible settings.

Remote Sync Enable

Synchronization is a feature that controls the activation of notification appliances in such a way that all devices will turn on and off at exactly the same time. Refer to Section 2.5, “Remote Synchronization Output”, on page 26 for more information. To enable remote synchronization, press the *3* key while viewing System Setup Screen #5. Each press of the key will toggle the screen between *Rem Sync Enab Yes* and *Rem Sync Enab No*.

Charger Enable

```
  SYSTEM SETUP
1=CHARGER ENAB   YES
2=BAT SIZE 18-26  AH
3=NOT USED    *
```

System Setup Screen #6

When using an external battery charger, the FACP battery charger must first be disabled. Pressing *1* while viewing System Setup Screen #5 will cause the display to toggle to *Charger Enab No*, which will allow the use of an external battery charger. Each press of the *1* key will cause the display to toggle between *Charger Enab Yes* and *Charger Enab No*.

Battery Size

The panel needs to be programmed to recognize the size of the battery in the system. The FACP cabinet can house two 26 Amp Hour batteries. Batteries larger than 26 Amp Hour require a separate battery box. The minimum battery size for the ES-1000X panel is 18 Amp Hour. Choose the corresponding number for the value of the battery in the system. Refer to Section 9.4 to determine system battery requirements.

```
 BATTERY SELECTION
1=18-26   AMP HOUR
2=33-55   AMP HOUR
```

3.5.6 History

```
   PROGRAMMING
1=HISTORY
2=COMMUNICATOR
3=ANNUNCIATORS
```

Programming Screen #3

The History option allows an authorized user to view or erase events which have occurred in the control panel. Pressing *1* while viewing Programming Screen #3 will display the History options as shown in the following display:

```
     HISTORY
1=VIEW EVENTS
2=ERASE HISTORY
```

History Screen

View Events

```
  HISTORY
1=VIEW EVENTS
2=ERASE HISTORY
```

History Screen

Pressing *1* while viewing the History Screen will allow the user to select the events to be viewed as illustrated in the following:

```
     HISTORY
1=VIEW ALL
2=VIEW ALARMS
3=VIEW OTHER EVENTS
```

View Events Screen

While displaying the View Events screen, press *1* to view all events, *2* to view only alarms or *3* to view other events. Use the up and down arrow keys to scroll through all of the displayed events.

Erase History

The Erase History option allows a user to erase all events from the history file. This will provide a clean slate in order to use the history file to track future events. Pressing *2* while viewing the History Screen will display the following screen:

```
   ERASE HISTORY
     PROCEED ?
1=YES          2=NO
```

Erase History Screen

Pressing *1* while viewing the Erase History Screen will erase all events from the History file. During this process, the display will read as follows:

```
 ERASING HISTORY
  PLEASE WAIT
```

Erase History Wait Screen

After the History file has been erased, the display will return to the History Screen.

3.5.7 Communicator

```
   PROGRAMMING
1=HISTORY
2=COMMUNICATOR
3=ANNUNCIATORS
```

Programming Screen #3

The communicator settings allow the user to configure the settings for the optional IPOTS-COM and CELL-MOD/CELL-CAB-FL if installed in the system. Pressing *2* while viewing the Programming Screen #3 will cause the following Communicator options to be displayed:

```
   COMMUNICATOR
1=INSTALLED      NO
2=POTS SETTINGS
3=IP SETTINGS
```

Communicator Screen #1

```
   COMMUNICATOR
1=PRI COMM PATH
2=SEC COMM PATH
3=TBL REPORT LIMIT 0
```

Communicator Screen #2

```
   COMMUNICATOR
1=REPORT SYTLE POINT
2=EVENT CODES
```

Communicator Screen #3

Communicator Installed

The pre-installed communicator provides communication to a central station. The ES-1000XI model does not come with a pre-installed communicator. Use of the communicator requires it be enabled in user programming. Pressing *1* while viewing the Communicator Screen #1 will change the display to *Installed Yes*. Each press of the *1* key will cause the display to toggle between *Installed Yes* and *Installed No.*

POTS Settings

```
   COMMUNICATOR
1=INSTALLED      YES
2=POTS SETTINGS
3=IP SETTINGS
```

Communicator Screen #1

The POTS settings configure the system when telephone lines are used to contact central station. Pressing *2* while viewing the Communicator Screen #1 will display the following.

```
   POTS SETTINGS
1=LINE 1
2=LINE 2
3=GAINS
```

POTS Settings Screen

■ POTS Line (X)

If telephone lines are connected to the IPOTS-COM board at J4 (Line 1) and J5 (Line 2), their settings can be configured by pressing *1* or *2*, respectively. Pressing *1* or *2* will display the following screen. The programming options for Line 1 and Line 2 are identical.

```
   POTS LINE X
1=ENABLED        NO
2=TYPE     TOUCHTONE
3=SUPERVISED     NO
```

POTS Line X Screen

Phone Line (X) Enable

To enable the phone line, press *1* while viewing the POTS Line (X) Screen #1 to change the display to *Enabled Yes*. Each press of the *1* key will cause the display to toggle between *Enabled Yes* and *Enabled No.*

Type

```
   POTS LINE X
1=ENABLED        YES
2=TYPE
3=SUPERVISED     YES
```

POTS Line X Screen

To select the type, press *2* while viewing the POTS Line (X) Screen #1. The following screen will be displayed:

```
TYPE
1=TOUCHTONE
2=ROTARY 67/33
3=ROTARY 60/40
```

Type Settings Screen

Press *1* to select Touchtone dialing, *2* to select Rotary dialing with a make/break ratio of 67/33 or *3* to select Rotary dialing with a make/break ratio of 60/40.

Supervised Phone Line

```
   POTS LINE X
1=ENABLED        YES
2=TYPE
3=SUPERVISED     YES
```

POTS Line X Screen

The Supervised Phone Line feature allows the user to disable the supervision of Phone Lines when using an alternate means of secondary transmission path. The factory default setting is Phone Line (X) supervised. Supervision must be set to *Yes* if the selected transmission path is POTS.

Pressing *1* for *Supervision* while viewing the POTS Line (X) Screen #2 will change the screen to read *Supervision No*. Each press of the *1* key while viewing this screen will toggle the option between *Supervise Yes* and *No*. Refer to the table on page 43 for permissible settings.

■ Gains

```
   POTS SETTINGS
1=LINE 1
2=LINE 2
3=GAINS
```

POTS Settings Screen

The Gains value is the telephone's transmitting "volume control". To adjust the settings, press *3* while viewing the POTS Settings screen. The following screen will be displayed:

```
        GAINS
1=DIALING          NORM
2=REPORTING        NORM
```

Gains Screen

The Gains value can be adjusted for when the telephones lines are in use for Dialing and Reporting. Press *1* or *2* to change these values, respectively. The following screen will display for both options.

```
        GAINS
1=LOW
2=NORMAL
3=HIGH
```

Gains Screen

Press *1* for *Low*, *2* for *Normal*, and *3* for *High*. After the Gains value has been selected, the display will return to the Gains Screen.

IP Settings

```
   COMMUNICATOR
1=INSTALLED        YES
2=POTS SETTINGS
3=IP SETTINGS
```

Communicator Screen #1

The IP settings configure the system when the central station will be contacted over the internet. The following screens allow the user to enter the device addresses needed for communication. Pressing *3* while viewing the Communicator Screen #1 will display the following.

```
     IP SETTINGS
1=DHCP ENABLED    NO ⇩
2=STATIC SETTINGS
3=ENTER PIN
```

IP Settings Screen #1

```
     IP SETTINGS
1=ETHERNET FAULT 01 ⇧

MAC CRC          C3F0
```

IP Settings Screen #2

■ DHCP Enabled

If the internet router used by the IPOTS-COM is configured for DHCP (Dynamic Host Configuration Protocol) where addresses are automatically assigned, press *1* while viewing the IP Settings Screen to change the display to *Enabled Yes*. Each press of the *1* key will cause the display to toggle between *Enabled Yes* and *Enabled No.* If the DHCP is enabled, the Static Settings option will disappear since there is no need to enter addresses manually.

■ Static Settings

```
     IP SETTINGS
1=DHCP ENABLED    NO
2=STATIC SETTINGS
3=ENTER PIN
```

IP Settings Screen

The Static Settings are used to set the addresses manually <u>if the DHCP is not enabled</u>. Press *2* on the IP Settings Screen. The following screens will display:

```
STATIC SETTINGS
DEVICE IP ADDRESS ⇩
XXX.XXX.XXX.XXX
```

Device IP Address Screen

```
STATIC SETTINGS
SUBNET MASK ⇕
XXX.XXX.XXX.XXX
```

Subnet Mask Screen

```
STATIC SETTINGS
GATEWAY IP ADDRESS ⇕
XXX.XXX.XXX.XXX
```

Gateway IP Address Screen

```
STATIC SETTINGS
PREFERRED DNS ⇧
XXX.XXX.XXX.XXX
```

Preferred DNS Screen

The A flashing cursor will appear on the first *X* to the left. Enter the twelve digit address. When the address has been entered, press the Enter key to store the address number. The display will return to the IP Settings Screen.

■ PIN

```
     IP SETTINGS
1=DHCP ENABLED    NO
2=STATIC SETTINGS
3=ENTER PIN
```

IP Settings Screen

In the event that the communicator needs to be replaced, the device will need to be re-registered with AlarmNet. AlarmNet will issue a PIN to be entered into the panel for verification. Pressing 3 on the IP Settings screen will display the following.

```
IP SETTINGS
ENTER 4 DIGIT
PIN NUMBER
****
```

PIN Number Screen

Enter the 4 digit PIN provided by AlarmNet and press Enter. The display will indicate that it is sending the PIN to AlarmNet for verification.

■ Ethernet Fault

```
    IP SETTINGS
1=ETHERNET FAULT   01

MAC CRC          C3F0
```

IP Settings Screen #2

The Ethernet Fault Time is the duration of the communication loss between the FACP and the ethernet infrastructure.

Pressing *1* on the IP Settings Screen #2 will display the following:

```
ETHERNET FAULT TIME

RANGE 1-60 MINUTES
**
```

Ethernet Fault Time Screen

Select the number of minutes allowed, 1-60, before a fault is shown on the panel.

Primary and Secondary Communication Paths

```
   COMMUNICATOR
1=PRI COMM PATH
2=SEC COMM PATH
3=TBL CALL LIMIT   0
```

Communicator Screen #1

The Primary and Secondary Communication Path screens are used to configure the methods (primary and backup) for reporting to central station. Pressing *1* for *Pri* or *2* for *Sec* will display the following screens.

Note that the following information must be entered for both the Primary and Secondary Communication Paths.

```
   XXX COMM PATH
1=POTS
2=ETHERNET
```

XXX Comm Path Screen

■ POTS

```
  XXX COMM PATH
1=POTS
2=ETHERNET
```

Comm Path Screen #1

To configure the communication method to contact central station as a telephone line, select *1* for *POTS*. The following screens will display.

```
POTS XXX COMM PATH
1=ENABLED          NO
2=ACCT CODE   000000
```

POTS (XXX) Path Screen #1

```
POTS XXX COMM PATH
1=PHONE NUMBER
```

POTS (XXX) Path Screen #2

```
POTS XXX COMM PATH
1=COMM FORMAT
   ADEMCO CONTACT ID
```

POTS (XXX) Path Screen #3

```
POTS XXX COMM PATH
1=TEST TIME INT   24
2=24HR TEST TIME
                 0100
```

POTS (XXX) Path Screen #4

Enable

```
  POTS XXX COMM PATH
1=ENABLED          NO
2=ACCT CODE   000000
```

POTS Comm Path Screen #1

To enable the phone line, press *1* while viewing the POTS Line (X) Screen #1 to change the display to *Enabled Yes*. Each press of the *1* key will cause the display to toggle between *Enabled Yes* and *Enabled No*.

NOTE: For UL applications: when POTS is used as the primary communication path, the use of POTS as the secondary transmission path is only allowed with approval of the local AHJ.
For ULC applications: when POTS is used as the primary transmission path, alarm signals will be sent out on both the primary and secondary transmission paths.

Account Code

Pressing *3* while viewing POTS (XXX) Path Screen #1 will cause the following screen to be displayed:

```
   ACCOUNT CODE

ENTER 6 DIGITS
******
```

Account Codes Screen

The Account Code, which is assigned by a Central Station, depends on the communication format being used. The Account Code screen will have a flashing cursor in the lower left corner. Enter the supplied account code using 0 - 9 and A- F keys.

Phone Number

```
 POTS XXX COMM PATH
1=PHONE NUMBER
```

POTS Comm Path Screen #2

Pressing *2* while viewing POTS XXX Path Screen #2 will cause the following screen to be displayed:

```
   PHONE NUMBER

 20 NUMBERS MAXIMUM
```

Phone Numbers Screen

The Phone Number screen is used to enter the Central Station phone number that the Communicator will be contacting. A maximum of 20 characters can be entered with valid entries being 0 - 9 and A - C where A = *, B = # and C = 2 seconds pause.

A flashing cursor will appear in the lower left corner of the screen. Enter the first digit then press the right arrow key to move the cursor to the right one position. Enter the second digit and repeat the process until all digits are entered. Press the *Enter* key to store the phone number in memory.

Communication Format

```
 POTS XXX COMM PATH
1=COMM FORMAT
  ADEMCO CONTACT ID
```

POTS Comm Path Screen #3

Pressing *1* while viewing Primary/Secondary Screen #3 will cause the following screen to be displayed:

```
   COMM FORMAT
1=ADEMCO CONTACT ID
2=SIA 8
3=SIA 20
```

The Communication Format is determined by the type of receiver that the Communicator is transmitting to. *Consult your Central Station for proper selection or consult our factory representatives. For any format chosen, the control panel automatically programs all of the event codes.*

Select the Communication Format by pressing the corresponding number key while viewing the Comm Format screen. The following table describes each format:

Screen Selection	Communication Format Description
ADEMCO CONTACT ID	Contact ID, DTMF, 1400/2300 ACK
SIA 8	Security Industry Association, 8 messages per call
SIA 20	Security Industry Association, 20 messages per call

Table 3.2 Communication Formats

Test Time Interval

The test report sent to the Central Station phone number may be sent once every 1, 2, 3, 4, 6, 8, 12, or 24 hours. Pressing *1* while viewing POTS (XXX) Comm Path #4 will toggle the available settings. Refer to the table on page 43 for permissible settings.

24 Hour Test Time

```
 POTS XXX COMM PATH
1=TEST TIME INT    24
2=24HR TEST TIME 0100
```

POTS Comm Path Screen #4

Pressing *2* while viewing POTS (XXX) Comm Path #4 will cause the following screen to be displayed:

```
 24 HOUR TEST TIME

RANGE 0000-2359
****
```

24 Hour Test Time Screen

Use the 24 Hour Test Time screen to program the time that the Communicator will transmit the 24 Hour Test to the Central Station. A flashing cursor will appear in the lower left corner of the screen. Enter a four digit number representing the test time using military time (0000 = midnight and 2359 = 11:59PM). Setting the 24 Hour Test Time on either path sets the time for both paths. However, the secondary path will send out a test 15 minutes after the primary path.

■ Ethernet

```
  XXX COMM PATH
1=POTS
2=ETHERNET
```

Comm Path Screen #1

To configure the communication method to contact central station as an ethernet connection, select *2* for *Ethernet*. The following screens will display.

```
 ETHERNET OPTIONS ⇩
1=ENABLED        NO
2=CS ACCOUNT
```

Ethernet Options Screen #1

```
 ETHERNET OPTIONS ⇧
1=SUPV. SETTINGS
NFPA 2013 DUAL PATH
```

Ethernet Options Screen #2

Enable

To enable the Ethernet connection, press *1* while viewing the Ethernet Options Screen #1 to change the display to *Enabled Yes*. Each press of the *1* key will cause the display to toggle between *Enabled Yes* and *Enabled No.*

Central Station Account

```
 ETHERNET OPTIONS
1=ENABLED        NO
2=CS ACCOUNT
```

Ethernet Options Screen #1

Press 2 on Ethernet Options Screen #1 to display the following:

```
 CS ACCOUNT
1=CITY ID        0000
2=CS ID          0000
3=ACC CODE     000000
```

24 Hour Test Time Screen

Enter the *City ID*, *Central Station ID*, and *Account Code* all provided by the monitoring station.

Supervision Settings

```
  ETHERNET OPTIONS
1=SUPV. SETTINGS
NFPA 2013 DUAL PATH
```

Ethernet Options Screen #2

Pressing *1* while viewing Ethernet Options Screen #2 will cause the display to toggle between the 4 supervision setting options. Toggle to select *NFPA 2010 Sole Path*, *NFPA 2010 Dual Path*, *NFPA 2013 Sole Path*, or *NFPA 2013 Dual Path*. Refer to the table on page 43 for permissible settings.

The Supervision Interval is the time from the check-in at AlarmNet to the FACP. Select *Sole Path* when only Ethernet is used.

- NFPA 2010 Dual Path: Supervision Interval: 24 Hours *(future use)*
- NFPA 2010 Sole Path: Supervision Interval: 5 min
- NFPA 2013 Dual Path: Supervision Interval: 6 Hours *(future use)*
- NFPA 2013 Sole Path: Supervision Interval: 1 Hour

Trouble Report Limit (Dialer Runaway Prevention)

```
  COMMUNICATOR
1=PRI COMM PATH
2=SEC COMM PATH
3=TBL REPRT LIMIT  0
```

Communicator Screen #2

The Report Limit option limits the number of Communicator trouble calls to the Central Station, to a programmed amount between 0 and 99, for each unique trouble within a 24 hour period. Separate limit counters keep track of each unique type of trouble. Note that the number of phone line (communication) faults called to the Central Station are not limited by this feature. No subsequent restoral message is sent to the Central Station(s) for a particular trouble whose call limit has been reached. Local communicator annunciation will still track the particular trouble and restoral.

To set the Trouble Report Limit, press *3* while viewing Communicator Screen #1. The following screen will be displayed.

```
TROUBLE CALL LIMIT

RANGE 00-99
**
```

Trouble Report Limit Screen

Enter a value between 00 and 99, then press Enter to set the Report Limit to this value. Refer to the table on page 43 for permissible settings.

NOTE: Entering a value of 00 will disable the Trouble Report Limit, allowing the Communicator to call the Central Station an unlimited number of times.

Report Style

```
  COMMUNICATOR
1=REPORT STYLE POINT
2=EVENT CODES
```

Communicator Screen #3

Pressing *1* while viewing Communicator Screen #3 will cause the Report Style display to toggle between *Point* and *Zone*. Setting the Report Style to Point will program the Communicator to report individual point status to the Central Station. The control panel is capable of monitoring a total of 318 addressable devices. Setting the Report Style to Zone will program the Communicator to report zone status to the Central Station. The control panel is capable of monitoring a total of 256 individual zones.

NOTE:
1. Detector Address 001 will be reported to the Central Station as Point 001, Detector Address 002 as Point 002, with reports continuing in a similar fashion all the way up to Detector Address 159 which will be reported as Point 159.
2. Module Address 001 will be reported to the Central Station as Point 160, Module Address 002 will be reported to the Central Station as Point 161, with reports continuing in a similar fashion all the way up to Module Address 318 which will be reported as Point 318.

Event Codes

```
  COMMUNICATOR
1=REPORT STYLE POINT
2=EVENT CODES
```

Communicator Screen #3

Pressing *2* while viewing the Communicator Screen #3 will cause the following screen to be displayed. Select the desired communication format to update Event Code programming

```
 EVENT CODES
1=ADEMCO CONTACT ID ⇩
2=SIA 8
3=SIA 20
```

Event Code Screen

Pressing the down arrow key allows viewing of all Events associated with the selected Communication Format. See Table 3.3 for a full list.

```
 EVENT CODES
1=PULL STATION      ⇩
2=MON-USER-DEF-1
3=WATERFLOW
```

Event Code Screen

Pressing the number corresponding to the event displayed in each screen will display its default event code which can be customized. For example, pressing *1* for Pull Station will display the following screen which allows the Event Code to be changed from the default value.

```
PULL STATION
ALARM          000
```

Event Code Screen

The tables on the following pages list all of the Events and their default Event Codes for the various Communication Formats.

The information shown in Table 3.3 is automatically programmed for the Central Station phone number Event Codes when the Ademco Contact ID or SIA Format is selected. Enter *0s* for an Event Code Setting to disable the report. Disabled reports will not get called to the Central Station. The programmer may enable the Event Types in programming as described on the previous page.

Event Description	Ademco Contact ID			SIA	
	Active	Zone	Point	Active	Restoral
PULL STATION	115	Zone	Point	FA	FH
MON-USER-DEF-1	115	Zone	Point	FA	FH
WATERFLOW	113	Zone	Point	SA	SH
MON-USER-DEF-2	113	Zone	Point	SA	SH
SMOKE (PHOTO)	111	Zone	Point	FA	FH
DET-USER-DEF-1	111	Zone	Point	FA	FH
SMOKE (ION)	111	Zone	Point	FA	FH
DET-USER-DEF-2	111	Zone	Point	FA	FH
HEAT DETECTOR	114	Zone	Point	KA	KH
DET-USER-DEF-3	114	Zone	Point	KA	KH
HIGH HEAT	114	Zone	Point	KA	KH
USER DEF 15	114	Zone	Point	KA	KH
SMOKE DUCT-P	116	Zone	Point	FA	FH
DET-USER-DEF-4	116	Zone	Point	FA	FH
PHOTO W/HEAT	111	Zone	Point	FA	FH
DET-USER-DEF-5	111	Zone	Point	FA	FH
CO ALARM	162	Zone	Point	GA	GH
DET-USER-DEF-6	200	Zone	Point	FS	FV
PHOTO SUPERISORY	200	Zone	Point	FS	FV
USER DEF 14	200	Zone	Point	FS	FV
DUCT SUPERVISORY	200	Zone	Point	FS	FV
DET-USER-DEF-7	200	Zone	Point	FS	FV
PHOTO SUPER AR	200	Zone	Point	FS	FV
DET-USER-DEF-8	111	Zone	Point	FA	FH
CO SUPERVISORY	200	Zone	Point	GS	GV
DET-USER-DEF-9	111	Zone	Point	FA	FH
PHOTO ADAPT	111	Zone	Point	FA	FH
DET-USER-DEF-10	111	Zone	Point	FA	FH
PHOTO BEAM	111	Zone	Point	FA	FH
DET-USER-DEF-11	111	Zone	Point	FA	FH
MONITOR	110	Zone	Point	FA	FH
MON-USER-DEF-3	110	Zone	Point	FA	FH
SMOKE CONVEN	111	Zone	Point	FA	FH
MON-USER-DEF-5	111	Zone	Point	FA	FH
HEAT CONVENTIONAL	114	Zone	Point	KA	KH
MON-USER-DEF-6	114	Zone	Point	KA	KH
MEDIC ALERT	100	Zone	Point	MA	MH
MON-USER-DEF-7	100	Zone	Point	MA	MH
HAZARD ALERT	150	Zone	Point	PA	PH
MON-USER-DEF-8	150	Zone	Point	PA	PH
TORNADO ALRT	150	Zone	Point	PA	PH
MON-USER-DEF-9	150	Zone	Point	PA	PH
TAMPER	144	Zone	Point	TA	TH
MON-USER-DEF-11	144	Zone	Point	TA	TH
MON SUPERVISORY	200	Zone	Point	FS	FV

Table 3.3 Event Codes

MON-USER-DEF-12	200	Zone	Point	FS	FV
MON SUPERV AUTO	200	Zone	Point	FS	FV
MON-USER-DEF-13	200	Zone	Point	FS	FV
HVAC OVRRIDE	200	Zone	Point	FS	FV
POWER MON	330	Zone	Point	AT	AR
MON-USER-DEF-14	330	Zone	Point	AT	AR
TROUBLE MON	POINT_FAULT code will **always** be transmitted				
MON-USER-DEF-15	POINT_FAULT code will **always** be transmitted				
PROCESS MON	000	Zone	Point	00	00
MON-USER-DEF-16	000	Zone	Point	00	00
PROC MON AR	000	Zone	Point	00	00
MON-USER-DEF-17	000	Zone	Point	00	00
POINT FAULT	380	Zone	Point	FT	FJ
POINT DISABLE	570	Zone	Point	FB	FU
MANUAL EVACUATION	110	000	000		
AC_FAIL	301	000	000	AT	AR
DRILL	604	000	000	FI	FK
SLC 1 SHORT A	372	000	000	ET	ER
SLC 1 SHORT B	372	000	000	ET	ER
SLC 1 OPEN POS	371	000	000	ET	ER
SLC 1 OPEN NEG	371	000	000	ET	ER
SLC 1 GND FAULT POS	310	000	000	ET	ER
SLC 1 GND FAULT NEG	310	000	000	ET	ER
SLC 1 COMM FAULT	330	000	000	EM	EN
SLC 1 INSTALLED FAULT	370	000	000	EM	EN
SLC 2 SHORT A	372	000	000	ET	ER
SLC 2 SHORT B	372	000	000	ET	ER
SLC 2 OPEN POS	371	000	000	ET	ER
SLC 2 OPEN NEG	371	000	000	ET	ER
SLC 2 GND FAULT POS	310	000	000	ET	ER
SLC 2 GND FAULT NEG	310	000	000	ET	ER
SLC 2 COMM FAULT	330	000	000	EM	EN
SLC 2 INSTALLED FAULT	370	000	000	EM	EN
SLC 3 SHORT A	372	000	000	ET	ER
SLC 3 SHORT B	372	000	000	ET	ER
SLC 3 OPEN POS	371	000	000	ET	ER
SLC 3 OPEN NEG	371	000	000	ET	ER
SLC 3 GND FAULT POS	310	000	000	ET	ER
SLC 3 GND FAULT NEG	310	000	000	ET	ER
SLC 3 COMM FAULT	330	000	000	EM	EN
SLC 3 INSTALLED FAULT	370	000	000	EM	EN
PASSWORD FAULT	000	000	000	00	00
EARTH FAULT DISABLE	300	000	000	YP	YQ
GROUND FAULT	310	000	000	ET	ER
LOW BATTERY	302	000	000	YT	YR
NO_BATTERY	311	000	000	YT	YR
TELCO LINE 1	351	000	000	LT	LR
TELCO LINE 2	352	000	000	LT	LR
COMM FAULT 1	354	001	001	YC	YK
COMM FAULT 2	354	002	002	YC	YK
TOTAL COMM FAULT	000	N/A	N/A	00	00

Table 3.3 Event Codes (Continued)

CCP UPDATE FAULT	000	000	000	00	00
ETHERNET FAULT	350	000	000	YS	YK
PRINTER FAULT	336	000	000	VT	VR
NAC 1 FAULT	321	001	001	YA	YR
NAC 2 FAULT	322	002	002	YA	YR
NAC 3 FAULT	326	003	003	YA	YR
NAC 4 FAULT	327	004	004	YA	YR
24 VDC FAULT	300	000	000	YP	YQ
VOICE EVAC FAULT	330	000	000	ET	ER
ACS FAULT	333	000	000	EM	EN
LCD-80F FAULT	330	000	000	EM	EN
PRI ANN-BUS FAULT	333	000	000	ET	ER
SEC ANN-BUS FAULT	333	000	000	ET	ER
PRI ANN CLASS A	333	000	000	ET	ER
REMOTE SYNC DIS	520	000	000	ET	ER
NAC 1 DISABLE	521	001	001	ET	ER
NAC 2 DISABLE	522	002	002	ET	ER
NAC 3 DISABLE	526	003	003	ET	ER
NAC 4 DISABLE	527	004	004	ET	ER
MEMORY FAULT	304	000	000	YF	00
CHARGER FAULT	300	000	000	YP	YQ
OPTION CARD 1 FAULT	331	000	000	ET	ER
REMOTE SYNC FAULT	300	000	000	OU	OV
ZONE DISABLE	570	000	000	FB	FU
AUX 1 CLASS A FAULT	300	000	000	YP	YQ
ANN-BUS COMM FAULT	333	000	000	ET	ER
DISPLAY COMM FAULT	300	000	000	ET	ER
PIN REQUIRED	000	000	000	00	00
NO_DEVICES_INSTLLD	380	000	000	ET	ER
OFF_NORMAL_MESSAGE	308	000	000	LB	LX
24 HOUR TEST PRI	602/603[1]	000	000	RP	
24 HOUR TEST SEC	602/603[1]	000	000	RP	
24 HOUR ABNORMAL PRI	608	000	000	RY	
24 HOUR ABNORMAL SEC	608	000	000	RY	
UPDOWN REQUEST	411	000	000	RB	
UPLOAD SUCCESS	416	000	000	RS	
DOWNLOAD SUCCESS	412	000	000	RS	
UPDOWN FAILURE	413	000	000	RR	
GENERAL ALARM	000	000	000	00	00
GENERAL SUPERVISORY	000	000	000	00	00

Table 3.3 Event Codes (Continued)

1 If POTS is set as the communication path, the event code will default to 602. If Ethernet is selected for the communication path, the event code will default to 603. These values can be edited, but if the communication path is changed, the values will return to their default value.

3.5.8 Annunciators

```
PROGRAMMING
1=HISTORY
2=COMMUNICATOR
3=ANNUNCIATORS
```

Programming Screen #3

Pressing *3* while viewing Programming Screen #3 will cause the control panel to display the following screens:

```
ANN-BUS SELECT
1=PRIMARY
2=SECONDARY
3=ANN-BUS OPTIONS
```

A printer module, graphic annunciator module, LCD annunciator module, LED annunciator module, and relay module can be programmed into the ES-1000X system. These devices communicate with the FACP over the ANN-BUS terminals on the control panel.

ANN-BUS Setup

```
 ANN-BUS SELECT
1=PRIMARY
2=SECONDARY
3=ANN-BUS OPTIONS
```

Annunciators Screen #1

Two ANN-BUS circuits are available on the ES-1000X. Press *1* to configure the Primary ANN-BUS or press *2* to configure the Secondary ANN-BUS. The following screens will be displayed for either ANN-BUS circuit where *(XXX)* indicates either *Primary* or *Secondary*..

```
    ANN XXX
1=ENABLED        NO
2=MODULES INSTALLED
3=AUTO-CONFIGURE
```

ANN-BUS Screen #1

```
    ANN XXX
1=CLASS A        NO
```

ANN-BUS Screen #2

■ ANN-BUS Enabled

The ANN-BUS must be enabled if any modules are connected to the ANN-BUS terminals. To enable the ANN-BUS, press *1* while viewing ANN-BUS screen #1 so that the display reads *ANN XXX Enabled Yes.* Each press of the *1* key will cause the display to toggle between *ANN XXX Enabled Yes* and *ANN XXX Enabled No*.

■ Modules Installed

```
   ANN XXX
1=ENABLED        NO
2=MODULES INSTALLED
3=AUTO-CONFIGURE
```

ANN XXX Screen #1

If an ANN-BUS module is installed, press *2* for *Modules Installed* to select ANN-BUS addresses for the module(s). The only difference between the two programming screens are the addresses. The Primary Bus module addresses will have a prefix of “1-” while the Secondary Bus module addresses will have a prefix of “2-”. The following screen will be displayed for either bus circuit.

```
  ANN-BUS MODULES
1=ADDR. X-1     NONE
2=ADDR. X-2     NONE
3=ADDR. X-3     NONE
```

ANN-BUS Modules Screen #1

Pressing the down arrow key will allow the programmer to view additional screens displaying Addresses 1-8. To select one or more addresses for the installed module(s), press the number key corresponding to the module address in each screen. The following screen will be displayed for each address:

```
  ANN-BUS MODULE X-1
ANN-BUS ADDRESS
1=TYPE          NONE
```

ANN-BUS Address Screen

Pressing *1* for *Type* will display the following screens:

```
 ANN-BUS MODULE TYPE
1=NOT INSTALLED
2=ANN-80 MODULE
3=ANN-100 MODULE
```

Module Type Screen #1

```
 ANN-BUS MODULE TYPE
1=ANN-I/O MODULE
2=ANN-S/PG MODULE
3=ANN-LED MODULE
```

Module Type Screen #2

```
 ANN-BUS MODULE TYPE
1=ANN-RLY MODULE
2=ANN-ACC
2=ANN-ECC
```

Module Type Screen #3

Press the number corresponding to the module/device type that is installed with the selected address.

NOTE: If the module type selected is the *ANN-80, ANN-100, ANN-S/PG,* or if *Not Installed* is selected, the ANN-BUS Address Screen shown on the previous page will be displayed following the module selection. The options selected for each of these modules will be the same for all modules of the same type (refer to “ANN-S/PG (Print) Options” on page 94 and “ANN-80/100 Options” on page 95).

If ANN-I/O, ANN-LED, or ANN-RLY is the selected module type, the following ANN-BUS Address Screen will be displayed:

```
  ANN-BUS MODULE X-1
ANN-BUS ADDRESS
1=TYPE          ANN-I/O
2=MODULE OPTIONS
```

ANN-BUS Address Screen

Since the options for each of these module types can be individually set, pressing *2* for *Module Options*, while viewing the ANN-BUS Address Screen will display the available options as described below.

ANN-I/O Options

Pressing *2* for Module Options while viewing ANN-BUS Address screen when the ANN-I/O option is selected will display the following screen:

```
ANN-I/O - ADDR X-1
SLC 1 DET 001-030
ACTIVE LEDS ONLY
```

ANN-I/O Address Screen #1

```
ANN-I/O - ADDR X-1
1=POINT/ZONE  POINT
```

ANN-I/O Address Screen #2

```
ANN-I/O - ADDR X-1
1=RANGE   PT001-030
2=DET/MOD        DET
3=SLC LOOP #       1
```

ANN-I/O Address Screen #3

The first screen indicates that the ANN-I/O at ANN-BUS address 1 is programmed to annunciate SLC Loop #1 addressable Detectors with addresses 1 through 30. The programming can be changed using ANN-I/O Address Screens 2 and 3.

Pressing *1* while viewing ANN-I/O Address Screen #2 will program the annunciator module to annunciate either Point (addressable device address) information or Zone information.

Pressing *1* while viewing ANN-I/O Address Screen #3 will select the Point or Zone range to be annunciated (refer to the tables in “ANN-I/O Zone Option” on page 88 and “ANN-I/O Point Option” on page 89).

Pressing *2* while viewing ANN-I/O Address Screen #3 will select either addressable detectors or addressable modules to be annunciated.

Pressing *3* while viewing ANN-I/O Address Screen #3 will select the SLC Loop with the addressable devices to be annunciated.

ANN-I/O Zone Option

If *Zone* is selected as the module option, the first ten LEDs on the first ANN-I/O module will display the system status information. The remaining 30 LEDs on the first module and 40 LEDs on the remaining modules will display the active/alarm status of each zone in the Zone Range programmed for that particular module. The LED assignments for each ANN-I/O module will be as follows.

Module LED	ANN-I/O Module #1 Function	ANN-I/O Module #2 Function	ANN-I/O Module #3 Function	ANN-I/O Module #4 Function	ANN-I/O Module #5 Function	ANN-I/O Module #6 Function	ANN-I/O Module #7 Function
1	AC Fault	Zone 30	Zone 70	Zone 110	Zone 150	Zone 190	Zone 230
2	Fire Alarm	Zone 31	Zone 71	Zone 111	Zone 151	Zone 191	Zone 231
3	Supervisory	Zone 032	Zone 072	Zone 112	Zone 152	Zone 192	Zone 232
4	Trouble	Zone 033	Zone 073	Zone 113	Zone 153	Zone 193	Zone 233
5	Alarm Silenced	Zone 034	Zone 074	Zone 114	Zone 154	Zone 194	Zone 234
6	Earth Fault	Zone 035	Zone 075	Zone 115	Zone 155	Zone 195	Zone 235
7	Battery Fault	Zone 036	Zone 076	Zone 116	Zone 156	Zone 196	Zone 236
8	Charger Fault	Zone 037	Zone 077	Zone 117	Zone 157	Zone 197	Zone 237
9	NAC Fault	Zone 038	Zone 078	Zone 118	Zone 158	Zone 198	Zone 238
10	Disabled	Zone 039	Zone 079	Zone 119	Zone 159	Zone 199	Zone 239
11	Zone 000	Zone 040	Zone 080	Zone 120	Zone 160	Zone 200	Zone 240
12	Zone 001	Zone 041	Zone 081	Zone 121	Zone 161	Zone 201	Zone 241
13	Zone 002	Zone 042	Zone 082	Zone 122	Zone 162	Zone 202	Zone 242
14	Zone 003	Zone 043	Zone 083	Zone 123	Zone 163	Zone 203	Zone 243
15	Zone 004	Zone 044	Zone 084	Zone 124	Zone 164	Zone 204	Zone 244
16	Zone 005	Zone 045	Zone 085	Zone 125	Zone 165	Zone 204	Zone 245
17	Zone 006	Zone 046	Zone 086	Zone 126	Zone 166	Zone 205	Zone 246
18	Zone 007	Zone 047	Zone 087	Zone 127	Zone 167	Zone 206	Zone 247
19	Zone 008	Zone 048	Zone 088	Zone 128	Zone 168	Zone 207	Zone 248
20	Zone 009	Zone 049	Zone 089	Zone 129	Zone 169	Zone 208	Zone 249
21	Zone 010	Zone 050	Zone 090	Zone 130	Zone 170	Zone 210	Zone 250
22	Zone 011	Zone 051	Zone 091	Zone 131	Zone 171	Zone 211	Zone 251
23	Zone 012	Zone 052	Zone 092	Zone 132	Zone 172	Zone 212	Zone 252
24	Zone 013	Zone 053	Zone 093	Zone 133	Zone 173	Zone 213	Zone 253
25	Zone 014	Zone 054	Zone 094	Zone 134	Zone 174	Zone 214	Zone 254
26	Zone 015	Zone 055	Zone 095	Zone 135	Zone 175	Zone 215	Zone 255
27	Zone 016	Zone 056	Zone 096	Zone 136	Zone 176	Zone 216	Not Used
28	Zone 017	Zone 057	Zone 097	Zone 137	Zone 177	Zone 217	Not Used
29	Zone 018	Zone 058	Zone 098	Zone 138	Zone 178	Zone 218	Not Used
30	Zone 019	Zone 059	Zone 099	Zone 139	Zone 179	Zone 219	Not Used
31	Zone 020	Zone 060	Zone 100	Zone 140	Zone 180	Zone 220	Not Used

32	Zone 021	Zone 061	Zone 101	Zone 141	Zone 181	Zone 221	Not Used
33	Zone 022	Zone 062	Zone 102	Zone 142	Zone 182	Zone 222	Not Used
34	Zone 023	Zone 063	Zone 103	Zone 143	Zone 183	Zone 223	Not Used
35	Zone 024	Zone 064	Zone 104	Zone 144	Zone 184	Zone 224	Not Used
36	Zone 025	Zone 065	Zone 105	Zone 145	Zone 185	Zone 225	Not Used
37	Zone 026	Zone 066	Zone 106	Zone 146	Zone 186	Zone 226	Not Used
38	Zone 027	Zone 067	Zone 107	Zone 147	Zone 187	Zone 227	Not Used
39	Zone 028	Zone 068	Zone 108	Zone 148	Zone 188	Zone 228	Not Used
40	Zone 029	Zone 069	Zone 109	Zone 149	Zone 189	Zone 229	Not Used

ANN-I/O Point Option

If *Point* is selected as the module option, the first ten LEDs on the first ANN-I/O module will display the system status information. The remaining 30 LEDs on the first module and 40 LEDs on each additional module will display the active/alarm status of each point in the Point Range programmed for that particular module. The points that will be annunciated on a particular ANN-I/O module depend on the programming options selected as far as SLC Loop and the device type (detector or module) to be annunciated. The LED assignments for each ANN-I/O module will be as follows.

Module LED	ANN-I/O Module #1 Function	ANN-I/O Module #2 Function	ANN-I/O Module #3 Function	ANN-I/O Module #4 Function	ANN-I/O Module #5 Function
1	AC Fault	Point 031	Point 071	Point 111	Point 151
2	Fire Alarm	Point 032	Point 072	Point 112	Point 152
3	Supervisory	Point 033	Point 073	Point 113	Point 153
4	Trouble	Point 034	Point 074	Point 114	Point 154
5	Alarm Silenced	Point 035	Point 075	Point 115	Point 155
6	Earth Fault	Point 036	Point 076	Point 116	Point 156
7	Battery Fault	Point 037	Point 077	Point 117	Point 157
8	Charger Fault	Point 038	Point 078	Point 118	Point 158
9	NAC Fault	Point 039	Point 079	Point 119	Point 159
10	Disabled	Point 040	Point 080	Point 120	Not Used
11	Point 001	Point 041	Point 081	Point 121	Not Used
12	Point 002	Point 042	Point 082	Point 122	Not Used
13	Point 003	Point 043	Point 083	Point 123	Not Used
14	Point 004	Point 044	Point 084	Point 124	Not Used
15	Point 005	Point 045	Point 085	Point 125	Not Used
16	Point 006	Point 046	Point 086	Point 126	Not Used
17	Point 007	Point 047	Point 087	Point 127	Not Used
18	Point 008	Point 048	Point 088	Point 128	Not Used
19	Point 009	Point 049	Point 089	Point 129	Not Used
20	Point 010	Point 050	Point 090	Point 130	Not Used
21	Point 011	Point 051	Point 091	Point 131	Not Used
22	Point 012	Point 052	Point 092	Point 132	Not Used
23	Point 013	Point 053	Point 093	Point 133	Not Used
24	Point 014	Point 054	Point 094	Point 134	Not Used
25	Point 015	Point 055	Point 095	Point 135	Not Used
26	Point 016	Point 056	Point 096	Point 136	Not Used
27	Point 017	Point 057	Point 097	Point 137	Not Used
28	Point 018	Point 058	Point 098	Point 138	Not Used
29	Point 019	Point 059	Point 099	Point 139	Not Used
30	Point 020	Point 060	Point 100	Point 140	Not Used
31	Point 021	Point 061	Point 101	Point 141	Not Used
32	Point 022	Point 062	Point 102	Point 142	Not Used
33	Point 023	Point 063	Point 103	Point 143	Not Used
34	Point 024	Point 064	Point 104	Point 144	Not Used
35	Point 025	Point 065	Point 105	Point 145	Not Used

36	Point 026	Point 066	Point 106	Point 146	Not Used
37	Point 027	Point 067	Point 107	Point 147	Not Used
38	Point 028	Point 068	Point 108	Point 148	Not Used
39	Point 029	Point 069	Point 109	Point 149	Not Used
40	Point 300	Point 070	Point 110	Point 150	Not Used

ANN-LED Options

```
  ANN XXX
1=ENABLED        YES
2=MODULES INSTALLED
3=AUTO-CONFIGURE
```

ANN XXX Screen #2

Pressing *2* for Module Options while viewing the (XXX) ANN-BUS Address Screen when the ANN-LED option is selected, will display the following screen:

```
ANN-LED - ADDR X-1 ⇩

SLC 1 DET 001-010
ALARM, TBL, SUPV
```

ANN-LED Address Screen #1

```
ANN-LED - ADDR X-1 ⇩⇧
1=POINT/ZONE   POINT
2=ALARM/ATS    ATS
```

ANN-LED Address Screen #2

```
ANN-LED - ADDR X-1 ⇧
1=RANGE   PT001-010
2=DET/MOD       DET
3=SLC LOOP #      1
```

ANN-LED Address Screen #3

The first screen indicates that the ANN-LED at the selected ANN-BUS address is programmed to annunciate Alarms, Supervisories, and Troubles for SLC Loop #1 addressable Detectors with addresses 1 through 10. The programming can be changed using ANN-LED Address Screens 2 and 3.

Pressing *1* while viewing ANN-LED Address Screen #2 will program the annunciator module to annunciate either Point (addressable device address) information or Zone information.

Pressing *2* while viewing ANN-LED Address Screen #2 will program the annunciator module to annunciate only Alarms for addressable device addresses 1-30 or Alarms, Supervisories, and Troubles for addressable device addresses 1-10.

Pressing *1* while viewing ANN-LED Address Screen #3 will select the Point or Zone range to be annunciated - refer to the tables in “ANN-LED Zone Option - Alarm Only (for use with ANN-RLED module)” on page 90 and “ANN-LED Point Option - Alarm Only (for use with ANN-RLED module)” on page 91.

Pressing *2* while viewing ANN-LED Address Screen #3 will select either addressable detectors or addressable modules to be annunciated.

Pressing *3* while viewing ANN-LED Address Screen #3 will select the SLC loop with the addressable devices to be annunciated.

ANN-LED Zone Option - Alarm Only (for use with ANN-RLED module)

If *Zone* is selected as the module option, and the module is programmed to annunciate **alarms only**, the first ten LEDs on the first ANN-LED module will display the system status information. The remaining 30 LEDs on the first module and the last 30 LEDs on the remaining modules will display the active/alarm status of each zone in the Zone Range programmed for that particular module. The LED assignments for each ANN-LED module will be as follows.

Alarm Silenced	NAC 1 Fault	NAC 2 Fault	NAC 3 Fault	NAC 4 Fault
Earth Fault	Battery Fault	Charger Fault	Disabled	Maintenance
Zone 000 Active/Alarm	Zone 001 Active/Alarm	Zone 002 Active/Alarm	Zone 003 Active/Alarm	Zone 004 Active/Alarm
Zone 005 Active/Alarm	Zone 006 Active/Alarm	Zone 007 Active/Alarm	Zone 008 Active/Alarm	Zone 009 Active/Alarm
Zone 010 Active/Alarm	Zone 011 Active/Alarm	Zone 012 Active/Alarm	Zone 013 Active/Alarm	Zone 014 Active/Alarm
Zone 015 Active/Alarm	Zone 016 Active/Alarm	Zone 017 Active/Alarm	Zone 018 Active Alarm	Zone 019 Active/Alarm
Zone 020 Active/Alarm	Zone 021 Active/Alarm	Zone 022 Active/Alarm	Zone 023 Active/Alarm	Zone 024 Active/Alarm
Zone 025 Active/Alarm	Zone 026 Active/Alarm	Zone 027 Active/Alarm	Zone 028 Active/Alarm	Zone 029 Active/Alarm

Table 3.4 ANN-RLED Module #1

Not Used	Not Used	Not Used	Not Used	Not Used
Not Used	Not Used	Not Used	Not Used	Not Used
Zone 030 Active/Alarm	Zone 031 Active/Alarm	Zone 032 Active/Alarm	Zone 033 Active/Alarm	Zone 034 Active/Alarm
Zone 035 Active/Alarm	Zone 036 Active/Alarm	Zone 037 Active/Alarm	Zone 038 Active/Alarm	Zone 039 Active/Alarm
Zone 040 Active/Alarm	Zone 041 Active/Alarm	Zone 042 Active/Alarm	Zone 043 Active/Alarm	Zone 044 Active/Alarm
Zone 045 Active/Alarm	Zone 046 Active/Alarm	Zone 047 Active/Alarm	Zone 048 Active Alarm	Zone 049 Active/Alarm

Table 3.5 ANN-RLED Module #2

Zone 050 Active/Alarm	Zone 051 Active/Alarm	Zone 052 Active/Alarm	Zone 053 Active/Alarm	Zone 054 Active/Alarm
Zone 055 Active/Alarm	Zone 056 Active/Alarm	Zone 057 Active/Alarm	Zone 058 Active/Alarm	Zone 059 Active/Alarm

Table 3.5 ANN-RLED Module #2

The LED assignments for the modules annunciating Zone Ranges 060-089, 090-119, 120-149, 150-179, 180-209, 210-239, and 240-255 will follow the same pattern as the second ANN-RLED module.

ANN-LED Zone Option - Alarm, Trouble and Supervisory

If *Zone* is selected as the module option, and the module is programmed to annunciate **alarms, troubles and supervisories**, the first ten LEDs on the first ANN-LED module will display the system status information. The remaining 30 LEDs on the first module and the last 30 LEDs on the remaining modules will display the alarm, trouble and supervisory status for each of the ten zones in the Zone Range programmed for that particular module. The LED assignments for each ANN-LED module will be as follows.

Alarm Silenced	NAC 1 Fault	NAC 2 Fault	NAC 3 Fault	NAC 4 Fault
Earth Fault	Battery Fault	Charger Fault	Disabled	Maintenance
Zone 000 Active/Alarm	Zone 001 Active/Alarm	Zone 002 Active/Alarm	Zone 003 Active/Alarm	Zone 004 Active/Alarm
Zone 000 Trouble	Zone 001 Trouble	Zone 002 Trouble	Zone 003 Trouble	Zone 004 Trouble
Zone 000 Supervisory	Zone 001 Supervisory	Zone 002 Supervisory	Zone 003 Supervisory	Zone 004 Supervisory
Zone 005 Active/Alarm	Zone 006 Active/Alarm	Zone 007 Active/Alarm	Zone 008 Active Alarm	Zone 009 Active/Alarm
Zone 005 Trouble	Zone 006 Trouble	Zone 007 Trouble	Zone 008 Trouble	Zone 009 Trouble
Zone 005 Supervisory	Zone 006 Supervisory	Zone 007 Supervisory	Zone 008 Supervisory	Zone 009 Supervisory

Table 3.6 ANN-LED Module #1

Not Used	Not Used	Not Used	Not Used	Not Used
Not Used	Not Used	Not Used	Not Used	Not Used
Zone 010 Active/Alarm	Zone 011 Active/Alarm	Zone 012 Active/Alarm	Zone 013 Active/Alarm	Zone 014 Active/Alarm
Zone 010 Trouble	Zone 011 Trouble	Zone 012 Trouble	Zone 013 Trouble	Zone 014 Trouble
Zone 010 Supervisory	Zone 011 Supervisory	Zone 012 Supervisory	Zone 013 Supervisory	Zone 014 Supervisory
Zone 015 Active/Alarm	Zone 016 Active/Alarm	Zone 017 Active/Alarm	Zone 018 Active/Alarm	Zone 019 Active/Alarm
Zone 015 Trouble	Zone 016 Trouble	Zone 017 Trouble	Zone 018 Trouble	Zone 019 Trouble
Zone 015 Supervisory	Zone 016 Supervisory	Zone 017 Supervisory	Zone 018 Supervisory	Zone 019 Supervisory

Table 3.7 ANN-LED Module #2

The LED assignments for the modules annunciating Zone Ranges 020-029, 030-039, 040-049, 050-059, 060-069, 070-079, 080-089, 090-099, 100-109, 110-119, 120-129, 130-139, 140-149, 150-159, 160-169, 170-179, 180-189, 190-199, 200-209, 210-219, 220-229, 230-239, 240-249, 250-255, will follow the same pattern as the second ANN-LED module.

ANN-LED Point Option - Alarm Only (for use with ANN-RLED module)

If *Point* is selected as the module option and the module is programmed to annunciate **alarms** only, the first ten LEDs on the first ANN-LED module will display the system status information. The remaining 30 LEDs on the first module and the last 30 LEDs on each additional module will display the active/alarm status of each point in the Point Range programmed for that particular module. The points that will be annunciated on a particular ANN-LED module depend on the programming options selected as far as which SLC loop and the device type (detector or module) to be annunciated. The LED assignments for each ANN-LED module will be as follows.

Alarm Silenced	NAC 1 Fault	NAC 2 Fault	NAC 3 Fault	NAC 4 Fault
Earth Fault	Battery Fault	Charger Fault	Disabled	Maintenance
Point 001 Active/Alarm	Point 002 Active/Alarm	Point 003 Active/Alarm	Point 004 Active/Alarm	Point 005 Active/Alarm
Point 006 Active/Alarm	Point 007 Active/Alarm	Point 008 Active/Alarm	Point 009 Active/Alarm	Point 010 Active/Alarm

Table 3.8 ANN-RLED Module #1 (Point Range 001 - 030)

Point 011 Active/Alarm	Point 012 Active/Alarm	Point 013 Active/Alarm	Point 014 Active/Alarm	Point 015 Active/Alarm
Point 016 Active/Alarm	Point 017 Active/Alarm	Point 018 Active/Alarm	Point 019 Active/Alarm	Point 020 Active/Alarm
Point 021 Active/Alarm	Point 022 Active/Alarm	Point 023 Active/Alarm	Point 024 Active/Alarm	Point 025 Active/Alarm
Point 026 Active/Alarm	Point 027 Active/Alarm	Point 028 Active/Alarm	Point 029 Active/Alarm	Point 030 Active/Alarm

Table 3.8 ANN-RLED Module #1 (Point Range 001 - 030)

Not Used	Not Used	Not Used	Not Used	Not Used
Not Used	Not Used	Not Used	Not Used	Not Used
Point 031 Active/Alarm	Point 032 Active/Alarm	Point 033 Active/Alarm	Point 034 Active/Alarm	Point 035 Active/Alarm
Point 036 Active/Alarm	Point 037 Active/Alarm	Point 038 Active/Alarm	Point 039 Active/Alarm	Point 040 Active/Alarm
Point 041 Active/Alarm	Point 042 Active/Alarm	Point 043 Active/Alarm	Point 044 Active/Alarm	Point 045 Active/Alarm
Point 046 Active/Alarm	Point 047 Active/Alarm	Point 048 Active/Alarm	Point 049 Active/Alarm	Point 050 Active/Alarm
Point 051 Active/Alarm	Point 052 Active/Alarm	Point 053 Active/Alarm	Point 064 Active/Alarm	Point 055 Active/Alarm
Point 056 Active/Alarm	Point 057 Active/Alarm	Point 058 Active/Alarm	Point 059 Active/Alarm	Point 060 Active/Alarm

Table 3.9 ANN-RLED Module #2 (Point Range 031 - 060)

The LED assignments for the modules annunciating Point Ranges 061-090, 091-120, 121-150, and 151-159 will follow the same pattern as the second ANN-RLED module.

ANN-LED Point Option - Alarm, Trouble and Supervisory

If *Point* is selected as the module option, and the module is programmed to annunciate **alarms, troubles and supervisories**, the first ten LEDs on the first ANN-LED module will display the system status information. The remaining 30 LEDs on the first module and the last 30 LEDs on the remaining modules will display the alarm, trouble and supervisory status for each of the ten zones in the Point Range programmed for that particular module. The LED assignments for each ANN-LED module will be as follows.

Alarm Silenced	NAC 1 Fault	NAC 2 Fault	NAC 3 Fault	NAC 4 Fault
Earth Fault	Battery Fault	Charger Fault	Disabled	Maintenance
Point 001 Active/Alarm	Point 002 Active/Alarm	Point 003 Active/Alarm	Point 004 Active/Alarm	Point 005 Active/Alarm
Point 001 Trouble	Point 002 Trouble	Point 003 Trouble	Point 004 Trouble	Point 005 Trouble
Point 001 Supervisory	Point 002 Supervisory	Point 003 Supervisory	Point 004 Supervisory	Point 005 Supervisory
Point 006 Active/Alarm	Point 007 Active/Alarm	Point 008 Active/Alarm	Point 009 Active/Alarm	Point 010 Active/Alarm
Point 006 Trouble	Point 007 Trouble	Point 008 Trouble	Point 009 Trouble	Point 010 Trouble
Point 006 Supervisory	Point 007 Supervisory	Point 008 Supervisory	Point 009 Supervisory	Point 010 Supervisory

Table 3.10 ANN-LED Module #1 (Point Range 001 - 010)

Not Used	Not Used	Not Used	Not Used	Not Used
Not Used	Not Used	Not Used	Not Used	Not Used
Point 011 Active/Alarm	Point 012 Active/Alarm	Point 013 Active/Alarm	Point 014 Active/Alarm	Point 015 Active/Alarm
Point 011 Trouble	Point 012 Trouble	Point 013 Trouble	Point 014 Trouble	Point 015 Trouble
Point 011 Supervisory	Point 012 Supervisory	Point 013 Supervisory	Point 014 Supervisory	Point 015 Supervisory

Table 3.11 ANN-LED Module #2 (Point Range 011 - 020)

Point 016 Active/Alarm	Point 017 Active/Alarm	Point 018 Active/Alarm	Point 019 Active/Alarm	Point 020 Active/Alarm
Point 016 Trouble	Point 017 Trouble	Point 018 Trouble	Point 019 Trouble	Point 020 Trouble
Point 016 Supervisory	Point 017 Supervisory	Point 018 Supervisory	Point 019 Supervisory	Point 020 Supervisory

Table 3.11 ANN-LED Module #2 (Point Range 011 - 020)

The LED assignments for the modules annunciating Point Ranges 021-030, 031-040, 041-050, 051-060, 061-070, 071-080, 081-090, 091-100, 101-110, 111-120, 121-130, 131-140, 141-150 and 151-159 will follow the same pattern as the second ANN-LED Module.

ANN-RLY Options

```
   ANN XXX
1=ENABLED       YES
2=MODULES INSTALLED
3=AUTO-CONFIGURE
```

ANN XXX Screen #2

Pressing *2* for *Module Options* while viewing the ANN-BUS Address Screen when the ANN-RLY option is selected, will cause the following screen to be displayed:

```
ANN-RLY - ADDR. X-1
1=RLY 1      ZONE 000
2=RLY 2      ZONE 001
3=RLY 3      ZONE 002
```

ANN-RLY Options Screen

The ANN-RLY module provides ten Form-C relays which can be programmed for various functions. The initial screen displays Relays 1 through 3. Pressing the down arrow key will display the remaining relays for this module.

To program any of the ANN-RLY relays, while viewing the appropriate ANN-RLY Option screen, press the number key corresponding to the relay to be programmed. Following is a list of the available programming options for each relay:

- Alarm
- Supervisory
- Supervisory AR
- Trouble
- Comm Fail
- Process Mon
- Process Mon AR
- AC Loss
- Hazard
- Medical
- Silenceable Alarm
- Zone Active XXX (where XXX = programmed zone 000 to 255)
- Carbon Monoxide

■ Auto-Configure

```
   XXX ANN-BUS
1=ENABLED       YES
2=MODULES INSTALLED
3=AUTO-CONFIGURE
```

(XXX) ANN-BUS Screen #1

The ANN-BUS Auto-Configure features allows the programmer to quickly bring all installed ANN-BUS modules online on the selected ANN-BUS. The software will search the selected circuit for all ANN-BUS modules and automatically program the device type and address into the system. For the Auto-Configure to work, the selected ANN-BUS must be enabled, the annunciators must be connected/powered, and a unique address must be set on each annunciator. Pressing *3* while viewing ANN-BUS (X) Screen #1 will begin the Auto-Configure process and cause the following screen to be displayed:

```
ANN-BUS
AUTO-CONGFIGURE
IN PROGRESS
PLEASE WAIT
```

Auto-Configure Screen

■ Class A

```
   XXX ANN-BUS
1=CLASS A       NO
```

ANN-BUS (XXX) Screen #2

This option applies to the Primary ANN-BUS only. The primary ANN-BUS can be configured for Class A wiring. If wired in Class A configuration, press *1* on ANN-BUS Primary Screen #2 to select *Class A Yes*. Each press of the *1* key toggles between *Class A No* and *Class A Yes*.

ANN-BUS Options

```
 ANN-BUS SELECT
1=PRIMARY
2=SECONDARY
3=ANN-BUS OPTIONS
```

Annunciator Screen

Three ANN-BUS modules have more programming options. Pressing 3 while viewing the Annunciators screen will display the following.

```
      ANN-BUS
1=ANN-S/PG OPTIONS
2=ANN-LED OPTIONS
3=ANN-80/100 OPTIONS
```

ANN-BUS Options Screen

■ ANN-S/PG (Print) Options

```
  XXX ANN-BUS
1=ANN-S/PG OPTIONS
2=ANN-LED OPTIONS
3=ANN-80/100 OPTIONS
```

ANN-BUS Options Screen

The Print option allows the programmer to configure the optional printer. Pressing *1* while viewing the ANN-BUS screen will display the following screens: Pressing *1* for Port while viewing ANN-S/PG Options screen

```
ANN-S/PG OPTIONS
1=PORT          SER
2=PRINTER SUPV  N/A
3=OFFLINE TIMER N/A
```

ANN-S/PG Options Screen #1

```
ANN-S/PG OPTIONS
1=BAUD RATE    9600
2=DATA BITS       7
3=PARITY        EVEN
```

ANN-S/PG Options Screen #2

```
ANN-S/PG OPTIONS
1=STOP BITS     1.0
```

ANN-S/PG Options Screen #3

#1 will allow the programmer to select between a Parallel and Serial Port for printer connection. Each press of the *1* key will cause the display to toggle between *Port PAR* (parallel) and *Port SER* (serial). It is important to note that the interface selected determines which options are available to the user.

If the Parallel Port option is selected, the user has the option to supervise the printer and select an offline timer for the supervision by pressing *2* for Printer Supervision while viewing Print Options screen #1. Each press of the *2* key will cause the display to toggle between *Printer Supv NO* for no supervision and *Printer Supv YES* for printer supervision. Note that this option is not selectable if the Serial Port option has been selected.

If the Parallel Port option is selected, the user has the ability to select an *Offline Timer* by pressing *3* while viewing Print Options screen #1. The resultant screen allows the programmer to program the *Offline Timer* for a delay of between 0 and 255 seconds before loss of printer supervision is reported as a trouble.

If the Serial Port option is selected, the *Printer Supv* and *Offline Timer* options will not be available. The Baud Rate, Data Bits, Parity and Stop Bits options are only available when the Serial Port option has been selected.

Pressing *1* for *Baud Rate* while viewing ANN-S/PG Options screen #2 will cause a screen to appear which allow the user to select a Baud Rate of *19200, 9600, or 2400*.

Pressing *2* for *Data Bits* while viewing ANN-S/PG Options screen #2 will cause a screen to appear which allows the user to select *7* or *8 Data Bits*.

Pressing *3* for *Parity* while viewing ANN-S/PG Options screen #2 will cause a screen to appear which allows the user to select between *No Parity, Even Parity,* or *Odd Parity*.

Pressing *1* for Stop Bits while viewing ANN-S/PG Options screen #3 will cause a screen to appear which allows the user to select between *1.0* or *2.0 Stop Bits*.

■ ANN-LED Options

```
  XXX ANN-BUS
1=ANN-S/PG OPTIONS
2=ANN-LED OPTIONS
3=ANN-80/100 OPTIONS
```

ANN-BUS Options Screen

This option allows the programmer to configure the optional ANN-LED annunciator. Pressing *2* while viewing the ANN-BUS screen will display the following screens.

```
ANN-LED OPTIONS
1=PIEZO ENABLE    YES
2=LMP TST ENABLE YES
3=SIL BTN ENABLE  NO
```

ANN-LED Options Screen

The *Piezo Enable* option allows the programmer to select whether the piezo sounder on any installed ANN-LED module will ever sound. Pressing *1* while viewing the ANN-LED Options Screen causes the display to toggle between *Piezo Enable Yes* and *Piezo Enable No*.

The Lamp Test Enable (*LMP TST ENABLE*) option allows the programmer to select whether the Lamp Test button on any installed ANN-LED annunciator will function normally or always be ignored. Pressing *2* while viewing the ANN-LED Options Screen causes the display to toggle between *Lmp Tst Enable Yes* (Lamp Test button functions normally) and *Lmp Tst Enable No* (Lamp Test button never functions).

The Silence Button Enable *(SIL BTN ENABLE)* option allows the programmer to select whether the Silence button on any installed ANN-LED annunciator will function normally or always be ignored. Pressing *3* while viewing the ANN-LED Options Screen causes the display to toggle between *Sil Btn Enable Yes* (Silence button functions normally) and *Sil Btn Enable No* (Silence button never functions).

■ ANN-80/100 Options

```
XXX ANN-BUS
1=ANN-S/PG OPTIONS
2=ANN-LED OPTIONS
3=ANN-80/100 OPTIONS
```

ANN-BUS Options Screen

Pressing *3* while viewing the ANN-BUS screen will display the following screen:

```
ANN-80/100 OPTIONS
1=PIEZO ENABLE  YES
2=LOCK ENABLE   YES
3=ACK BTN ENABLE YES
```

ANN-80/100 Options Screen #1

```
ANN-80/100 OPTIONS
1=SIL BTN ENABLE YES
2=RST BTN ENABLE YES
3=DRL BTN ENABLE YES
```

ANN-80/100 Options Screen #2

The *Piezo Enable* option allows the programmer to select whether the piezo sounder on any installed ANN-80 or ANN-100 module will ever sound. Pressing *1* while viewing the ANN-80/100 Options Screen #1 causes the display to toggle between *Piezo Enable Yes* and *Piezo Enable No*.

The *Lock Enable* option allows the programmer to select whether or not any installed ANN-80 or ANN-100 annunciator must be unlocked by its key before any annunciator key presses will function. Pressing *2* while viewing the ANN-80/100 Options Screen #1 causes the display to toggle between *Lock Enable Yes* (annunciator must be unlocked for keys to function) and *Lock Enable No* (lock position is ignored). This option is not available in Canadian applications. Refer to the table on page 43 for permissible settings.

The Acknowledge Button Enable *(ACK BTN ENABLE)* option allows the programmer to select whether the Ack/Step button on any installed ANN-80 or ANN-100 annunciator will function normally or always be ignored. Pressing *3* while viewing the ANN-80/100 Options Screen #1 causes the display to toggle between *Ack Btn Enable Yes* (Ack/Step button functions normally) and *Ack Btn Enable No* (Ack/Step button never functions). In Canadian mode, the FACP cannot be controlled by the ANN-100 so the Reset feature is unavailable. This option is called *STEP ENABLE* in Canadian applications. Enabling the Step feature will allow the user to scroll through events on the screen.

The Silence Button Enable *(SIL BTN ENABLE)* option allows the programmer to select whether the Silence button on any installed ANN-80 or ANN-100 annunciator will function normally or always be ignored. Pressing *1* while viewing the ANN-80/100 Options Screen #2 causes the display to toggle between *Sil Btn Enable Yes* (Silence button functions normally) and *Sil Btn Enable No* (Silence button never functions).

The Reset Button Enable (*RST BTN ENABLE*) option allows the programmer to select whether the Reset button on any installed ANN-80 or ANN-100 annunciator will function normally or always be ignored. Pressing *2* while viewing the ANN-80/100 Options Screen #2 causes the display to toggle between *Rst Btn Enable Yes* (Reset button functions normally) and *Rst Btn Enable No* (Reset button never functions). In Canadian mode, the Reset feature is unavailable. The programming option will change to *LMP BTN ENABLE* in Canadian applications. Pressing *2* while viewing the ANN-80/100 Options Screen #2 causes the display to toggle between *Lmp Btn Enable Yes* (the ANN-100 will perform a local test of all LEDs) and *Lmp Btn Enable No*.

The Drill Button Enable (*DRL BTN ENABLE*) option allows the programmer to select whether the Drill button on any installed ANN-80 or ANN-100 annunciator will function normally or always be ignored. Pressing *3* while viewing the ANN-80/100 Options Screen #2 causes the display to toggle between *Drl Btn Enable Yes* (Drill button functions normally) and *Drl Btn Enable No* (Drill button never functions). In Canadian mode, the Drill feature is unavailable. The programming option will change to *SND BTN ENABLE* in Canadian applications. Pressing *3* while viewing the ANN-80/100 Options Screen #2 causes the display to toggle between *Snd Btn Enable Yes* (the ANN-100 will perform a test of its local sounder by turning it on for 5 seconds) and *Snd Btn Enable No*.

■ Key Control Enable *(Canadian Mode Only)*

```
XXX ANN-BUS
1=KEY CTRL ENABLED
```

ANN-BUS Options Screen #2

The Key Control feature is only available when the FACP is in Canadian mode of operation. Canadian mode usually limits the functionality of annunciators. Enabling key control allows annuciator key presses to be processed normally. To enable the annunciator Key Control, press *1* while viewing ANN-BUS Options screen #2 so that the display reads *Key Ctrl Enabled Y.* Each press of the *1* key will cause the display to toggle between *Key Ctrl Enabled Y* and *Key Ctrl Enabled N*.

3.5.9 Password Change

```
PROGRAMMING
1=PASSWORD CHANGE
2=CLEAR PROGRAM
3=PROGRAM CHECK
```

Programming Screen #4

The user password, which has been assigned by the administrator, can be changed by selecting the Password Change option. Pressing *1* while viewing Programming Screen #4 will cause the following screen to be displayed:

```
MODIFY USER X
ENTER PASSWORDS
USER X: ********
NEW: ********
```

Change Password Screen

Enter the current password and the new password. *Note that the passwords will not be displayed on LCD annunciators.*

The following screen will appear to verify the password change:

```
MODIFY USER X
VERIFY PASSWORD

NEW: ********
```

Re-enter the new password to accept the change. A message will appear showing the password has been successfully changed.

Invalid Password

If a password is entered incorrectly or is not a valid password, the panel will display either of the following messages.

```
MODIFY USER X
USER X PASSWORD
IS INCORRECT
PRESS ENTER OR ESC
```

```
MODIFY USER X
NEW PASSWORD CANNOT
BE ALL THE SAME CHAR
PRESS ENTER OR ESC
```

The programmer may hit the *Escape* or *Enter* key and re-enter the password correctly.

Incorrect Password/Timeout

A user has nine attempts to enter the correct password. If the password is incorrect after the nine attempts, the administrator must wait 30 seconds for another attempt. However, if the password has been forgotten, it will need to be reset by the administrator.

```
INVALID PASSWORD
00 ATTEMPTS
REMAINING
PRESS ENTER OR ESC
```

3.5.10 Clear Program

```
PROGRAMMING
1=PASSWORD CHANGE
2=CLEAR PROGRAM
3=PROGRAM CHECK
```

Programming Screen #4

Pressing *2* while viewing Programming Screen #4, will select the Clear Program option. This will cause the LCD to display the following screen:

```
CLEAR PROGRAM
1=WHOLE SYSTEM
2=ALL POINTS
3=LOOP1
```

Clear Program Screen #1

```
CLEAR PROGRAM
1=LOOP2
2=LOOP3
```

Clear Program Screen #2

Pressing *1*, for Whole System while viewing the Clear Program Screen, will clear all general system programming options and all programmed addressable devices from the nonvolatile memory of the FACP. *This function is useful when the control panel is first installed, prior to autoprogramming. Note that it is necessary to autoprogram after using the Clear Whole System function.*

Pressing *2*, for All Points while viewing the Clear Program Screen, will clear all programming related to the SLC loop and connected addressable devices.

Pressing 3, for Loop1 will clear all devices on this SLC loop.

Pressing *1* on Clear Program Screen #2, will clear all devices on SLC loop2. Pressing *2* on Clear Program Screen #2 will clear all devices on SLC loop3.

Before executing any of the Clear commands listed above, the control panel will provide a warning to the user by prompting with the following display:

```
WARNING!
SYSTEM CHANGE!
PROCEED?
1=YES        2=NO
```

Pressing *1* will cause the control panel to carry out the selected clear option. Pressing *2* will prevent programming from being cleared.

3.5.11 Program Check

```
PROGRAMMING
1=PASSWORD CHANGE
2=CLEAR PROGRAM
3=PROGRAM CHECK
```

Programming Screen #4

The Program Check feature allows the programmer to view the zones which have been programmed to the Notification Appliance Circuits on the control panel but have not been programmed to Initiating Devices as well as other circuits with no input or output correlations. Pressing *3* while viewing Programming Screen #4 will cause the following screen to be displayed:

```
PROGRAM CHECK
1=NACS NO INPUT
2=ZONES NO INPUT
3=ZONES NO OUTPUT
```

Program Check Screen #1

```
PROGRAM CHECK
1=NACS NO INPUT
2=ZONES NO INPUT
3=ZONES NO OUTPUT
```

Program Check Screen #1

Pressing *1* while viewing the Program Check Screen will display an NAC screen similar to the following.

```
NACS NO INPUT
NAC 1
025 031 044 055 067
```

The example above indicates that NAC 1 has been programmed to Zones 025, 031, 044, 055 and 067 but no input devices have been programmed to any of these zones. Use the up and down arrow keys to view all the NAC zones without input assignments for NAC 1, NAC2, NAC 3 and NAC 4.

Pressing *2* while viewing the Program Check Screen #1 will display a screen similar to the following:

```
   ZONES NO INPUT
005 007 009 010 011
1M001
```

The Zone No Input screen allows the programmer to view the zones which have not been programmed to at least one input device (not including general alarm Zone 00). The example in the preceding screen indicates that Zones 005, 007, 009, 010, and 011 have been programmed to an addressable module (control module in this example) with an address of 001 on loop 1 but have not been programmed to any input devices. Use the up and down arrow keys to view all the zones without input assignments.

```
  PROGRAM CHECK
1=NACS NO INPUT
2=ZONES NO INPUT
3=ZONES NO OUTPUT
```

Program Check Screen #1

Pressing *3* while viewing Program Check Screen #1 will cause a screen similar to the following to be displayed:

```
   ZONES NO OUTPUT
005 007 009 010 011
1D001
```

The Zone No Output feature allows the programmer to view the zones which have not been programmed to at least one output device (not including general alarm Zone 000). The example in the preceding screen indicates that Zones 005, 007, 009, 010, and 011 have been programmed to an addressable detector with an address of 001 on loop 1 but have not been programmed to any output devices. Use the up and down arrow keys to view all the zones without output assignments.

3.6 Maintenance Programming Level

To enter the maintenance programming level, an Administrative user must have enabled the User in password setup and granted the User access to programming at the Maintenance level. To access user programming mode at the maintenance level, press the *Enter* key. The LCD will display the following.

```
1=READ STATUS MODE
2=LOGIN
```

Select *2* to login to the panel.

```
   SELECT ACCOUNT
1=ADMINISTRATORS
2=USERS
3=NOT USED
```

Select *2* to login as a User.

```
    SELECT USER
1=USER 1
2=USER 2
3=USER 3
```

Select the appropriate User login ID:

```
LOGIN FOR USER X
ENTER PASSWORD
********
```

Enter the User's ***Maintenance*** level password. The following screen will appear:

```
  MAINTENANCE MENU
1=POINT PROGRAM
2=HISTORY
3=PROGRAM CHECK
```

Note that in the preceding screens, an arrow appears to inform the programmer that additional options can be viewed by pressing the keypad *down* arrow key, as shown in the following screen.

```
   PROGRAMMING
1=WALKTEST
2=SYSTEM
3=ZONE SETUP
```

```
   PROGRAMMING
1=PASSWORD CHANGE
```

3.6.1 Disable Point

```
 PROGRAMMING
1=POINT PROGRAM
2=HISTORY
3=PROGRAM CHECK
```

Maintenance Screen #1

Pressing *1* for Point Program, while viewing Maintenance Screen #1 will cause the following screens to be displayed:

```
POINT PROGRAM. LOOP:
1=LOOP 1
2=LOOP 2
3=LOOP 3
```

Device Select Screen

Select the corresponding number for the loop with the desired point.

```
 POINT PROGRAM
1=DETECTOR
2=MODULE
```

Device Select Screen

Select the device type by pressing *1* for an addressable detector or *2* for an addressable module. The operator will be prompted to enter the three digit device address as shown in the following example for a detector:

```
 EDIT DETECTOR
ENTER POINT ADDRESS
***
```

Address Select Screen

A flashing cursor will appear in the bottom left corner of the display, prompting for the three digit device address. When the third digit is enter, *001* for example, a screen will appear which will allow enabling or disabling of the selected point, as illustrated in the following example:

```
EDIT DETECTOR 1D001
1=ENABLED       YES
```

Enable/Disable Select Screen

Pressing *1* repeatedly will cause the display to toggle between *Enabled Yes* and *Enabled No*.

3.6.2 History

```
 PROGRAMMING
1=POINT PROGRAM
2=HISTORY
3=PROGRAM CHECK
```

Maintenance Screen #1

Pressing *2* while viewing Maintenance Screen #1 will cause the following screen to be displayed:

```
     HISTORY
1=VIEW EVENTS
2=ERASE HISTORY
```

History Screen

The History feature allows the operator to view control panel events which have been stored in a history file in memory and erase the contents of the history file

Pressing *1* while viewing the History screen will cause the following screen to be displayed:

```
     HISTORY
1=VIEW ALL
2=VIEW ALARMS
3=VIEW OTHER EVENTS
```

Events Screen

To view all the events which have occurred in the control panel since the history file was last erased, press *1* while viewing the Events screen. To view only alarms which have occurred, press *2* while viewing the Events screen. To view events other than alarms, press *3*. The most recent event will be displayed on the screen. To view all of the selected events, press the up or down arrow keys to scroll through the list of events. If no events have occurred, the display will read *NO EVENTS IN HISTORY.*

Pressing *2* while viewing the History Screen will cause the following screen to be displayed:

```
  ERASE HISTORY
    PROCEED?
1=YES          2=NO
```

Erase History Screen

Pressing *1* while viewing the Erase History Screen will cause the message *ERASING HISTORY, PLEASE WAIT* to be displayed. The display will then return to the History Screen. Pressing *2* will cause the display to return to the History Screen without erasing the History file.

3.6.3 Program Check

```
   PROGRAMMING
1=POINT PROGRAM
2=HISTORY
3=PROGRAM CHECK
```

Maintenance Screen #1

Pressing *3* while viewing Maintenance Screen #1 will cause the following screen to be displayed:

```
    PROGRAM CHECK
1=NACS NO INPUT
2=ZONES NO INPUT
3=ZONES NO OUTPUT
```

Program Check Screen #1

The Program Check feature allows the programmer to view the zones which have been programmed to the Notification Appliance Circuits on the control panel but have not been programmed to Initiating Devices as well as other circuits with no input or output correlations. Pressing *1* while viewing Program Check screen will cause a screen similar to the following to be displayed.

```
  NACS NO INPUT
NAC 1
025 031 044 055 067
```

The example above indicates that NAC 1 has been programmed to Zones 25, 31, 44, 55 and 67 but no input devices have been programmed to any of these zones. Use the up and down arrow keys to view all the NAC zones without input assignments for both NAC 1, NAC 2, NAC 3 and NAC 4.

Pressing *2* while viewing the Program Check screen will display a screen similar to the following:

```
  ZONES NO INPUT
005 007 009 010 011
1M001
```

The Zone No Input screen allows the programmer to view the zones which have not been programmed to at least one input device (not including general alarm Zone 00). The example in the preceding screen indicates that Zones 05, 07, 09, 10 and 11 have been programmed to an addressable module (control module in this example) with an address of 001 on loop 1 but have not been programmed to any input devices. Use the up and down arrow keys to view all the zones without input assignments.

Pressing *3* while viewing Program Check screen will cause a screen similar to the following to be displayed:

```
  ZONES NO INPUT
005 007 009 010 011
1M001
```

The Zone No Output feature allows the programmer to view the zones which have not been programmed to at least one output device (not including general alarm Zone 00). The example in the preceding screen indicates that Zones 05, 07, 09, 10 and 11 have been programmed to an addressable detector with an address of 001 on loop 1 but have not been programmed to any output devices. Use the up and down arrow keys to view all the zones without output assignments.

3.6.4 Walktest

```
   PROGRAMMING
1=WALKTEST
2=SYSTEM
3=ZONE SETUP
```

Maintenance Screen #2

To perform a walktest, press *1* while viewing Maintenance Screen #2. The following screen will be displayed:

```
     WALKTEST
1=SILENT
2=AUDIBLE
3=VIEW RESULT
```

Walktest Screen

The operator can press *1* to perform a silent walktest or *2* to perform an audible walktest. Pressing *1* or *2* will cause the control panel to enter Walktest Mode and will display the following screen:

```
  UNIT IN WALKTEST
1=VIEW WALKTEST LOG
2=VIEW POINTS
3=VIEW SUMMARY
```

Unit In Walktest Screen

From this screen, it is possible to view the walktest log, untested system points or a summary of the addressable devices tested during the current walktest. The user can select between any of these screens without interrupting the current walktest session. The walktest session will not end until the Unit In Walktest screen is exited by pressing the Escape key to return to the Walktest Screen.

Pressing *1* for *View Walktest Log* while viewing the Unit In Walktest screen will cause a screen similar to one of the following two screens to be displayed:

```
NO EVENTS IN
WALKTEST LOG
```

OR

```
ALARM: MONITOR
   NORTH CLASSROOM
          Z001
10*15A 050417 1M006
```

If there are no events in the current walktest session, the first screen will be displayed, indicating no events have been stored in the walktest log. If any events have been stored, a screen similar to the second will be displayed indicating the latest event. As walktest events occur, the display will change to indicate the latest event. All stored events can be scrolled on the screen by pressing the up or down arrow keys. To return to the first event, press the *1st Event* key.

Pressing *2* for *View Points* while viewing the Unit In Walktest screen will display one of the following screens:

```
NO POINTS IN
   SYSTEM
```

OR

```
UNTESTED POINTS   010
1D001   SMOKE (PHOTO)
********************
NOT TESTED
```

If the system has no points installed, the first screen will be displayed. If points are installed, the second screen will be displayed, which allows the viewing of all untested system points and their status relating to the current walktest session. The up and down arrow keys will allow viewing of all untested points. If a point is tested while it is being displayed, the screen will update and display the next untested point. The first line indicates the total number of untested points. The second line displays information about an untested point. A description on the bottom of the screen will indicate if the displayed point has been disabled, if the Walktest option has been disabled for that point or if the point is not yet tested. The up and down arrow keys allow the user to scroll through all untested points.

Pressing *3* for *View Summary* while viewing the Unit In Walktest screen will display a new screen which will show a total of the tested detectors, tested modules, untested detectors and untested modules for the current walktest session.

To end the Walktest session, press the Escape key to return to the Walktest screen. Pressing *3* for *View Results* while viewing the Walktest screen, after a walktest session has been completed, will allow the operator to view the final results of the most recent walktest.

3.6.5 System

```
 PROGRAMMING
1=WALKTEST
2=SYSTEM
3=ZONE SETUP
```

Maintenance Screen #2

Pressing *2* while viewing Maintenance Screen #2, will display the following screen:

```
    SYSTEM
1=NACS
2=REM SYNC ENAB YES
3=NOT USED     **
```

System Screen #1

```
    SYSTEM
1=TIME/DATE
2=CHARGER ENAB   YES
3=4XTM SPV ENB    NO
```

System Screen #2

```
   SYSTEM
1=NACS
2=REM SYNC ENAB  YES
3=NOT USED   *
```

System Screen #1

Pressing *1* while viewing System Screen #1 will display the following:

```
    ENABLE NACS
1=NAC1   Y  3=NAC3   Y
2=NAC2   Y  4=NAC4   Y
```

Disable NACs Screen

Pressing *1* while viewing NAC Screen #1 will cause the display to change to *NAC1 N*. This will deactivate the devices on the main circuit board's selected NAC output. Each press of the *1* key will cause the display to toggle between *NAC1 N* and *NAC1 Y*. The same action is performed for the other 3 NAC circuits by selecting the number of the desired output circuit.

To enable remote synchronization, press the *2* key while viewing System Screen #1. Each press of the key will toggle the screen between *Rem Sync Enab Yes* and *Rem Sync Enab No*.

```
   SYSTEM
1=TIME/DATE
2=CHARGER ENB     NO
3=4XTM SUPV ENB   NO
```

System Screen #2

Pressing *1* while viewing System Screen #2 will cause the following screen to be displayed:

```
   TIME AND DATE
1=TIME  09:28 AM
2=DATE  12-18-2022
3=CLOCK FORMAT 12HR
```

Time and Date Screen

To change the time, press *1* to display the following screen:

```
    ENTER TIME

09:28 AM
1=AM            2=PM
```

Time Screen

A flashing cursor will appear on the left side of the display. Enter the four digit number corresponding to the time (0000 - 1259). When the fourth digit is entered, the cursor will move one position to the right. Press *1* for AM or *2* for PM to complete entering the time. The display will return to the Time and Date Screen displaying the new time.

To change the date, press *2* while viewing the Time and Date Screen. The following screen will be displayed:

```
ENTER DATE

MONTH DAY YEAR
12-18-22
```

Date Screen

A flashing cursor will appear on the left side of the display. Enter the two digit month, two digit day and two digit year. The cursor will move one position to the right after each entry. When the fourth digit of the year has been entered, the display will return to the Time and Date Screen which will show the new date.

The clock can be configured to display 12 hour (AM & PM) or 24 hour (military) time. Pressing *3* while viewing the Time and Date screen will cause the display to toggle between 12HR and 24HR. Select 12HR for 12 hour display or 24HR for 24 hour display.

NOTE: If the clock is changed to 24 hour (military) format, the date will change to the European standard of **Day-Month-Year** (for display purposes only).

```
SYSTEM
1=TIME/DATE
2=CHARGER ENAB   YES
3=4XTM SPV ENAB   NO
```

System Screen #2

To enable the onboard battery charger, press the *2* key while viewing System Screen #2. Each press of the key will toggle the screen between *Charger Enab Yes* and *Charger Enab No*. The setting must say *Charger Enab No* when an external battery charger is being used.

If a 4XTMF Transmitter Module is installed in the system, supervision must enabled in user programming. Pressing *3* while viewing System Screen #2 will cause the display to toggle to *4XTM Spv Enab. Yes*, which means there is a 4XTMF installed. Each press of the *1* key will cause the display to toggle between *4XTM Spv Enab. No* and *4XTM Spv Enab. Yes*.

3.6.6 Zone Setup

```
PROGRAMMING
1=WALKTEST
2=SYSTEM
3=ZONE SETUP
```

Maintenance Screen #2

Pressing *3* while viewing Maintenance Screen #2 will display the following screen:

```
ZONE SETUP
1=ENABLE
2=DISABLE
```

Zone Setup Screen

Pressing *1* while viewing Zone Setup screen will display the following screen:

```
ZONE TO ENABLE
Z***
```

Enable Screen

A flashing cursor appears to the right of the Z. To enable a zone, enter the three digit zone number (000 - 255). After the third digit is entered, the zone will be enabled and the cursor will return to the original position. The next zone to be enabled can then be entered. Press Esc (Escape) to return to the previous screen.

Pressing *2* while viewing Zone Setup screen will display the following screen:

```
ZONE TO DISABLE
Z***
```

Disable Screen

A flashing cursor appears to the right of the Z. To disable a zone, enter the three digit zone number (000 - 255). After the third digit is entered, the zone will be disabled and the cursor will return to the original position. The next zone to be disabled can then be entered. Press *Esc* (Escape) to return to the previous screen.

Section 4: Operating Instructions

4.1 Panel Control Buttons

4.1.1 Acknowledge

The first press of the *Acknowledge* key silences the piezo sounder, changes flashing LEDs to steady, and also changes the status field on the LCD display from capital letters to small letters. When the piezo is silenced, an *acknowledge* message is sent to the printer and the history file. *Acknowledge* also sends a *silence piezo* command to the optional annunciators connected to the FACP.

When more than one event exists, the first press of the Acknowledge key functions as described in the preceding paragraph. Subsequent pressing of the key *steps* through each off-normal active event, with alarm events having a higher priority than trouble and supervisory events.

4.1.2 Alarm Silence

The *Alarm Silence* key performs the same functions as Acknowledge/Step. In addition, if an alarm exists, it turns off all silenceable NACs (Notification Appliance Circuits) and causes the Alarm Silenced LED to turn on. It also sends an 'alarm silenced' message to the printer, history file and optional annunciators. A subsequent new alarm will resound the system NACs. *Note that the Alarm Silenced LED is turned off by pressing the Reset key, the Drill key or subsequent activation of the NACs*.

4.1.3 Drill/Hold 2 Sec

When the *Drill* key is held for a minimum of two seconds (time required to prevent accidental activations), the FACP turns on both main panel NAC outputs and all silenceable circuits such as control modules that are programmed as silenceable, and turns off the Alarm Silenced LED if it was previously on. The *FIRE DRILL ACTIVE* system trouble is shown on the LCD display. The same message is sent to the printer and history file. The *Alarm Silence* key can be used to turn off all silenceable NAC outputs following activation by the *Drill* key.

4.1.4 Reset

Pressing and releasing the *Reset* key turns off all control modules and NACs, temporarily turns off resettable power to 4-wire detectors, causes a *RESET IN SYSTEM* message to be displayed on the LCD and sends the same message to the printer and history file. It also performs a lamp test by turning on all LEDs (except the Ground LED), piezo sounder and LCD display segments after the *Reset* key is released. Any alarm or trouble that exists after a reset will resound the system.

4.1.5 Function Keys F1-F4

The four function keys are user programmable. These keys can be programmed to allow rapid disable/enable of various fire panel inputs and outputs during scheduled maintenance. Refer to "Function Keys" on page 68 for instructions on programming. Slide-in labels are provided on page 165.

4.2 LED Indicators

The 11 LED indicators, which are located on the front panel, operate as follows:

Fire Alarm

This red LED flashes when one or more alarms occur. It illuminates steady when the *Acknowledge/Step* or *Alarm Silence* key is pressed. The Fire Alarm LED turns off when the *Reset* key is pressed. The LED will remain off if all alarms have been cleared.

CO Alarm

This yellow LED flashes when one or more alarms occur. It illuminates steady when the *Acknowledge/Step* or *Alarm Silence* key is pressed. The CO Alarm LED turns off when the *Reset* key is pressed. The LED will remain off if all alarms have been cleared.

AC Power

This is a green LED which illuminates if AC power is applied to the FACP. A loss of AC power will turn off this LED

Supervisory

This is a yellow LED that flashes when one or more supervisory conditions occur, such as a sprinkler valve tamper condition. It illuminates steady when the *Acknowledge/Step* or *Alarm Silence* key is pressed. It turns off when the *Reset* key is pressed and remains off if all supervisory alarms have been cleared.

Trouble

This is a yellow LED that flashes when one or more trouble conditions occur. It stays on steady when the *Acknowledge/Step* or *Alarm Silence* key is pressed. The LED turns off when all trouble conditions are cleared. This LED will also illuminate if the microprocessor watchdog circuit is activated.

Ground

This is a yellow LED that flashes to indicate a ground fault condition (zero impedance from the FACP to ground).

Battery

This is a yellow LED that flashes to indicate a low battery voltage condition.

Disabled

This is a yellow LED that flashes to indicate that a zone, NAC, detector or module has been temporarily disabled in programming by the user.

Communication

This is a yellow LED that flashes to indicate a communication fault, including loss of phone lines, communication failure with either Central Station, or total communication failure.

Maintenance

This is a yellow LED that flashes to indicate that a smoke detector requires cleaning or replacement due to an invalid chamber reading or excessive drift.

Alarm Silenced

This is a yellow LED that turns on after the *Alarm Silence* key is pressed while an alarm condition exists. It turns off when the *Drill* or *Reset* key is pressed.

4.3 Normal Operation

With no alarms or troubles in the system, the display message is *System Normal* along with the current time and date as shown below. To set the time and date, refer to the appropriate section in this manual.

```
SYSTEM NORMAL
10:35A 121822
```

The ES-1000X performs the following functions at regular intervals while in Normal mode:

- ✓ Monitors AC input voltage and battery voltage
- ✓ Monitors and reports status of SLC loop, option cards, and control panel
- ✓ Polls all devices on the SLC loop and flashes each device LED while checking for valid replies, alarms, troubles, etc.
- ✓ Refreshes LCD display and updates time
- ✓ Scans control panel keypad for key presses
- ✓ Performs autotest for all SLC devices
- ✓ Tests memory
- ✓ Updates and reads all communications busses

4.4 Trouble Operation

With no alarms in the system, the detection of a trouble will cause the following:

- The piezo to pulse 1 second On and 1 second Off
- The system Trouble LED to flash one second On and one second Off
- The trouble relay to activate
- *TROUBL* with device type, noun/adjective, address and trouble description will appear on the LCD display
- The same message, along with the time and date, is sent to the optional printer and the history buffer.
- Communicate the trouble conditions to the Central Station
- Terminate upload or download communications

Note that specific troubles will initiate additional actions; for example, loss of AC power will turn off the AC Power LED, a ground fault will turn on the Ground LED, etc.

Addressable Smoke Detectors, Monitor Modules and Control Modules

For addressable devices connected to the SLC loop, the following is a typical message that could appear on the LCD display for a device trouble:

```
TROUBL SMOKE (PHOTO)
   <ADJ> <NOUN>
            INVREP
 07:07P 091222 1D001
```

The information displayed in the above example provides the following information:

- First line in display:
  - ✓ The type of event; in this example *TROUBL* indicating a device trouble
  - ✓ Device type identifier; in this example, *SMOKE (PHOTO)* indicates a Photoelectric smoke detector. Other device type identifiers which can be displayed include *SMOKE (ION)* for Ionization Detector, *HEAT* for Heat Detector, *CONTROL* for Control Module and *MONITOR* for Monitor Module, *PULL STATION* for a manual pull box, etc. Refer to “Edit Detector” on page 51, “Edit Module Screen for Monitor Module” on page 57 and “Edit Module Screen for Control Modules” on page 61 for information on additional device types.
- Second line in display:
  - ✓ <ADJ>; refers to the user programmed adjective descriptor from library list resident in the control panel or custom entry via PC.

✓ <NOUN>; refers to the user programmed noun descriptor from library list resident in the control panel or custom entry via PC.

- Third line in display: *INVREP* indicates an invalid reply from the addressable device. Other possible troubles include:
  - *SHORT* - indicating a shorted circuit on an addressable device
  - *OPEN* - indicating an open circuit on an addressable device
  - *DIRTY1* - maintenance alert indicating that a detector is near but below the allowed alarm limit and is in need of maintenance before the performance is compromised
  - *DIRTY2* - maintenance alert indicating that a detector needs immediate maintenance since it has been within 80% of its alarm threshold for 24 hours
  - *INVREP* - maintenance alert indicating a hardware or communication problem in the detector
  - *CO EOL* - indicating an expired CO detector
  - *CO 6MO* - indicating that the CO detector will expire in six months
  - *TEST F* - indicating a detector has failed the automatic test operation which functionally checks its sensing chamber and electronics
  - *INV ID* - indicating that an incorrect device code (Type ID) has been programmed for an installed device (for example, Photo has been programmed but an Ion detector has been installed)
  - *SW TBL* - indicating a module has failed the testing of its Class A switching relay
  - *BLOCK* - indicating that a beam detector's beam is totally blocked
  - *ALIGN* - indicating that a beam detector is in beam alignment mode
- Fourth line in display:
  - ✓ Time; the current time in this example is *07:07P* which represents 07:07 PM
  - ✓ Date; the current month, day and year in this example is *12* for September, *12* for the 12th day of the month and *22* for the year 2022
  - ✓ Device Address; *1D001* in this example *1* represents SLC Loop, *D* represents a detector and *001* represents device address 001

Pressing the *Acknowledge* or *Alarm Silence* key will cause the pulsing piezo to silence and the system Trouble LED to change from flashing to on steady. This block acknowledgment occurs regardless of the number of troubles, alarms and supervisory events active in the system. When the *Acknowledge* key is pressed and at least one new alarm or trouble exists in the system, the 'acknowledge' message is sent to the printer and history file. If the trouble clears, either before or after the *Acknowledge* key is pressed, the 'clear trouble' message is sent to the printer and history file.

If all troubles clear and there are no supervisory or fire conditions active in the system, the system returns to normal mode operation and the *System Normal* message is shown on the LCD display and sent to the history and printer files. The auto-restore feature will restore cleared troubles even if the troubles were never acknowledged. Note that pressing the *Alarm Silence* key when only troubles exist in the system will have the same effect as pressing the *Acknowledge* key except the Alarm Silenced LED will light.

4.5 Alarm Operation

Alarm operation is similar to trouble operation with the following differences:

- The piezo sounder produces a steady output as opposed to a pulsed output
- The Fire Alarm LED flashes 1 second On and 1 second Off
- The LCD displays *Alarm* along with the device name, type, address, adjective/noun, associated zones and time/date
- Communicate the alarm to the Central Station
- Alarms latch and *are not allowed to clear automatically*
- Alarms activate software zones if so programmed
- Timers for Silence Inhibit, Autosilence, and Trouble Reminder are started
- Alarms activate the general alarm relay and general alarm zone Z000
- The trouble relay is not activated
- Store event in history buffer
- Terminate upload or download communications
- Alarms must be Acknowledged before the FACP can be reset

A typical alarm display would be as illustrated below:

```
ALARM PULL STATION
    <ADJ> <NOUN>
            Z000
 02:3PA 062522 1M001
```

Note that the device type, which in this example is *PULL STATION*, can be any other programmable alarm type.

The information displayed in the above example provides the following information:

- First line in display:
  - ✓ The type of event; in this example *ALARM* indicating an alarm condition
  - ✓ Device type identifier; in this example, *PULL STATION* indicates a manual pull box. Other device type identifiers which can be displayed include *SMOKE (ION)* for Ionization Detector, *HEAT* for Heat Detector, *CONTROL* for Control Module and *MONITOR* for Monitor Module, *PULL STATION* for a manual pull box, etc. Refer to "Edit Detector" on page 51, "Edit Module Screen for Monitor Module" on page 57 and "Edit Module Screen for Control Modules" on page 61 for information on additional device types.
- Second line in display:
  - ✓ <ADJ>; refers to the user programmed adjective descriptor from library list resident in the control panel or custom entry via PC.
  - ✓ <NOUN>; refers to the user programmed noun descriptor from library list resident in the control panel or custom entry via PC.

- Third line in display: *Z000* indicates the zone programmed to this device which, in this example, is general alarm Zone 000. Note that a single device can be programmed to five different zones but only the first zone will be displayed.
- Fourth line in display:
  - ✓ Time; the current time in this example is *02:37P* which represents 2:37 PM
  - ✓ Date; the current month, day and year in this example is *06* for June, *25* for the 25th day of the month and *22* for the year 2022
  - ✓ Device Address; *1M001* in this example *1* represents SLC Loop, *M* represents a module and *001* represents device address 001

4.6 CO Alarm Operation

NOTE: When using carbon monoxide detection the system must be monitored by a Supervising Station, meeting the Standard for the Installation of Carbon Monoxide (CO) Detection and Warning Equipment, NFPA 720.

When a CO alarm operation occurs:

- The piezo sounder produces a steady Temporal 4 output
- The CO Alarm LED flashes 1 second On and 1 second Off
- The LCD displays *CO Alarm* along with the device name, type, address, adjective/noun, associated zones and time/date
- Communicate the CO alarm to the Central Station
- CO alarms latch and *are not allowed to clear automatically*
- CO alarms activate software zones if so programmed
- Timers for Silence Inhibit, Autosilence, and Alarm Reminder are started
- CO alarms activate the relays programmed for CO alarm
- The trouble relay is not activated
- Store event in history buffer
- Terminate upload or download communications
- CO alarms must be Acknowledged before the FACP can be reset

A typical CO alarm display would be as illustrated below:

```
ALARM CAR MONOXIDE
   <ADJ> <NOUN>
            Z002
11:46P 100922 1M001
```

The information displayed in the above example provides the following information:

- First line in display:
  - ✓ The type of event; in this example *ALARM* indicating a CO alarm condition
  - ✓ Device type identifier; in this example, *CAR MONOXIDE* indicates a CO detector.
- Second line in display:
  - ✓ <ADJ>; refers to the user programmed adjective descriptor from library list resident in the control panel or custom entry via PC.
  - ✓ <NOUN>; refers to the user programmed noun descriptor from library list resident in the control panel or custom entry via PC.
- Third line in display: *Z002* indicates the zone programmed to this device which, in this example, is general alarm Zone 002. Note that a single device can be programmed to five different zones but only the first zone will be displayed.
- Fourth line in display:
  - ✓ Time; the current time in this example is *11:46P* which represents 11:46 PM
  - ✓ Date; the current month, day and year in this example is *10* for October, *09* for the 9th day of the month and *22* for the year 2022
  - ✓ Device Address; *1M001* in this example *1* represents SLC Loop, *M* represents a module and *001* represents device address 001

4.7 Supervisory Operation

Supervisory operation is similar to alarm operation but with the following differences:

- The piezo sounder pulses ½ second On and ½ second Off
- The Supervisory LED flashes ½ second On and ½ second Off
- The LCD displays the status label *Active Supervisory* along with the device name, type, address, adjective/noun, associated zones, and time/date
- Communicate the supervisory condition to the Central Station
- The supervisory relay is activated
- The alarm relay is <u>not</u> activated
- Silenced alarms are resounded
- Timers are not started
- Store event in history buffer
- Terminate upload or download communications

A typical Supervisory event would be displayed as illustrated in the following:

```
ACTIVE SUPERVISORY
   <ADJ> <NOUN>
             Z000
 06:21A 121822 1M001
```

Note that, like alarms, supervisory signals latch (except when programmed for supervisory autoresettable) and can be assigned to software zones. Supervisory alarms do not cause resound as do other alarm conditions. Open circuits in supervisory wiring are processed by the control panel the same way as other trouble conditions. Refer to “Alarm Operation” on page 104, for a description of the information displayed on the control panel LCD.

4.8 Process Monitor Operation

Process Monitor operation will initiate the following events:

- The piezo sounder pulses ¼ second On and ¼ second Off
- The LCD displays a process monitor message along with the device name, type, address, adjective/noun, associated zones, and time/date
- Communicate the process monitor condition to the Central Station (if the default event code has been changed from 000 to a reportable event code)
- Relays programmed for process monitoring will be activated
- The alarm relay is not activated
- Fire Alarm NACs will not activate
- SLC NACs (control modules) will activate
- Timers are not started
- Store event in history buffer
- Activate appropriate LED on the ANN-LED annunciator (required for this application)
- Each ANN-LED can support up to 10 zones.

Note that, like supervisories, process monitor signals latch (except when programmed for process monitor autoresettable) and can be assigned to software zones.

4.9 Hazard/Tornado Condition Operation

Hazard/Tornado operation is intended for Manual activation.

Hazard/Tornado Condition operation will initiate the following events:

- The piezo sounder pulses 1/4 second On, 1/4 second Off
- The LCD displays a hazard message along with the device name, type, address, adjective/noun, associated zones, and time/date
- Communicate the hazard condition to the Central Station (if the default event code has been changed from 000 to a reportable event code)
- Relays programmed for hazard will be activated
- The alarm relay is not activated
- Fire Alarm NACs will not activate
- SLC NACs (control modules) will activate
- Timers are not started
- Store event in history buffer
- Activate appropriate LED on the ANN-LED annunciator (required for this application)
- Each ANN-LED can support up to 10 zones.

Hazard conditions latch. They can be assigned to software zones.

4.10 Medical Alert Condition Operation

Medical alert operation is:

- not intended for nurse call stations (applications) per UL1069.
- not intended for signaling professional medical staff.
- to be used for summoning security guards or other trained personnel within the facility
- intended for Manual activation.

Medical Alert Condition operation will initiate the following events:

- The piezo sounder 1/4 second On, 1/4 second Off
- The LCD displays a medical alert message along with the device name, type, address, adjective/noun, associated zones, and time/date
- Communicate the medical alert condition to the Central Station
- Relays programmed for medical alert will be activated
- The alarm relay is not activated
- Fire Alarm NACs will not activate
- SLC NACs (control modules) will activate
- Timers are not started
- Store event in history buffer

- Activate appropriate LED on the ANN-LED annunciator (required for this application)
- Each ANN-LED can support up to 10 zones.

Medical alert conditions latch. They can be assigned to software zones.

4.11 NAC Operation

There are four programmable NACs (Notification Appliance Circuits) resident on the ES-1000X main circuit board. All NACs may be programmed as silenceable or nonsilenceable and may also be programmed for steady or coded operation. Coded operation provides a choice between March Time, Temporal or California coding.

4.12 Programmed Zone Operation

Each addressable detector and monitor module can be assigned to a maximum of five software alarm zones. A general alarm zone Z000 may be listed for output (control) points, but it is not necessary to list Z000 for input points, since this is the default zone for all alarm input devices. Zone Z000 is not activated by supervisory points.

When an input device alarms and is not disabled, it activates all software zones assigned to it. An output device that is not disabled is turned on when any of the software zones to which it is programmed become active. Only alarms, hazards/tornado alerts can turn on any of the four main NACs.

4.13 Disable/Enable Operation

Input points which are disabled do not cause an alarm or any zone activation. Disabled output points are held in the off state. All disabled points are treated as if they were in trouble, with the exception being the status label that will be displayed is *DISABL*.

4.14 Waterflow Circuits Operation

If an alarm exists from a monitor module point that has a waterflow type code and its mapped NAC control module outputs are programmed for non-silenceable operation, the Alarm Silence key will not function. Also, any output zone activated by a waterflow device will not be silenceable if the Waterflow Silenceable option is set to NO in system programming.

4.15 Detector Functions

Maintenance Alert

Each addressable detector is monitored by the control panel for its maintenance status. If a detector is near but below the allowed alarm limit, a ‘maintenance alert’ message will automatically be displayed, signaling that the detector is in need of servicing.

Automatic Test Operation

An automatic test of an addressable detector is performed each minute, resulting in a complete SLC loop test in approximately 5 hours (if the loop has the maximum number of devices installed). The detector’s sensing chamber and electronics are functionally tested for normal, safe operation. A trouble message is displayed upon failure of this test. A System Reset will clear this trouble.

Type Code Supervision

The FACP monitors addressable hardware device codes at slow intervals. Mismatch of any type code, compared to the system program, will cause a device trouble.

System Alarm Verification

The control panel may be programmed to perform alarm verification to help eliminate the nuisance of false alarms. Alarm verification applies to smoke detectors only.

Smoke Detector Data

Smoke detector data is monitored by the FACP, eliminating the need to test the sensitivity of each detector at its location. A printout of each detector’s data can be retrieved from the FACP using an optional printer or Windows® HyperTerminal. Detector sensing ability can decrease with age and should be monitored as part of a system’s routine maintenance.

4.16 Time Functions: Real-Time Clock

The ES-1000X includes a crystal-based clock that provides time of day, date and day of week. Time is displayed as 12 or 24 hour time with month/day/year and is stored in RAM. Daylight savings time change-over is programmable and automatic. If both AC and battery are lost, the time must be reset.

4.17 Synchronized NAC Operation

Synchronization is a panel feature that controls the activation of notification appliances in such a way that all devices will turn on and off at exactly the same time. This is particularly critical when activating strobes which must be synchronized to avoid random activation and a potential hazard or confusion. The FACP can be programmed to operate with a variety of manufacturer’s devices. NAC synchronization can only be supported properly by the Remote Power Supply Sync Terminal, which follows NAC 1 programming.

Important: When a Notification Appliance Circuit with a mix of audible and visual devices is programmed for silenceable and the synchronization feature is selected, only the audible devices will be turned off if the Silence key is pressed. The visual devices (strobes, etc.) will continue to operate.

4.18 Coded Operation

The NAC circuits resident on the control panel main circuit board can be programmed for coded operation. The available pulse rates which can be programmed for coded operation are as follows:

- Continuous: Steady output with no pulsing
- March Time: Pulses at 120 ppm (pulses per minute)
- Temporal 3 Code: Pulses at 1/2 second On, 1/2 second Off, 1/2 second On, 1/2 second Off, 1/2 second On, 1-1/2 second Off
- Temporal 4 Code: Pulses at 1/2 second On, 1/2 second Off, 1/2 second On, 1/2 second Off, 1/2 second On, 1/2 second On, 1/2 second Off, 1-1/2 second Off
- California Code: 10 seconds On, 5 seconds Off
- Two-Stage Pulses at 20 ppm (pulses per minute) for 3 or 5 minutes (depending on programming) and then changes to Temporal

4.19 Pre-signal

Pre-signal option programs an initiating device to delay the activation of NACs and/or control modules while allowing visual verification by a person. Once a detector or monitor module triggers an alarm, the onboard piezo sounds immediately, but the NACs are not activated for a user programmed time duration of up to three minutes. Note that the alarm relay and communicator will respond to the initial alarm immediately. In addition, Zone 254 will activate. This zone can be programmed to a control module which may be used to activate a sounder or indicator which the installer designates as a Pre-signal indication. *Do not assign Zone 254 to a Notification Appliance Circuit when using this zone to indicate a Pre-signal condition.*

After the programmed delay, the NACs will activate if the source of the alarm is not cleared. Note that if a second alarm occurs during the programmed time delay, the alarm will be processed immediately, causing activation of the appropriate output zones. The events which occur upon Pre-signal activation are as follows:

- ✓ onboard piezo sounds immediately
- ✓ control panel LCD display will indicate a Pre-signal event and the active point
- ✓ control points programmed to Zone 254 will activate
- ✓ annunciators (if enabled) will sound the local piezo, and pulse the alarm LED and zone LED
- ✓ outputs (NACs and control modules) of associated zones will be inhibited from activating for a user programmed time delay of up to three minutes
- ✓ second alarm occurring anytime during the time delay will cause immediate activation of all associated outputs

Pre-signal does not affect monitor modules programmed as waterflow, supervisory, process monitoring or remote switches. *Pre-signal operation requires the approval of the local Authority Having Jurisdiction.*

4.20 Positive Alarm Sequence

PAS (Positive Alarm Sequence) option will program a smoke detector to delay panel activation (including alarm relay and communicator) for a period of 15 seconds. Zone 253, however, will activate immediately and may be used to connect a signaling device to indicate PAS activation. *Do not assign Zone 253 to a Notification Appliance Circuit when using this zone to indicate a PAS condition.*

When a detector triggers an alarm, the onboard piezo sounds immediately, but the NACs are prevented from activating for 15 seconds. This inhibit time is factory set and cannot be changed. Pressing the Alarm Silence or Acknowledge/Step key during the 15 second inhibit time will silence the piezo sounder and start a timer which prevents activation of NACs for an additional time duration which can be user programmed for up to three minutes. After the programmed delay, the NACs will activate if the source of the alarm is not cleared. Note that if a second alarm occurs during either time delay, the alarm will be processed immediately, causing activation of the appropriate output zones. The events which occur upon PAS activation are as follows:

- ✓ onboard piezo sounds immediately
- ✓ control panel LCD display will indicate a presignal event and the active point
- ✓ control points programmed to Zone 253 will activate
- ✓ outputs (NACs and control modules) of associated zones will be inhibited from activating for a factory set duration of 15 seconds
- ✓ pressing the Alarm Silence or Acknowledge/Step key will start a timer which inhibits output activation for additional time delay of up to three minutes which is user programmable
- ✓ second alarm occurring anytime during either time delay will cause immediate activation of all associated outputs

PAS operation requires the approval of the local Authority Having Jurisdiction.

Note that the *PAS BYPASS* monitor type code, when activated, will inhibit the PAS capability until the *PAS BYPASS* monitor is deactivated. While PAS is inhibited, signaling devices will immediately place the control panel into alarm. This feature may be employed by wiring a normally open device, such as a switch, to a monitor module which has been programmed for *PAS BYPASS*.

4.21 Special System Timers

4.21.1 Silence Inhibit Timer

This option, if selected, prevents the *Alarm Silence* key from functioning for 5 minutes following an alarm. A new alarm during the initial 5 minute period will not cause the timer to restart with a new 5 minutes. *Silence Inhibit operation requires the approval of the local Authority Having Jurisdiction.*

4.21.2 Autosilence Timer

If Autosilence is selected, the notification appliances, programmed as silenceable, will automatically be silenced after a programmable duration of 5 to 30 minutes. Pressing the *Drill* key will restart the timer. *Autosilence operation requires the approval of the local Authority Having Jurisdiction.*

4.21.3 Trouble Reminder

If selected, this feature causes a reminding 'beep' every 15 seconds during an alarm (after the *Alarm Silence* key is pressed) and every two minutes during a trouble condition (after the *Acknowledge/Step* or *Alarm Silence* key is pressed). The 'beeps' from the onboard piezo sounder will occur until the alarm or fault is cleared.

Note that if the trouble is not cleared within 24 hours, the piezo will resound, indicating that the trouble condition still exists.

4.21.4 Waterflow Retard Timer

If selected, this option will delay the activation of a waterflow type alarm for a programmable time duration from 1 to 90 seconds. This delay is in addition to any time delay inherent in the waterflow device. *This feature requires the approval of the local Authority Having Jurisdiction.*

4.21.5 Alarm Verification (None or One Minute)

If alarm verification is selected, an addressable smoke detector's alarm is ignored for a retard time of 13 seconds and the detector's alarm condition is automatically reset. There will be no alarm indication at the FACP during the Retard period. A confirmation period of 60 seconds follows, during which a subsequent alarm from the same detector will cause the panel to immediately activate the appropriate outputs and indicate the alarm condition at the FACP. If a different detector alarms any time during the first detector's verification period, the panel will immediately activate all appropriate outputs and indicate the alarm condition at the FACP. If no additional detector alarms occur within 73 seconds of the first alarm (13 second retard plus 60 second confirmation), the timer resets and the panel is ready to verify any new detector alarms which may occur. The following is a graphic representation of Alarm Verification.

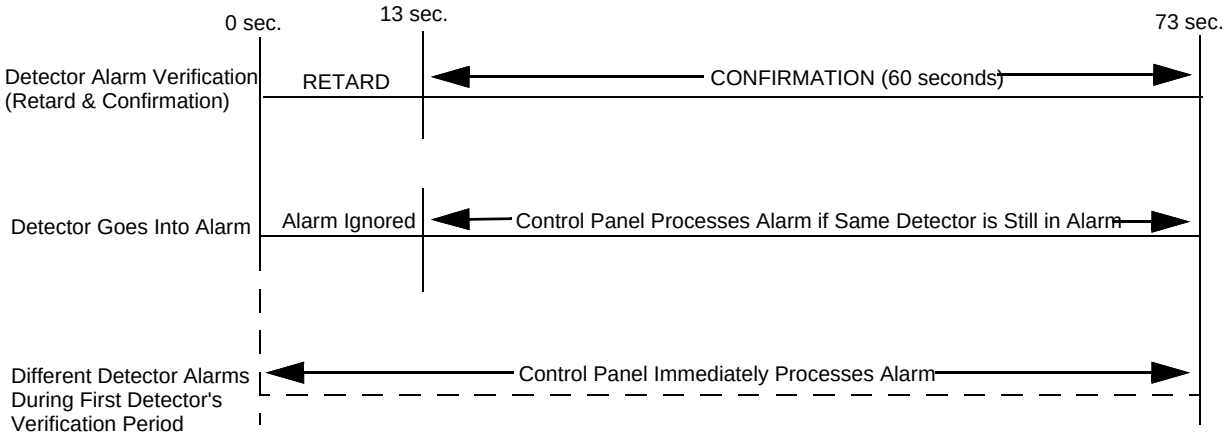

NOTE: Alarm Verification is available only for addressable smoke detectors, not conventional smoke detectors.

4.21.6 Control Module Delay Timer

The control module delay feature, if enabled, will delay activation of a control module after a programmed time of 1-180 seconds after being triggered by an alarm condition. *This feature requires the approval of the local Authority Having Jurisdiction.* Refer to the table on page 43 for permissible settings.

4.22 Walktest

Walktest is a feature which allows one person to test the fire alarm system. An audible walktest will momentarily sound the Notification Appliance Circuits in the building and store the walktest information in a file at the panel. A silent walktest will not sound the NACs but will store the walktest information in a file which can be viewed at the panel. Disabled NAC devices will not activate during walktest.

Alarm/Shorted Condition

When in audible Walktest, the panel responds to each new alarm and activates its programmed control outputs for four seconds, if those outputs have been programmed for silenceable activation. It also stores each alarm in the walktest history file which can be sent to an optional printer. The stored display will be the same as if the device actually activated except the colon (**:**) in the time stamp is replaced with an asterisk (*****).

Note that if the system under test includes one or more enabled MMF-302 monitor modules, the following may apply:

If the MMF-302 monitor module is used for a supervised, 2-wire smoke zone, alarming any monitor module in the system will result in the activation of programmed control outputs for an additional eight seconds or less. This is caused by the temporary removal of 24 VDC resettable power from the MMF-302. The MMF-302 reports this loss of power as an open condition in addition to the alarm condition.

Open Condition

Addressable devices are monitored for fault conditions during Walktest mode. When a new trouble condition occurs, the FACP will activate all NACs and control modules programmed for Walktest and mapped to the faulty device, then shut them off after eight seconds.

While in Walktest, the trouble relay is activated and the system Trouble LED flashes (as in all of the Program and status change operations). The alarm relay is not activated.

4.23 Read Status

Read Status functions do not require a password. The control panel will continue to provide fire protection while in Read Status mode. This mode can be entered while the control panel is in alarm or trouble. If a new alarm or trouble occurs during these functions, the Read Status is exited to prevent confusion.

Read Status Entry

When the operator presses the control panel **ENTER** key, the LCD will display the following:

```
     MAIN MENU
1=READ STATUS MODE
2=LOGIN
```

Pressing *1*, while this screen is being displayed, will cause the control panel to enter the Read Status mode which allows the user to view and print the programmed features and status of the control panel.

The following screens will be displayed:

```
    READ STATUS
1=SYSTEM POINT
2=ZONES
3=NOT USED     ****
```

Read Status Screen #1

```
    READ STATUS
1=TROUBLE REMINDER
2=TIMERS
3=NACS
```

Read Status Screen #2

```
    READ STATUS
1=RELAYS
2=PROGRAM CHECK
3=HISTORY
```

Read Status Screen #3

```
    READ STATUS
1=ANNUNCIATORS
2=COMMUNICATOR
3=NOT USED     ***
```

Read Status Screen #4

```
    READ STATUS
1=REVISIONS
2=PRINT
3=TIME/DATE
```

Read Status Screen #5

```
    READ STATUS
CHARGER ENAB   YES
4XTM SPV ENAB   NO
REM SYNC ENAB  YES
```

Read Status Screen #6

4.23.1 System Point

```
  READ STATUS
1=SYSTEM POINT
2=ZONES
3=NOT USED     ***
```

Read Status Screen #1

Pressing *1* while viewing Read Status Screen #1 will cause the following screen to be displayed. Choose the loop on which the point is located.

```
 READ POINT, LOOP:
1=LOOP 1
2=LOOP 2
3=LOOP 3
```

Then, select the point type. Select *1* for Detector or *2* for Module.

```
 READ SYSTEM POINT
    SELECT TYPE
1=DETECTOR
2=MODULE
```

The operator selects the type of device which is to be viewed by pressing *1* for Detector or *2* for Module. If *1* is pressed, the display will change to the following screen:

```
 READ SYSTEM POINT
ENTER DETECTOR#
***
```

Entering the three digit detector address will cause the control panel to display the current status of the selected device. For example, if a detector with address *001* on the SLC loop is entered, a display similar to the following will appear:

```
NORMAL SMOKE(PHOTO)
   NORTH CLASSROOM
             Z005
         V   1D001
```

The information in the preceding display includes:

- *NORMAL* - the present status (could also be ALARM, TROUBL, DISABL, etc.)
- *SMOKE (PHOTO)* - the device type which is a photoelectric smoke detector (could also be ION for ionization smoke detector)
- *NORTH CLASSROOM* - the Adjective/Noun label for this device
- *Z005* - the first of five possible assigned software zones
- *1D001* - *1* = SLC Loop, *D* = Detector, *001* = Address 001
- V - Alarm Verification Enabled (V = Yes, * = No)
- S - Silenceable for control modules (S = Yes, * = No)
- W - Walktestable for control and monitor modules (W = Yes, * = No)

Pressing the down arrow key, while viewing the screen shown above, will allow the operator to view additional programming information about the selected device, such as:

- Enable/Disable Status
- Device Type
- Alarm Verification On/Off (for detectors)
- Walktest Yes/No
- PAS (Positive Alarm Sequence) Yes/No (for detectors only)
- Pre-Signal Yes/No (for detectors and monitor modules)
- Zone Assignments (five maximum)
- Chamber Value
- Adjective/Noun descriptor
- Silenceable Yes/No (for control modules)
- MNS Override Enabled/Disabled (for control modules)
- Wireless Yes/No (for detectors only)
- Sounder Base Yes/No (for detectors only)
- Sounder Base Values and Zone Assignments (for detectors only)

4.23.2 Zones

```
 READ STATUS
1=SYSTEM POINT
2=ZONES
```

Read Status Screen #1

Pressing *2* while viewing Read Status Screen #1 will cause the following screens to be displayed.

```
      ZONES
1=ZONES INSTALLED
2=ZONES ENABLED
3=ZONES DISABLED
```

Zones Screen #1

```
      ZONES
1=SPECIAL PURPOSE
2=ZONE TYPE
3=ZONE MESSAGE
```

Zones Screen #2

From the preceding screens, the control panel operator can view:

- *Zones Installed* - all software zones programmed into the system (255 maximum)
- *Zones Enabled* - all software zones that are enabled
- *Zones Disabled* - all software zones that have been disabled
- *Special Purpose* - on or off programming for Special Purpose Zones 253 reserved for PAS, 254 reserved for Pre-signal, 255 reserved for Two Stage, and 252 for Local Alarm
- *Zone Type* - the Type assigned to each installed zone (default is Alarm)
- *Zone Message* - the Message assigned to each installed zone

4.23.3 Trouble Reminder

```
 READ STATUS
1=TROUBLE REMINDER
2=TIMERS
3=NAC
```

Read Status Screen #2

Pressing *1* while viewing Read Status Screen #2 will display the following screen:

```
 TROUBLE REMINDER
TROUBLE REM     24HR
```

The screen indicates whether the Trouble Reminder feature is set to sound every 4 or 24 hours.

4.23.4 Timers

Pressing *2* while viewing Read Status Screen #2 will cause the following Timer screens to be displayed:

```
     TIMERS
PAS DELAY        000
PRE SIGNAL       000
WATERFLOW        000
```

```
     TIMERS
AC LOSS DELAY     02
CTRL MOD DLY     000
```

These screens will indicate the delay time, in seconds, for each of the first three and last possible delay options. The AC Loss Delay time is displayed in hours.

4.23.5 NACs

Each NAC can be programmed individually with unique settings with the exception of Canadian Mode. When the Canadian Option is selected in programming (see “Canadian Option” on page 76), all NAC settings are changed to that of NAC 1. While in Canadian Mode, if any NAC is setting is changed, all other NACs will get those same settings. Pressing 3 while viewing Read Status Screen #2 will display the following screen:

```
        NAC
1=NAC 1       3=NAC 3
2=NAC 2       4=NAC 4
```

The operator can press *1* to view the programmed options for NAC 1, *2* to view the programmed options for NAC 2, *3* to view the programmed options for NAC 3, or *4* to view the programmed options for NAC 4. The resulting screens will display the following information:

- Enable/Disable Status
- Circuit Type (Bell, Strobe, etc.)
- Silenceable/Non-silenceable
- Auto Silence Enable/Disable and time delay (in minutes)
- Coding Selection (Temporal, Steady, etc.)
- Zone Assignments
- Silence Inhibit Enabled/Disabled
- Synchronization Type (System Sensor, Wheelock, or Gentex)
- MNS Override Enabled/Disabled
- MNS Active Yes/No

4.23.6 Relays

```
  READ STATUS
1=RELAYS
2=PROGRAM CHECK
3=HISTORY
```

Read Status Screen #3

Pressing *1* while viewing Read Status Screen #3 will display the following screen:

```
       RELAYS
1=RELAY 1
2=RELAY 2
3=RELAY 3
```

The operator can view the programmed option for each relay by pressing the corresponding number key.

4.23.7 Program Check

Pressing *2* while viewing Read Status Screen #3 will cause a screen similar to the following to be displayed:

```
    PROGRAM CHECK  ⇩
1=NACS NO INPUT
2=ZONES NO INPUT
3=ZONES NO OUTPUT
```

Program Check Screen #1

Pressing *1* while viewing Program Check screen will display a screen which will indicate if any input zones have not been programmed to one of the Notification Appliance Circuits. Use the up and down arrow keys to view all NACs.

Pressing *2* while viewing the Program Check screen will display a screen which will indicate if any output zones have not been programmed to at least one input zone. Use the up and down arrow keys to view all zones.

Pressing *3* while viewing the Program Check screen will display a screen which will indicate if any input zones have not been programmed to at least one output zone. Use the up and down arrow keys to view all zones.

4.23.8 History

Pressing *3* while viewing Read Status Screen #3 will display the following screen:

```
     HISTORY
1=VIEW ALL
2=VIEW ALARMS
3=VIEW OTHER EVENTS
```

The operator can view all events which have been stored in the history file, only alarms or other events, such as troubles or supervisories, by pressing the corresponding number key.

4.23.9 Annunciators

```
 READ STATUS
1=ANNUNCIATORS
2=COMMUNICATOR
3=NOT USED   ***
```

Read Status Screen #4

Pressing *1* while viewing Read Status Screen #4 will display the following screens:

```
   ANN-BUS SELECT
1=PRIMARY
2=SECONDARY
3=ANN-BUS OPTIONS
```

Annunciator Screen

Pressing *1* or *2* for *ANN-BUS* while viewing the Annunciator Screen allows the operator to view the settings and devices for each ANN-BUS. Press *1* for the *Primary ANN-BUS* and *2* for the *Secondary ANN-BUS*.

```
ANN XXXXXXXX
 ENABLED        NO
2=MODULES INSTALLED
 CLASS A        NO
```

ANN-BUS Screen #1

The ANN-BUS Screen #1 indicates if the ANN-BUS has been enabled *Yes* or disabled *No*.

Pressing *2* for *Modules Installed* while viewing ANN-BUS Screen #1 will display screens for ANN-BUS Addresses 1 -8 and the devices installed at each address. A subscreen will display the options that have been programmed for each device.

```
 ANN-BUS SELECT
1=PRIMARY
2=SECONDARY
3=ANN-BUS OPTIONS
```

Annunciator Screen

Pressing *3* for *ANN-BUS Options* while viewing the Annunciator Screen allows the operator to view the settings for any ANN-S/PG, ANN-LED, and ANN-80/ANN-100 installed in the system.

```
     ANN-BUS
1=ANN-S/PG OPTIONS
2=ANN-LED OPTIONS
3=ANN-80/100 OPTIONS
```

ANN-BUS Screen #2

Pressing *1* for *ANN-S/PG Options* while viewing ANN-BUS Screen #2 will display the options selected for the installed ANN-S/PG annunciators.

Pressing *2* for *ANN-LED Options* while viewing ANN-BUS Screen #2 will display the options selected for the installed ANN-LED annunciators.

Pressing *3* for *ANN-80/100 Options* while viewing ANN-BUS Screen #2 will display the options selected for the installed ANN-80/ANN-100 annunciators.

4.23.10 Communicator

```
 READ STATUS
1=ANNUNCIATORS
2=COMMUNICATOR
3=NOT USED
```

Read Status Screen #4

Pressing *2* while viewing Read Status Screen #4 will display the following screens:

```
   COMMUNICATOR
INSTALLED      YES
2=POTS SETTINGS
3=IP SETTINGS
```

Communicator Screen #1

```
   COMMUNICATOR
1=PRI COMM PATH
2=SEC COMM PATH
TBL REPORT LIMIT  0
```

Communicator Screen #2

```
   COMMUNICATOR
1=EVENT CODES
TEST TIME INT    24
24HR TEST TIME 0100
```

Communicator Screen #3

```
   COMMUNICATOR
REPORT STYLE  POINT
```

Communicator Screen #4

The Communicator Screen #1 indicates if an IPOTS-COM has been installed *Yes* or *No*.

Pressing *2* for *POTS Settings* while viewing Communicator Screen #1 will display settings for the telephone portion of the Communicator.

```
   POTS SETTINGS
1=LINE 1
2=LINE 2
3=GAINS
```

Pressing *1* or *2* will display whether each phone line is enabled *Yes* or disabled *No*, whether the phone type is *touchtone* or *rotary*, and whether the phone line is being supervised *Yes* or *No*.

Pressing *3* will display the phone lines' Gains setting. The value for the Dialing Gains and Reporting Gains is shown as *High*, *Normal*, or *Low*.

```
 READ STATUS
INSTALLED        YES
2=POTS SETTINGS
3=IP SETTINGS
```

Communicator Screen #1

Pressing *3* for *IP Settings* while viewing Communicator Screen #1 will display settings for the ethernet portion of the Communicator. Pressing *1* for *IP Addresses* will show the subnet mask address for the communicator. The screen will also indicate if DHCP has been enabled *Yes* or disabled *No*. If the DHCP has not been enabled, the Static Settings will be displayed.

```
  COMMUNICATOR
1=PRI COMM PATH
2=SEC COMM PATH
TBL REPORT LIMIT   0
```

Communicator Screen #2

Communicator Screen #2 allows the programmer to press *1* to view the *Primary Communication Path* settings or *2* to view the *Secondary (backup) Communication Path* settings for the Communicator and indicates the Call Limit for Communicator trouble calls within a 24 hour period.

Pressing *1* for the *Primary Communication Path* or *2* for *Secondary Communication Path* while viewing Communicator screen #2 will cause the following screen to be displayed:

```
  COMMUNICATOR
1=POTS
2=ETHERNET
```

Pressing *1* for *POTS* indicates whether the receiver has been enabled or disabled. It also provides information on the receiver such as:

- Account Code
- Phone Number
- Communication Format

Pressing *2* for *Ethernet* indicates whether the receiver has been enabled or disabled. It also provides information on the receiver such as Central Station (CS) account info.

```
  COMMUNICATOR
1=EVENT CODES
TEST TIME INT     24
24HR TEST TIME  0100
```

Communicator Screen #3

Communicator Screen #3 allows the user to view the Event Codes for the chosen communication format as well as the Test Time Interval and 24 Hour Test Time.

```
  COMMUNICATOR
REPORT STYLE   POINT
```

Communicator Screen #4

Communicator Screen #4 allows the user to view whether the reporting style is by *Point* or *Zone*.

4.23.11 Print

```
 READ STATUS
1=REVISIONS
2=PRINT
3=TIME/DATE
```

Read Status Screen #5

Pressing *1* while viewing Read Status Screen #5 will display the following:

```
   REVISIONS
1=PANEL
2=COMMUNICATOR
3=DISPLAY
```

Revisions Screen #1

```
   REVISIONS
1=LOOP CARD 1
2=LOOP CARD 2
3=LOOP CARD 3
```

Revisions Screen #2

On Revisions Screen #1, press the corresponding number to view the software versions of the FACP panel, the IPOTS-COM communicator, and the FACP display. On Revisions Screen #2, press the corresponding number to view the software information for any SLC3-LS loop card installed on the panel.

To print program data or control panel status, press *2* while viewing Read Status Screen #5. The following screens will be displayed:

```
     PRINT
1=HISTORY
2=WALKTEST LOG
3=WALKTEST SUMMARY
```

Print Screen #1

```
     PRINT
1=DETECTOR DATA
2=COMM SETTINGS
3=EXIT PRINTING
```

Print Screen #2

Pressing *1* while viewing Print Screen #1 allows the user to print the History file which will detail all of the system activities since the file was last cleared from memory.

Pressing *2* while viewing Print Screen #1 allows the user to print the Walktest log which will detail all of the system activations during walktest since the log was last cleared.

Pressing 3 while viewing Print Screen #1 allows the user to print the Walktest summary which will list the total of each type of input activation.

Pressing *1* while viewing Print Screen #2 allows the user to print the detector data for each addressable smoke detector connected to the system. A printout, similar to the following example, will be generated if an optional printer is connected to the FACP.

DEVICE #	DEVICE TYPE	% DRIFT COMP	CHAMBER	TIME/DATE
1D001	SMOKE (PHOTO)	20	1281	12:01 AM 01-08-2016
1D002	SMOKE (PHOTO)	20	1281	12:01 AM 01-08-2016
1D003	SMOKE (PHOTO)	21	1259	12:01 AM 01-08-2016
1D004	SMOKE (PHOTO)	20	1309	12:02 AM 01-08-2016
1D005	SMOKE (PHOTO)	21	1281	12:02 AM 01-08-2016
1D006	SMOKE (PHOTO)	20	1322	12:02 AM 01-08-2016
1D007	SMOKE (PHOTO)	20	1280	12:02 AM 01-08-2016
1D008	SMOKE (PHOTO)	20	1215	12:02 AM 01-08-2016
1D009	SMOKE (PHOTO)	20	1310	12:02 AM 01-08-2016

Chamber Value

The Chamber value should be within the indicated range for the following smoke detectors:

- SD355CO, SD355, SD350(T) D350P(R) and SD300(T) Addressable Photoelectric Smoke Detectors: **405 - 2100** (obscuration of 1.00%/ft to 3.66%/ft.)
- CP355, CP350, and CP300 Addressable Ionization Smoke Detectors: **750 - 2100** (obscuration of 0.50%/ft. to 1.44%/ft.)

If the addressable smoke detector's Chamber reading is not within the acceptable range, clean the detector and check the Chamber value again. If the reading is still not within the acceptable range, immediately replace the detector.

Drift Compensation

Drift compensation uses software algorithms that identify and compensate for long-term changes in the data readings from each addressable smoke detector. These long-term changes in detector data readings are typically caused by dirt and dust accumulation inside the smoke chamber. Drift compensation performs the following functions:

- Samples photoelectric smoke detectors every 6 seconds and ionization smoke detectors every 3 seconds
- Allows a smoke detector to retain its original ability to detect actual smoke and resist false alarms, even as dirt and dust accumulate
- Reduces maintenance requirements by allowing the control panel to automatically perform the periodic sensitivity measurements required by NFPA Standard 72

The FACP software also provides filters to remove transient noise signals, usually caused by electrical interference.

Maintenance Alert

The software determines when the drift compensation for a detector reaches an unacceptable level that can compromise detector performance. When a detector reaches an unacceptable level, the control panel indicates a maintenance alert. Table 4.1 summarizes the three levels of maintenance alert:

Maintenance Level:	FACP Status Displays:	Indicates:
Low Chamber Value	INVREP	A hardware problem in the detector
Maintenance Alert	DIRTY1	Dust accumulation that is near but below the allowed limit. *DIRTY 1* indicates the need for maintenance before the performance of the detector is compromised
Maintenance Urgent	DIRTY2	Dust accumulation above the allowed limit.

Table 4.1 Maintenance Alert Levels

Figure 4.1 illustrates a graphic representation of the maintenance levels:

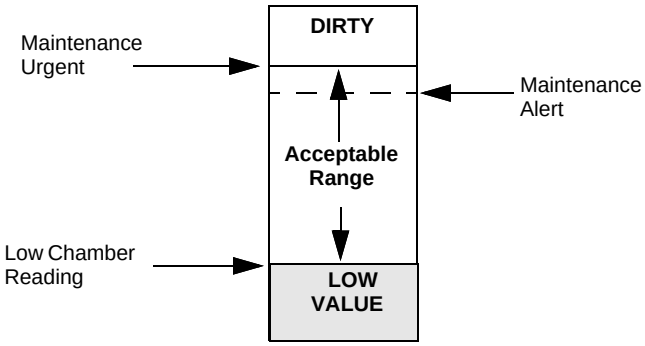

Figure 4.1 Diagram of Maintenance Levels

```
      PRINT
1=DETECTOR DATA
2=COMM SETTINGS
3=EXIT PRINTING
```

Print Screen #2

Pressing *2* while viewing Print Screen #2 allows the user to print the Communicator's settings. Refer to "Communicator" on page 79 for additional information on the display.

Pressing *3* while viewing Print Screen #2 exits the user from the print menu.

4.23.12 Time/Date

```
   READ STATUS
1=REVISIONS
2=PRINT
3=TIME/DATE
```

Read Status Screen #5

The operator can view the daylight savings time and the month and week when daylight savings time will begin and end. Pressing *2* while viewing Read Status Screen #5 will display the following screens:

```
 DAYLIGHT SAVINGS ⇩
ENABLED        YES
START MONTH    MAR
START WEEK   WEEK 2
```

```
 DAYLIGHT SAVINGS ⇧
END MONTH      NOV
END WEEK     WEEK 1
```

4.23.13 Battery Charger

```
   READ STATUS
CHARGER ENAB    YES
4XTM SPV ENAB    NO
REM SYNC ENAB   YES
```

Read Status Screen #6

Read Status Screen #6 indicates whether the onboard battery charger is enabled or disabled.

4.23.14 4XTM Supervision

Read Status Screen #6 indicates whether 4XTMF Supervision is enabled or disabled.

4.23.15 Remote Sync

Read Status Screen #6 indicates whether remote synchronization is enabled or disabled.

Section 5: Central Station Communications - POTS Transmission

The control panel transmits zone and system status reports to Central Stations via the public switched telephone network. Two supervised telephone line connections are made to interface the control panel to the telephone lines. Two optional 7 foot telephone cords are available for this purpose and can be purchased separately.

The control panel supervises both telephone lines for proper voltage. A delay of two minutes will occur before a fault in either phone line connection is reported as a trouble. When a fault is detected, an audible trouble signal will sound, the yellow trouble LED will blink, the LCD display will indicate the phone line trouble and the trouble condition will be reported to the Central Station over the remaining operational phone line.

The control panel comes with line seizure capability provided for both the primary and secondary telephone line interfaces. Any time that the control panel needs to make a call to a Central Station, line seizure will disconnect any local premises phones sharing the same telephone line.

All transmissions to the Central Stations will be sent over the primary phone line. In the event of noisy phone lines, transmissions will be sent over the backup secondary phone line.

Two phone numbers must be programmed, the primary Central Station phone number and the secondary Central Station phone number. All system reports will be transmitted to the primary Central Station phone number. Reports will automatically be sent to the secondary Central Station phone number if attempts to transmits to the primary Central Station phone number are unsuccessful. If 10 total attempts to communicate are unsuccessful, a Communicator Failure report will be displayed.

The ES-1000X meets NFPA 72 National Fire Code reporting requirements for: (a) the type of signal, (b) condition and (c) location of the reporting premises. The general priority reporting structure is:

1. Zone Alarms and Restores
2. Zone Troubles and Restores
3. System Troubles and Restores
4. 24-hour Test

The minimum gauge wire is 26 AWG.

5.1 Transmittal Priorities

The integral communicator transmits highest priority events first. Events, in terms of priority, are listed below in descending order:

1. Alarms (highest priority level)
   - ✓ Pull stations
   - ✓ Waterflow
   - ✓ Smoke detector
   - ✓ Other fire alarm types
   - ✓ CO alarm
2. Supervisory Zone
3. System Troubles
   - ✓ Zone disabled
   - ✓ Fire drill
   - ✓ AC fail (after delay)
   - ✓ Zonal faults
   - ✓ Earth fault
   - ✓ Low battery
   - ✓ Telephone line fault
   - ✓ Notification Appliance Circuits fault
   - ✓ Communication trouble
   - ✓ Annunciator trouble
   - ✓ System off normal
4. Restoral Reports
   - ✓ Zone alarm
   - ✓ Supervisory
   - ✓ Zone(s) enabled
   - ✓ Fire drill
   - ✓ AC
   - ✓ Zone fault
   - ✓ Earth
   - ✓ Battery
   - ✓ Telephone line
   - ✓ Notification Appliance Circuits
   - ✓ Communication
   - ✓ Annunciator trouble
   - ✓ System off normal
5. 24 Hour Test (lowest priority)

Red LEDs are provided on the circuit board to identify which telephone line is activated. Also, a green LED labeled *Kissoff* will turn on whenever the control panel has successfully transmitted reports to the Central Station. The *Kissoff* LED may turn on several times during communications with a Central Station.

The table below shows UL listed receivers which are compatible with the ES-1000X.

	Format	Ademco 685 (1)	Ademco MX8000 (2)	Silent Knight 9500 (3)	Silent Knight 9800 (4)	Osborne Hoffman 2000E (5)	Radionics 6600 (6)	SurGard MLR2 (7)	SurGard System III (8)	SurGard MLR-2000 (9)	FBI CP220FB (10)	Honeywell Security AlarmNet 7810-ir
0	SIA-DCS-8		✓	✓	✓	✓	✓		✓		✓	
1	SIA-DCS-20		✓	✓	✓	✓	✓		✓		✓	
2	Ademco Contact ID	✓	✓	✓	✓	✓	✓	✓	✓	✓	✓	✓

Table 5.1 Compatible UL Listed Receivers

1. With 685-8 Line Card with Rev. 4.4d software
2. With 124060V206B and 124063 Line Card Rev. B
3. With version V2.4 Receiver and 126047 Line Card Rev. G
4. With 124077V2.00 Receiver and 126047 Line Card Rev. M
5. With V.7301 Receiver S/W
6. With 01.01.03 Receiver S/W and Line Card 01.01.03
7. With software V1.86
8. With software V1.72
9. With DSP4016 and V1.6 Line Card
10. With software V3.9

IMPORTANT! It is the installer's responsibility to ensure that the Digital Alarm Communicator/Transmitter is compatible with the Central Station Receiver, utilized by the monitoring service, prior to installation. The Compatibility Table provides a list of compatible receivers and associated software versions for the receivers. Changes in the hardware and/or software by the receiver manufacturers may affect the receiver compatibility with the FACP DACT. After completing the installation, communication between the DACT and Central Station Receiver must be tested and verified.

Section 6: FS-Tools Upload/Download

Important! The FACP will automatically reset 2 minutes after completion of a user program download via the FS-Tools programming utility. To prevent program corruption, the operator must wait until this panel reset occurs before performing any panel operations.

The control panel may be programmed or interrogated off-site via the public switched telephone network or locally using a USB cable. Any personal computer with Windows® 7 or NEWER 32 or 64 bit, with a 2400 baud compatible modem and Upload/Download software FS-Tools, may serve as a Service Terminal. This allows download of the entire program or upload of the entire program, history file, walktest data, current status, system voltages, time and date.

The control panel may also communicate to a local PC at the job-site. The PC must be connected to the USB connector J20 on the FACP main circuit board. A standard USB cable with male-A to male-A connectors, which must be purchased separately, is required.

Important: Remote modification of FACP programming requires that the panel be enabled for remote download (refer to "FS-Tools Upload/Download" on page 119). Remote interrogation of panel programming, history logs, detector status, etc., is possible without enabling the remote download option.

CAUTION: After successfully downloading a program, make certain to perform the following steps:

1. Print out all programmed data via Print Mode or manually view programmed entries and compare to intended program data
2. Test all affected panel operations
3. Immediately correct any problems found

6.1 FS-Tools Up/Download

NFPA 72 requirements state that a technician be on-site and at the control panel whenever the FS-Tools Programming Utility is used to download any information to the FACP. This applies to local and remote programming.The Remote Download option can be selected from the main menu screen as shown below after successful login:

```
      MAIN MENU
1=READ STATUS MODE
2=LOGIN
```

Select *2* to login to the panel.

```
   SELECT ACCOUNT
1=ADMINISTRATORS
2=USERS
3=NOT USED    *
```

Select *2* to login as a User.

```
    SELECT USER
1=USER 1
2=USER 2
3=USER 3
```

Select the appropriate User login ID:

```
LOGIN FOR USER X
ENTER PASSWORD
*******
```

Enter the User's ***Master*** level password. Only a user with master level programming rights can access FS-Tools Up/Downloads. The following screen will appear:

```
   MASTER MENU
1=PROGRAMMING MODE
2=FS-TOOL UP/DWNLOAD
3=USB UP/DOWNLOAD
```

Select *2* for FS-Tools Up/Download.

```
FS-TOOL UP/DOWNLOAD
1=ACCECPT UPLOAD
2=ACCEPT DOWNLOAD
```

Pressing *1* for *Accept Upload* will cause the following screen to be displayed:

```
*ALLOWING UPLOADS*
 IF YOU EXIT THIS
  SCREEN UPLOADS
 WILL BE DISABLED!
```

While this screen is displayed, programming uploads are allowed. Exiting this screen will disable any further downloads to the FACP. Also, following 30 minutes of inactivity (including up/downloading), the Accept Download screen will time-out, causing the display to return to the System Normal screen.

Pressing *2* for *Accept Download* will cause the following screen to be displayed:

```
*ALLOWING DOWNLOADS*
 IF YOU EXIT THIS
 SCREEN DOWNLOADS
 WILL BE DISABLED!
```

While this screen is displayed, programming downloads are allowed. Exiting this screen will disable any further downloads to the FACP. Also, following 30 minutes of inactivity (including up/downloading), the Accept Download screen will time-out, causing the display to return to the System Normal screen.

6.2 Transferring a Program

The first time that the control panel is downloaded, a secret code is loaded in by a Service Terminal. Future upload or download requests cause verification of the secret code by the control panel before processing of data is allowed. If the secret code is not verified, the control panel will terminate the request.

While the control panel is communicating with the Service Terminal, one of the DACT's red phone line active LEDs will turn on steady.

In order to download the panel, the following must be true:

- ✓ The control panel must be in the Normal Mode of operation. Downloading is not possible if the panel is in any other mode.
- ✓ There cannot be any active communications ongoing with a Central Station receiver.
- ✓ All active events must be successfully 'kissed-off' by the Central Station(s). The communicator must be in a standby state with no new information waiting to be transmitted to a Central Station.

6.2.1 Security Features

Upload and download with the control panel have been carefully designed to include key security features to ensure proper functionality. Any time a transfer is initiated, the control panel and the Service Terminal will communicate and transfer data before contacting a Central Station. When the data transfers are completed and the control panel disconnects from the Service Terminal, the control panel will call the Central Station and report one of the following conditions:

- Upload/Download request received
- Upload and/or Download request successful
- Upload/Download failed

The key features are listed and explained in the following sections.

Time-out at Control Panel

Upon answering an incoming call on the primary Central Station phone line, the control panel will listen for a modem connection signal. If this signal is not received within 50 seconds, the control panel will disconnect the call. Upon successful connection (secret code verified), if no communication occurs within 30 minutes, the panel will disconnect the call. Upon time-out, transfer activity will be reported to the Central Station (if enabled) and the connection will be terminated.

Error Checking

As each block of data is received by the control panel, it is checked for accuracy. If an error is detected, the block is retransmitted until correct, up to a maximum of four times. If the Secret Code is not verified and four errors occur, the call is disconnected and the report that the upload/download was not successful is called to the Central Station(s).

Central Station Data Protection

The primary and secondary Central Station phone numbers, communications format, account code, test time and programmable event codes are vital Central Station information. These blocks of data are protected from partial programming due to faulty phone connections, line noise and other errors. This prevents the panel from being confused due to a wrong phone number, account code, test time and most critical formatting errors.

Section 7: USB Upload/Download

Important! The FACP will automatically reset 2 minutes after completion of a user program download. To prevent program corruption, the operator must wait until this panel reset occurs before performing any panel operations.

CAUTION: After successfully downloading a program, make certain to perform the following steps:

1. Print out all programmed data via Print Mode or manually view programmed entries and compare to intended program data
2. Test all affected panel operations
3. Immediately correct any problems found

7.1 USB Upload/Download

NFPA 72 requirements state that a technician be on-site and at the control panel whenever the FS-Tools Programming Utility is used to download any information to the FACP. This applies to local and remote programming. For this reason, a new option has been added to the FACP which allows an individual at the FACP to enter a password and either enable the proprietary mode where downloading will be allowed at any time or access a specific password protected screen where downloading will be allowed regardless of the current proprietary setting.

The USB upload/download option allows for the transfer of programming information via a flash drive. The USB thumb drive must be in FAT32 file system format. This is typically the default format. Insert a USB flash drive into J20 on the bottom edge of the fire panel's circuit board. The USB Download option can be selected from the main menu screen after successful login as shown below:

```
      MAIN MENU
1=READ STATUS MODE
2=LOGIN
```

Select *2* to login to the panel.

```
    SELECT ACCOUNT
1=ADMINISTRATORS
2=USERS
3=NOT USED    ✳
```

Select *2* to login as a User.

```
    SELECT USER
1=USER 1
2=USER 2
3=USER 3
```

Select the appropriate User login ID:

```
LOGIN FOR USER X
ENTER PASSWORD
********
```

Enter the User's ***Master*** level password. Only a user with master level programming rights can access USB Up/Downloads. The following screen will appear:

```
    MASTER MENU
1=PROGRAMMING MODE
2=FS-TOOL UP/DWNLOAD
3=USB UP/DOWNLOAD
```

Pressing *3* for USB Up/Download while viewing the main menu will cause the following screen to be displayed:

```
 USB UP/DOWNLOAD
1=UPLOAD CONFIG
2=DOWNLOAD CONFIG
```

Pressing *1* for *Upload Program*, while viewing the USB Up/Download screen, will display the following.

```
    UPLOAD TO USB
FILENAME:
```

Using the keypad and arrow keys, enter a name for the current FACP configuration to save to the USB drive, and then press Enter.

The following screen will be displayed while the program is sent to the USB drive:

```
  USB UP/DOWNLOAD
SYSTEM CONFIGURATION
TRANSFER IN PROCESS
PLEASE WAIT
```

An error message will display if there is no USB drive inserted in the FACP or if there is an existing configuration saved on the drive with the same file name.

While this screen is displayed, USB programming uploads are allowed. Exiting this screen will disable any further uploads to a flash drive. Also, following 30 minutes of inactivity (including up/downloading), the Accept Upload screen will time-out, causing the display to return to the System Normal screen.

Similarly, the following screen will display when 2 for Download Program is pressed.

```
 DOWNLOAD FROM USB
FILE: FS_1000.cfg
1=NO
2=YES
```

Pressing *2* for *Yes* will cause the following screen to be displayed:

```
  USB UP/DOWNLOAD
SYSTEM CONFIGURATION
TRANSFER IN PROCESS
PLEASE WAIT
```

An error message will display if there is no USB drive inserted in the FACP or if there is no existing configuration saved on the USB drive.

While this screen is displayed, local programming downloads are allowed. Exiting this screen will disable any further downloads to a flash drive. Also, following 30 minutes of inactivity (including up/downloading), the Accept Download screen will time-out, causing the display to return to the System Normal screen.

Important!

The program database created by the FS-Tools programming utility will be called, “FS_1000.cfg” on the USB flash drive. Before loading the new database into the fire panel, the existing database will be saved as file, “FS_1000.bak” on the USB flash drive. Only one new and one saved database can reside on the USB flash drive.

Section 8: Firmware Upgrade

In order to supply the latest features and functionality in fire alarm and life safety technology to our customers, we make frequent upgrades to the embedded software in our products. To ensure that you are installing and programming the latest features, we strongly recommend that you download the most current version of software for each product from www.firelite.com prior to commissioning any system. Contact Technical Support with any questions about software and the appropriate version for a specific application.

8.1 Firmware Upgrade

The Firmware Upgrade option can be selected from the main menu screen after successful login as shown below:

```
      MAIN MENU
1=READ STATUS MODE
2=LOGIN
```

Select *2* to login to the panel.

```
   SELECT ACCOUNT
1=ADMINISTRATORS
2=USERS
3=NOT USED    ✳
```

Select *2* to login as a User.

```
    SELECT USER
1=USER 1
2=USER 2
3=USER 3
```

Select the appropriate User login ID:

```
LOGIN FOR USER X
ENTER PASSWORD
********
```

Enter the User's ***Master*** level password. Only a user with master level programming rights can access Firmware Update. The following screen will appear:

```
    MASTER MENU
1=PROGRAMMING MODE
2=FS-TOOL UP/DOWNLD
3=USB UP/DOWNLOAD
```

Master Menu Screen #1

```
    MASTER MENU
1=FIRMWARE UPDATE
```

Master Menu Screen #2

Pressing *1* for Firmware Upgrade while viewing Master Menu Screen #2 will cause the following screen to be displayed:

```
FIRMWARE UPDATE
BACKUP CONFIG
FILENAME:
```

Before updating, the panel will save the current configuration of the system to a flash drive. The USB thumb drive must be in FAT32 file system format. This is typically the default format. An error message will display if there is not enough free memory space on the flash drive. The panel will prompt the user to enter a filename. Once complete, the screen will display:

Insert the flash drive with the hardware upgrade downloaded from www.firelite.com into the USB port J20 on the bottom edge of the main panel circuit board. The firmware update file must be named EVO1000.skb.After the backup configuration screen, the following is displayed:

```
  FIRMWARE UPDATE
FILE: EVO1000.skb
1=NO
2=YES
```

Press *1* for *No* to cancel or *2* for *Yes* to continue with the panel upgrade. The following screen will display if *Yes* is selected.

```
  FIRMWARE UPDATE
    IN PROGRESS
    PLEASE WAIT
```

If the following error message displays, ensure the flash drive is inserted at J20 and it is fully seated.

```
  FIRMWARE UPDATE
NO USB CONNECITON
ESC TO EXIT OR ENTER
AFTER DEV CONNECTED
```

The following error message will display if the upgrade file is not found on the flash drive. Ensure the file is present and retry.

```
   FIRMARE UPDATE
FILE NOT FOUND
```

Section 9: Power Supply Calculations

9.1 Overview

This section contains instructions and tables for calculating power supply currents in alarm and standby conditions. This is a four-step process, consisting of the following:

1. Calculating the total amount of AC branch circuit current required to operate the system
2. Calculating the worst-case system current load on the control panel, when primary (AC) power is applied, to assure that the limit of the its internal power supply will not be exceeded. This considers the fire alarm condition only.
3. Calculating the total current load on the batteries (secondary power source) in the event of an AC power loss. This considers both standby and fire alarm conditions.
4. Calculating the size of the batteries required to support the system if AC power loss occurs, based on the total battery current load, plus a regulatory agency mandated derating factor.

9.2 Calculating the AC Branch Circuit

The control panel requires connection to a separate, dedicated AC branch circuit, which must be labeled **FIRE ALARM**. This branch circuit must connect to the line side of the main power feed of the protected premises. No other non-fire alarm equipment may be powered from the fire alarm branch circuit. The branch circuit wire must run continuously, without any disconnect devices, from the power source to the control panel. Overcurrent protection for this circuit must comply with Article 760 of the National Electrical Codes as well as local codes. Use 14 AWG (2.00 mm^2) wire with 600 volt insulation for this branch circuit.

Use Table 9.1, to determine the total amount of current, in AC amperes (A), that must be supplied to the system.

Device Type	Number of Devices		Current Draw (AC amps)		Total Current per Device
ES-1000X	1	X	3.50	=	
CHG-75	[ ]	X	2.05	=	
CHG-120F	[ ]	X	2.00	=	
	[ ]	X	[ ]	=	
	Sum Column for AC Branch Current Required			=	

Table 9.1 AC Branch Circuit Requirements

9.3 Calculating the System Current Load

9.3.1 Overview

The control panel's internal power supply must support all connected devices while primary (AC) power is applied. The continuous system current load is highest during a fire alarm condition. To calculate the fire alarm load on the internal power supply, use Calculation Column 1 in Table 9.3 on page 126.

The secondary power source (batteries) must be able to power the system under both standby and fire alarm conditions upon loss of primary (AC) power. To calculate the fire alarm load on the secondary power source, use Calculation Column 2 in Table 9.3 on page 126. To calculate the standby load on the secondary power source, use Calculation Column 3 in Table 9.3 on page 126.

All currents are given in amperes (A). Table 9.2 shows how to convert milliamperes and microamperes to full amperes.

To convert...	Multiply	Example
Milliamperes (mA) to amperes (A)	mA x 0.001	3 mA x 0.001 = 0.003A
Microamperes (µA) to amperes (A)	µA x 0.000001	300 µA x 0.000001 = 0.0003 A

Table 9.2 Converting to Full Amperes

9.3.2 How to Calculate System Current Load

Use Table 9.3 on page 126 to calculate current load as follows:

1. Enter the quantity of devices in all three columns.
2. Enter the current draw where required. Refer to the *Device Compatibility Document* and *SWIFT Manual* for compatible devices and their current draw.
3. Calculate the current draws for each in all columns.
4. Sum the currents for each column. This is the total load.
5. Verify that the total from Column 1 is less than or equal to the value specified in the note.
6. Copy the totals from Column 2 and Column 3 to Table 9.4 on page 127.

Table 9.3 contains columns for calculating current load. For each column, calculate the current and enter the total (in amperes) in the bottom row. When finished, copy the totals from Calculation Column 2 and Calculation Column 3 to Table 9.4 on page 127. For maximum output current available per circuit and per panel, refer to Section 1.2, "Specifications", on page 13.

Device Type	Calculation Column 1 Primary (AC) Power Source Fire Alarm Current (amps)			Calculation Column 2 Secondary (Battery) Power Source Fire Alarm Current (amps)			Calculation Column 3 Secondary (Battery) Power Source Standby Current (amps)		
	Qty	**X [current draw]=**	**Total**	**Qty**	**X [current draw]=**	**Total**	**Qty**	**X [current draw]=**	**Total**
Main Circuit Board[1]				1	X[0.123]=		1	X[0.238]=	
IPOTS-COM Communicator	[ ]	X[0.041]=		[ ]	X[0.041]=		[ ]	X[0.040]=	
SLC-3LS Loop Expander	[ ]	X[0.210]=		[ ]	X[0.210]=		[ ]	X[0.159]=	
TG7FS Communicator	[ ]	X[0.110]=		[ ]	X[0.110]=		[ ]	X[0.018]=	
HW-AV-LTE-M Communicator	[ ]	X[0.200]=		[ ]	X[0.200]=		[ ]	X[0.060]=	
ANN-80	[ ]	X[0.040]=		[ ]	X[0.040]=		[ ]	X[0.015]=	
ANN-100	[ ]	X[0.025]=		[ ]	X[0.025]=		[ ]	X[0.020]=	
ANN-(R)LED	[ ]	X[0.068]=		[ ]	X[0.068]=		[ ]	X[0.028]=	
ANN-RLY	[ ]	X[0.075]=		[ ]	X[0.075]=		[ ]	X[0.015]=	
ANN-I/O	[ ]	X[0.200]=		[ ]	X[0.200]=		[ ]	X[0.035]=	
ANN-S/PG	[ ]	X[0.045]=		[ ]	X[0.045]=		[ ]	X[0.045]=	
4XTMF	[ ]	X[0.011][2]=		[ ]	X[0.011]=		[ ]	X[0.005]=	
4-wire Detector Heads	[ ]	X[ ]=		[ ]	X[ ][3]=		[ ]	X[ ]=	
Power Supervision Relays[4]	[ ]	X[0.025]=		[ ]	X[0.025]=		[ ]	X[0.025]=	
AD350, AD355							[ ]	X[0.00030]=	
AD365							[ ]	X[0.00020]=	
BEAM355							[ ]	X[0.0020]=	
B501BH, B501BHT[5]							[ ]	X[0.001]=	
B224RB Relay Base							[ ]	X[0.00050]=	
B224BI Isolator Base							[ ]	X[0.00045]=	
C365							[ ]	X[0.00020]=	
CP350, CP355							[ ]	X[0.00030]=	
CSD365							[ ]	X[0.00020]=	
D350P, D350PL, D355PL							[ ]	X[0.00030]=	
D365PL							[ ]	X[0.00020]=	
D350RP, D350RPL							[ ]	X[0.00030]=	
H350, H355							[ ]	X[0.00030]=	
H365							[ ]	X[0.00020]=	
H350R, H355R							[ ]	X[0.00030]=	
H365R							[ ]	X[0.00020]=	
H355HT, H365HT	maximum alarm draw for all devices:			maximum alarm draw for all devices:			[ ]	X[0.00030]=	
OSI-RI-FL							[ ]	X[0.020]=	
SD350, SD355	with one (1) SLC Loop =		0.400	with one (1) SLC Loop =		0.400	[ ]	X[0.00030]=	
SD365	with two (2) SLC Loops =		0.800	with two (2) SLC Loops =		0.800	[ ]	X[0.00020]=	
SD355CO							[ ]	X[0.00030]=	
SD365CO	with three (3) loops =		1.200	with three (3) loops =		1.200	[ ]	X[0.00020]=	
SD350T, SD355T							[ ]	X[0.00030]=	
SD365T							[ ]	X[0.00020]=	
MMF-300							[ ]	X[0.00040]=	
MMF-300-10							[ ]	X[0.00350]=	
MDF-300							[ ]	X[0.00075]=	
MMF-301							[ ]	X[0.000375]=	
MMF-302							[ ]	X[0.00027]=	
MMF-302-6							[ ]	X[0.00200]=	
BG-12LX							[ ]	X[0.00030]=	
CMF-300							[ ]	X[0.00039]=	
CMF-300-6							[ ]	X[0.00225]=	
CRF-300							[ ]	X[0.00027]=	
CRF-300-6							[ ]	X[0.00145]=	
I300							[ ]	X[0.00040]=	
ISO-6							[ ]	X[0.00045]=	
W-GATE							[ ]	X[0.040] or [0.024][6]	
NAC #1[7]	[ ]	X[ ]=		[ ]	X[ ]=				
NAC #2[7]	[ ]	X[ ]=		[ ]	X[ ]=				
NAC #3[7]	[ ]	X[ ]=		[ ]	X[ ]=				
NAC #4[7]	[ ]	X[ ]=		[ ]	X[ ]=				
FL-PS (remote sync)	[ ]			[ ]					
Current Draw from TB3	[ ]	[ ]=		[ ]	[ ]=		[ ]	[ ]=	
Sum each column for totals	**AC Powered, Fire Alarm Load [8] =**			**Battery Powered, Fire Alarm Load = [9]**			**Battery Powered, Standby Load = [10]**		

Table 9.3 System Current Load Calculations

1 Main board with display only.
2 If using the Reverse Polarity Alarm output, add 0.005 amps; if using the Reverse Polarity Trouble output, add another 0.005 amps.

3 Refer to the Device Compatibility Document for standby current.
4 Must use compatible listed Power Supervision Relay.
5 Maximum alarm current for each sounder base is 0.015 amps which must be supplied by aux. 24VDC source.
6 When powered by an external source, use 0.040A. When powered by the SLC, use 0.024A.
7 If using Gentex brand NACs, the max number of devices for each NAC output is 35. The “UL Max” current rating, published in their data sheets, must be used in order to maintain performance under low battery conditions with the maximum wire resistances shown in Table D.2 on page 142.
8 Total Alarm current load cannot exceed 9.4 amps.
9 When AC power is initially applied to the panel and the battery is not fully charged, an initial charge current of up to 3.1 amps may be observed at the battery. This high current is only applied for a very short duration (milliseconds) and does not affect system load or battery size calculations.
10 Total Standby current load cannot exceed 3.9 amps.

9.4 Calculating the Battery Size

Use Table 9.4 to calculate the total Standby and Alarm load in ampere hours (AH). This total load determines the battery size (in AH), required to support the system upon loss of primary (AC) power. Complete Table 9.4 as follows:

1. Enter the totals from Table 9.3 on page 126, Calculation Columns 2 and 3 where shown
2. Enter the NFPA Standby and Alarm times (refer to ‘NFPA Requirements’ below)
3. Calculate the ampere hours for Standby and Alarm, then sum the Standby and Alarm ampere hours
4. Multiply the sum by the derating factor of 1.25 to calculate the proper battery size (in AH)
5. Write the ampere hour requirements on the Protected Premises label located inside the cabinet door

Total Standby Load, Battery Powered (from Table 9.3 Calculation Column 3) [ ]	Required Standby Time (24 hours) X[ ]	 = AH
Total Fire Alarm Load, Battery Powered (from Table 9.3 Calculation Column 2) [ ]	Required Alarm Time (for 5 min., enter 0.084, for 10 min., enter 0.168) X[ ]	 = AH
Sum of Standby and Alarm Ampere Hours		= AH
Multiply by the Derating Factor		X 1.25
Battery Size, Total Ampere Hours Required		= AH

Table 9.4 Total Secondary Power Requirements at 24 VDC

9.4.1 NFPA Battery Requirements

NFPA 72 Local, Proprietary, Central, Auxiliary and Remote Fire Alarm Systems require 24 hours of standby power followed by 5 minutes in alarm

9.4.2 Selecting and Locating Batteries

Select sealed lead acid batteries that meet or exceed the total ampere hours calculated in Table 9.4 . The control panel can charge batteries in the 18 AH to 55 AH range. The control panel cabinet is capable of housing batteries up to 26 AH. Batteries larger than 26 AH require a UL listed external battery charger and cabinet such as the BB-26, BB-55F, or other UL listed external battery cabinet.

Appendix A: Software Zones

A.1 Correlations

Setup and configuration of an addressable system is different than a conventional system. In a conventional system, assignment of input devices (smoke detectors, pull stations, heat detectors, etc.) to zones is accomplished through wiring. The wiring is direct from clearly marked panel terminals to any device assigned to a particular zone. Connection of output devices (horns, bells, strobes, etc.) in a conventional system is accomplished by direct wiring of the output devices to Notification Appliance Circuit terminals.

In an addressable system, a minimum of a single pair of wires (SLC communication loop) is used to connect all addressable input and output devices. Communications between the FACP (Fire Alarm Control Panel) and all addressable devices takes place over the wire pair which originates from the FACP. Software programming is used to configure the system as opposed to direct wiring. Zone assignments are created via software means, hence the term *software zones*.

Setup of an ES-1000X software zone is accomplished by panel programming. Each addressable device can be assigned to a maximum of five software zones. Each software zone, however, may have from 1 to 159[1] addressable input devices assigned to it and from 1 to 159[1] addressable output devices assigned to it.

Monitor and control modules comprise one group of 159[1] addresses, with each module having a unique address from 1 to 159[1]. Detectors comprise a separate group of 159[1] addresses, each detector having a unique address from 1 to 159[1] in its group. Be careful not to duplicate addresses within any one group (modules and detectors). Refer to the following page for an example of zoning.

In the example on the following page:

- Zone 001 has the following addressable devices assigned to it:
  - ✓ smoke detectors with addresses *001* and *002*
  - ✓ monitor module with address *001*
  - ✓ monitor module with address *002* and *003*
  - ✓ control modules with addresses *005*, *006*, *007*, *009* and *013*
- Zone 02 has the following addressable devices assigned to it:
  - ✓ monitor module with addresses *002* and *003*
  - ✓ smoke detectors with addresses *003* and *004*
  - ✓ control modules with addresses *008*, *009* and *010*
- Zone 03 has the following addressable devices assigned to it:
  - ✓ smoke detectors with addresses *005*, *006* and *007*
  - ✓ control module with address *004*
  - ✓ control modules with addresses *009*, 0*11* and 0*12*

The example points out some of the key assignment features of the ES-1000X. Addresses of detectors are not duplicated. Addresses of monitor and control modules are not duplicated. The control module with address 009 is assigned to three software zones (providing floor above and floor below). Be careful to properly plan the installation prior to installing any devices.

1. CLIP or Classic Loop Interface Protocol devices (modules and detectors) can only have unique addresses of 1 to 99. Newer LiteSpeed devices (modules and detectors) can have unique addresses of 1 to 159 which means each zone can have up to 159 input and output devices assigned to it.

Correlation of Input and Output Zones

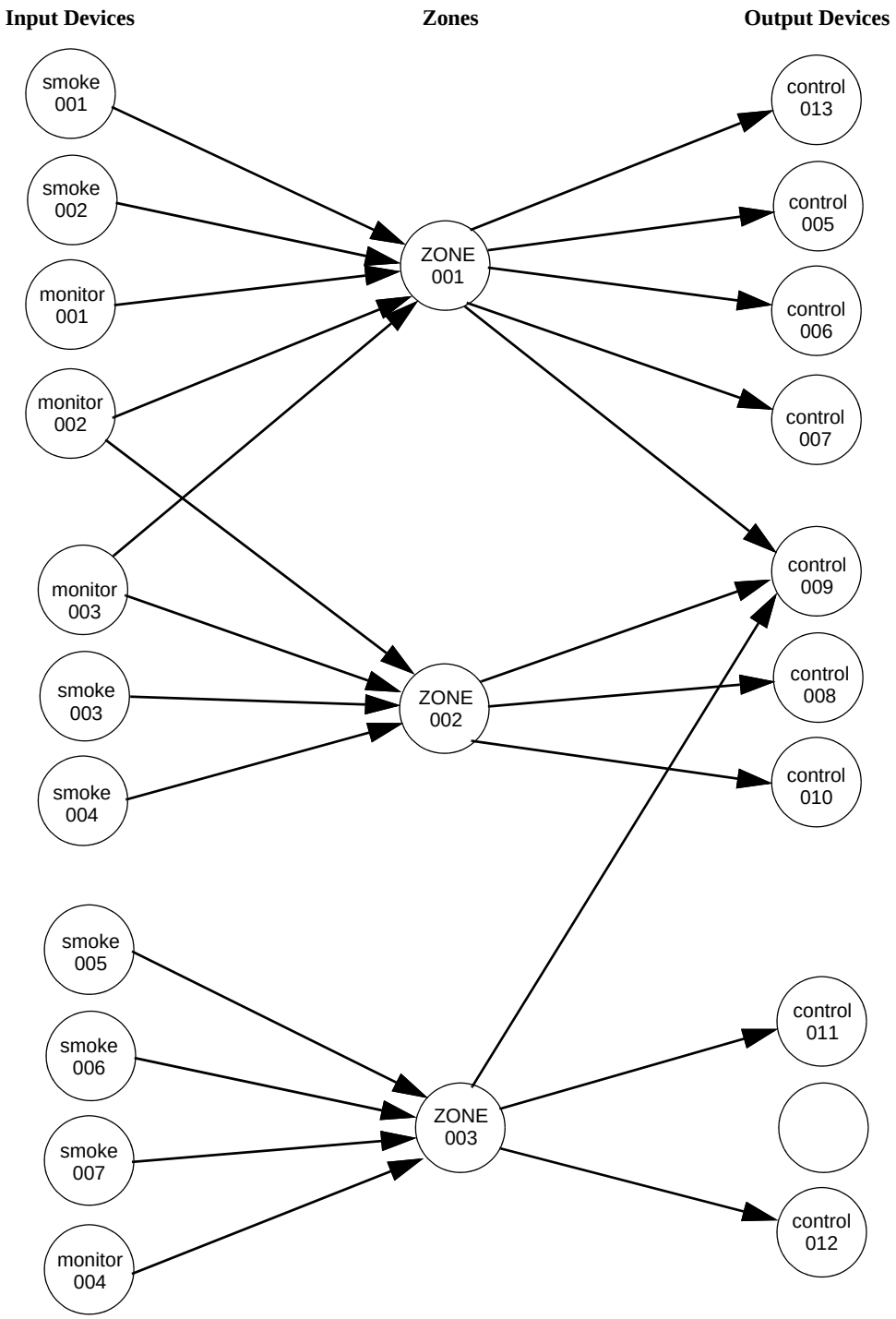

The zone correlations which are shown graphically above are also presented in Table A.1 on page 130 and Table A.2 on page 131.

DETECTOR ZONE ASSIGNMENT							
Address	**Device Type**	**Zone Number**	**ADJ/NOUN**	**Address**	**Device Type**	**Zone Number**	**ADJ/NOUN**
001	smoke	1	FIRST HALL	051			
002	smoke	1	ELEV. LOBBY	052			
003	smoke	2	2ND FLOOR	053			
004	smoke	2	ROOM 210	054			
005	smoke	3	3RD FLOOR	055			
006	smoke	3	MEZZANINE	056			
007	smoke	3	MECH. ROOM	057			
008				058			
009				059			
010				060			
011				061			
012				062			
013				063			
014				064			
015				065			
016				066			
017				067			
018				068			
019				069			
020				070			
021				071			
022				072			
023				073			
024				074			
025				075			
026				076			
027				077			
028				078			
029				079			
030				080			
031				081			
032				082			
033				083			
034				084			
035				085			
036				086			
037				087			
038				088			
039				089			
040				090			
041				091			
042				092			
043				093			
044				094			
045				095			
046				096			
047				097			
048				098			
049				099			
050				100			

Table A.1 Detector Programming Sheet Example

MONITOR/CONTROL MODULE ZONE ASSIGNMENT							
Address	**Device Type**	**Zone Number**	**ADJ/NOUN**	**Address**	**Device Type**	**Zone Number**	**ADJ/NOUN**
001	monitor	1		051			
002	monitor	1, 2		052			
003	monitor	1, 2		053			
004	monitor	3		054			
005	control	1		055			
006	control	1		056			
007	control	1		057			
008	control	2		058			
009	control	1, 2, 3		059			
010	control	2		060			
011				061			
012				062			
013				063			
014				064			
015				065			
016				066			
017				067			
018				068			
019				069			
020				070			
021				071			
022				072			
023				073			
024				074			
025				075			
026				076			
027				077			
028				078			
029				079			
030				080			
031				081			
032				082			
033				083			
034				084			
035				085			
036				086			
037				087			
038				088			
039				089			
040				090			
041				091			
042				092			
043				093			
044				094			
045				095			
046				096			
047				097			
048				098			
049				099			
050				100			

Table A.2 Module Programming Sheet Example

DETECTOR ZONE ASSIGNMENT							
Address	**Device Type**	**Zone Number**	**ADJ/NOUN**	**Address**	**Device Type**	**Zone Number**	**ADJ/NOUN**
001				051			
002				052			
003				053			
004				054			
005				055			
006				056			
007				057			
008				058			
009				059			
010				060			
011				061			
012				062			
013				063			
014				064			
015				065			
016				066			
017				067			
018				068			
019				069			
020				070			
021				071			
022				072			
023				073			
024				074			
025				075			
026				076			
027				077			
028				078			
029				079			
030				080			
031				081			
032				082			
033				083			
034				084			
035				085			
036				086			
037				087			
038				088			
039				089			
040				090			
041				091			
042				092			
043				093			
044				094			
045				095			
046				096			
047				097			
048				098			
049				099			
050				100			

Table A.3 Blank Detector Programming Sheet - 1 of 2

DETECTOR ZONE ASSIGNMENT							
Address	**Device Type**	**Zone Number**	**ADJ/NOUN**	**Address**	**Device Type**	**Zone Number**	**ADJ/NOUN**
101				151			
102				152			
103				153			
104				154			
105				155			
106				156			
107				157			
108				158			
109				159			
110							
111							
112							
113							
114							
115							
116							
117							
118							
119							
120							
121							
122							
123							
124							
125							
126							
127							
128							
129							
130							
131							
132							
133							
134							
135							
136							
137							
138							
139							
140							
141							
142							
143							
144							
145							
146							
147							
148							
149							
150							

Table A.3 Blank Detector Programming Sheet - 2 of 2

MONITOR/CONTROL MODULE ZONE ASSIGNMENT							
Address	**Device Type**	**Zone Number**	**ADJ/NOUN**	**Address**	**Device Type**	**Zone Number**	**ADJ/NOUN**
001				051			
002				052			
003				053			
004				054			
005				055			
006				056			
007				057			
008				058			
009				059			
010				060			
011				061			
012				062			
013				063			
014				064			
015				065			
016				066			
017				067			
018				068			
019				069			
020				070			
021				071			
022				072			
023				073			
024				074			
025				075			
026				076			
027				077			
028				078			
029				079			
030				080			
031				081			
032				082			
033				083			
034				084			
035				085			
036				086			
037				087			
038				088			
039				089			
040				090			
041				091			
042				092			
043				093			
044				094			
045				095			
046				096			
047				097			
048				098			
049				099			
050				100			

Table A.4 Blank Module Programming Sheet - 1 of 2

MONITOR/CONTROL MODULE ZONE ASSIGNMENT							
Address	**Device Type**	**Zone Number**	**ADJ/NOUN**	**Address**	**Device Type**	**Zone Number**	**ADJ/NOUN**
101				151			
102				152			
103				153			
104				154			
105				155			
106				156			
107				157			
108				158			
109				159			
110							
111							
112							
113							
114							
115							
116							
117							
118							
119							
120							
121							
122							
123							
124							
125							
126							
127							
128							
129							
130							
131							
132							
133							
134							
135							
136							
137							
138							
139							
140							
141							
142							
143							
144							
145							
146							
147							
148							
149							
150							

Table A.4 Blank Module Programming Sheet - 2 of 2

Appendix B: Default Programming

The following table provides a list of the programming options and their factory default settings.

Program Option	Factory Default	Program Option	Factory Default
Detector Programming	Not Installed	Battery Size	12-30AH
Detector Type	Smoke-Photo	Language	English
Detector Verification	Off	Aux Power 1 Class A	No
Detector Walktest	Yes	Aux Power 1 Resettable	No
Detector PAS	No	Aux Power 2 Resettable	No
Detector Presignal	No	Aux Power 3 Resettable	No
Detector Zone Assign.	000 only	Canadian Option	Off
Detector Adj/Noun	none	Waterflow Silenceable	No
Module Programming	Not Installed	Relay 1	Alarm
Module Type	Monitor	Relay 2	Trouble (fixed)
Module Walktest	Yes	Relay 3	Supervisory
Module Presignal	No	Communicator Installed	No
Module Zone Assign.	000 only	POTS, Ethernet Enabled	No
Module Adj/Noun	none	Ethernet Location ID	0000
Module Control Module Delay	No	Ethernet CS ID	0000
Module MNS Override	No	POTS, Ethernet Account Code	000000
Message	No Message	POTS Enabled	No
Zone Type	Monitor Zone	POTS Type	Touchtone
Zone 000-255	Enabled	POTS Supervised	No
Zone Installed	000	Gains Dialing	Normal
Special Purpose Zones 251-255	Off	Gains Reporting	Normal
Loop Class	Class B	DHCP Enabled	Yes
Loop Protocol	LITESPEED	Trouble Report Limit	0
Loop 1 Installed	Yes	Report Style	Point
Loop 2 Installed	No	Primary Account Code	000000
Loop 3 Installed	No	Secondary Account Code	000000
Trouble Reminder	24 Hr	Test Time	0100
Banner		Primary Phone Number	
Time Format	12 Hr	Secondary Phone Number	
Hours Setting	01	Primary Comm Format	Ademco Contact ID
Minutes Setting	00	Secondary Comm Format	Ademco Contact ID
Second Settings	00	ANN-Primary Enabled	No
AM-PM Setting	AM	ANN-Primary Modules Addr. 1 - 8	None
Month Setting	01	ANN-Secondary Enabled	No
Day Setting	01	ANN-Secondary Modules Addr. 1 - 8	None
Year Setting	23	ANN-S/PG Port	Serial
Daylight Savings	Enabled	ANN-S/PG Baud	9600
Month Start Daylight Savings	March	ANN-S/PG Data Bits	7
Week Start Daylight Savings	Week 2	ANN-S/PG Parity	Even
Month End Daylight Savings	November	ANN-S/PG Stop Bits	1
Week End Daylight Savings	Week 1	ANN-S/PG Offline Timer	N/A
AC Loss Delay	2	ANN-S/PG Printer Supervision	N/A
PAS Timer	0	ANN-80/100 Piezo Enabled	Yes
Presignal Timer	0	ANN-80/100 Lock Enabled	Yes
Waterflow Retard Timer	0	ANN-80/100 Acknowledge Button Enabled	Yes
Control Module Delay Timer	0	ANN-80/100 Silence Button Enabled	Yes
NAC 1,2,3, & 4 Enable	Enabled	ANN-80/100 Reset Button Enabled	Yes
NAC 1,2,3, & 4 Silenceable	Yes	ANN-80/100 Drill Button Enabled	Yes
NAC 1,2,3, & 4 Type	Synced Strobe	ANN-I/O Point/Zone	Zone
NAC 1,2,3, & 4 Sync Type	System Sensor	ANN-I/O Range	00-29
NAC 1,2,3, & 4 Autosilence	0	ANN-I/O Active LEDs Only	
NAC 1,2,3, & 4 Coding	Steady	ANN-RLY Relay 1	Zone 1
NAC 1,2,3, & 4 Zones	Zone 000 only	.....through.....	.....
NAC 1,2,3, & 4 Silence Inhibit	No	ANN-RLY Relay 10	Zone 10
NAC 1,2,3, & 4 MNS Override	No	ANN-LED Point/Zone	Zone
NAC 1,2,3, & 4 MNS Active	No	ANN-LED Alarms/ATS (Alarm, Trbl, Supv)	ATS
Charger Enabled	Yes	ANN-LED Range	0 - 9
4XTM Supervision	No	F1 - F4 function keys	Disabled
Remote Sync Enabled	Yes		

Appendix C: NFPA Standard-Specific Requirements

The ES-1000X has been designed for use in commercial, industrial, and institutional applications and meets the requirements for service under the National Fire Protection Association (NFPA) Standards outlined in this Appendix. The minimum system components required for compliance with the appropriate NFPA standard are listed below:

ES-1000X Control Panel

Contains the main control board, cabinet (backbox and door), main power supply transformer and power supply.

Batteries

Refer to “Power Supply Calculations” on page 125, for Standby Power Requirements.

Initiating Devices

Connected to one of the control panel's Initiating Device Circuits.

Notification Appliances

Connected to the control panel's Notification Appliance Circuits via a control module.

The following additional equipment is needed for compliance with the NFPA 72 standards listed below:

NFPA 72 NATIONAL FIRE ALARM STANDARDS FOR:

NFPA 72 Central Station Service (Protected Premises Unit) or Remote Station Service

Onboard Digital Alarm Communicator Transmitter for connection to a compatible listed Central Station DACR or Protected Premises Receiving Unit. This unit must be installed as outlined in “Components” on page 15.

OR

4XTMF Transmitter Module for connection to the RS82 Remote Station Receiver. See Figure C.2, “Remote Station Connection Using 4XTMF Module,” on page 138, for installation instructions for this unit.

NFPA 72 Auxiliary Fire Alarm System

4XTMF Transmitter Module for connection to a compatible listed Local Energy Municipal Box. This unit must be installed as illustrated in the section titled “4XTMF Transmitter Module Installation” on page 29 and as outlined in Figure C.1, “Municipal Box Connected to 4XTMF Transmitter Module” on page 137.

NFPA 72 Proprietary Fire Alarm System

ES-1000X Alarm, Trouble and Supervisory contacts connected to Transmitter(s). See Figure C.3, “Proprietary Protective Signaling System,” on page 139, for installation instructions for this unit.

NFPA 72 Auxiliary Fire Alarm System

All connections are power-limited and supervised. This application is not suitable for separate transmission of sprinkler supervisory or trouble conditions.

Notes:

1. 3 ohms maximum loop resistance allowed for wiring from control panel to Municipal Box.
2. Enable 4XTMF supervision in FACP System Setup programming. Refer to page 77 for more information.
3. Slide SW2 to the down position on the ES-1000X main circuit board to enable FACP Supervisory relay. See page 10 for location of SW2.
4. Refer to “4XTMF Transmitter Module Installation” on page 29 for detailed information.

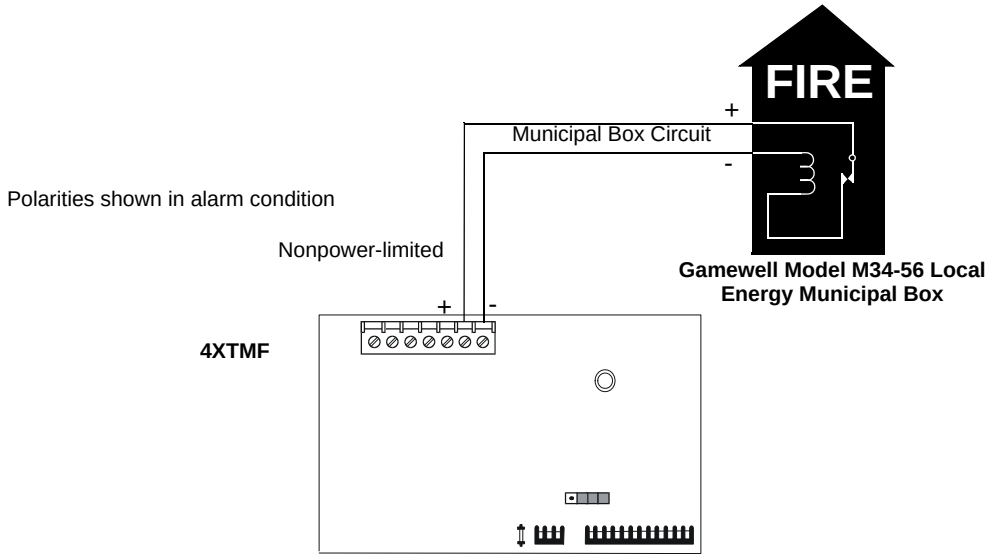

Figure C.1 Municipal Box Connected to 4XTMF Transmitter Module

NFPA 72 Remote Station Protective Signaling System

Notes:

1. Enable 4XTMF supervision in FACP System Setup programming. Refer to page 77 for more information.
2. Refer to “4XTMF Transmitter Module Installation” on page 29 for detailed information.

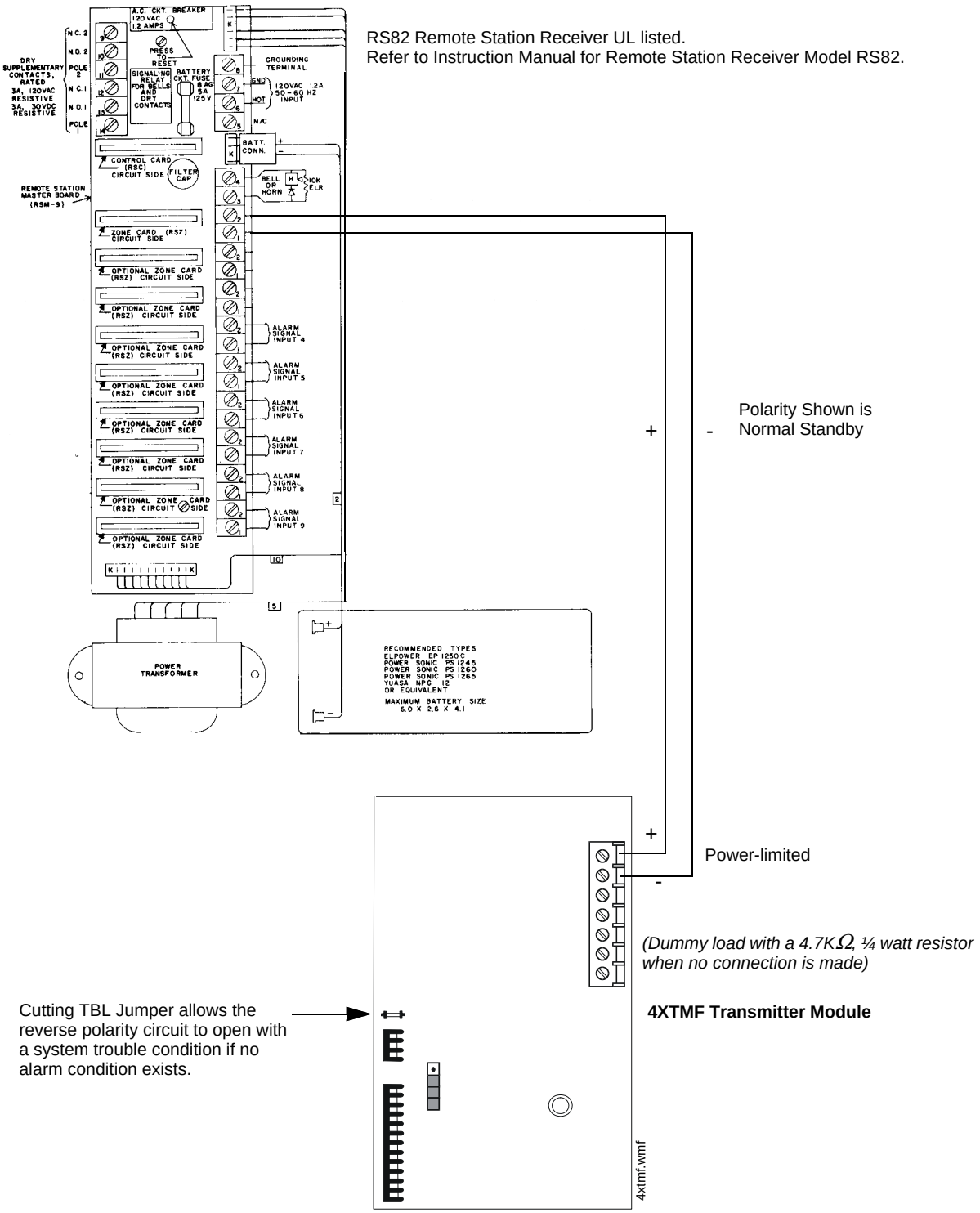

Figure C.2 Remote Station Connection Using 4XTMF Module

NFPA 72 Proprietary Protective Signaling Systems

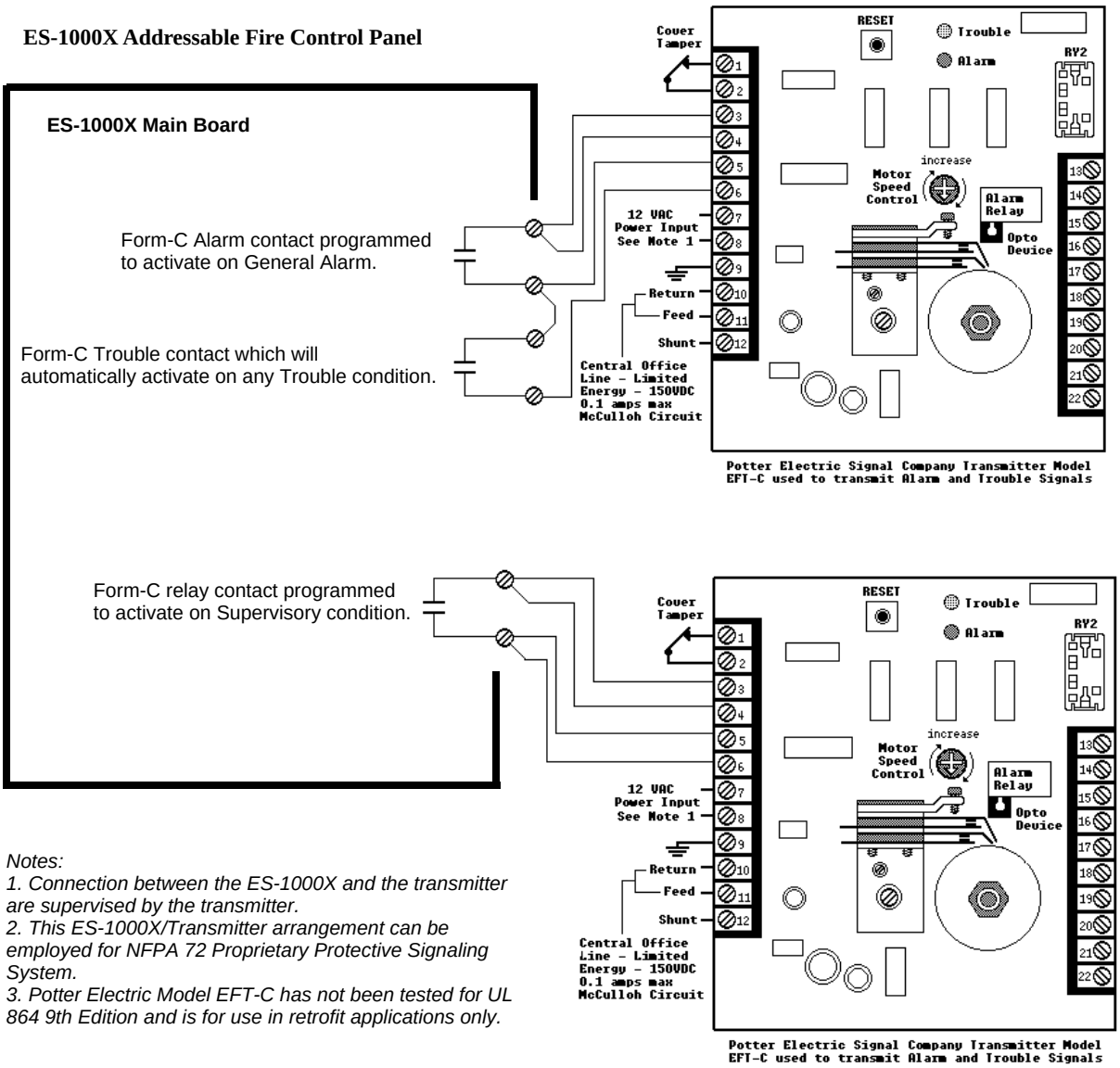

Notes:
1. Connection between the ES-1000X and the transmitter are supervised by the transmitter.
2. This ES-1000X/Transmitter arrangement can be employed for NFPA 72 Proprietary Protective Signaling System.
3. Potter Electric Model EFT-C has not been tested for UL 864 9th Edition and is for use in retrofit applications only.

Figure C.3 Proprietary Protective Signaling System

C.1 MBT-1 Municipal Box Trip - Silenceable

The following figure illustrates the connection of the MBT-1 (Municipal Box Trip) between the FACP and a Local Energy Municipal Box. The use of an addressable control module programmed for *General Alarm* and *Silenceable* allows silencing of the Municipal Box without resetting the panel or box.

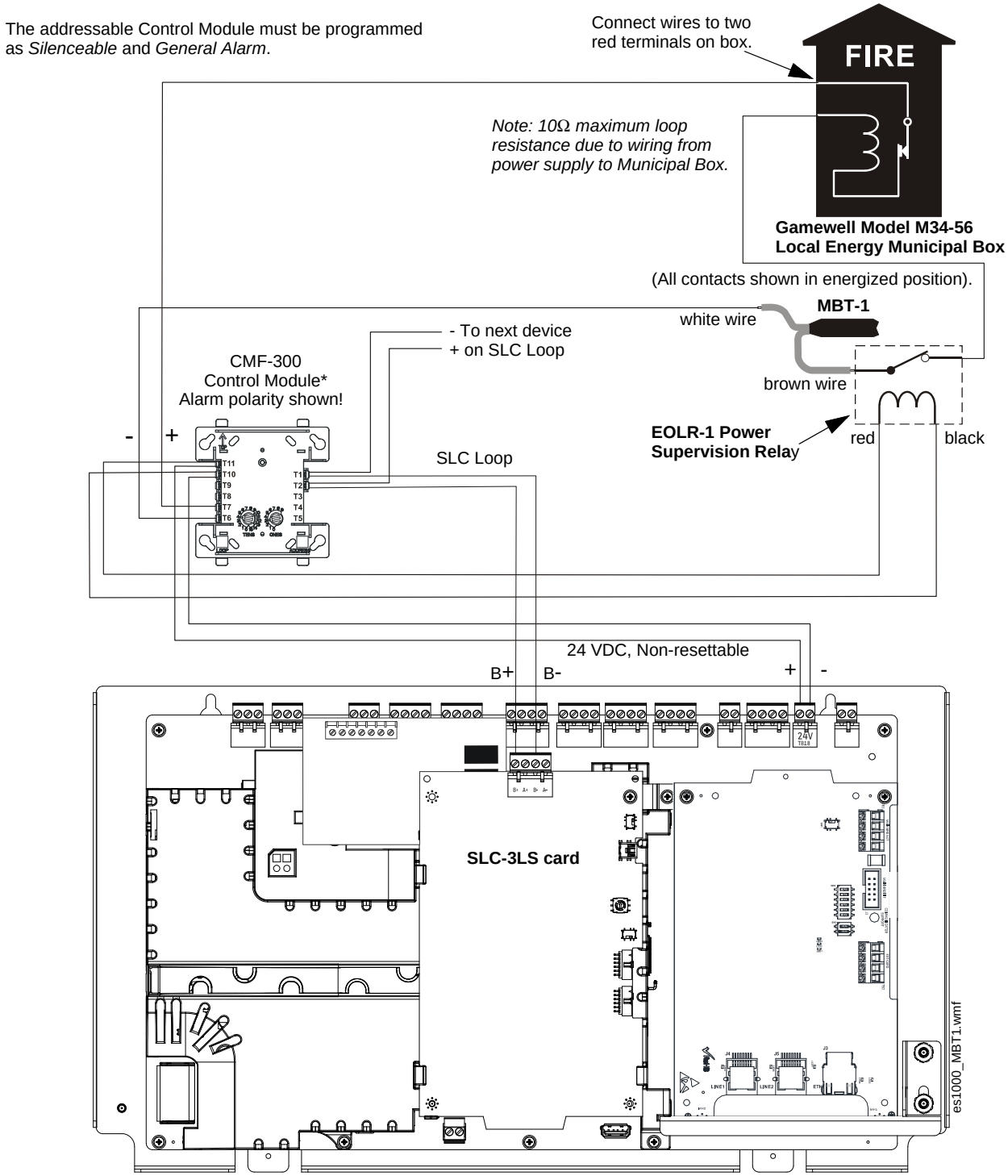

*If the SLC device does not match the one in this figure, refer to the SLC manual wiring conversion charts for legacy and newer versions of the modules.

Figure C.4 MBT-1 Silenceable

Appendix D: Wire Requirements

T-tapping of the SLC loop wiring is allowed for 2-wire (Class B) configurations. The total resistance of any branch cannot exceed 50 ohms. The total wire length of all branches cannot exceed 10,000 feet (3,000 m).

Connecting external system accessories to the ES-1000X main circuits must be carefully considered to ensure proper operation. It is important to use the correct type of wire, gauge and run length for each ES-1000X circuit. Reference the chart below to specify wire requirements and limitations for each ES-1000X circuit.

Note:

1. If the SLC loop is to be run in conduit with Notification Appliance Circuits, the risk of encountering problems can be greatly reduced by exclusively employing electronic sounders instead of more electronically noisy notification appliances such as electromechanical bells or horns.
2. The SLC can be programmed to operate in LiteSpeed mode (factory default setting) for a quicker device response time. While shielded wire is not required in LiteSpeed mode, it is recommended that all SLC wiring be twisted-pair to minimize the effects of electrical interference. Use the following table to determine the specific wiring requirements for the SLC when unshielded wire is used:

Refer to Table D.1 on page 141 and Table D.2 on page 142 for wiring requirements.

CIRCUIT CONNECTIONS		WIRE REQUIREMENTS		
Circuit Type	**Circuit Function**	**Wire Type and Limitations**	**Recommended Max. Distance Feet (meters)**	**Wire Gauge and Compatible Brands**
SLC loop (power-limited)	Connects to Addressable Devices CLIP MODE	Twisted, shielded pair 50 ohms maximum per length of Class A loops. 50 ohms per branch maximum for Class B loops	12,500 (3,750 m) 10,000 (3,000 m) 6,090 (1,810 m) 4,030 (1,225 m)	12 AWG (3.25 mm^2): Genesis 4410, Signal 98230, Belden 9583, WPW999 14 AWG (2.00 mm^2):Genesis 4408 & 4608 Signal 98430, Belden 9581, WPW995 16 AWG (1.30 mm^2): Genesis 4406 & 4606 Signal 98630, Belden 9575, WPW991 Direct Burial Cable Isotec NP713110VNQ-S 18 AWG (0.75 mm^2): Genesis 4402 & 4602 Signal 98300, Belden 9574, WPW975 Direct Burial Cable Isotec NP714110VNQ-S
	Connects to Addressable Devices LITESPEED MODE	Twisted, unshielded pair 50 ohms maximum per length of Class A loops. 50 ohms per branch maximum for Class B loops	12,500 (3,750 m) 10,000 (3,000 m) 6,090 (1,810 m) 4,030 (1,225 m)	12 AWG (3.25 mm^2): Belden 5020UL & 6020UL, Genesis WG-4315 & WG-4515 14 AWG (2.00 mm^2):Belden 5120UL & 6120UL, Genesis WG-4313 & WG-4513 16 AWG (1.30 mm^2): Belden 5220UL & 6220UL, Genesis WG-4311 & WG-4511 18 AWG (0.75 mm^2): Belden 5320UL & 6320UL, Genesis WG-4306 & WG-4506
		Untwisted, unshielded pair[1]	3,000 (900 m)	12-18 AWG (3.25 - 0.75 mm^2) using listed wire
ANN-BUS (EIA-485) (power-limited)	Connects to annunciator modules/	Twisted pair Maximum loop wire resistance is 2 ohms for power and 40 ohms for data	6,000 (1,800 m)	Refer to “ANN-BUS Wiring” on page 30 for information on device wiring
monitor module (power-limited)	Initiating Device Circuit: Contact Closure	Maximum loop wire resistance is 1500 ohms	2,500 (760 m)	12-18 AWG (3.25 - 0.75 mm^2)
monitor module (power-limited)	Initiating Device Circuit: Two-wire Modules	No more than a 2.4 volt drop allowed at end of circuit. Maximum loop wire resistance is 25 ohms	2,500 (760 m)	12-18 AWG (3.25 - 0.75 mm^2)
control module (power-limited)	Notification Appliance Circuit	In alarm, no more than a 1.2 volt drop allowed at end of circuit	Distance limitation set by 1.2 volt maximum line drop	12-18 AWG (3.25 - 0.75 mm^2)
Remote Sync Output	Provides strobe and normal sync for remote NAC power supplies	Untwisted, unshielded pair wire	Distance set by 295 ohm resistance limitation	12-18 AWG (3.25 - 0.75 mm^2)

Table D.1 FACP Wire Specifications

1 When using untwisted, unshielded wire, full conduit is recommended for optimum EMI/RFI protection.

D.1 NAC Wiring

The following table lists NAC wiring requirements for the FACP.

NAC Load (Amps)	Max. allowable total loop resistance (ohms)	**CLASS-B** Max. allowable wire pair length (feet)				**CLASS-A** Max. allowable wire pair length (feet)			
		AWG 12 solid	AWG 14 solid	AWG 16 solid	AWG 18 solid	AWG 12 solid	AWG 14 solid	AWG 16 solid	AWG 18 solid
0.25	12	3780	2380	1495	940	1890	1190	748	470
0.5	6	1890	1200	750	470	945	600	375	235
0.75	4	1260	800	500	314	630	400	250	157
1	3	945	595	375	235	473	298	188	118
1.25	2.4	760	478	300	188	380	239	150	94
1.5	2	630	400	250	158	315	200	125	79
1.75	1.71	540	340	234	134	270	170	107	67
2	1.5	475	298	187	118	238	149	94	59
2.25	1.33	420	264	166	105	210	132	83	53
2.5	1.2	380	240	150	94	190	120	75	47
2.75	1.09	345	216	136	86	173	108	68	43
3	1	320	200	125	79	160	100	63	40

Table D.2 NAC Wiring Requirements for FACP

Notes:

1. Calculations are based on Direct-Current Resistance data for **uncoated copper wire**, per National Electrical Code (2011 Edition) Table 8, Conductor Properties.
2. These distances reflect the worst case scenario and are based on the current draw of the highest candela strobes at the low end of the supported NAC voltage with the entire load at the end of the circuit. Further distances can be achieved by performing a point-to-point voltage calculation that more accurately reflects the specific devices used and how they are dispersed on the circuit.
3. If using Gentex brand notification appliances, the “UL Max” current rating published in their data sheets, must be used in order to maintain performance under low battery conditions with the maximum wire resistances shown in the table above.

Appendix E: HVAC Control

The FACP can be programmed to shut down a building's HVAC fans in the event of a fire. The fans cannot be restarted until the fire alarm condition has been cleared and the FACP has been reset to a normal (non-alarm) condition.

IMPORTANT! This HVAC feature is *not* to be used for smoke control. It is only designed to shut down fans during a fire alarm condition.

E.1 Control Module Operation

E.1.1 HVAC SHUTDOWN

The **HVAC SHUTDOWN** type code can be assigned to any addressable control module for the purpose of shutting down HVAC fans during a fire alarm, duct supervisory, photo supervisory, CO alarm, or CO supervisory condition. Devices connected to a relay module with this type code are unsupervised. Devices connected to a NAC module with this type code are supervised. To program this feature in the FACP:

- Program the **HVAC SHUTDN RLY** or **HVAC SHUTDN NAC** type code to the control module which will be used to shut down the fans (refer to *Type* under the section titled "Edit Module Screen for Control Modules" on page 61).
- Program the control module to a software zone and program fire alarm, duct supervisory, photo supervisory, CO alarm, or CO supervisory input devices which, when activated are to cause fan shutdown, to the same software zone (refer to *Zone Assignment* under the section titled "Edit Module Screen for Control Modules" on page 61).
- If using a relay control module (CRF-300) for HVAC shutdown, monitor the state of the control module using an addressable monitor module programmed for *Trouble Monitor*. (Refer to Type Monitor under section titled "Edit Module Screen for Monitor Module" on page 57.) The monitor module's display label must be programmed to display HVAC SHUTDOWN. When a shutdown event occurs, the control module will both shut down the fans and activate the monitor module. When the control module is active, the monitor module will indicate a trouble condition at the FACP along with the label HVAC SHUTDOWN.

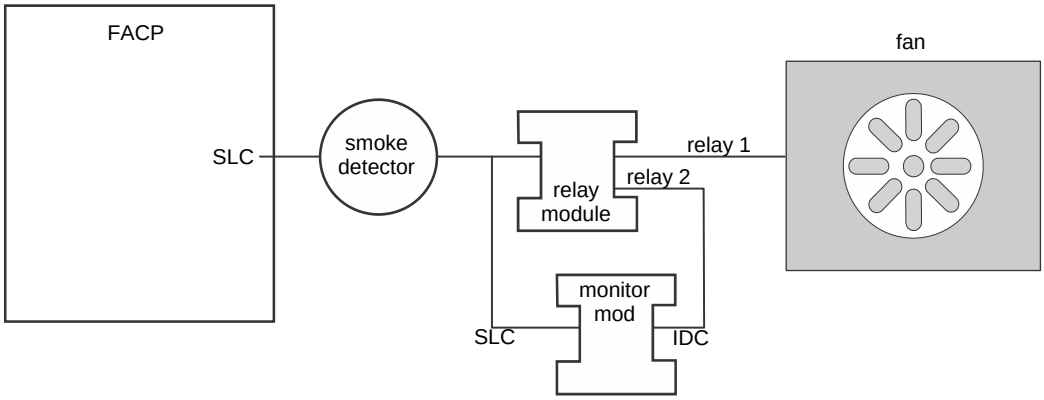

Figure E.1 HVAC RLY Shutdown

- If using a NAC control module (CMF-300) for HVAC shutdown, monitor the state of the control module using an addressable monitor module programmed for *Trouble Monitor* and a MR Series relay (MR-101CR). (Refer to Type Monitor under section titled "Edit Module Screen for Monitor Module" on page 57.) The monitor module's display label must be programmed to display HVAC SHUTDOWN. When a shutdown event occurs, the control module will activate the MR Series relay which in turn will both shut down the fans and activate the monitor module. When the control module and MR series relay are active, the monitor module will indicate a trouble condition at the FACP along with the label HVAC SHUTDOWN. Note that the 24 VDC power used by the control module must be supervised using another addressable monitor module and a EOLR-1 power supervision relay.

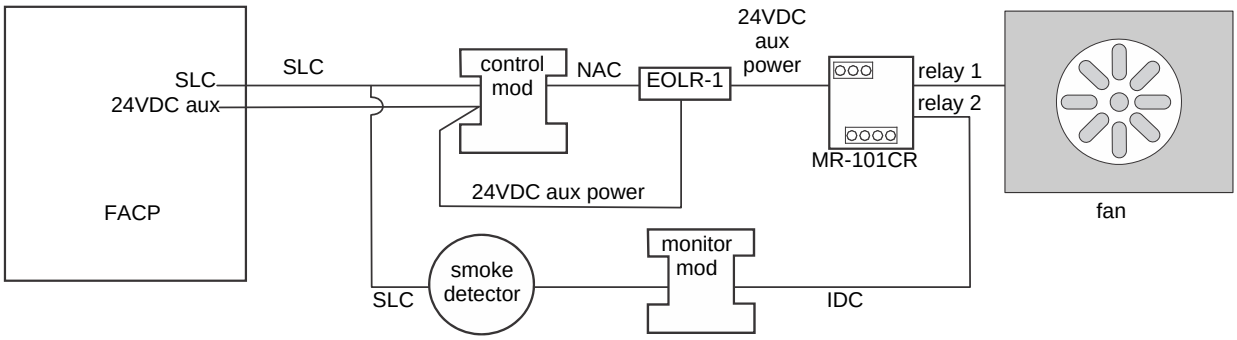

Figure E.2 HVAC NAC Shutdown

Once activated, the HVAC SHUTDOWN control module remains activated, even if the FACP is silenced or reset. After all the fire alarm, duct supervisory, photo supervisory, CO alarm, and CO supervisory condition on the FACP have been cleared and the panel reset, the HVAC SHUTDOWN control module remains activated and the fans remain off. The fans can only be restarted when the HVAC SHUTDOWN control module is deactivated by the HVAC RESTART module.

E.2 Monitor Module Operation

E.2.1 HVAC RESTART

The **HVAC RESTART** type code can be assigned to any addressable monitor module for the purpose of resetting (deactivating) the HVAC SHUTDN control module and turning the fans back on. The **HVAC RESTART** monitor module acts globally throughout the FACP system and therefore is not programmed to a particular software zone. To program this feature in the FACP:

- Program the **HVAC RESTART** type code to the monitor module which will be used to deactivate the HVAC SHUTDN control module and restart the fans (refer to Type Monitor under the section titled "Edit Module Screen for Monitor Module" on page 57).

The HVAC RESTART monitor module does not latch when activated. Pressing a switch connected to the monitor module will deactivate the HVAC SHUTDN control module *only if the event(s) that triggered the shutdown have been cleared.* The HVAC SHUTDN control module can be deactivated if trouble conditions exist on the FACP.

E.2.2 HVAC OVRRIDE

The **HVAC OVRRIDE** type code can be assigned to any addressable monitor module for the purpose of overriding or preventing the HVAC SHUTDN control modules from activating. The **HVAC OVRRIDE** monitor module acts globally throughout the FACP system and therefore is not programmed to a particular software zone. To program this feature in the FACP:

- Program the **HVAC OVRRIDE** type code to the monitor module which will be used to override the HVAC SHUTDN control module and prevent the fans from turning off (refer to Type Monitor under the section titled "Edit Module Screen for Monitor Module" on page 57).

The HVAC OVRRIDE monitor module does not latch when activated. Activating a switch connected to the monitor module will override all HVAC SHUTDN control relay modules in the system, preventing the HVAC SHUTDN modules from activating and causing the FACP LCD to display an active HVAC OVRRIDE module and turn on the Supervisory LED. Releasing the switch will allow the HVAC SHUTDN control relay modules to activate with subsequent events, turning off the fans.

As an example, pressing the HVAC OVRRIDE switch with no fire alarms, duct supervisories, photo supervisories, CO alarms, or CO supervisories in the system will prevent the fans from being turned off when an alarm does occur. As long as the switch is activated, the fans will not shutdown for any alarms. If the system is still in alarm/supervisory condition when the switch is released, the fans will not shutdown unless another alarm/supervisory event occurs after the switch is released.

Important! If an alarm/supervisory event exists in the system and HVAC Shutdown has already occurred, HVAC OVRRIDE will have no effect on the HVAC SHUTDN control relay modules. HVAC OVRRIDE will prevent HVAC Shutdown from occurring only if it is initiated prior to an alarm/supervisory condition.

NOTE: Activation of the HVAC OVRRIDE module causes a supervisory event that will be communicated to the Central Station if enabled.

Appendix F: Ademco Contact ID Format Event Code Descriptions

This appendix describes the various Event Codes and their messages which are available for the Ademco Contact ID Format.

F.1 Transmission Format Between DACT and Receiver

The transmission string for the Ademco Contact ID Format is as follows:

SSSS 18 QXYZ GG CCC where

SSSS=	Four digit Subscriber ID Account Code
18=	Identifies transmission as Contact ID to the receiver at the Central Station
Q=	Event Qualifier where 1 = New Event and 3 = New Restore
XYZ=	Event code
GG=	Group number
CCC=	Zone/Point number

Notes:

1. **18**, which is used in the reporting structure to identify the transmission as Contact ID, is not printed out in the alarm and trouble report.
2. **GG** Group Number is fixed at '00'.
3. **CCC** for Zone or Point Number:
   - ✓ Zone Number is transmitted as ‘01’ for zone 1 up to ‘256’ for zone 256
   - ✓ Point Number is transmitted as ‘01’ for point/address 1 up to ‘954’ for point/address 954

F.2 Ademco Contact ID Typical Printout

A typical printout from a Central Station receiver (such as the Ademco 685) of alarm and trouble reports in the Ademco Contact ID Reporting Structure follows:

Time	Date	Rcvr/Line ID	SSSS	QXYZ	GG	CCCC
11:28	03/25	11	7777	E110	00	C001 - general fire alarm on zone one
11:28	03/25	11	7777	E111	00	C002 - smoke detector alarm on zone two
11:28	03/25	11	7777	E380	00	C003 - fault on zone three
11:28	03/25	11	7777	E570	00	C009 - Zone nine disabled
11:28	03/25	11	7777	R110	00	C001 - Zone one alarm restored
11:28	03/25	11	7777	R111	00	C002 - smoke detector zone two restored
11:28	03/25	11	7777	R380	00	C003 - zone three fault restored
11:28	03/25	11	7777	R570	00	C009 - zone nine reenabled
11:28	03/25	11	7777	E158	00	C006 - high temperature, zone six
11:28	03/25	11	7777	E151	00	C007 - gas detected, zone seven

Notes:

1. **11** is an example of a Receiver/Line Card, showing which receiver and line card the message was transmitted to.
2. **Q**, which is the Event Qualifier for the reporting structure, is printed out in the report as an E for New Event or R for New Restore.

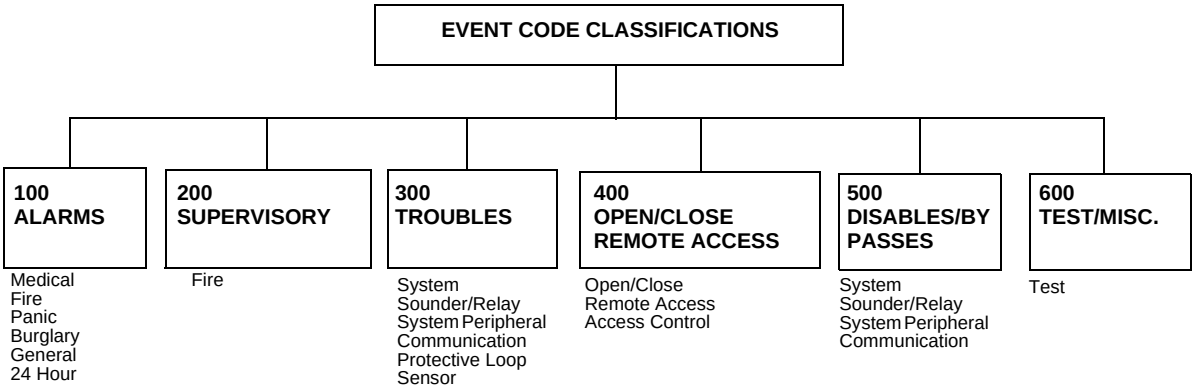

EVENT	MESSAGE
Medical Alarms - 100	
100 Medical	EMERG - Personal Emergency - #
101 Pendant Transmitter	EMERG - Personal Emergency - #
102 Fail to report in	EMERG - Fail to Check-in - #
Fire Alarms - 110	
110 Fire Alarm	FIRE - Fire Alarm - #
111 Smoke	FIRE - Smoke Detector - #
112 Combustion	FIRE - Combustion - #
113 Waterflow	FIRE - Waterflow - #
114 Heat	FIRE - Heat Sensor - #
115 Pull Station	FIRE - Pull Station - #
116 Duct	FIRE - Duct Sensor - #
117 Flame	FIRE - Flame Sensor - #
118 Near Alarm	FIRE - Near Alarm - #
Panic Alarms - 120	
120 Panic Alarm	PANIC - Panic - #
121 Duress	PANIC - Duress - #
122 Silent	PANIC - Silent Panic - #
123 Audible	PANIC - Audible Panic - #
Burglar Alarms - 130	
130 Burglary	BURG - Burglary - #
131 Perimeter	BURG - Perimeter - #
132 Interior	BURG - Interior - #
133 24-Hour	BURG - 24-Hour
134 Entry/Exit	BURG - Entry/Exit - #
135 Day/Night	BURG - Day/Night - #
136 Outdoor	BURG - Outdoor - #
137 Tamper	BURG - Tamper - #
General Alarms - 140	
140 General Alarm	ALARM - General Alarm - #
141 Polling loop open	ALARM - Polling Loop Open - #
142 Polling loop short	ALARM - Polling Loop Short - #
143 Expansion module failure	ALARM - Exp. Module Fail - #
144 Sensor tamper	ALARM - Sensor Tamper - #
145 Expansion module tamper	ALARM - Exp. Module Tamper - #
24-Hour Non-Burglary - 150 and 160	
150 24-Hour Non-Burg	ALARM - 24-Hr. Non-Burg - #
151 Gas detected	ALARM - Gas Detected - #
152 Refrigeration	ALARM - Refrigeration - #
153 Loss of heat	ALARM - Heating System - #
154 Water leakage	ALARM - Water Leakage - #
155 Foil break	ALARM - Foil Break - #

EVENT	MESSAGE
156 Day trouble	ALARM - Day Zone - #
157 Low bottled gas level	ALARM - Low Gas Level - #
158 High Temp	ALARM - High Temperature - #
159 Low Temp	ALARM - Low Temperature - #
161 Loss of air flow	ALARM - Air Flow - #
Fire Supervisory - 200 and 210	
200 Fire supervisory	SUPER. - Fire Supervisory - #
201 Low water pressure	SUPER. - Low Water Pressure - #
202 Low CO2	SUPER. - Low CO2
203 Gate valve sensor	SUPER. - Gate Valve - #
204 Low water level	SUPER. - Low Water Level - #
205 Pump activated	SUPER. - Pump Activation - #
206 Pump failure	SUPER. - Pump Failure - #
System Troubles - 300 and 310	
300 System trouble	TROUBLE - System Trouble
301 AC loss	TROUBLE - AC Power
302 Low system battery	TROUBLE - System Low Battery
303 RAM checksum bad	TROUBLE - RAM Checksum (restore not applicable)
304 ROM checksum bad	TROUBLE - ROM Checksum (restore not applicable)
305 System reset	TROUBLE - System Reset (restore not applicable)
306 Panel program changed	TROUBLE - Prog. Change (restore not applicable)
307 Self-test failure	TROUBLE - Self Test Failure
308 System shutdown	TROUBLE - System Shutdown
309 Battery test failure	TROUBLE - Battery Test Failure
310 Ground fault	TROUBLE - Ground Fault - #
311 No battery	TROUBLE - No Battery
Sounder/Relay Troubles - 320	
320 Sounder/Relay	TROUBLE - Sounder/Relay - #
321 Bell 1	TROUBLE - Bell/Siren #1
322 Bell 2	TROUBLE - Bell/Siren #2
323 Alarm relay	TROUBLE - Alarm Relay
324 Trouble relay	TROUBLE - Trouble Relay
325 Reversing relay	TROUBLE - Reversing Relay
326 Bell 3	TROUBLE - Bell/Siren #3
327 Bell 4	TROUBLE - Bell/Siren #4
System Peripheral Troubles - 330 and 340	
330 System peripheral	TROUBLE - Sys. Peripheral - #
331 Polling loop open	TROUBLE - Polling Loop Open
332 Polling loop short	TROUBLE - Polling Loop Short
333 Expansion module failure	TROUBLE - Expansion Module Failure - #
334 Repeater Failure	TROUBLE - Repeater Failure - #
335 Local printer paper out	TROUBLE - Printer Paper Out
336 Local printer failure	TROUBLE - Local Printer

EVENT	MESSAGE	
Communication Troubles - 350 and 360		
350 Communication	TROUBLE - Communication Trouble	
351 Telco 1 fault	TROUBLE - Phone Line #1	
352 Telco 2 fault	TROUBLE - Phone Line #2	
353 Long range radio transmitter fault	TROUBLE - Radio Transmitter	
354 Fail to communicate	TROUBLE - Fail to Communicate	
355 Loss of radio supervision	TROUBLE - Radio Supervision	
356 Loss of central polling	TROUBLE - Central Radio Polling	
Protection Loop Troubles - 370		
370 Protection loop	TROUBLE - Protection Loop - #	
371 Protection loop open	TROUBLE - Protection Loop Open - #	
372 Protection loop short	TROUBLE - Protection Loop Short - #	
373 Fire trouble	TROUBLE - Fire Loop - #	
Sensor Troubles - 380		
380 Sensor trouble	TROUBLE - Sensor Trouble - #	
381 Loss of supervision - RF	TROUBLE - RF Sensor Supervision - #	
382 Loss of supervision - RPM	TROUBLE - RPM Sensor Supervision - #	
383 Sensor tamper	TROUBLE - Sensor Tamper - #	
384 RF transmitter low battery	TROUBLE - RF Sensor Batt. - #	
Open/Close - 400		
400 Open/Close	OPENING	CLOSING
401 Open/Close by user	OPENING - User #	CLOSING - User #
402 Group Open/Close	OPENING - Group User #	CLOSING - Group User #
403 Automatic Open/Close	OPENING - Automatic	CLOSING - Automatic
404 Late Open/Close	OPENING - Late	CLOSING - Late
405 Deferred Open/Close	Opening not used	Closing not used
406 Cancel	OPENING - Cancel	CLOSING - Cancel
407 Remote arm/disarm	OPENING - Remote	CLOSING - Remote
408 Quick arm	Opening not applicable	CLOSING - Quick Arm
409 Keyswitch Open/Close	OPENING - Keyswitch	CLOSING - Keyswitch
Remote Access - 410		
411 Callback request made	REMOTE - Callback Requested (restore not applicable)	
412 Success - download/access	REMOTE - Successful Access (restore not applicable)	
413 Unsuccessful access	REMOTE - Unsuccessful Access (restore not applicable)	
414 System shutdown	REMOTE - System Shutdown	
415 Dialer shutdown	REMOTE - Dialer Shutdown	
416 Success - upload/access	REMOTE - Successful Access (restore not applicable)	
Access Control - 420		
421 Access denied	ACCESS - Access Denied - User # (restore not used)	
422 Access report by user	ACCESS - Access Granted - User # (restore not used)	
System Disables - 500 and 510		

EVENT	MESSAGE
Sounder/Relay Disables - 520	
520 Sounder/Relay disable	DISABLE - Sounder/Relay - #
521 Bell 1 disable	DISABLE - Bell/Siren - #1
522 Bell 2 disable	DISABLE - Bell/Siren - #2
523 Alarm relay disable	DISABLE - Alarm Relay
524 Trouble relay disable	DISABLE - Trouble Relay
525 Reversing relay disable	DISABLE - Reversing Relay
526 Bell 3 disable	DISABLE - Bell/Siren - #3
527 Bell 4 disable	DISABLE - Bell/Siren - #4
System Peripheral Disables - 530 and 540	
Communication Disables - 550 and 560	
551 Dialer disabled	DISABLE - Dialer Disable
552 Radio transmitter disabled	DISABLE - Radio Disable
Bypasses - 570	
570 Zone bypass	BYPASS - Zone Bypass - #
571 Fire bypass	BYPASS - Fire Bypass - #
572 24-Hour zone bypass	BYPASS - 24-Hour Bypass - #
573 Burglar bypass	BYPASS - Burg. Bypass - #
574 Group bypass	BYPASS - Group Bypass - #
Test Misc. - 600	
601 Manual trigger test	TEST - Manually Triggered (restore not applicable)
602 Periodic test report	TEST - Periodic (restore not applicable)
603 Periodic RF transmission	TEST - Periodic Radio (restore not applicable)
604 Fire test	TEST - Fire Test (restore not used)
605 Status report to follow	STATUS - Status Follows (restore not applicable)
606 Listen-in to follow	LISTEN - Listen-in Active (restore not applicable)
607 Walk test mode	TEST - Walk Test Mode
608 System abnormal test	TEST - System Abnormal Test

Appendix G: Central Station Points

The IPOTS-COM transmits Central Station Reports in a numerical format which indicates the FACP addressable device address that is reporting and the SLC loop on which it resides. The following table indicates the Central Station Report (CS Report) number that will be transmitted and the addressable device address and SLC loop number it represents.

CS Report	Detector Address Loop 1	CS Report	Detector Address Loop 1	CS Report	Detector Address Loop1	CS Report	Detector Address Loop 1	CS Report	Detector Address Loop 1
001	001	033	033	065	065	097	097	129	129
002	002	034	034	066	066	098	098	130	130
003	003	035	035	067	067	099	099	131	131
004	004	036	036	068	068	100	100	132	132
005	005	037	037	069	069	101	101	133	133
006	006	038	038	070	070	102	102	134	134
007	007	039	039	071	071	103	103	135	135
008	008	040	040	072	072	104	104	136	136
009	009	041	041	073	073	105	105	137	137
010	010	042	042	074	074	106	106	138	138
011	011	043	043	075	075	107	107	139	139
012	012	044	044	076	076	108	108	140	140
013	013	045	045	077	077	109	109	141	141
014	014	046	046	078	078	110	110	142	142
015	015	047	047	079	079	111	111	143	143
016	016	048	048	080	080	112	112	144	144
017	017	049	049	081	081	113	113	145	145
018	018	050	050	082	082	114	114	146	146
019	019	051	051	083	083	115	115	147	147
020	020	052	052	084	084	116	116	148	148
021	021	053	053	085	085	117	117	149	149
022	022	054	054	086	086	118	118	150	150
023	023	055	055	087	087	119	119	151	151
024	024	056	056	088	088	120	120	152	152
025	025	057	057	089	089	121	121	153	153
026	026	058	058	090	090	122	122	154	154
027	027	059	059	091	091	123	123	155	155
028	028	060	060	092	092	124	124	156	156
029	029	061	061	093	093	125	125	157	157
030	030	062	062	094	094	126	126	158	158
031	031	063	063	095	095	127	127	159	159
032	032	064	064	096	096	128	128		

Table G.1 Addressable DETECTORS on SLC Loop 1

CS Report	Module Address Loop 1	CS Report	Module Address Loop 1	CS Report	Module Address Loop1	CS Report	Module Address Loop 1	CS Report	Module Address Loop 1
160	001	192	033	224	065	256	097	288	129
161	002	193	034	225	066	257	098	289	130
162	003	194	035	226	067	258	099	290	131
163	004	195	036	227	068	259	100	291	132
164	005	196	037	228	069	260	101	292	133
165	006	197	038	229	070	261	102	293	134
166	007	198	039	230	071	262	103	294	135
167	008	199	040	231	072	263	104	295	136
168	009	200	041	232	073	264	105	296	137
169	010	201	042	233	074	265	106	297	138
170	011	202	043	234	075	266	107	298	139
171	012	203	044	235	076	267	108	299	140
172	013	204	045	236	077	268	109	300	141
173	014	205	046	237	078	269	110	301	142
174	015	206	047	238	079	270	111	302	143
175	016	207	048	239	080	271	112	303	144
176	017	208	049	240	081	272	113	304	145
177	018	209	050	241	082	273	114	305	146
178	019	210	051	242	083	274	115	306	147
179	020	211	052	243	084	275	116	307	148
180	021	212	053	244	085	276	117	308	149
181	022	213	054	245	086	277	118	309	150
182	023	214	055	246	087	278	119	310	151
183	024	215	056	247	088	279	120	311	152
184	025	216	057	248	089	280	121	312	153
185	026	217	058	249	090	281	122	313	154
186	027	218	059	250	091	282	123	314	155
187	028	219	060	251	092	283	124	315	156
188	029	220	061	252	093	284	125	316	157
189	030	221	062	253	094	285	126	317	158
190	031	222	063	254	095	286	127	318	159
191	032	223	064	255	096	287	128		

Table G.2 Addressable MODULES on SLC Loop 1

CS Report	Detector Address Loop 2	CS Report	Detector Address Loop 2	CS Report	Detector Address Loop2	CS Report	Detector Address Loop 2	CS Report	Detector Address Loop 2
319	001	351	033	383	065	415	097	447	129
320	002	352	034	384	066	416	098	448	130
321	003	353	035	385	067	417	099	449	131
322	004	354	036	386	068	418	100	450	132
323	005	355	037	387	069	419	101	451	133
324	006	356	038	388	070	420	102	452	134
325	007	357	039	389	071	421	103	453	135
326	008	358	040	390	072	422	104	454	136
327	009	359	041	391	073	423	105	455	137
328	010	360	042	392	074	424	106	456	138
329	011	361	043	393	075	425	107	457	139
330	012	362	044	394	076	426	108	458	140
331	013	363	045	395	077	427	109	459	141
332	014	364	046	396	078	428	110	460	142
333	015	365	047	397	079	429	111	461	143
334	016	366	048	398	080	430	112	462	144
335	017	367	049	399	081	431	113	463	145
336	018	368	050	400	082	432	114	464	146
337	019	369	051	401	083	433	115	465	147
338	020	370	052	402	084	434	116	466	148
339	021	371	053	403	085	435	117	467	149
340	022	372	054	404	086	436	118	468	150
341	023	373	055	405	087	437	119	469	151
342	024	374	056	406	088	438	120	470	152
343	025	375	057	407	089	439	121	471	153
344	026	376	058	408	090	440	122	472	154
345	027	377	059	409	091	441	123	473	155
346	028	378	060	410	092	442	124	474	156
347	029	379	061	411	093	443	125	475	157
348	030	380	062	412	094	444	126	476	158
349	031	381	063	413	095	445	127	477	159
350	032	382	064	414	096	446	128		

Table G.3 Addressable DETECTORS on SLC Loop 2

CS Report	Modules Address Loop 2	CS Report	Modules Address Loop 2	CS Report	Modules Address Loop2	CS Report	Modules Address Loop 2	CS Report	Modules Address Loop 2
478	001	510	033	542	065	574	097	606	129
479	002	511	034	543	066	575	098	607	130
480	003	512	035	544	067	576	099	608	131
481	004	513	036	545	068	577	100	609	132
482	005	514	037	546	069	578	101	610	133
483	006	515	038	547	070	579	102	611	134
484	007	516	039	548	071	580	103	612	135
485	008	517	040	549	072	581	104	613	136
486	009	518	041	550	073	582	105	614	137
487	010	519	042	551	074	583	106	615	138
488	011	520	043	552	075	584	107	616	139
489	012	521	044	553	076	585	108	617	140
490	013	522	045	554	077	586	109	618	141
491	014	523	046	555	078	587	110	619	142
492	015	524	047	556	079	588	111	620	143
493	016	525	048	557	080	589	112	621	144
494	017	526	049	558	081	590	113	622	145
495	018	527	050	559	082	591	114	623	146
496	019	528	051	560	083	592	115	624	147
497	020	529	052	561	084	593	116	625	148
498	021	530	053	562	085	594	117	626	149
499	022	531	054	563	086	595	118	627	150
500	023	532	055	564	087	596	119	628	151
501	024	533	056	565	088	597	120	629	152
502	025	534	057	566	089	598	121	630	153
503	026	535	058	567	090	599	122	631	154
504	027	536	059	568	091	600	123	632	155
505	028	537	060	569	092	601	124	633	156
506	029	538	061	570	093	602	125	634	157
507	030	539	062	571	094	603	126	635	158
508	031	540	063	572	095	604	127	636	159
509	032	541	064	573	096	605	128		

Table G.4 Addressable MODULES on SLC Loop 2

CS Report	Detectors Address Loop 2	CS Report	Detectors Address Loop 2	CS Report	Detectors Address Loop2	CS Report	Detectors Address Loop 2	CS Report	Detectors Address Loop 2
637	001	669	033	702	065	733	097	765	129
638	002	670	034	702	066	734	098	766	130
639	003	671	035	703	067	735	099	767	131
640	004	672	036	704	068	736	100	768	132
641	005	673	037	705	069	737	101	769	133
642	006	674	038	706	070	738	102	770	134
643	007	675	039	707	071	739	103	771	135
644	008	676	040	708	072	740	104	772	136
645	009	677	041	709	073	741	105	773	137
646	010	678	042	710	074	742	106	774	138
647	011	679	043	711	075	743	107	775	139
648	012	680	044	712	076	744	108	776	140
649	013	681	045	713	077	745	109	777	141
650	014	682	046	714	078	746	110	778	142
651	015	683	047	715	079	747	111	779	143
652	016	684	048	716	080	748	112	780	144
653	017	685	049	717	081	749	113	781	145
654	018	686	050	718	082	750	114	782	146
655	019	687	051	719	083	751	115	783	147
656	020	688	052	720	084	752	116	784	148
657	021	689	053	721	085	753	117	785	149
658	022	690	054	722	086	754	118	786	150
659	023	691	055	723	087	755	119	787	151
660	024	692	056	724	088	756	120	788	152
661	025	693	057	725	089	757	121	789	153
662	026	694	058	726	090	758	122	790	154
663	027	695	059	727	091	759	123	791	155
664	028	696	060	728	092	760	124	792	156
665	029	697	061	729	093	761	125	793	157
666	030	698	062	730	094	762	126	794	158
667	031	699	063	731	095	763	127	795	159
668	032	700	064	732	096	764	128		

Table G.5 Addressable DETECTORS on SLC Loop 3

CS Report	Modules Address Loop 2	CS Report	Modules Address Loop 2	CS Report	Modules Address Loop2	CS Report	Modules Address Loop 2	CS Report	Modules Address Loop 2
796	001	828	033	860	065	892	097	924	129
797	002	829	034	861	066	893	098	925	130
798	003	830	035	862	067	894	099	926	131
799	004	831	036	863	068	895	100	927	132
800	005	832	037	864	069	896	101	928	133
801	006	833	038	865	070	897	102	929	134
802	007	834	039	866	071	898	103	930	135
803	008	835	040	867	072	899	104	931	136
804	009	836	041	868	073	900	105	932	137
805	010	837	042	869	074	901	106	933	138
806	011	838	043	870	075	902	107	934	139
807	012	839	044	871	076	903	108	935	140
808	013	840	045	872	077	904	109	936	141
809	014	841	046	873	078	905	110	937	142
810	015	842	047	874	079	906	111	938	143
811	016	843	048	875	080	907	112	939	144
812	017	844	049	876	081	908	113	940	145
813	018	845	050	877	082	909	114	941	146
814	019	846	051	878	083	910	115	942	147
815	020	847	052	879	084	911	116	943	148
816	021	848	053	880	085	912	117	944	149
817	022	849	054	881	086	913	118	945	150
818	023	850	055	882	087	914	119	946	151
819	024	851	056	883	088	915	120	947	152
820	025	852	057	884	089	916	121	948	153
821	026	853	058	885	090	917	122	949	154
822	027	854	059	886	091	918	123	950	155
823	028	855	060	887	092	919	124	951	156
824	029	856	061	888	093	920	125	952	157
825	030	857	062	889	094	921	126	953	158
826	031	858	063	890	095	922	127	954	159
827	032	859	064	891	096	923	128		

Table G.6 Addressable MODULES on SLC Loop 3

Appendix H: NFPA Requirements

The following is the minimum configuration to meet the NFPA requirements.

Module	Description	Local	Aux	Remote Station	Proprietary	Central Station	Non-Emergency Signaling
ES-1000X	Control Unit	Y	Y	Y	Y	Y	Y
IPOTS-COM[1]	Telco/IP Reporting	O[2]	N	N	Y[3]	Y[3]	O
4XTMF	RP/municipal box transmitter	O	Y	O	N	N	N
BB-55F	Battery box	O	O	O	O	O	O
ANN-LED	Annunciator module	O	O	O	O	O	O
ANN-80	Remote annunciator	O	O	O	O	O	O
ANN-100	Remote annunciator	O	O	O	O	O	O
ANN-S/PG	Serial/parallel interface module	O	O	O	O	O	O
ANN-I/O	LED driver module	O	O	O	O	O	O
ANN-RLED	Annunciator module	O	O	O	O	O	O
ANN-RLY	Relay module	O	O	O	O	O	O
Where Y = Yes, N = No, and O = Optional							

1 Pre-installed on ES-1000X/C models
2 Required when carbon monoxide signaling is employed
3 The IPOTS-COM must be employed for off-premises signaling

Appendix I: Open/Short/Ground Trip Values

Table I.1 lists the earth fault resistance detection for each applicable terminal on the FACP.

Output Circuit	Terminal	Trip Resistance (in ohms)
Remote Sync	+	203K
Remote Sync	-	176K
NAC 1-4	+	203K
NAC 1-4	-	176K
ANN Bus	A	138K
ANN Bus	B	143K
Aux Power	+	174K
Aux Power	-	175K
SLC	+	52K
SLC	-	117K

Table I.1 Earth Fault Trip Values

Table I.2 lists the open/short trip values and restoral values for the NAC circuits on the FACP.

Circuit	Trip Resistance (in ohms)	Restore Value
NAC 1-4	Shorts below 1.4K	2.2K
NAC 1-4	Opens above 35K	21K
Remote Sync	Shorts below 1.5K	2.3K
Remote Sync	Opens above 45K	26K

Table I.2 NAC Open/Short Trip Values

Appendix J: Canadian Applications

- The ES-1000XC is supplied standard with a dress panel for Canadian applications.
- When installing and programming the FACP, the Canadian Option must be set to **ON** prior to any other panel programming (refer to "Canadian Option" on page 76 of the Programming Section of this manual).
- At least one ANN-LED must be installed adjacent to the FACP as it is part of the primary operator interface. Wiring to the ANN-LED must be in metal conduit and must be connected to the FACP's Primary ANN-BUS.
- If remote indicators are desired, they must be connected to the Secondary ANN-BUS circuit.
- The installer must write in the *Date of Final Assembly* on the Master Marking and Warranty Label located on the FACP backbox door.
- Positive Alarm Sequence (PAS) and the Pre-Signal option are not available for Canadian applications.
- The F1 function key is automatically configured to perform a manual alarm signal activation when pressed.
- The F2 function key is automatically configured to perform an automatic alarm signal cancel in two-stage NAC operation. This prevents the NAC from advancing to the second-stage alarm.
- The F3 function key is automatically configured to force active two-stage NACs into the second (alarm) stage. It advances NAC coding directly to the second stage alarm.
- If NACs are set up for two-stage operation, the Silence Inhibit timer is automatically enabled and is fixed at 5 minutes.
- AlarmNet supervision settings for panels communicating in Ethernet-only method are fixed at 3 minutes and cannot be changed regardless of programming selection.

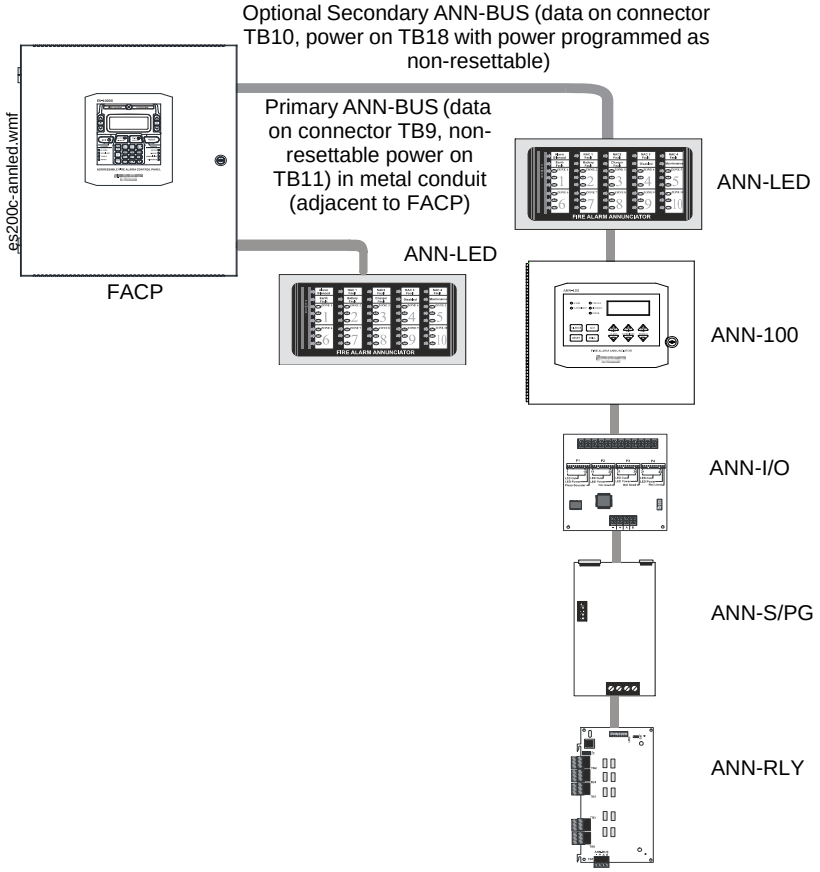

Figure J.1 FACP Minimum Configuration - Single ANN-LED

Notes:
1. The CRF-300 and the MMF-300 must be mapped to the same zone which is programmed for supervisory operation.
2. No other device can be mapped to that supervisory zone.
3. Wire gauge must be 18AWG minimum.

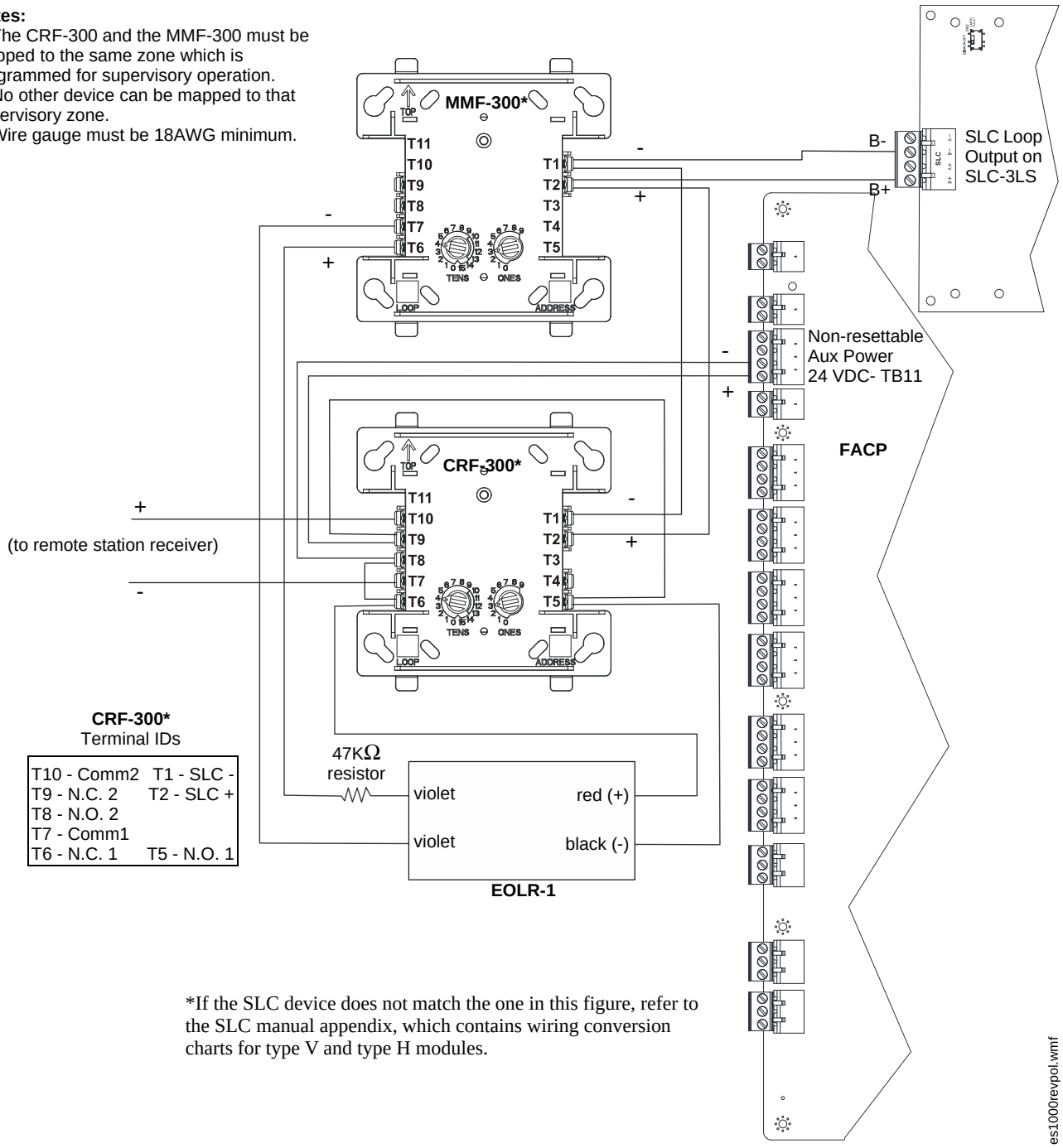

CRF-300*
Terminal IDs

T10 - Comm2	T1 - SLC -
T9 - N.C. 2	T2 - SLC +
T8 - N.O. 2	
T7 - Comm1	
T6 - N.C. 1	T5 - N.O. 1

*If the SLC device does not match the one in this figure, refer to the SLC manual appendix, which contains wiring conversion charts for type V and type H modules.

Figure J.2 Alternate Transmission for Supervisory Signals

Index

Numerics

24 Hour Test Time **82**
24VDC power **68**
4XTMF module **137, 138**
    coil resistance **29**
    current **29**
    installation **29**
    installation steps **30**
    see also Transmitter Module **17**
    see also transmitter module **13**
    supervision **68, 77**
    voltage **29**

A

AC Branch Circuit
    calculations **125**
AC Loss Delay **71**
AC Power **24**
    current **13**
    current, maximum **24**
    voltage **13**
    wiring **13, 24**
account code **81**
Acknowledge **15, 102**
add Detector **50**
add Module **56**
addressable detectors
    see also detectors **13**
addressable device accessories **16**
addressable modules **16**
    see also modules **13**
addressing
    see also device addressing **67**
    see also module or detector addressing **16**
Ademco Contact ID format **145**
adjective
    control module **64**
    list **55**
    monitor module **60**
adjective/noun **55, 56**
    control module **63**
    monitor module **60**
administrator **45, 46**
alarm **104, 105**
alarm silence **15, 102**
alarm verification **12, 53, 107, 109**
AlarmNet **80**
ANN-100 Annunciator Module **13, 18, 35**
ANN-80 Annunciator Module **13, 18, 32**
ANN-BUS
    annunciators **18**
    guidelines **18**
    power **32**
    primary **14, 87, 158**
    secondary **14, 87, 158**
ANN-I/O LED Driver **13, 18, 37**
ANN-LED Annunciator Module **13, 18, 39**
ANN-RLED Annunciator Module **13, 18**
ANN-RLY Relay Module **13, 18, 40**
ANN-S/PG Printer Module **13, 18, 35**
ANN-SB80KIT Mounting Kit **33**
annunciator guidelines **18**
annunciator module **13, 18, 39**
annunciators **18, 86**
asterisk **44**
automatic test operation **107**
autoprogramming **12, 44, 49**
autosilence **12, 109**
    NAC **74**
Auxiliary Power **13**
auxiliary power **13, 25, 68, 77**

B

backbox **16**
    see also cabinet **23**
banner **68**
    setting **69**
battery
    cable connection **24**
    charger capacity **13**
    see also secondary power **13, 24**
battery box **17**
    BB-26 **16**
battery charger **17**
    disable **13, 68**
    enable **101**
    external **17**
battery size **68**
BB-26 **16**
BB-55F
    see also battery box **16, 17**

C

cabinet
    dimensions **22, 23**
cabinet mounting **21**
calculate system current draw **125**
Calculating the Battery Size **127**
Canadian applications **20, 158**
Canadian option **68, 76, 158**
central station **79, 80, 81, 120**
    account code **81**
    communications **117**
    point assignments **150**
central station reports **150**
change password **45, 46**
charger disable **78**
CHG-120F
    see also battery charger **17**
CHG-75
    see also battery charger **17**
class **12**
Class A **25**
    NAC wiring **26**
    wiring **26**
Class B **25**
    NAC wiring **26**
Classic Loop Interface Protocol **67**
CLIP mode
    see also Classic Loop Interface Protocol **67**
clock format **70**
coded operation **108**
coding
    NAC **74**
    two stage operation **74**
communication format **82**
communicator **16, 28**
    replacement **80**
communicator settings **79**
control buttons **102**
control module **16**
    auto silence **72**
    description display **64**
    display **61**
    edit **61**
    enabled/disabled **62**
    noun **64**
    noun/adjective **63, 64**
    silenceable **63**
    type **62**
    type codes **63**
control module delay timer **109**
correlations **128**
current
    AC Power **24**
    availability **14**
    maximum **14**
current draw calculations **126**

D

data
    see also detector data and sensitivity **107**
data values
    see also detector data and sensitivity **12**
date setting **70**
Daylight Saving Time **70**
DC power
    see also auxiliary DC power **25**
default programming **136**
delete detector **51**
delete module **57**
description
    control module **64**
    detector label **56**
    monitor module **61**
detector
    add **50**
    adding description **55**
    delete **51**
    edit **51**
    enable/disable **52**
    programming **50**
    screen display **51**
    type **52**
    verification **53**
    wireless **54**
detector data **107, 115**
    acceptable range **115**
    printout **115**
device addressing **67**

device IP address **80**
dimensions
    cabinet **22**
DIRTY1 **115**
DIRTY2 **115**
disable
    battery charger **68**
    charger **68, 78**
disable point
    maintenance level **98**
download **120, 121**
dress panel **16**
drift compensation **12, 115**
    definition **115**
drill **15, 102**

E

earth ground **24**
edit
    control module **61**
    detector **51**
    detector screens **51**
    module, monitor **57**
enable
    remote sync **68**
enable/disable
    detector **52**
    module, monitor **58**
enabled/disabled
    control module **62**
end-of-line resistor assembly **16**
English text **68, 77**
Enter key **48, 97**
EOL-C(R/W) Mounting Plate **17**
erase history **78**
error checking **120**
event code classification **145**
event codes **83**
exiting
    programming **44**
    read status **44**

F

FACP
    see also Fire Alarm Control Panel **12**
features **12**
fire alarm control panel
    see also FACP **12**
firmware upgrade **123**
form-C relay **25**
French text **68, 77**
FS-Tools **16, 17, 56, 119**
function keys **68**

G

gains **80**
gateway IP address **80**
general alarm zone **60**
    see also zone Z00 **54, 55**
ground fault **42**
guidelines
    ANN-BUS annunciators **18**

H

hazard condition **106**
history **78**
    erase **78**
    maintenance level **98**
    view events **78**
history file **12**
HVAC control **143**
HVAC OVRRIDE **144**
HVAC RESTART **144**
HVAC SHUTDN **143**

I

indicators **15**
installation **21**
in-suite silence **72**
intelligent **12**
invalid password **47, 96**
inventory **12**
INVREP **115**
IP settings **80**
IPOTS-COM **16, 28**

K

key control enable **95**
key panel **15**

L

lamp test **15**
language **68, 77**
LCD display **12, 15**
LED
    AC Power **102**
    Alarm Silenced **103**
    Battery **102**
    CO Alarm **102**
    Communication **103**
    Disabled **103**
    Fire Alarm **102**
    Ground **102**
    Maintenance **103**
    see also indicators **15**
    Supervisory **102**
    Trouble **102**
LED driver **13, 18, 37**
local energy municipal box service **29**
local programming **44**
loop expander **17, 29**
loop setup **67**

M

maintenance alert **12, 107**
    levels **115**
maintenance programming level **44, 47, 48, 97**
manual programming **44**
master programming level **44, 47, 48**
medical alert **106**
MNS override **77**
module
    add **56**
    addressing **16**
    delete **57**
    edit monitor **57**
    programming **56**
    see also addressable modules **16**
monitor module **16**
    adjective **60**
    enabled/disabled **58**
    noun **61**
    noun/adjective **60**
    type **58**
    type action **59**
    type list **58**
    type selection **59**
mounting
    cabinet **21**
    main circuit board **21**
municipal box transmitter
    see also 4XTMF module **29**

N

NAC **13, 73, 107**
    auto silence **74**
    Class A wiring diagram **26**
    Class B wiring diagram **26**
    coded **108**
    coding **74**
    current **13**
    enable **100**
    enable/disable **73**
    end-of-line resistor **13**
    options **68**
    power **12**
    see also notification appliance circuit **12**
    see also notification appliance crcuit **25**
    silence inhibit **75**
    silenceable **74**
    sync operation **107**
    type codes **73**
    voltage drop **13**
    voltage, operating **13**
    wiring Style **25**
NFPA 72 **137, 138, 139**
NFPA battery requirements **127**
NFPA standard **137**
non-power-limited
    relay connections **25**
non-resettable power
    current **13**
non-silenceable
    waterflow **65, 77**
normal operation **103**
not used **44**
notification appliance circuit **13, 73**
    see also NAC **12, 25**
noun
    list **56**
    monitor module **61**

O

operating instructions **102**
operation
  alarm **104**
  CO alarm **105**
  disable/enable **107**
  hazard condition **106**
  medical alert **106**
  NAC **107**
  normal **103**
  process monitor **106**
  programmed zone **107**
  supervisory **105**
  trouble **103**
  waterflow **107**
option modules **17, 29**
options **12**

P

panel software
  upgrade **123**
PAS **53, 66, 108**
  see also positive alarm sequence **12, 53**
PAS BYPASS **108**
PAS timer **71**
password **12, 44, 47, 96**
  invalid **47, 96**
password change **47**
  administrator **45, 46**
password fault **45**
phone line supervision **79**
phone number **81**
phone settings **79, 81**
phone type **79**
piezo
  see also sounder **15**
PIN **80**
point assignments **150**
point program **50**
positive alarm sequence **53, 108**
positive alarm sequence see also PAS **12**
POTS settings **79, 81**
power
  NAC **12**
  non-resettable **13**
  resettable **13**
power supply calculations **125**
power-limited
  relay connections **25**
power-up
  first time **44**
preferred DNS **80**
pre-signal **12, 53, 66**
  function **108**
  selection **60**
pre-signal delay timer **71**
primary ANN- BUS **14, 87, 158**
primary communication path **81**
primary phone number **81**
primary power
  see also AC Power **24**
printer
  configuration **42**
  connection **36, 42**
  setup **42**
printer module **13, 18, 35**
printer options **36**
process monitor **106**
PROCMON AR **76**
program
  check **96**
  check correlations **96**
  clear **96**
program check
  maintenance level **99**
program keys
  see also key panel **15**
programming
  annunciators **86**
  auto-programming **44**
  exiting **44**
  factory default **136**
  manual **44**
  master level **48**
  modules **56**
  off-line computer **44**
programming levels **44**
programming screens **44**
programming sheet **130, 131, 132, 133, 135**
programming utility **16, 17, 56**

R

read status **110**
  annunciators **113**
  exiting **44**
  history **113**
  NAC **112**
  print **114**
  program check **112**
  relay **112**
  system point **110**
  time/date **116**
  timers **112**
  trouble reminder **111**
  zones **111**
real-time clock **107**
receivers **118**
relay **13, 25, 76**
  connections **25**
  contact rating **13**
  fixed **25**
  form-C **13, 76**
  programmable **12, 25**
  programming **76**
  selections **76**
  trouble **12, 25**
relay module **13, 18, 40**
relay options **68**
remote annunciator **13, 18, 32, 35**
remote programming **44**
remote station service **29**
remote switch functions **12**
remote sync
  enable **100**
remote sync enable **68**
remote sync output **14, 26**
REN
  see also ringer equivalence number **19**
reset **15, 102**
resettable power **13**
ringer equivalence number **19**
role **47**
ROME Series **41**

S

secondary ANN- BUS **14, 87, 158**
secondary communication path **81**
secondary power requirements **127**
security features **120**
sensitivity **107, 115**
  see also smoke detector sensitivity **107**
signal rate **12**
silence inhibit **12, 75**
silence inhibit timer **108**
silenceable
  control module **63**
  NAC **74**
  waterflow **77**
silenceable alarm relay **76**
silenceable circuits
  synchronized signals **74**
silenceable waterflow **65**
SLC **12**
  see also signaling line circuit **12**
SLC loop protocol **67**
SLC wring class **67**
SLC3-LS Loop Expander Module **17, 29**
smoke detector
  chamber reading **115**
  data **107, 115**
  sensitivity **12, 107**
smoke detector power
  current **13**
software zones **12, 128**
sounder **15**
sounder base
  coding **55**
  volume **55**
special purpose zone **65**
specifications **13**
static settings **80**
strobe synchronization **12**
subnet mask **80**
subscreen **44**
supervision
  4XTMF **68, 77**
  phone lines **79**
supervisory **105**
SUPERVISORY AR **76**
sync
  programming **73**
  see also synchronization **75**
sync output **14**
  current **14**
  end-of-line resistor **14**

voltage **14**
synchronization **26, 107, 112**
by manufacturer **75**
programming **75**
see also strobe synchronization **12**
synchronized signals **107**
and silenceable circuits **74**
system
maintenance level **100**
system point **110**
system setup **67**

T

telephone circuitry **19**
telephone company
rights and warnings **19**
telephone line **28**
telephone line supervision **79**
telephone settings **79, 81**
test time interval **82**
time and date
maintenance level **100**
time setting **70**
time-date setting **68, 69**
time-out **120**
timer
in-suite silence **72**
timers **68**
transmittal priorities **117**
transmitter module **29**
see also 4XTMF module **13, 17**
trouble **103**
trouble display **103**
trouble relay **12**
trouble reminder **68, 109, 111**
trouble responses **104**
two-stage **66**
two-stage operation **74**
type
control module **62**
detector **52**
monitor module **58**
NAC **73**
type code
control module **63**
supervision **107**
verification **12**

U

UL power-limited wiring requirements **27**
see also power-limited and non-power-limited **25**
upload **121**
upload/download **119**
USB upload/download **121**
user role **47**

V

verification
detector **53**
view events **78**

W

walktest **12, 53, 63**
maintenance level **99**
operation **109**
selection **60**
waterflow
non-silenceable **65, 77**
silenceable **65, 77**
waterflow delay timer **71**
waterflow retard timer **109**
waterflow silenceable **68**
W-GATE **18**
wiring **42**
wire requirements **141**
wireless detector **54**
wireless gateway **18**
wiring **42**
wiring
AC power **24**
earth ground **24**
NAC Class A **26**
NAC Class B **26**
wiring Class **12**

Z

Z000 **54, 55, 60**
Z253
PAS zone **53**
Z254 **54**
zone assignment **54, 60, 75**
control module **63**
zone setup **65**
maintenance level **101**
zone type **65**
list **65**
zone Z250
in-suite silence zone **66**
zone Z251
CO active zone **66**
zone Z253 **53**
zone Z254
pre-signal zone **54**
zones **111, 128**
see also software zones **12**
zones disabled **66**
zones enabled **66**
zones installed **66**
zones per device **54**
zones per sounder base **55**

Notes

Slide-in Labels

Carefully cut along the outside of each label. Identify Function (F1-F4) keys as desired and slide the labels into the keypad. Starting at the center of the keypad next to the Function Keys, slide each label into the groove towards the outer edge. Function Keys F1 and F3 are not programmable in Canadian applications. Those keys must use the pre-printed labels below. .

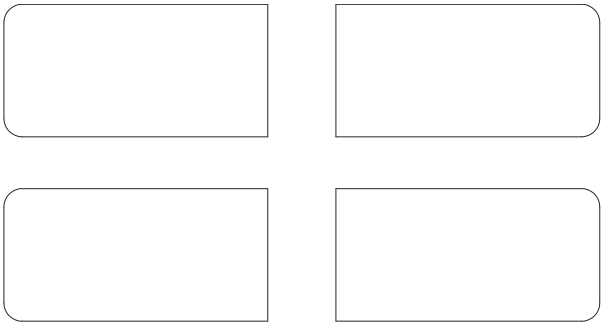

Figure L.1 Slide-in Labels

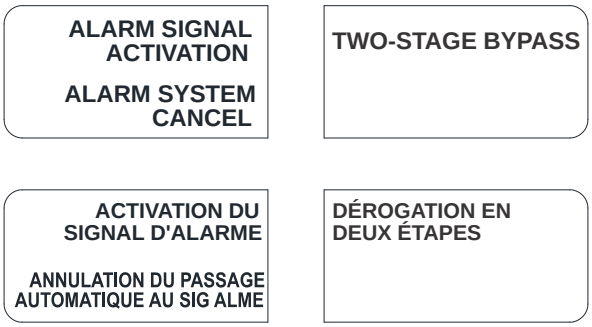

Figure L.2 Slide-in Labels for Canadian Applications

ES-1000X, ES-1000XC, and ES-1000XI Operating Instructions

NORMAL - Only *AC POWER* is illuminated green.
All other indicators are off. LCD display will read SYSTEM NORMAL.

PANEL KEY - The key to open the panel can be found at the following location:

_____

WHEN AUDIBLE DEVICES ARE SOUNDING -

FOR AN ALARM

1. Evacuate the protected area
2. Notify the monitoring service and/or the Fire Department immediately. Tell them briefly what happened and what your current status is.

   Phones: _____ _____
   Fire Department Monitoring Service

3. If the Fire Department is responding, be prepared to provide directions to arriving firefighters.

FOR TROUBLE, SUPERVISORY, AND EMERGENCY ALARMS

1. Notify the monitoring service and/or applicable first responders if this panel is connected to either one, and tell them what is happening.
2. Silence audible devices by unlocking and opening the panel and pressing the ACKNOWLEDGE/STEP button. The applicable indicator will remain illuminated. Contact authorized service personnel immediately! (See Below).

WARNING!

DO NOT ALLOW TROUBLE CONDITIONS TO REMAIN LOGGED IN THE SYSTEM. THE PROTECTION THE SYSTEM OFFERS HAS BEEN COMPROMISED OR ELIMINATED, WHEN A TROUBLE CONDITION EXISTS.

Cut along dotted line.

To return to normal after an alarm

1. Do not enter the protected area until safe to do so.
2. Clear all initiating devices. Smoke detectors will not reset if there is still smoke in the area.
3. Reset the control panel (PRESS the RESET button)

Power failure or brownout

If AC power drops too low or fails, *AC POWER* indicator will extinguish, the system *TROUBLE* indicator will turn on yellow, and the panel buzzer and any other audible trouble devices will sound. Contact authorized service personnel immediately. See below.

FIRE-LITE ALARMS
by Honeywell

In the event of trouble, contact the
local Fire-Lite Service Representative

Name: _____

Company: _____

Address: _____

Telephone Number: _____

Manual activation (Fire Drill or otherwise)

Notification Appliance Circuits (NACs) can be activated by pressing and holding the DRILL button for at least two seconds.

NOTE: You may want to disconnect the municipal box by sliding the DISCONNECT switch, located on the 4XTMF module, to its disconnect position (to the right). If a DACT is connected, notify the monitoring service before conducting any fire drills or tests.

Alarm Silencing

Notification Appliance Circuits may be silenced by pressing the ALARM SILENCE button. *ALARM SILENCED* will turn on yellow. Subsequent alarms will reactivate circuits. Press the RESET button to clear the "silenced" condition.

NOTE: Notification Appliance Circuits may be programmed as nonsilenceable. Also, Signal Silence Inhibit, if enabled, will prevent silencing of NACs for one minute after an alarm (see manual).

To test the indicators, LCD display and piezo

Press and release the RESET button and check all indicators/LEDs. Every indicator/LED should be on, LCD shows all pixels on, piezo sounder beeps.

For more information, refer to the ES-1000X Series Manual, Document #LS10133-000FL-E. It is kept in the following location:

_____

THIS SHEET SHALL BE FRAMED ADJACENT TO THE CONTROL PANEL

Document #LS10134-000FL-E Rev. A 6/19/2023 ECN 00022081

Cut along dotted line.

Manufacturer Warranties and Limitation of Liability

Manufacturer Warranties. Subject to the limitations set forth herein, Manufacturer warrants that the Products manufactured by it in its Northford, Connecticut facility and sold by it to its authorized Distributors shall be free, under normal use and service, from defects in material and workmanship for a period of thirty six months (36) months from the date of manufacture (effective Jan. 1, 2009). The Products manufactured and sold by Manufacturer are date stamped at the time of production. Manufacturer does not warrant Products that are not manufactured by it in its Northford, Connecticut facility but assigns to its Distributor, to the extent possible, any warranty offered by the manufacturer of such product. This warranty shall be void if a Product is altered, serviced or repaired by anyone other than Manufacturer or its authorized Distributors. This warranty shall also be void if there is a failure to maintain the Products and the systems in which they operate in proper working conditions.

MANUFACTURER MAKES NO FURTHER WARRANTIES, AND DISCLAIMS ANY AND ALL OTHER WARRANTIES, EITHER EXPRESSED OR IMPLIED, WITH RESPECT TO THE PRODUCTS, TRADEMARKS, PROGRAMS AND SERVICES RENDERED BY MANUFACTURER INCLUDING WITHOUT LIMITATION, INFRINGEMENT, TITLE, MERCHANTABILITY, OR FITNESS FOR ANY PARTICULAR PURPOSE. MANUFACTURER SHALL NOT BE LIABLE FOR ANY PERSONAL INJURY OR DEATH WHICH MAY ARISE IN THE COURSE OF, OR AS A RESULT OF, PERSONAL, COMMERCIAL OR INDUSTRIAL USES OF ITS PRODUCTS.

This document constitutes the only warranty made by Manufacturer with respect to its products and replaces all previous warranties and is the only warranty made by Manufacturer. No increase or alteration, written or verbal, of the obligation of this warranty is authorized. Manufacturer does not represent that its products will prevent any loss by fire or otherwise.

Warranty Claims. Manufacturer shall replace or repair, at Manufacturer's discretion, each part returned by its authorized Distributor and acknowledged by Manufacturer to be defective, provided that such part shall have been returned to Manufacturer with all charges prepaid and the authorized Distributor has completed Manufacturer's Return Material Authorization form. The replacement part shall come from Manufacturer's stock and may be new or refurbished. THE FOREGOING IS DISTRIBUTOR'S SOLE AND EXCLUSIVE REMEDY IN THE EVENT OF A WARRANTY CLAIM.

Warn-HL-08-2009.fm

One Fire-Lite Place, Northford, CT 06472-1601 USA
USA - Phone: (203) 484-7161
Canada - Phone: (905) 856-8733
www.firelite.com