G Series Control Panel

Installer Quick Start Guide

Use this guide to quickly install a Bosch B9512G/B8512G security system. Additional information is found in the Control Panels Installation Manual.

When you see this icon, use your smart phone with a QR code reader app to view helpful videos.

For additional training:

Bosch YouTube channel:

1. Scan QR code.
2. Scroll down.
3. Locate and select your region for additional videos.

G Series highlights:

(North America only)

Installation sequence:

Scan and follow these videos in sequential order to the steps listed below.

Control panel component layout

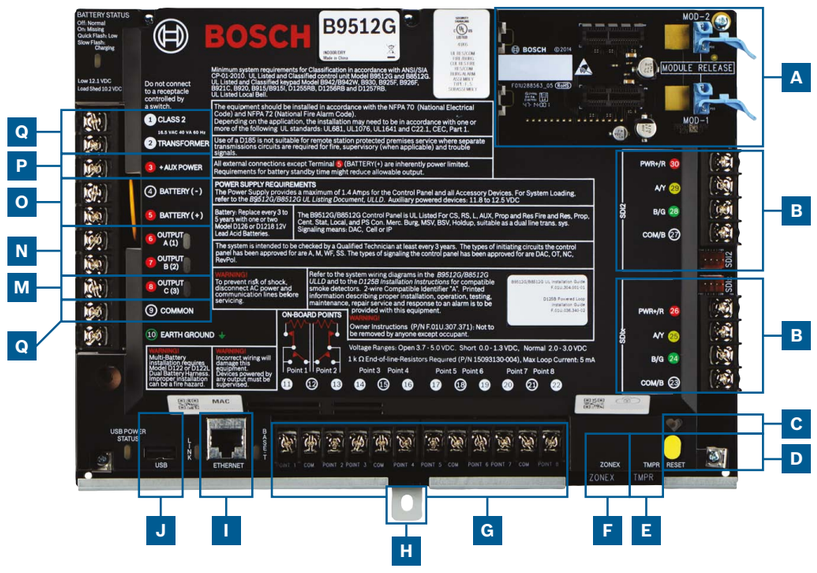

Control panel connection location

Location	Item	Description	Specification
A	MOD-1/MOD-2	Plug-in comm module	Communication module locations
B	R Y G B	Device bus	SDI2/SDIx (configurable) device bus
C	♥	Heartbeat LED	Slow=normal, rapid=service mode
D	Reset	Reset switch	Hold five seconds to enter or exit service mode
E	TMPR	Tamper	Optional tamper switch connector (ICP-EZTS)
F	ZONEX	Expansion bus	Uses B600 for use with ZONEX and POPEX devices
G	1 COM 2 to 7 COM 8	Alarm points	8 On-Board supervised inputs
H	Mounting	Mounting screw	Mounting screw location for control panel
I	ETHERNET	Ethernet port	Built-in on-board Ethernet connection (10Base-T/100Base-T)
J	USB	USB port	USB connector (for firmware updates and RPS connection)
K	⏚	Earth ground	Earth ground connection
L	COMMON	COMMON	Common terminal
M	C	Output C (3)	Relay Output (High switching Low)
N	A B	Output A (1) B (2)	Programmable relay outputs (low switching high)
O	+BAT-	Battery	Secondary power
P	+AUX Power	Aux power	12 VDC, 1.4 amps
Q	CLASS 2 Transformer	16.5 VAC, 40 VA	Primary power (Transformer Connection)

Step 1 Mounting the control panel — H

Bosch tips:

- Mount the enclosure prior to mounting the control panel.
- Mount control panel into enclosure with hardware provided.

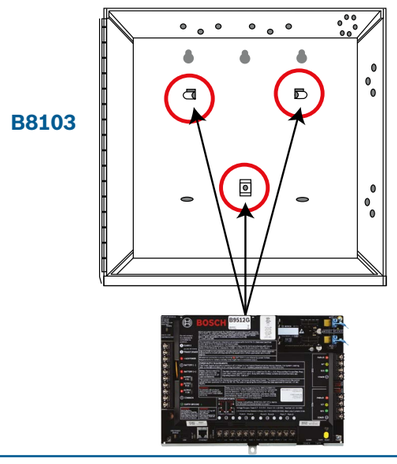

Step 2 Installing a communication module — A

Bosch tips:

- Insert leg of module into slot marked "x."
- **Cellular:** Place antenna on top of enclosure and run cable inside, then connect to module.
- **PSTN:** Connect module to a D166 (RJ31x) jack using a D161/D162 cable.

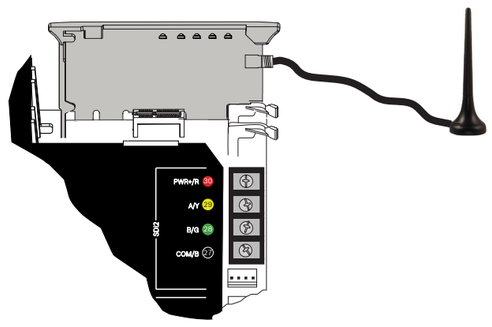

Step 3 Installing a keypad — B

Bosch tips:

- When installing a compatible Bosch keypad, refer to keypad installation guide for specific wiring diagrams. Basic keypad wiring is shown below.
- When installing more than one keypad, refer to keypad installation guide for unique address settings.

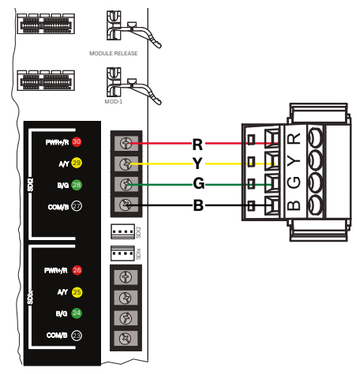

Step 4 Installing expansion modules — B

Bosch tips:

- If installing more than one device of the same type, refer to the module's installation guide for address settings.
- If installing a RADION B810 wireless receiver, use address 1 only.

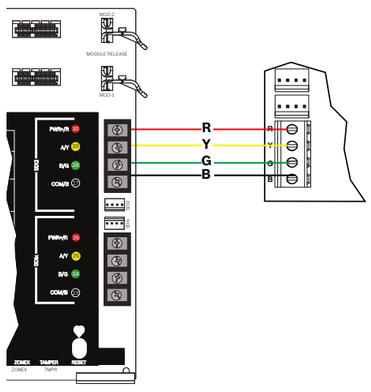

Step 5 Installing wired inputs — G

Bosch tips:

- If using a dual EOL, 2K EOL, or no EOL, refer to control panel installation guide for control panel settings.
- If using 2-wired powered devices, use a D125B.

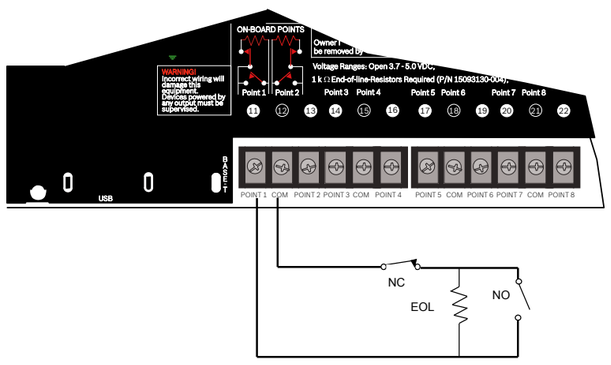

Step 6 Installing a bell or siren — L N

Bosch tips:

- Outputs can supply up to 1 A at 12 VDC.
- Output A and B are programmable outputs (Form A contacts switching high).
- Output C is a programmable output (Form A contact switching low).

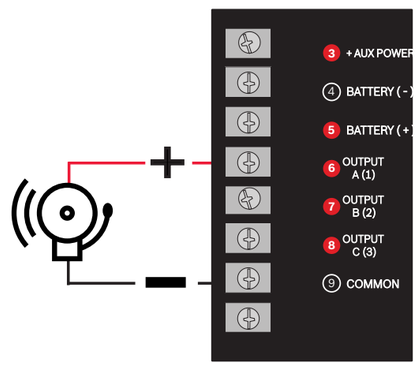

Step 7 Powering the control panel — Q O K

Bosch tips:

- Connect wires to control panel before applying battery or AC power.
- Connect earth ground to a cold water pipe (copper) or other solid connection to ground.

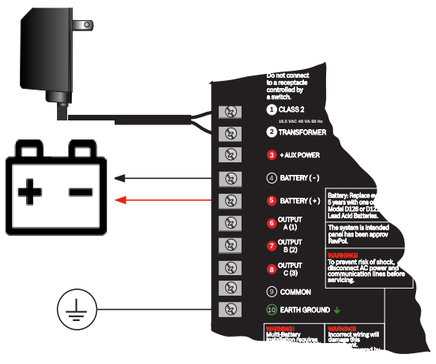

Step 8 Creating control panel accounts using RPS

Bosch tips:

- If configuring using the Installer Services Portal, go to **Step 11**.
- Install Remote Programming Software (RPS) v6.06 or later. You can download RPS from the RPS product page.
- Follow the RPS Account Assistant instructions to create new control panel accounts. The Account Assistant will help you create a new panel account.
- If RPS is not available, keypad programming is an option. Refer to keypad installation instructions.

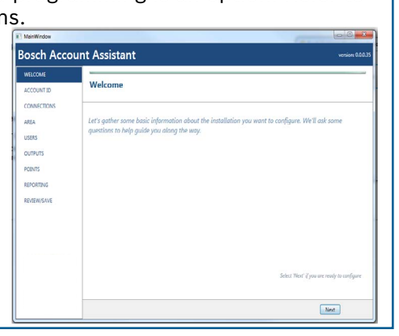

Step 9 Connecting to the control panel using RPS — I J

Bosch tips:

- Connect a computer with RPS installed. Direct RPS connections can be done through a USB connection or Ethernet connection.
- The Account Assistant automatically launches when you create a new account.
- For USB direct connection, use a B99 USB cable.

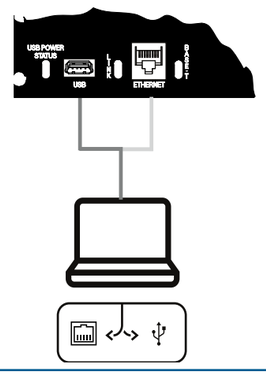

G Series Control Panel

Installer Quick Start Guide

BOSCH
Invented for life

Step 10 Configure and send to control panel using RPS

Bosch tips:

▶ Program your configuration information using Account Assistant.

1. Press **close Account Assistant, and connect to control panel.** This opens the **Panel Communication** window.
2. Press **Connect** and send configuration programming to control panel.

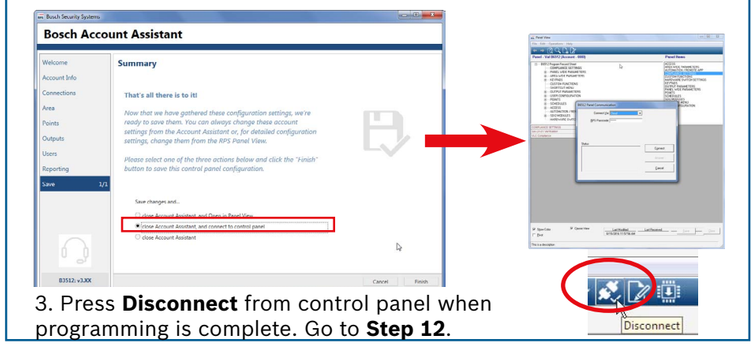

3. Press **Disconnect** from control panel when programming is complete. Go to **Step 12**.

Step 11a Accessing the Installer Service Portal and create panel account

Bosch tips:

Using the Installer Services Portal: (Not in all regions)

▶ Before you can use Installer Services Portal you must register for services at: https://sp.boschsecurity.com.

▶ Make sure the control panel is connected to the network.

1. Log into the Installer Services Portal.
2. Click on **New** and select **Device** to create a panel account.
3. Add panel account information.
4. Activate CloudID. ISP searches database for registered IDs.
5. Select **Activate**.
6. Click **Add Panel**.

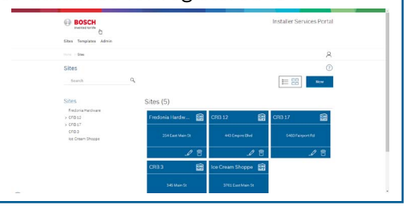

Step 11b Connect and send using the Installer Service Portal

Bosch tips:

Using the Installer Services Portal:

▶ Search or select device to connect to a control panel. Type in panel account name in the Search field to locate new account.

1. Select the panel account.
2. Click **Connect**.
3. Click **Configuration**. Program your configuration information.
4. Click the 3 vertical dots and select **Push Pending Changes to Panel** to send configuration.
5. Click **Disconnect** when configuration is complete.

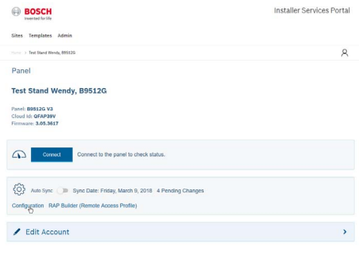

B Series control panel accessories (partial list)

Note: Not all products and features are available in all regions. Consult your Bosch representative or product datasheets for details.

Control panel

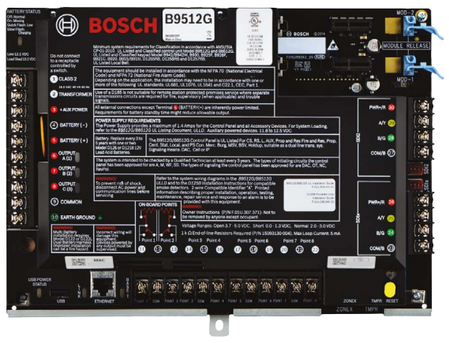

RADION wireless devices

-A versions of RADION devices are used in North and South America.
Non -A versions are used in Europe, Africa, and Australia.

B810 SDI2 Wireless Receiver
RFRP Wireless Repeater

RFPR-C12 Curtain PIR, Pet Immune 40 x 5 ft.

RFDL-11 PIR Microwave TriTech 35 x 25 ft.

RFPR-12 PIR, Pet Immune 40 ft.

RFGB Glass Break Detector

(Not in all regions)

RFDW-RM Recessed Door/ Window Contact

RFDW-SM Surface Mount Door/Window Contact

RFUN Universal Transmitter w/ Door/Window Contact

RFSM Wireless Smoke Detector

RFBT Billtrap Transmitter

RFPB-SB **RFPB-TB** 1 & 2 Button Panic

RFKF-TBS **RFKF-FBS** 2 & 4 Button Keyfobs

Inovonics wireless devices

B820 Wireless Interface

EN4200 Serial Receiver

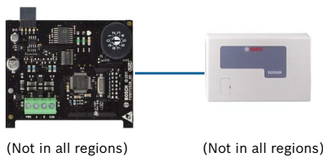

(Not in all regions) (Not in all regions)

Programing and software

D5500CU RPS Upgrade

B99 USB Cable

Remote Security Control Mobile App

***Installer Services Portal**

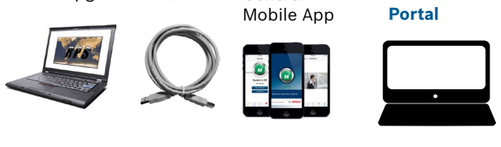

Power

B520 AUX Power Supply

TR1850 18 VAC Transformer

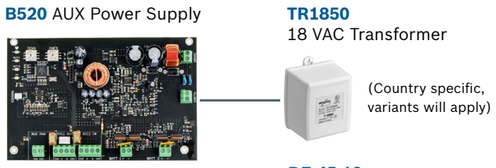

(Country specific, variants will apply)

D126 7Ah Battery

D1218 18Ah Battery

DE-45-18 18 VAC Transformer

(Country specific, variants will apply)

D135A Low-Battery Disconnect Module

Keypads

B942 Touch Screen

B942W Touch Screen

B940W Touch Screen

B930 Text w/ Soft Keys

B921C Capacitive Touch

B920 Text w/ Function Keys

(Not in all regions) (Not in all regions)

B915 Text

B915I Text

Access modules

B901 Access Module

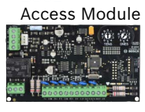

RFID tags (for Readers & B942 Keypads)

ACA-ATR13 **ACD-ATR11ISO** **ACD-ATR14CS**

Enclosures & accessories

B8103/D8103 Enclosure

D8109 Fire Enclosure

D8108A Attack Enclosure

BATB-40 Battery Box/Enclosure

BATB-80 Battery Box/ Enclosure with shelf

ICP-EZTS Universal Tamper

B56 Keypad Backbox

D101 Lock and Key set

D137 Mounting Bracket

D138 Mounting Bracket Right Angle

Communicators

B444-V Cellular (Verizon LTE)

B444-A Cellular (AT&T LTE)

B430 Telephone (PSTN)

B443 Cellular (HSPA+ SIM Required)

B444 Cellular (Verizon LTE, hot SIM Required)

B450 Remote Cellular Interface

(Not in all regions)

Residential fire

D132A Reversing Relay

D125B Dual Class B Initiating Module

D192G Bell Super Vision Module

(Not in all regions) (Not in all regions)

F220/F220-B6R Smoke Detector plus Base

I/O expansion modules

B208 Octo-Input Module

B308 Octo-Output Module

B600 ZONEX Module

B299 Expansion Module

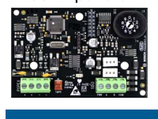

*Home automation

G450 Z-Wave Home Control Gateway

Remote Security Plus Mobile App

*Home automation may not be available in all regions. Consult your Bosch representative for details.

Wired motion detectors

Commercial Series

***ISC-CDL1-W15x** TriTech 50 ft.

***ISC-CDL1-WA15x** TriTech+ w/Anti-Mask 50 ft.

*(Not in all regions) *(Not in all regions)

Blue Line Gen2 Series

ISC-BDL2-WP12G/ WP6G/W12G TriTech 40 X 40 ft./20 x 20 ft./ 40 x 40 ft.

Classic Series

DS9370/ DS9371 360 TriTech 70 ft.

Step 12 Test the system

After system installation and control panel programming, perform a complete system test. A complete system test includes testing the control panel, all devices, and communication destinations for proper operation.

Bosch tips:

▶ Perform a Walk Test
1. Select **Actions**.
2. Select **Test**.
3. Select **Walk Test**.
4. Choose a test to run.

▶ Send a test report

(B942 is keypad shown)

FAQs

What is my default code?
User Code: **123456**
Installer Code: **123**

How do I enable Ground Fault Detection?
The B9512G/B8512G control panels come from the factory with Ground Fault Detection enabled. To verify, go to the control panels' RPS account and go to **Panel Wide Parameters - Miscellaneous - Ground fault Detection**. Verify it is enabled.

How do you remotely turn on and turn off the control panel?
This can be done through the use of the Remote Security Control App.

How do I connect directly to the control panel with Ethernet?
By default, the control panel is set up to auto detect and negotiate a connection to RPS when an ethernet cable is connected between them.

What do I need to be able to send personal notifications?
SMS (Text) messages require the use of a cellular module and emails can be sent by either an Ethernet or Cellular connection.

How do I enter "Service Mode"?
Press and hold the yellow reset button on the control panel for 5 seconds (repeat to exit).

Where can I go for additional information?

www.boschsecurity.com

Bosch Security Systems B.V.
Torenallee 49
5617 BA Eindhoven
Netherlands

© Bosch Security Systems B.V., 2019 Modifications reserved

F.01U.334.389 | 04 | 2019.09

1 | Overview

This enclosures can be used for residential fire and burglary installations and commercial burglary applications that do not require attack resistance.

2 | Installation

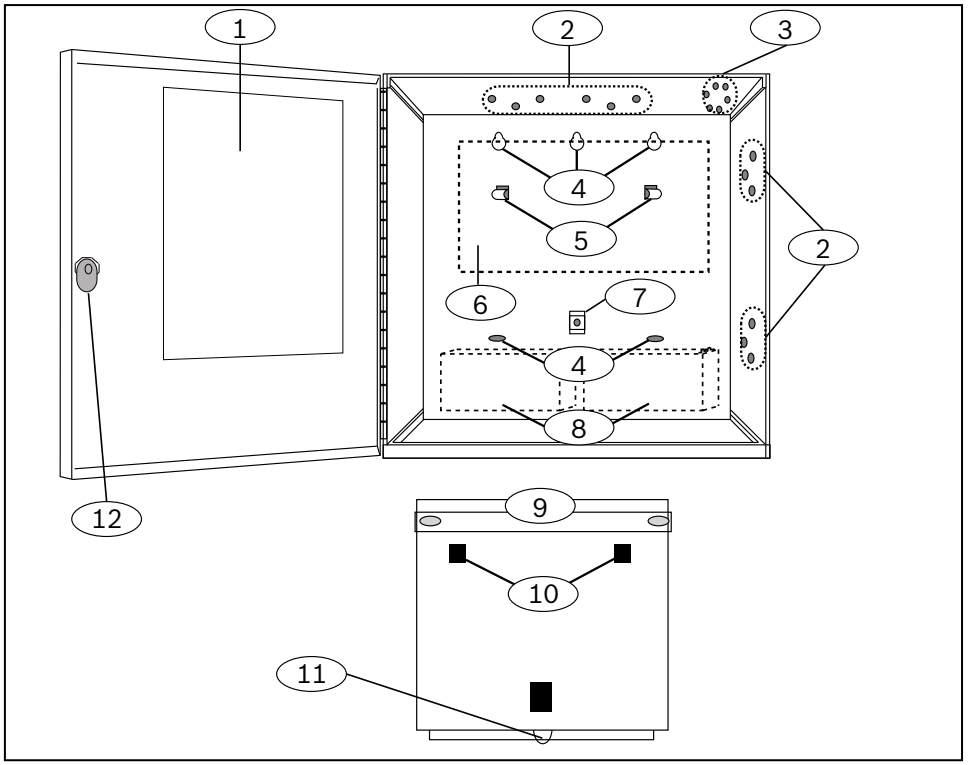

Callout – Description	Callout – Description
1 – Point chart label	7 – Skirt mounting hole
2 – Module mounting locations (4)	8 – Battery mounting locations (2)
3 – Tamper switch mounting location	9 – Back of the control panel
4 – Mounting hole locations (5)	10 – Mounting skirt hook openings (2)
5 – Mounting skirt hooks (2)	11 – Screw tab
6 – Control panel mounting location	12 – Lockset

3 | Wire an optional wire-in transformer

For systems using an optional wire-in transformer, wire the transformer as shown in this section.

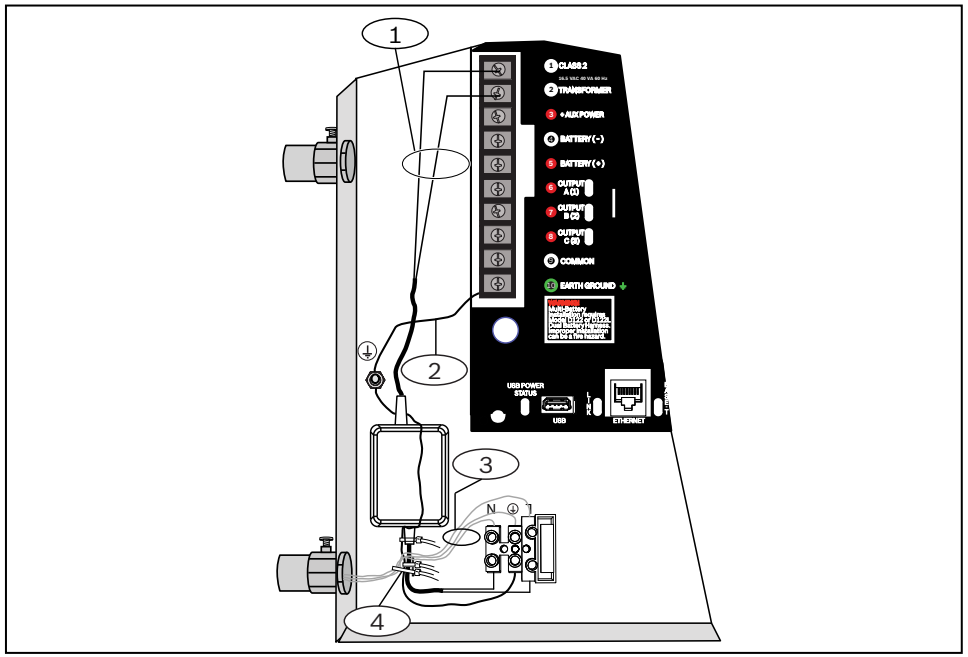

Callout – Description
1 – Low voltage AC
2 – Ground wire connection
3 – AC IN
4 – Wire tie the AC IN wires to the enclosure lance

4 | Specifications

Dimensions	16 in. x 16 in. x 3.5 in. (41 cm x 41 cm x 9 cm)
Color	B8103-White, D8103-Grey
Compatible tamper switches	D110 (P/N: 4998137947) or ICP-EZTS (P/N: F01U217038)
Compatible locksets (optional)	D101-448478D (Key #1358) D101F-43157D (Key #203)

Copyright
This document is the intellectual property of Bosch Security Systems, Inc. and is protected by copyright. All rights reserved.
Trademarks
All hardware and software product names used in this document are likely to be registered trademarks and must be treated accordingly.
Bosch Security Systems, Inc. product manufacturing dates
Use the serial number located on the product label and refer to the Bosch Security Systems, Inc. website at http://www.boschsecurity.com/datecodes/.

Bosch Security Systems, B.V.
Torenallee 49
5617 BA Eindhoven
Netherlands
www.boschsecurity.com

Enclosures

B8103/D8103

BOSCH

en Installation Manual

WPP

© 2019 Bosch Security Systems B.V.

F.01U.011.990 | 06 | 2019.05

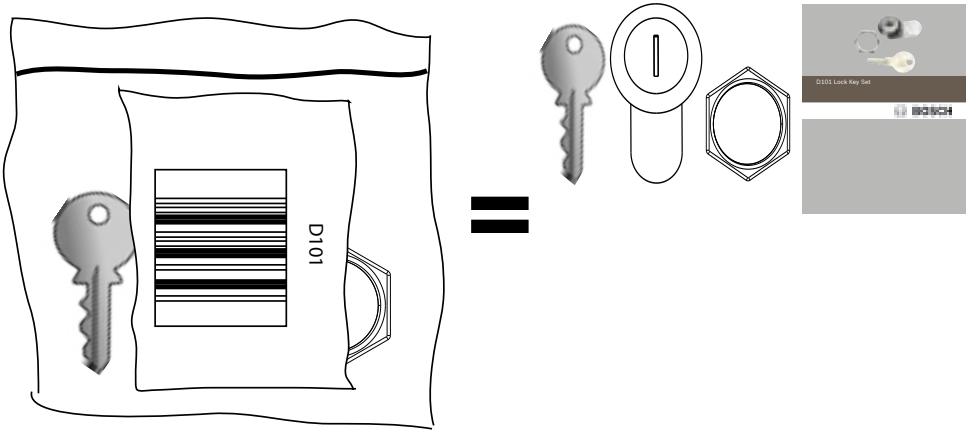

1 |

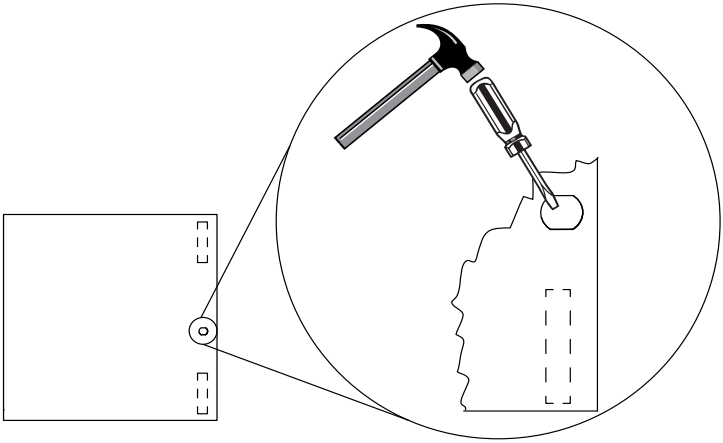

2 |

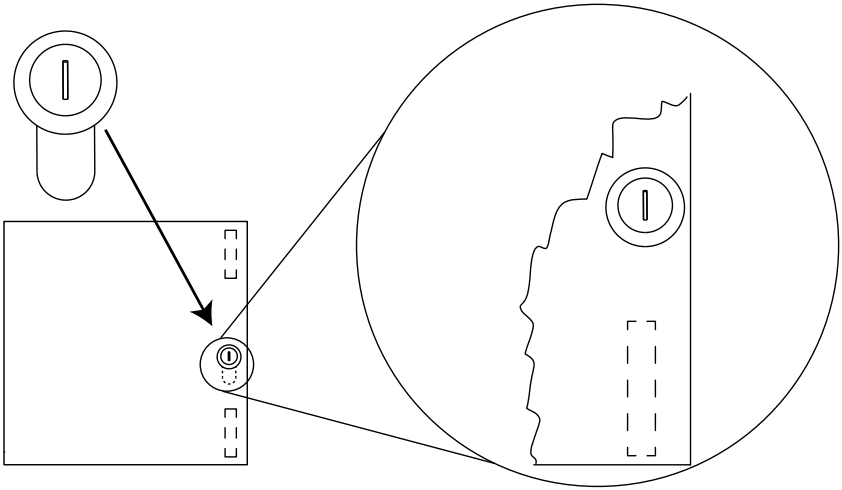

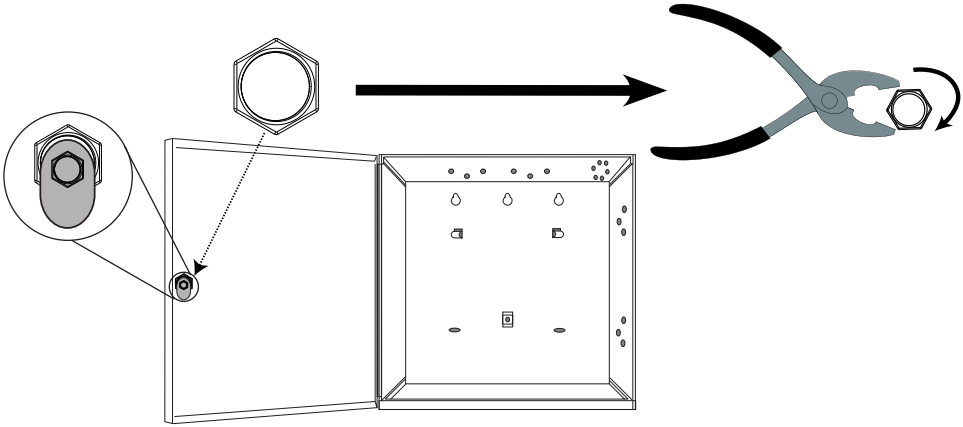

Weight	0.017 lb (0.008 kg)
Color	Chrome
Key number	D102 (#1358)

WPP

D101 Install

D101 Embedded install video

Bosch Security Systems, B.V.
Torenallee 49
5617 BA Eindhoven
Netherlands
www.boschsecurity.com
© Bosch Security Systems, B.V., 2022

D101 Lock Set
Installation Manual

BOSCH