D126 Standby Battery (12 V, 7 Ah)

www.boschsecurity.com

BOSCH
Invented for life

- 12 VDC sealed lead-acid
- Fully rechargeable
- Maintenance-free
- For use as secondary power source
- Long service life

This battery is a maintenance-free, sealed lead-acid, standby and auxiliary power source that provides long service life and dependability.
The battery is for use only with charging circuits calibrated for lead-acid batteries. It is suitable for supplying backup power for fire, security, and access control systems during AC power failures.
The D126 fits in any of the currently offered enclosures and connects to the two color-coded battery leads supplied with the control panel or module. Use a D122 Dual Battery Harness to connect two D126 batteries in parallel and double the amp hour capacity.

Certifications and approvals

Region	Certification	
USA	CSFM	California State Fire Marshal (see our website)

Installation/configuration notes

Standby power requirements
Refer to the appropriate control panel installation manual for information on calculating the standby battery requirements for the system. Total continuous and intermittent current requirements must not exceed the amp hour capacity of the battery.

Compatibility
The battery is compatible with all Bosch control panels.

Parts included

Quantity	Component
1	12 V battery

Technical specifications

Capacity

Capacity (25 °C)	12 V, 7.2 Ah	20 hour rate
Internal resistance	Fully charged battery (25 °C)	21 MΩ
Temperature dependency of capacity (20 hour rate)	40 °C (104 °F) 25 °C (77 °F) 0 °C (32 °F) -15 °C (5 °F)	102% 100% 85% 65%

Properties

Dimensions	15 cm x 6.5 cm x 9.4 cm (6 in. x 2.5 in. x 3.7 in.)
Total height with terminals	10 cm (4 in.)

Weight	2.5 kg (5.5 lb)
Terminal	Faston .187

Ordering information

D126 Standby Battery (12 V, 7 Ah)
A rechargeable sealed lead-acid power supply used as a secondary power supply or in auxiliary or ancillary functions.
Order number **D126**

Represented by:

Europe, Middle East, Africa:
Bosch Security Systems B.V.
P.O. Box 80002
5600 JB Eindhoven, The Netherlands
Phone: + 31 40 2577 284
emea.securitysystems@bosch.com
emea.boschsecurity.com

Germany:
Bosch Sicherheitssysteme GmbH
Robert-Bosch-Ring 5
85630 Grasbrunn
Germany
www.boschsecurity.com

North America:
Bosch Security Systems, Inc.
130 Perinton Parkway
Fairport, New York, 14450, USA
Phone: +1 800 289 0096
Fax: +1 585 223 9180
onlinehelp@us.bosch.com
www.boschsecurity.us

Asia-Pacific:
Robert Bosch (SEA) Pte Ltd, Security Systems
11 Bishan Street 21
Singapore 573943
Phone: +65 6571 2808
Fax: +65 6571 2699
apr.securitysystems@bosch.com
www.boschsecurity.asia

© Bosch Security Systems 2016 | Data subject to change without notice
2548450571 | en, V11, 28. Nov 2016

BOSCH
Invented for life

iCLASS 2K Wiegand Card (26-bit)

The card complies with 15693 ISO standards for smart card technology and operates at 13.56 MHz. It works with the R10, R40, and RK40 iCLASS Readers. The card is programmed to Wiegand 26-bit format. It has two 1 Kb application areas (256 Byte capacity). It has a glossy finish and inkjet matching numbers.

Ordering Information

iCLASS 2K Wiegand Card (26-bit) A 13.56 MHz contactless smart card programmed to Wiegand 26-bit format. It has two 1 Kb application areas (256 Byte capacity). Each package contains 50 cards.	**ACD-IC2K26-50**

Americas:
Bosch Security Systems, Inc.
130 Perinton Parkway
Fairport, New York, 14450, USA
Phone: +1 800 289 0096
Fax: +1 585 223 9180
security.sales@us.bosch.com
www.boschsecurity.us

Europe, Middle East, Africa:
Bosch Security Systems B.V.
P.O. Box 80002
5600 JB Eindhoven, The Netherlands
Phone: + 31 40 2577 284
Fax: +31 40 2577 330
emea.securitysystems@bosch.com
www.boschsecurity.com

Asia-Pacific: **Represented by**
Robert Bosch (SEA) Pte Ltd, Security Systems
11 Bishan Street 21
Singapore 573943
Phone: +65 6258 5511
Fax: +65 6571 2698
apr.securitysystems@bosch.com
www.boschsecurity.com

© Bosch Security Systems Inc. 2010 | Data subject to change without notice
T1496775179 | Cur: en-US, V5, 4 Jul 2010

BOSCH
Invented for life

AMC2 - Access Modular Controller

- **Intelligent access manager for one to eight entrances**
- **Four interfaces include the reader power supply**
- **Standard 2 GB compact flash**
- **LCD display for displaying information**
- **Self-controlling send and receive switching**
- **Individual electronic verification of plugs and outputs**
- **Input for an externally connected tamper contact**

The AMC2 (Access Modular Controller) is used as an access controller in the access control systems ACE (ACCESS ENGINE) from version 2.0 onward, Access Personal Edition, and Access Professional Edition. The device controls a group of one to eight access points. These access points, also known as entrances, mainly consist of doors, gates, barriers, turn stiles, revolving doors, mantraps, ID card readers, door opening elements and sensors. The AMC2 can control up to eight ID card readers (depending on the reader type) and is designed for fully processing the access logic at the assigned entrances.

Status checks can be carried out using the eight analog inputs. The eight relay outputs are used to activate the door opening elements and/or generate the security activation and signaling. The AMC2 stores all necessary information in a battery-buffered memory and a compact flash storage element so that, even when the unit is offline, it is able to carry out independent authorization checks on access points, take access decisions, control closing/opening elements and register movement events.

System Overview

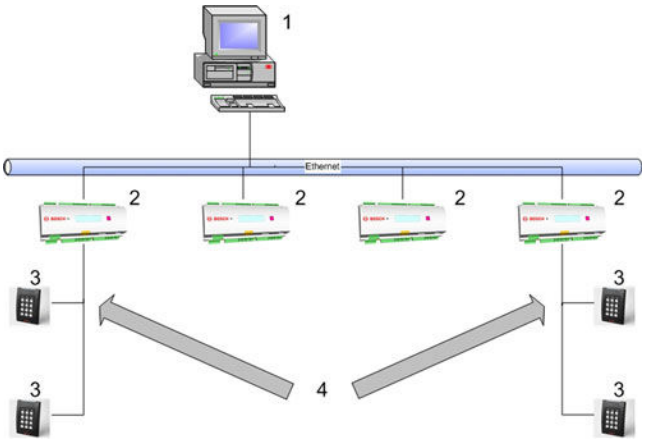

1 = Host computer
2 = AMC2
3 = Card reader
4 = Communication and power supply

As shown in the diagram, the AMC2 is integrated between the host system (e.g. Access Engine) and the peripheral devices.

They are connected to the host system via RS485, RS232 (e.g. modem operation) or Ethernet, depending on the size of the system. The relevant host interface is selected during installation. All three interfaces are available on the device by default. With RS485 operation, a maximum of eight AMC2's can be connected to one party line.

There are up to four slots on the peripheral bus for readers, including the slot for the power supply.

Functions

- Storing downloaded data as listed below:
  - Master data
  - Authorizations
  - Access models
  - Display texts
  - Reader configurations
- Interpretation of transaction data from reader
  - Authorization check
  - Host request
  - PIN code
- Control/monitoring
  - Denial or door release
  - Switching alarm
  - Door statuses
  - Reader operation statuses
  - Internal alarm statuses
- Messages to Access Engine
  - Host requests
  - Transaction data for storing
  - Error and malfunction messages
  - Alarm messages
- Power supply for
  - Readers
  - Door openers
  - Contact current feeds

Installation/Configuration Notes

Power supply

An external power supply (10 to 30 V DC) for the AMC2 is connected to the first (positive) and third pin (negative).

When using an uninterruptible power supply (UPS), the relevant UPS output relay is connected to the pins

- 4 and 7 for alternating current
- 5 and 7 for the battery
- 6 and 7 for direct current

Otherwise, these pins will short-circuit.

Host connections

RS232 host interfaces

The Access Engine application administers up to 32 serial direct connections (ports), theoretically allowing 32 AMC2's to be directly connected in series.

Note Since PCs only have a maximum of two COM interfaces by default, the following connection variants are preferable for configurations with more than two AMC2's:

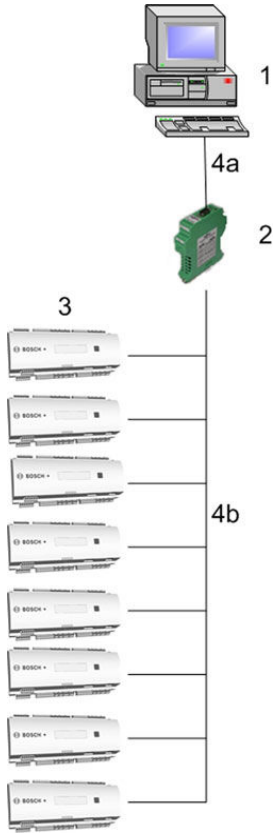

1 = Host computer
2 = RS232/485 AMC-MUX converter
3 = AMC2
4a = RS232 connection
4b = RS485 connection: Up to eight AMC2's can be connected to one RS485 interface for each AMC-MUX.

The AMC-MUX interface converter should be used if more than two AMC2's are connected.

The interface converter generates an RS485 bus (2 or 4-wire) from a COM port and thus allows up to eight AMC2's to be connected with the RS485-typical distances (1200 m/ 3900 ft.).

Alternatively, the RS485 host interface (2 or 4-wire) can be activated in the AMC2 via a jumper. There are two sets of connection points; one for the incoming and one for the outgoing bus system.

Quantity restrictions

- Please follow the Access Engine installation and configuration instructions regarding the maximum number of access controllers on one access control system and the number of cardholders.
- Max. 4 access points/entrances
- Max. 4 ID card readers
- Max. 3 peripheral devices via internal RS485 bus
- Max. 200,000 cardholders

ID card reader connections

Wiegand interfaces

The AMC2 4W has four connections for connecting up to four ID card readers.

ID card reader and door control element interfaces are split into four channels, each with four connection plugs.

The following definitions apply to the Wiegand interface:

- 10-wire interface (incl. shield)
- Maximum cable length of 158 m (500 ft.) to ID card reader
- 26-bit Wiegand format
- 37-bit Wiegand format

Default configuration of the Wiegand interface on the ID card reader:

1	12V+ reader power supply
2	12V- reader power supply
3	Data line 0
4	Data line 1
5	Shield
6	Green LED
7	Red LED
8	Acoustic signal
9	Delay
10	Show card

RS485 interfaces

The AMC2 4R4 has four connections for connecting up to eight ID card readers. The interfaces are divided to two busses – all possible readers (up to eight) can be connected to one interface.

RS485 interface definition:

- 2-wire interface: Using the 10-pin pluggable connector.
- Max. length of the bus: 1200 m
- Transfer rates: 9,6 or 19,2 kBit/s

Default configuration of the Rs485 interface on the ID card reader:

1	12V+ reader power supply
2	12V- reader power supply
3	Shield
4	Data RxTx+
5	Data RxTx-
6	Data shield (PAG)
7	Not connected
8	Not connected
9	Not connected
10	Not connected

-

Reader and door models

The AMC2 controls the connected reader via predefined door models.

Door models govern in accordance with the relevant security requirements

- Number and usage of the readers connected to the AMC2, e.g. input and output readers, input readers and buttons etc.
- Number and application type of the AMC inputs, e.g. door status, output button, revolving door position, GMA etc.
- Number and usage of AMC outputs, e.g. door opener, mantrap contact, signal light switching etc.

The maximum number of entrances to be managed by one AMC2 is ultimately defined by the door models used and their requirements regarding readers and inputs/outputs.

Note Therefore, when planning an access system, you must first assign the relevant door models to all entrances that are to be controlled. Only then can you configure the AMC reader.

Voltage equalization - grounding

- Different voltages can be equalized using jumpers with protective ground.
- A line (shield, equipotential bonding line) with protective ground can only be connected in one position.
- For further instructions, please see the operating manual!

Contacts

Inputs

The eight analog inputs can be used as digital or analog contacts. For analog use, resistance values can be specified that make it possible to carry out a further check for cable breaks and short-circuits.

Relay outputs

The relay outputs offer the following functions:

- The outputs can operate with potential free contacts for external power supply (dry mode).
- The outputs can operate using the internal voltage of power supply (wet mode).
- Only ohm resistive loads can be connected to the relay.
- Inductive loads must be bypassed via recovery diodes. These diodes (1N4004) are enclosed.

General instructions

- AMC2 and related equipment should be mounted in a "secured area".
- Detailed connection conditions are specified in the operating manual!
- After purchase, primary AC power must be carried out by a licensed electrician.

Technical Specifications

Hardware	CPU RENESAS M32C84
	512 kB-EPROM/FLASH
	256 kB-SRAM
	Serial EEPROM
	RTC
	Pluggable 2 GB compact flash
	Battery for SRAM and RTC
	Host address can be set via sliding switch
	Host interface: - RS485 (2- or 4-wire); opto-decoupled - RS232 - Ethernet 10/100BaseT (TCP/IP) with RJ45
	4 reader interfaces: - Wiegand or - RS-485, 2-wire, opto-coupled, 19.200 Bd
	8 relay outputs: - max. switching voltage: 30 V DC - max. switching current: 1,25 A
	8 monitored analog inputs
	Tamper switch
	Reset button
Temperature	0°C to +45°C (32°F to 113°F)
Power supply	10 to 30 VDC, max. 60 VA Available for external devices: 55 VA
Environment class	IP 30
Housing	Base: PPO (UL 94 V-0) Upper: Polycarbonate (UL 94 V-0)
Color	White
Dimensions	WxHxD: 232 x 90 x 63 mm (9.13 x 3.54 x 2.48 in.)
Weight	Approx. 0.53 kg (1.17 lb)
Type	Rail mounting

Ordering Information

AMC2 4W-NET-CF - Wiegand Interfaces Four Wiegand card reader interfaces, network connection to the host system and Compact Flash memory (2 GB).	**APC-AMC2-4WCF**
AMC2 4R4-CF - RS-485 Interfaces Four RS-485 card reader interfaces, network connection to the host system and Compact Flash memory (2 GB).	**APC-AMC2-4R4CF**
Accessories	
AMC2 8I-8O-EXT 8 input/output extension board, up to three per AMC, can be combined with the AMC2 16I-EXT and the AMC2 16I-16O-EXT	**API-AMC2-8IOE**
AMC2 16I-16O-EXT 16 input/output extension board, up to three per AMC, can be combined with the AMC2 16I-EXT and the AMC2 8I-8O-EXT	**API-AMC2-16IOE**
AMC2 16I-EXT 16 input extension board, up to three per AMC, can be combined with the AMC2 16I-16O-EXT and the AMC2 8I-8O-EXT	**API-AMC2-16IE**
AMC2 4W-EXT - Wiegand Extension Board The extension module AMC2 4W-EXT is equipped with four Wiegand type reader-interfaces plus eight inputs and eight outputs. Hence with the AMC2 4W-EXT it is possible to double the number of readers on an AMC2 4W from 4 to 8.	**API-AMC2-4WE**
AMC2 ENC-EMEA - Enclosure This enclosure is used for securely mounting and housing the AMC2 and a power supply (e.g. AMC PBC60).	**AEC-AMC2-EMEA01**
AMC2 ENC-UL1 - Enclosure - Small AMC2 enclosure with single din rail.	**AEC-AMC2-UL1**
AMC2 ENC-UL2 - Enclosure - Large AMC2 enclosure with two din rails.	**AEC-AMC2-UL2**
AEC-PANEL19-4DR - Mounting plate with four DIN rails Mounting plate with four DIN rails for 19" racks to connect max. four AMC2 devices.	**AEC-PANEL19-4DR**
AEC-PANEL19-UPS - Mounting plate with two DIN rails Mounting plate with two DIN rails, a battery bracket, and screw sockets for the power supply to mount into 19" racks.	**AEC-PANEL19-UPS**
PBC-60 - power supply and battery charger A power supply unit with an integrated battery charging device.	**APS-PBC-60**
Gel Battery 12 V / 7.2 Ah (DU = 1 unit)	**IPP-12V-7.2Ah**
AMC RAIL-250 mounting rail Mounting rail (250 mm) for mounting the access controller AMC-4W without the metal housing AMC ENC-V1.	**ACX-RAIL-250**

Ordering Information

AMC RAIL-400 mounting rail Mounting rail (400 mm) for mounting the AMC-4W, AMC PS-12V-60W and AMC UPS-12V when the metal housing AMC ENC-V1 is not used.	**ACX-RAIL-400**
AMC-MUX interface converter Interface converter – RS-232 into RS-485/422	**ACX-AMC-MUX**
AMC-MUX-EXT interface extension An extension module for the AMC-MUX to create a network star topology.	**ACX-AMC-MUXE**

Americas:
Bosch Security Systems, Inc.
130 Perinton Parkway
Fairport, New York, 14450, USA
Phone: +1 800 289 0096
Fax: +1 585 223 9180
security.sales@us.bosch.com
www.boschsecurity.us

Europe, Middle East, Africa:
Bosch Security Systems B.V.
P.O. Box 80002
5600 JB Eindhoven, The Netherlands
Phone: + 31 40 2577 284
Fax: +31 40 2577 330
emea.securitysystems@bosch.com
www.boschsecurity.com

Asia-Pacific: **Represented by**
Robert Bosch (SEA) Pte Ltd, Security Systems
11 Bishan Street 21
Singapore 573943
Phone: +65 6258 5511
Fax: +65 6571 2698
apr.securitysystems@bosch.com
www.boschsecurity.com

© Bosch Security Systems Inc. 2010 | Data subject to change without notice
T3538102027 | Cur: en-US, V14, 4 Jul 2010 | Src: en-US, V1, 16 Aug 2006

APS-PSU-60 Power supply unit

www.boschsecurity.com

BOSCH
Invented for life

- Supports 12 V/7 Ah, 12 V/14 Ah and 24 V/7 Ah batteries
- Selectable 12 VDC or 24 VDC voltage output
- Selectable 5 A @ 12 VDC or 2.5 A @ 24 VDC current output
- Overvoltage protection
- Regulates battery charging voltage

The PSU-60 is a power supply unit with an integrated battery charging device.

Functions

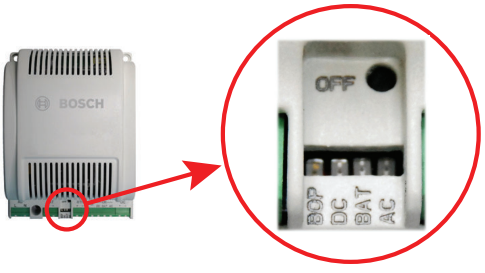

The PSU-60 includes the following LED voltage status indicators:

- If the input voltage (AC) is greater than 85 VAC, the green LED lights up next to AC and the AC relay is closed.
- If the output voltage (DC) is greater than 12 V or 24 V (depending on the mode), the green LED lights up next to DC and the DC relay is closed.
- If the battery voltage is greater than 11 V or 22 V (depending on the mode), the green LED lights up next to BAT and the BAT relay is closed.

The following applies to the battery mode:

- If the input voltage is less than 85 VAC, the power supply switches to “Battery operation” mode and the yellow LED lights up next to BOP.
- The OFF button is only activated in “Battery operation” mode. Press this button to switch off the PSU-60.
- Restart is only possible when the alternating current supply is restored.
- This power supply unit can be switched to 12 V or 24 V mode. To do this, the switch must be configured as shown below, when there is **no voltage input** on the power supply.

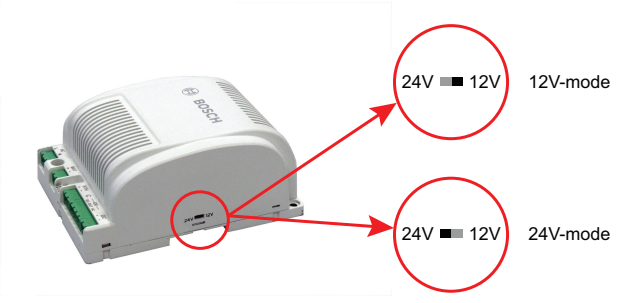

Notice
The power supply must only be installed by qualified personnel.

Certifications and approvals

The product is classified in accordance with the following standards:

- EN 55022 Class B
- EN 55024
- IEC / UL / EN 60950 & CSA (product safety)
- CE
- RCM (Australia)
- RoHS 2.0

Please refer to http://www.boschsecurity.com for further information.

Installation/configuration notes

The PSU-60 can be mounted on rails and installed in the AMC housing. The PSU-60 dimensions are shown in the diagrams below:

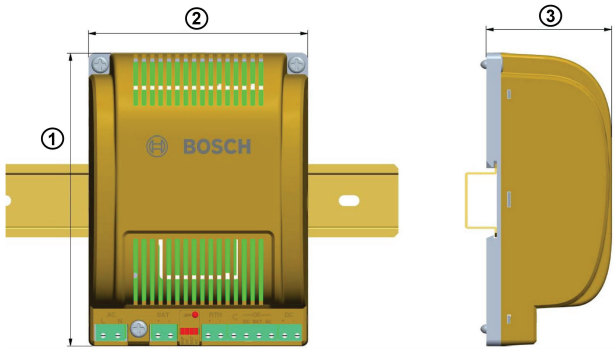

1	*140 mm (5.51 in.)*	*3*	*60 mm (2.36 in.)*
2	*105 mm (4.13 in.)*		

Alternatively, it can be screw-mounted directly to the wall. There are pre-drilled holes for this purpose on the base of the housing. These holes have the following dimensions:

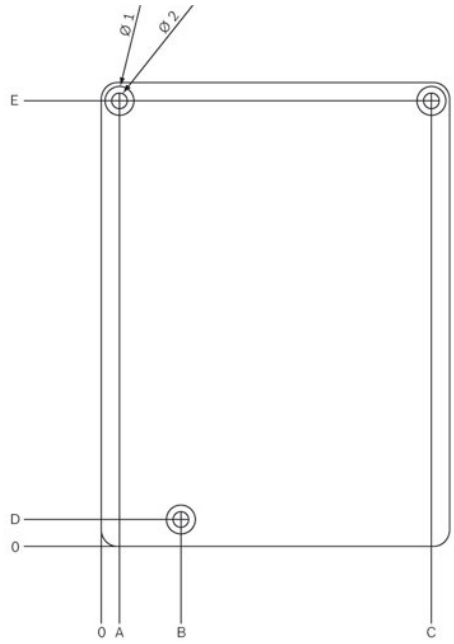

Ø1	*8.6 mm (0.34 in.)*	*C*	*99.5 mm (3.92 in.)*
Ø2	*4.5 mm (0.18 in.)*	*D*	*8.1 mm (0.32 in.)*
A	*5.5 mm (0.22 in.)*	*E*	*134.5 mm (5.30 in.)*
B	*24 mm (0.94 in.)*		

** Include tolerances (in mm)*

0 – 5 mm = ±0.10	*30 – 100 mm = ±0.30*
5 – 30 mm = ±0.20	*100 – 500 mm = ±0.50*

The following diagram shows the connections to the AMC.

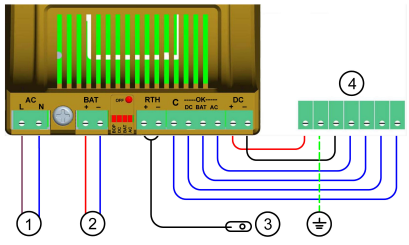

1	*AC power*	*3*	*Temperature sensor #*
2	*Battery connection*	*4*	*Power supply to AMC wiring connection **

* For cables exceeding 3m, it is recommended to use a cylindrical Ferrite Core:
– impedance @ 100 MHz = 90 or 140 Ω
– min. inner diameter = 7.0 ± 0.8 mm
– 100 MHz > Freq > 25 MHz

Parts included

Quantity	Component
1	Power supply
1	Plug 1 x 2-pin for mains (primary AC) connection 3 x 2-pin 1 x 4-pin
1	NTC resistor
1	Accompanying documentation (installation manual)

Technical specifications

Power Supply Output is Class 2 Power Limited.

Output values

Output voltage:	12V mode 24V mode	10-15V 20-30V
Output current:	12V mode 24V mode	max 5A max. 2.5A
Output power:		60 W (constant)
Over voltage protection at:	12V mode 24V mode	16.5V 33V

Input values

Input voltage:	AC 100-240V~, 50-60Hz
Input current (AC):	Max. 2A, to the specified max. load at 85 VAC
Inrush current for 1ms:	AC 100-240V 30A

Input protection in case of a failure, the primary voltage is cut off from the power supply by a fuse.

Battery information

Output voltage:	12V mode 24V mode	10-15V 20-30V
Output current for charging the battery:	12V mode 24V mode	700mA * 350mA †

* *according to battery capacity 14Ah*
† *according to battery capacity 7Ah*

Periodic battery checks - approx. every 5 minutes.

Protection from total battery discharge:	12V mode 24V mode	9.5V 19V

The power supply switches to normal operation as soon as the AC incoming voltage has normalized.

Temperature equalization is performed by an external NTC resistor.

Reverse polarity protection.

Environment variables

Working temperature:	-20°C to 60°C (-4°F to 140°F)
Working temperature (UL installations only):	0°C to 49°C (32°F to 120°F)
Storage temperature:	-40°C to 85°C (-40°F to 185°F)
Relative humidity:	5% to 95%

Ordering information

APS-PSU-60 Power supply unit
A power supply unit with an integrated battery charging device, that supports 12 V/7 Ah, 12 V/14 Ah and 24 V/7 Ah batteries, with selectable 12 VDC or 24 VDC voltage output.
Order number **APS-PSU-60**

Represented by:

Europe, Middle East, Africa:
Bosch Security Systems B.V.
P.O. Box 80002
5600 JB Eindhoven, The Netherlands
Phone: + 31 40 2577 284
emea.securitysystems@bosch.com
emea.boschsecurity.com

Germany:
Bosch Sicherheitssysteme GmbH
Robert-Bosch-Ring 5
85630 Grasbrunn
Germany
www.boschsecurity.com

North America:
Bosch Security Systems, LLC
130 Perinton Parkway
Fairport, New York, 14450, USA
Phone: +1 800 289 0096
Fax: +1 585 223 9180
onlinehelp@us.bosch.com
www.boschsecurity.us

Asia-Pacific:
Robert Bosch (SEA) Pte Ltd, Security Systems
11 Bishan Street 21
Singapore 573943
Phone: +65 6571 2808
Fax: +65 6571 2699
apr.securitysystems@bosch.com
www.boschsecurity.asia

© Bosch Security Systems 2020 | Data subject to change without notice
12144857739 | en, V10, 07. Jul 2020

LECTUS secure reader series (Wiegand)

www.boschsecurity.com

BOSCH
Invented for life

- 13.56 MHz proximity readers for connecting to access controllers with Wiegand interfaces
- Suitable for indoor and outdoor use
- Supports multiple technologies (iCLASS® Seos™ and iCLASS SE credentials, standard iCLASS, MIFARE®, and MIFARE DESFire® EV1, serial number of ISO14443A credentials)
- Interoperable with a growing range of technology environments and form factors

System overview

Ideal for new and existing installations, LECTUS secure readers provide customers the assurance that their existing investments can be leveraged to enhance their system as business requirements change.
The technology-independent readers also support iCLASS Seos and iCLASS SE credential platforms, as well as standard iCLASS, MIFARE, MIFARE DESFire EV1 and serial number from ISO 14443A credentials (32Bit standard, 56 Bit optional).
Available with four different form factors LECTUS secure readers meet nearly all installation requirements for indoor and outdoor use.

Installation/configuration notes

Please follow the general mounting instructions for the proximity reader regarding the distance between readers and metallic surfaces.

Parts included

Quantity	Component
1	Reader body with board
1	Mounting material
1	Installation guide

Technical specifications

Dimension (W x H x D)	See ordering information
Weight (g)	See ordering information
Housing Material	Polycarbonate (UL 94)
Color	Black
Display	Mulitcolored RGB LED bar
Panel connection	Wiegand, pigtail
Operating temperature	- 35 °C to 65 °C (-31 °F to 150 °F)
Humidity	5 to 95%, no condensation water
Environmental rating	IP 55
Operating Voltage Range	-25 °C to 65 °C (-13 °F to 150 °F)
Card compatibility	iCLASS, iCLASS SE, MIFARE, MIFARE DESFire EV1, serial number from ISO 14443A credentials (32 bit standard, 56 bit optional)
Operating freqeuncy	13.56 MHz
Reading distance	• 5 to 8.6 cm with iCLASS cards • 4 to 7 cm with MIFARE cards • 1.3 to 4.6 cm with tags/fobs

Ordering information

LECTUS secure 1000 WI
iCLASS/MIFARE reader, mini-mullion size, suited for mullion-mounted door installations, U.S. single-gang J-box or any flat surface, pigtail, 4.8 x 10.3 x 2.3 cm, 113g net
Order number **ARD-SER10-WI**

LECTUS secure 3000 WI
iCLASS/MIFARE reader, EU / APAC Square Size, square reader is designed to mount to and cover standard European and Asian back boxes, pigtail, 8.4 x 8.4 x 2.3 cm, 148g net
Order number **ARD-SER30-WI**

LECTUS secure 4000 WI
iCLASS/MIFARE reader, wall switch size, designed to mount and cover single gang switch boxes primarily used in the Americas, includes a slotted mounting plate for European and Asian back box spacing, pigtail, 8.4 x 12.2 x 2.4 cm, 220g net
Order number **ARD-SER40-WI**

LECTUS secure 5000 W1
iCLASS/MIFARE reader, wall switch size, designed to mount and cover single gang switch boxes primarily used in the Americas, slotted mounting plate for European and Asian back box spacing, pigtail, keypad (4x3), 8.5 x 12.2 x 2.8 cm, 256g net
Order number **ARD-SERK40-W1**

Accessories
Surface-mount panel for LECTUS secure 1000 WI readers, 10 items/packaging unit
Order number **ARD-R10-AP-G**

Represented by:

Americas:
Bosch Security Systems, Inc.
130 Perinton Parkway
Fairport, New York, 14450, USA
Phone: +1 800 289 0096
Fax: +1 585 223 9180
security.sales@us.bosch.com
www.boschsecurity.us

Europe, Middle East, Africa:
Bosch Security Systems B.V.
P.O. Box 80002
5617 BA Eindhoven, The Netherlands
Phone: + 31 40 2577 284
Fax: +31 40 2577 330
emea.securitysystems@bosch.com
www.boschsecurity.com

Asia-Pacific:
Robert Bosch (SEA) Pte Ltd, Security Systems
11 Bishan Street 21
Singapore 573943
Phone: +65 6571 2808
Fax: +65 6571 2699
apr.securitysystems@bosch.com
www.boschsecurity.asia

China:
Bosch (Shanghai) Security Systems Ltd.
201 Building, No. 333 Fuquan Road North IBP
Changning District, Shanghai
200335 China
Phone +86 21 22181111
Fax: +86 21 22182398
www.boschsecurity.com.cn

America Latina:
Robert Bosch Ltda Security Systems Division
Via Anhanguera, Km 98
CEP 13065-900
Campinas, Sao Paulo, Brazil
Phone: +55 19 2103 2860
Fax: +55 19 2103 2862
latam.boschsecurity@bosch.com
www.boschsecurity.com

© Bosch Security Systems 2014 | Data subject to change without notice
13846655883 | en, V3, 13. Jun 2014

AEC-AMC2-UL02 AMC enclosure with 2 DIN rails

www.boschsecurity.com

BOSCH
Invented for life

- Easy-to-install steel enclosure
- UL 294 system certified
- 2 DIN rails
- For installation of two AMC2 controllers or two AMC2 extension boards, one power supply unit and two batteries

This enclosure has been produced in accordance with UL guidelines and is used for securely mounting and housing the AMC2 and a power supply unit.

System overview

The AMC2 enclosure is designed for indoor wall mounting.
It ensures a secure installation and housing of two AMC2 or two AMC2 extension boards, one power supply unit and two batteries.
The steel housing includes an LED for power indication, a tamper contact and pre-stamped knock-outs.

Installation/configuration notes

The external dimensions and the securing screw holes are shown in this diagram:

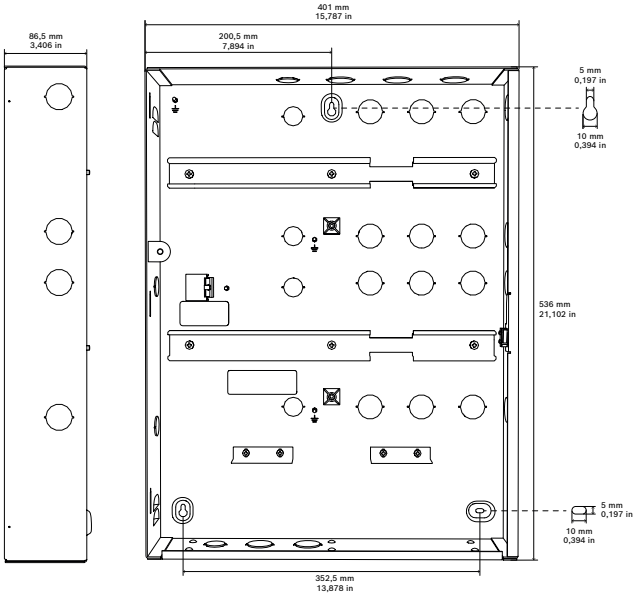

Parts included

Quantity	Component
3	Cable ties for securing the cables
3	Screws and screw anchors for wall mounting
1	LED
1	Fuse and fuse holder
1	Installation manual
1	Safety instructions

Technical specifications

Mechanical

Mounting	Wall mount
Dimensions (H × W × D)	541 mm × 411 mm × 88 mm (21.3 in. × 16.2 in. × 3.5 in.)
Weight	8 kg (17.6 lb.)
Color	White
IP code	30

Ordering information

AEC-AMC2-UL02 AMC enclosure with 2 DIN rails
Compliant with UL294 system certification for AMC2.
Order number **AEC-AMC2-UL02**

Accessories

APC-AMC2-2WCF Door controller WI, 2 readers
Two Wiegand interfaces for up to 2 card readers, network connection to the host system and Compact Flash memory (2 GB). Host data transfer encrypted.
Order number **APC-AMC2-2WCF**

ADS-AMC2-2WCF Door controller WI, 2 readers
Available in China only.
Two Wiegand interfaces for up to 2 card readers, network connection to the host system and Compact Flash memory (2 GB). Host data transfer encrypted.
Order number **ADS-AMC2-2WCF**

APC-AMC2-4WCF Door controller Wiegand with CF card
Four Wiegand interfaces for up to 4 card readers, network connection to the host system and Compact Flash memory (2 GB). Host data transfer encrypted.
Order number **APC-AMC2-4WCF**

ADS-AMC2-4WCF Door controller Wiegand with CF card
Available in China only.
Four Wiegand interfaces for up to 4 card readers, network connection to the host system and Compact Flash memory (2 GB). Host data transfer encrypted.
Order number **ADS-AMC2-4WCF**

APC-AMC2-4R4CF Door controller RS485 with CF card
Four RS-485 interfaces for up to 8 card readers, network connection to the host system and Compact Flash memory (2 GB). Host data transfer encrypted. Reader data transfer encrypted according to reader capabilities.
Order number **APC-AMC2-4R4CF**

ADS-AMC2-4R4CF Door controller RS485 with CF card
Available in China only.
Four RS-485 interfaces for up to 8 card readers, network connection to the host system and Compact Flash memory (2 GB). Host data transfer encrypted. Reader data transfer encrypted according to reader capabilities.
Order number **ADS-AMC2-4R4CF**

API-AMC2-8IOE Extention board with 8-input 8-output
8 input/output extension board, up to three per AMC, can be combined with the AMC2 16I-EXT and the AMC2 16I-16O-EXT.
Order number **API-AMC2-8IOE**

ADS-AMC2-8IOE Extention board with 8-input 8-output
Available in China only.
8 input/output extension board, up to three per AMC, can be combined with the AMC2 16I-EXT and the AMC2 16I-16O-EXT.
Order number **ADS-AMC2-8IOE**

API-AMC2-16IOE Extention board with 16-input 16-output
16 input/output extension board, up to three per AMC, can be combined with the AMC2 16I-EXT and the AMC2 8I-8O-EXT.
Order number **API-AMC2-16IOE**

ADS-AMC2-16IOE Extention board with 16-input 16-output
Available in China only.
16 input/output extension board, up to three per AMC, can be combined with the AMC2 16I-EXT and the AMC2 8I-8O-EXT.
Order number **ADS-AMC2-16IOE**

API-AMC2-16IE Extention board with 16-input
16 input extension board, up to three per AMC, can be combined with the AMC2 16I-16O-EXT and the AMC2 8I-8O-EXT.
Order number **API-AMC2-16IE**

ADS-AMC2-16IE Extention board with 16-input
Available in China only.
16 input extension board, up to three per AMC, can be combined with the AMC2 16I-16O-EXT and the AMC2 8I-8O-EXT.
Order number **ADS-AMC2-16IE**

API-AMC2-4WE Door controller Wiegand extension
The extension module AMC2 4W-EXT is equipped with four Wiegand type reader-interfaces plus eight inputs and eight outputs. Hence with the AMC2 4W-EXT it is possible to double the number of readers on an AMC2 4W from 4 to 8.
Order number **API-AMC2-4WE**

ADS-AMC2-4WE Door controller Wiegand extension
Available in China only.
The extension module AMC2 4W-EXT is equipped with four Wiegand type reader-interfaces plus eight inputs and eight outputs. Hence with the AMC2 4W-EXT it is possible to double the number of readers on an AMC2 4W from 4 to 8.
Order number **ADS-AMC2-4WE**

API-AMC2-16ION Standalone controller for BIS with OPC
Standalone controller with inputs and outputs only. Compatible with BIS in combination with OPC Server only.
Order number **API-AMC2-16ION**

ADS-AMC2-16ION Standalone controller for BIS with OPC
Available in China only.
Standalone controller with inputs and outputs only. Compatible with BIS in combination with OPC Server only.
Order number **ADS-AMC2-16ION**

APS-PSU-60 Power supply unit
A power supply unit with an integrated battery charging device, that supports 12 V/7 Ah, 12 V/14 Ah and 24 V/7 Ah batteries, with selectable 12 VDC or 24 VDC voltage output.
Order number **APS-PSU-60**

D126 Battery, 12V 7Ah
A rechargeable sealed lead-acid power supply used as a secondary power supply or in auxiliary or ancillary functions.
Order number **D126**

Represented by:

Europe, Middle East, Africa:
Bosch Security Systems B.V.
P.O. Box 80002
5600 JB Eindhoven, The Netherlands
Phone: + 31 40 2577 284
emea.securitysystems@bosch.com
emea.boschsecurity.com

Germany:
Bosch Sicherheitssysteme GmbH
Robert-Bosch-Ring 5
85630 Grasbrunn
Germany
www.boschsecurity.com

North America:
Bosch Security Systems, Inc.
130 Perinton Parkway
Fairport, New York, 14450, USA
Phone: +1 800 289 0096
Fax: +1 585 223 9180
onlinehelp@us.bosch.com
www.boschsecurity.us

Asia-Pacific:
Robert Bosch (SEA) Pte Ltd, Security Systems
11 Bishan Street 21
Singapore 573943
Phone: +65 6571 2808
Fax: +65 6571 2699
apr.securitysystems@bosch.com
www.boschsecurity.asia

© Bosch Security Systems 2020 | Data subject to change without notice
29253705483 | en, V3, 10. Feb 2020

DS160 Series High Performance Request-to-exit Detectors

www.boschsecurity.com

BOSCH
Invented for life

- Door monitor with sounder alert
- Sequential Logic Input (SLI)
- Internal vertical pointability
- Wrap-around coverage pattern with precise pattern control
- Up to 64 second adjustable latch time

The DS160 Series consists of the DS160 Detector (light gray) and the DS161 Detector (black) specifically designed for Request-to-exit (REX) applications. With features such as timers, door monitor with sounder alert, and pointable coverage, the DS160 and DS161 have the flexibility to meet the most stringent REX requirements. The exclusive Sequential Logic Input (SLI) provides added security that is not offered in any other REX device.

Functions

Sequential Logic Input (SLI)
The SLI terminal allows connection of a second device to require sequential detection. This eliminates the possibility that an object that is slid through the door or underneath the door will activate the detector. This input can also be used to lock the sensor if motion is present outside the premises.

Door Monitor
The sensor can monitor a door contact to allow special control of the internal relay. For example, if the door is opened within the relay time period, the sensor can be programmed to halt the timer. If the door is not opened within a specific time period, the relay can be programmed to deactivate.

Sounder Alert
An integrated sounder can be programmed to activate if the door is left open too long. The sounder volume is fully adjustable to 85 dB.

Keycard Input
The keycard input allows the sensor relay to be controlled from an external source, such as an access control system or card reader.

Certifications and approvals

Europe Complies with EN50131-1 Grade 2

Region	Regulatory compliance/quality marks	
Australia	RCM	[DS160]
Europe	CE	EMC, LVD, RoHS [DS160, DS161]
USA	UL	ALVY: Access Control Systems Units (UL294) [DS160, DS161]

Installation/configuration notes

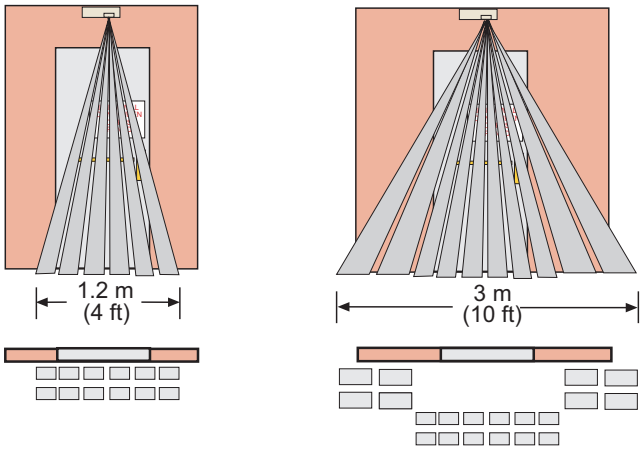

Front View
Mounted on wall above door and mounted on ceiling .75 m (2.5 ft) in front of the door.

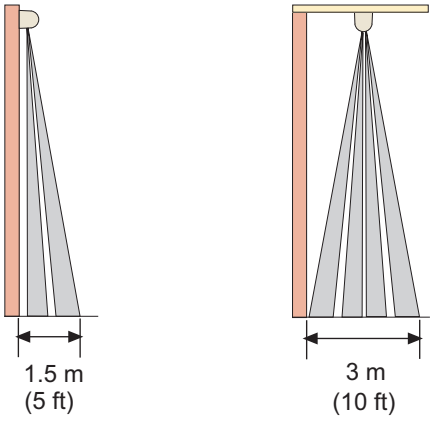

Side View
The higher that you mount the unit, the larger the coverage area. Do not mount the DS160/DS161 more than 4.6 m (15 ft) above the floor.
Side view of coverage pattern with the unit mounted at 4.6 m (15 ft) above the floor with the lens pointed straight down.

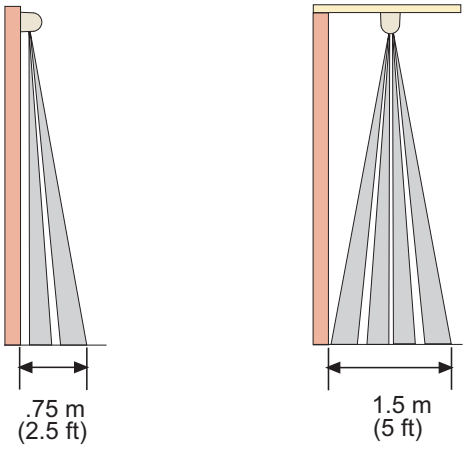

Side View

The higher that you mount the unit, the larger the coverage area. Do not mount the DS160/DS161 more than 4.6 m (15 ft) above the floor.
Side view of coverage pattern with the unit mounted at 4.6 m (15 ft) above the floor with the lens pointed straight down.

Coverage Information

The coverage (detection area) varies depending on the mounting height above the floor, angle of the lens, and whether the unit is mounted on a wall above the door or on the ceiling. The coverage is 2.4 m x 3 m (8 ft x 10 ft) The coverage patterns for the detector at a height of 2.3 m (7.5 ft) are shown. The coverage pattern increases or decreases with height and detector alignment.

Notice
When you mount the unit on the wall and the lens points straight down, some detection zones point toward the wall and do not detect movement.

The diagrams depict views of the coverage pattern with the detector mounted at 2.3 m (7.5 ft) above the floor with the lens pointed straight down. Zones that are pointed toward the wall are not shown.

Technical specifications

Environmental	
Operating Temperature:	-29°C to +49°C (-20°F to +120°F) For UL Certificated installations, 0°C to +49°C (+32°F to +120°F)
Radio Frequency Interference (RFI) Immunity:	No alarm or setup on critical frequencies in the range from 26 MHz to 1000 MHz at 50 V/m
Complies with Environmental Class II (EN50130-5)	
Mechanical	
Dimensions:	4.5 cm x 17.1cm x 4.4 cm (1.80 in. x 6.75 in. x 1.75 in.)
Material:	High impact ABS plastic enclosure
Modes	
Power Loss Default:	Programmable fail-safe or fail-secure modes.
Timer:	Programmable reset accumulative or non-reset counting mode.
Electrical	
Current Draw:	8 mA nominal standby current, 39 mA at 12 VDC in alarm
Voltage:	12 VAC or VDC to 30 VAC or VDC

Alarm Output:	Two Form C relay contacts each rated 1 A at 30 VAC or VDC for resistive loads
Indicators:	1 activation LED
Relay Latch Time:	Adjustable from 0.5 sec to 64 sec.

Ordering information

DS160 Request-to-exit sensor, sounder
For use in request-to-exit (REX) applications. Provides PIR 2.4 m x 3 m (8 ft x 10 ft) coverage, timers, door monitor with sounder alert, and pointable coverage.
Order number **DS160**

EWE-DETCTR-IW 12mths wrty ext detector general
12 months warranty extension
Order number **EWE-DETCTR-IW**

DS161 Request-to-exit sensor, black, sounder
Black enclosure. For use in Request-to-EXit (REX) applications. Provides PIR, 2.4 m x 3 m (8 ft x 10 ft) coverage, timers, door monitor with sounder alert, and pointable coverage.
Order number **DS161**

EWE-DETCTR-IW 12mths wrty ext detector general
12 months warranty extension
Order number **EWE-DETCTR-IW**

Accessories

TP160 Trim plate for DS150 and DS160
A light gray trim plate used when mounting the detector over a standard single-gang box.
Order number **TP160**

TP161 Trim plate for DS151 and DS161, black
A black trim plate used when mounting the sensor over a standard single-gang box.
Order number **TP161**

Represented by:

Europe, Middle East, Africa:
Bosch Security Systems B.V.
P.O. Box 80002
5600 JB Eindhoven, The Netherlands
Phone: + 31 40 2577 284
emea.securitysystems@bosch.com
emea.boschsecurity.com

Germany:
Bosch Sicherheitssysteme GmbH
Robert-Bosch-Ring 5
85630 Grasbrunn
Germany
www.boschsecurity.com

North America:
Bosch Security Systems, LLC
130 Perinton Parkway
Fairport, New York, 14450, USA
Phone: +1 800 289 0096
Fax: +1 585 223 9180
onlinehelp@us.bosch.com
www.boschsecurity.us

Asia-Pacific:
Robert Bosch (SEA) Pte Ltd, Security Systems
11 Bishan Street 21
Singapore 573943
Phone: +65 6571 2808
Fax: +65 6571 2699
apr.securitysystems@bosch.com
www.boschsecurity.asia

© Bosch Security Systems 2021 | Data subject to change without notice
2634909195 | en, V17, 16. Feb 2021