TOA

HORN SPEAKER 30W (WITH TRANSFORMER)

TC-631M

■DESCRIPTION

The TC-631M is a highly intelligible, general-purpose speaker suited to public address announcement applications. Its external speaker component finished with powder coating, and stainless steel screws ensure the unit's weatherproof capability.

■SPECIFICATIONS

Rated Input	30 W
Line Voltage	100 V line or 70 V line
Rated Impedance	100 V line: 330 Ω (30 W), 670Ω (15 W), 1 kΩ (10 W), 2 kΩ (5 W) 70 V line: 170 Ω (30 W), 330 Ω (15 W), 670 Ω (7.5 W), 1 kΩ (5 W), 2 kΩ (2.5 W)
Dispersion (1 to 4k Hz avg.)	85° Horizontal x 85° Vertical
Sensitivity	110 dB (1 W, 1 m)
Frequency Response	200 Hz – 6 kHz
Dust/Water Protection	IP65
Polarity	Hot: Black, Com: White
Operating Temperature	−20 ℃ to +60 ℃ (−4 ℉ to 140 ℉) (must be free from dew condensation)
Finish	Horn flare: Aluminum, off-white, powder coating Reflector horn: ABS resin, off-white Bracket holder: Aluminum, gray, powder coating Bracket: Steel, gray, powder coating Rear cover: ABS resin, gray Screw and bolts: Stainless steel Speaker Cable: Polyvinyl chloride insulated cabtyre cable (6 mm (0.24") in diameter, 600 mm (23.62") in length)
Dimensions	ø500 (W) X 463 (D) mm (ø19.69" X 18.23")
Weight	4.5 kg (9.92 lb)

Note: Avoid installing the speaker in locations which vibrate considerably, or under environments easy to be oil-contaminated.

■APPEARANCE

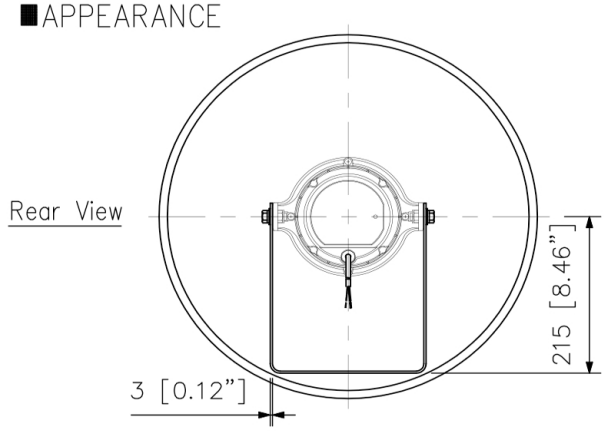

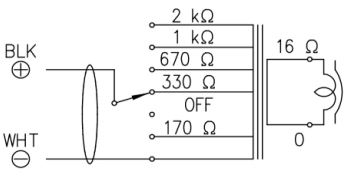

(Transformer connection when the speaker is supplied from the factory)

Wiring diagram

CAUTION
NEVER SET THE SWITCH TO "▭" POSITION FOR 100 V LINE OPERATION, AS DOING SO MAY RESULT IN DAMAGE TO THE SPEAKER.

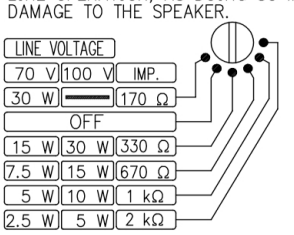

Set the impedance selector to the desired impedance.

Impedance selection

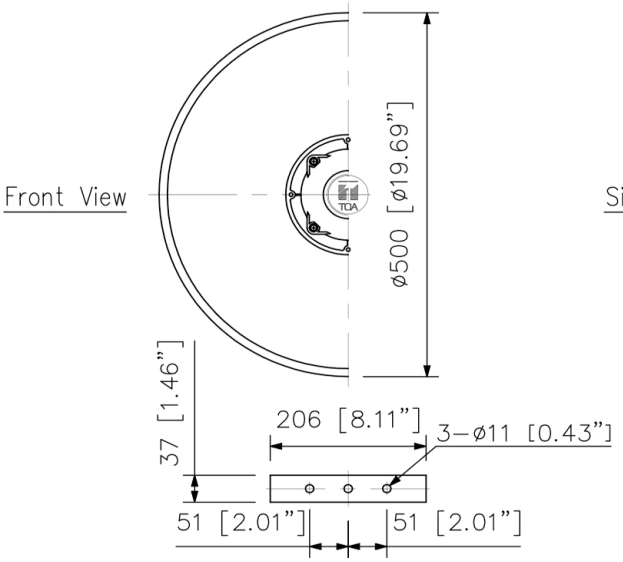

Bracket dimensional diagram

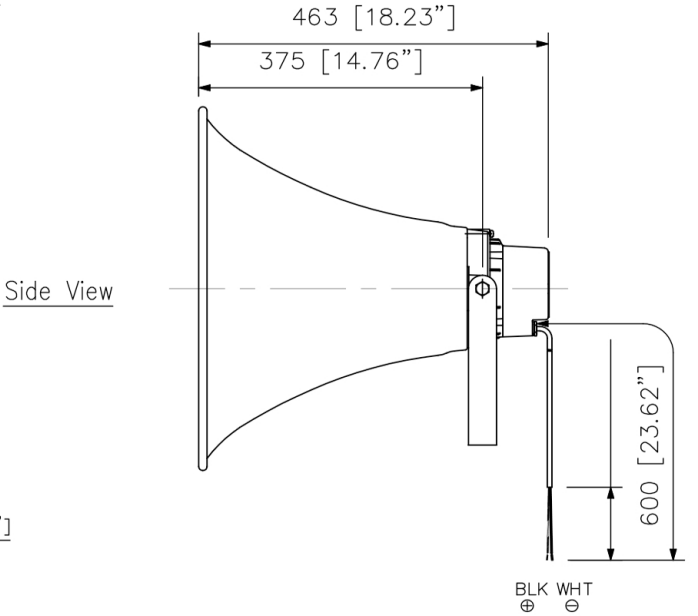

UNIT: mm SCALE: 1/10