TOA

OPERATING INSTRUCTIONS

LINE ARRAY SPEAKERS SR-C8L SR-C8S SR-C15B

RIGGING FRAME SR-RF8

RIGGING SUPPORT BRACKET SR-SB8

TILT JOINT BRACKET SR-TP8

CLUSTER BRACKET SR-CL8

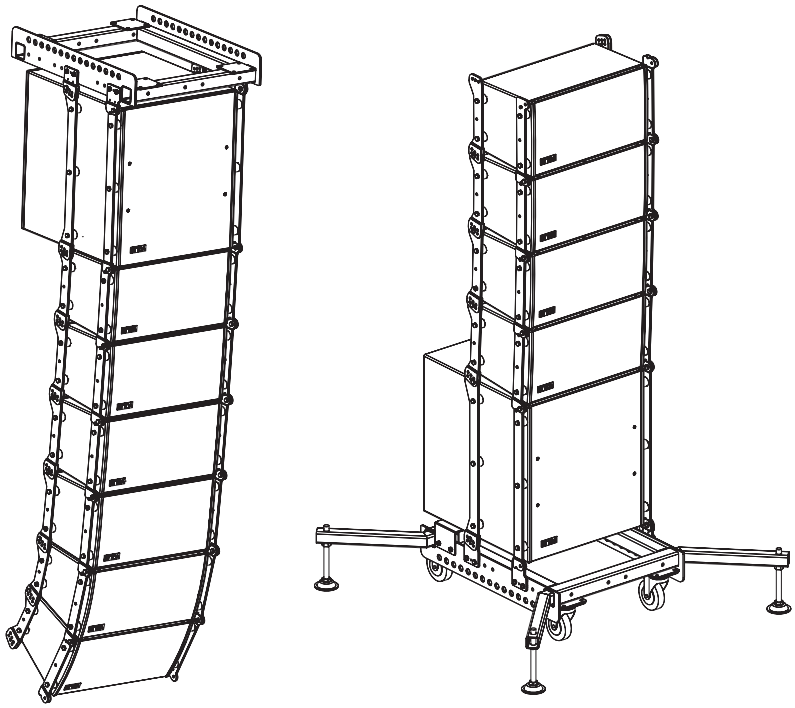

Note that casters must be prepared separately.

Thank you for purchasing TOA Line Array Speaker. Please carefully follow the instructions in this manual to ensure long, trouble-free use of your equipment

TOA Corporation

TABLE OF CONTENTS

1. SAFETY PRECAUTIONS 3

2. GENERAL DESCRIPTION 5

3. FEATURES 5

4. INSTALLATION PRECAUTIONS 5

5. DIMENSIONAL DIAGRAMS
- 5.1. Speaker Systems
  - 5.1.1. SR-C8L Line array speaker 6
  - 5.1.2. SR-C8S Line array speaker 6
- 5.2. Sub-Woofer Speaker System
  - 5.2.1. SR-C15B Line array speaker 7
- 5.3. Frame and Brackets
  - 5.3.1. SR-RF8 Rigging frame 7
  - 5.3.2. SR-SB8 Rigging support bracket 8
  - 5.3.3. SR-TP8 Tilt joint bracket 8
  - 5.3.4. SR-CL8 Cluster bracket 8

6. BI-AMPLIFIER AND SINGLE-AMPLIFIER OPERATIONS
- 6.1. Bi-Amplifier Operation 9
- 6.2. Single-Amplifier Operation 9

7. SWITCHING TO SINGLE-AMPLIFIER OPERATION MODE 10

8. DIGITAL PROCESSOR SETTINGS
- 8.1. SR-C8L and SR-C8S Systems 11
- 8.2. Combined SR-C8L or SR-C8S and SR-C15B Systems 12

9. FLYING SYSTEMS USING THE SR-RF8 RIGGING FRAME
- 9.1. Flying System Outline 13
- 9.2. Assembling the SR-RF8 Rigging Frame 15
- 9.3. Connecting the Rigging Frame to the Speaker 16
- 9.4. Connection Between Speakers 17
- 9.5. About the Flying Installations 18

10. INSTALLING THE FLYING SYSTEM USING THE SR-CL8 CLUSTER BRACKET
- 10.1. Flying System Outline 19
- 10.2. Vertical Flying Installation 19
- 10.3. Horizontal Flying 21

11. SPEAKER STACKING
- 11.1. Stack System Outline 23
- 11.2. Assembling the SR-RF8 Rigging Frame 24
- 11.3. Connecting the Rigging Frame to the Speaker 25
- 11.4. Connections Between Speakers 25
- 11.5. About Stacking 26

12. USING THE SR-SB8 RIGGING SUPPORT BRACKET 27
- 12.1. Level Adjuster Installation 27
- 12.2. Rigging Support Bracket Installation 27
- 12.3. Frequent Attachment and Detachment of the Rigging Support Bracket 28
- 12.4. Adjust the Height With a Level Adjuster to Prevent Unstable Installation 28

13. TILTING THE SPEAKER DOWNWARD 29

14. SPECIFICATIONS
- 14.1. SR-C8L and SR-C8S 30
- 14.2. SR-C15B 30
- 14.3. SR-RF8 31
- 14.4. SR-SB8 31
- 14.5. SR-TP8 31
- 14.6. SR-CL8 31

1. SAFETY PRECAUTIONS

- Be sure to read this safety instructions in this section carefully in prior to use.
- Be sure to follow all the precautionary instructions in this section, which contain important warnings and/or cautions regarding safety.
- After reading, keep this manual handy for future reference.

Safety Symbol and Message Conventions

Safety symbols and messages described below are used in this manual to prevent bodily injury and property damage which could result from mishandling. Before operating your product, read this manual first and understand the safety symbols and messages so you are thoroughly aware of the potential safety hazards.

⚠ **WARNING**	Indicates a potentially hazardous situation which, if mishandled, could result in death or serious personal injury.
⚠ **CAUTION**	Indicates a potentially hazardous situation which, if mishandled, could result in moderate or minor injury, and/or property damage.

⚠ WARNING

When Installing the Unit

- Avoid installing or mounting the unit in unstable locations, such as on a rickety table or a slanted surface. Doing so may result in the unit falling down and causing personal injury and/or property damage.

- Refer all installation work to the dealer from whom the speaker was purchased. Installation for flying requires extensive technical knowledge and experience. The speaker may fall off if incorrectly installed, resulting in possible personal injury.

- Flying precautions.
  Be sure to follow the instructions below. Otherwise, the suspension wires or belts may be off or snap and the speaker may fall off, causing personal injury.
  - · Check to confirm that the suspension wires and belts are strong enough to
  - · The connectors of the suspension wires and belts must be securely linked with those of the speaker.
  - · All parts and components (such as enclosures, metal pieces, and screws) must be free from any deformation, crack, and corrosion.
  - · Be sure to use screws supplied with the optional flying hardware when installing the speaker using such hardware.

- Install the unit only in a location that can structurally support the weight of the unit and the mounting bracket. Doing otherwise may result in the unit falling down and causing personal injury and/or property damage.

- Since the unit is designed for in-door use, do not install it outdoors. If installed outdoors, the aging of parts causes the unit to fall off, resulting in personal injury. Also, when it gets wet with rain, there is a danger of electric shock.

- Owing to the unit's size and weight, be sure that at least two persons are available to install the unit. Failure to do so could result in personal injury.

When Installing the Unit

- Do not use other methods than specified to mount the bracket. Extreme force is applied to the unit and the unit could fall off, possibly resulting in personal injuries.

- Use nuts and bolts that are appropriate for the ceiling's or wall's material and structure. Failure to do so may cause the unit to fall, resulting in material damage and possible personal injury.

- Tighten each nut and bolt securely. Ensure that the bracket has no loose joints after installation to prevent accidents that could result in personal injury.

- Use the specified mounting bracket in combination. Doing otherwise may cause the unit or component to fall off, resulting in personal injury.

- Do not mount the unit in locations exposed to constant vibration. The mounting bracket can be damaged by excessive vibration, potentially causing the unit to fall, which could result in personal injury.

- Do not install the unit in indoor swimming pools or such locations where corrosion may occur easily. The parts deteriorate if corroded, causing the unit to fall, which could result in personal injury.

⚠ CAUTION

When the Unit is in Use

- Do not place heavy objects on the unit as this may cause it to fall or break which may result in personal injury and/or property damage. In addition, the object itself may fall off and cause injury and/or damage.

- Do not operate the unit for an extended period of time with the sound distorting. Doing so may cause the connected speakers to heat, resulting in a fire.

- Do not stand or sit on, nor hang down from the unit as this may cause it to fall down or drop, resulting in personal injury and/or property damage.

- To avoid risks, warn others to stay away from the speaker or not to lean against it. Otherwise people may trip over a Rigging Support Bracket or the speaker may fall down, causing personal injury.

- Have the unit checked periodically by the shop from where it was purchased. Failure to do so may result in corrosion or damage to the speaker or the unit that could cause it to fall, possibly causing personal injury.

2. GENERAL DESCRIPTION

TOA's lineup of line array speakers employs TOA's unique wave front control technology to create a sound field that offers clear reproduction and uniform sound dispersion.
This lineup includes versions offering either 5 degrees or 15 degrees of angled vertical directivity, as well as sub-woofer configured types.
The use of optional support brackets allows the line array speakers to be used in many applications as permanent sound system installations.

3. FEATURES

- TOA's unique wave front control technology creates a uniform sound distribution field with interference-free high frequency output, realizing high-clarity acoustic characteristics and long sound transmission capabilities.

- The SR-C8L is a two-way speaker mounting a high-power 20 cm woofer and two compression drivers, and featuring a 5 degree angle of vertical directivity and 110 degrees of horizontal. It is ideal for long distance applications and can be powered by either one or two amplifiers.

- The SR-C8S is a two-way speaker mounting a high-power 20 cm woofer and two compression drivers, and featuring a 15 degree angle of vertical directivity and 110 degrees of horizontal. It is ideal for shorter distance applications and can be powered by either one or two amplifiers.

- By combining the long-distance SR-8L and short-distance SR-8S, a line array speaker system can be built to support a variety of applications.

- The SR-C15B sub-woofer employs a large-diameter 38 cm woofer with high power handling capabilities, and is designed to be used in conjunction with the SR-C8L or SR-C8S line array speakers.

- The line array speakers are designed to allow easy rear access for maintenance work.

- Overlap angles between individual speakers can be set in 1 degree units between 0 and 5 degrees when constructing the line array speaker, making it possible to flexibly control speaker directivity.

- The line array speaker can be stacked or suspended with the additional use of the SR-RF8 Rigging Frame.

4. INSTALLATION PRECAUTIONS

Since this speaker system is designed exclusively for indoor use, be sure to install it only in locations isolated from weather and temperature extremes.
Also, to prevent equipment malfunctions, do not install the speaker in locations exposed to both high temperatures and high humidity, such as indoor swimming pool facilities.

5. DIMENSIONAL DIAGRAMS

5.1. Speaker Systems

5.1.1. SR-C8L Line array speaker

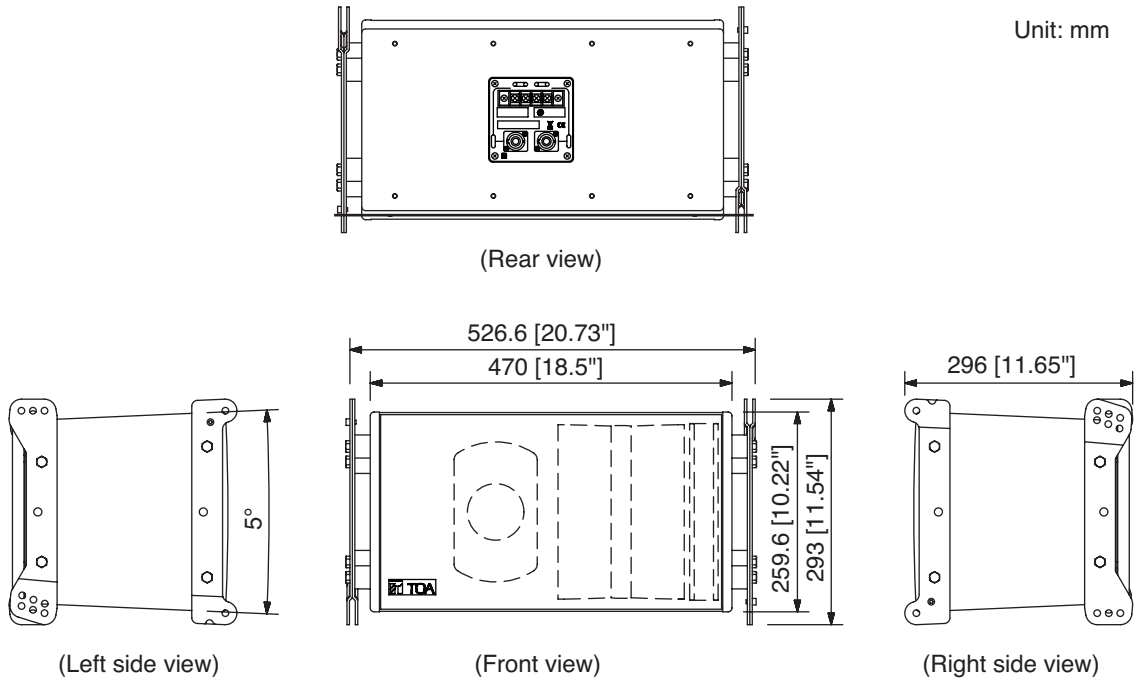

5.1.2. SR-C8S Line array speaker

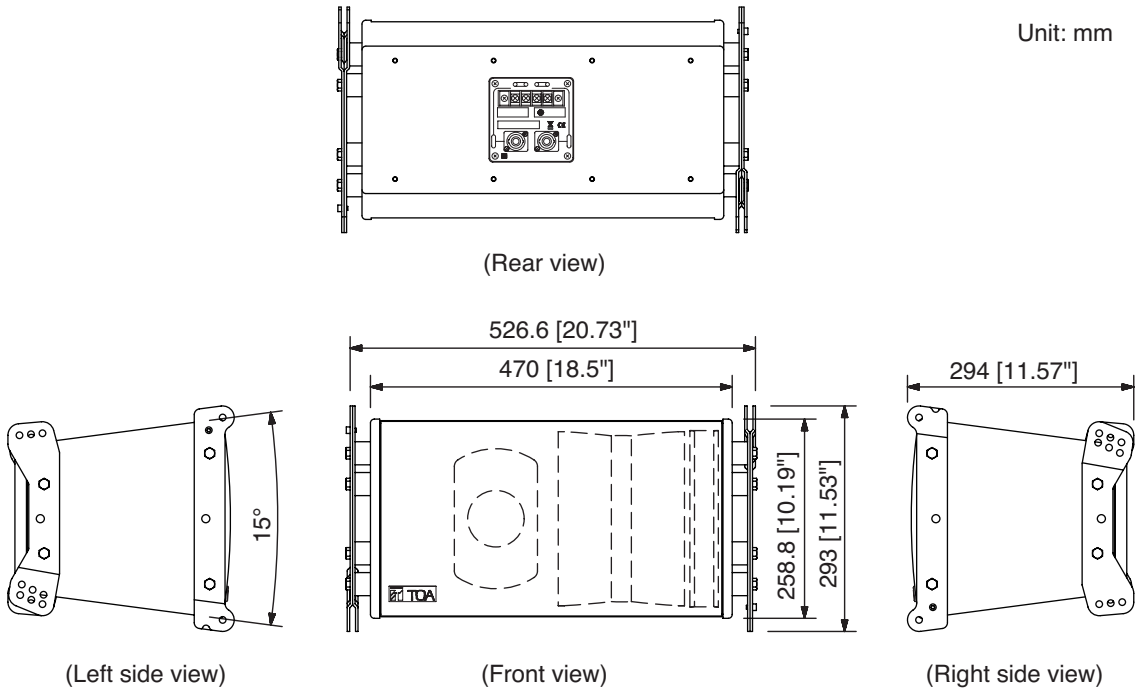

5.2. Sub-Woofer Speaker System

5.2.1. SR-C15B Line array speaker

Unit: mm

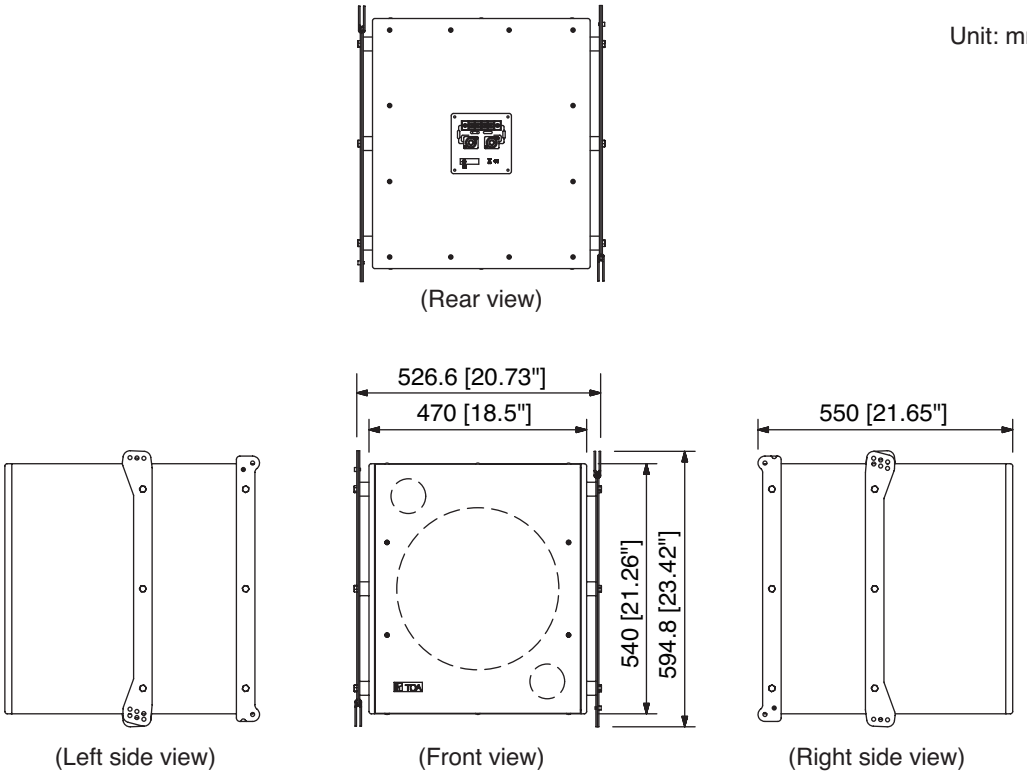

5.3. Frame and Brackets

5.3.1. SR-RF8 Rigging frame

Unit: mm

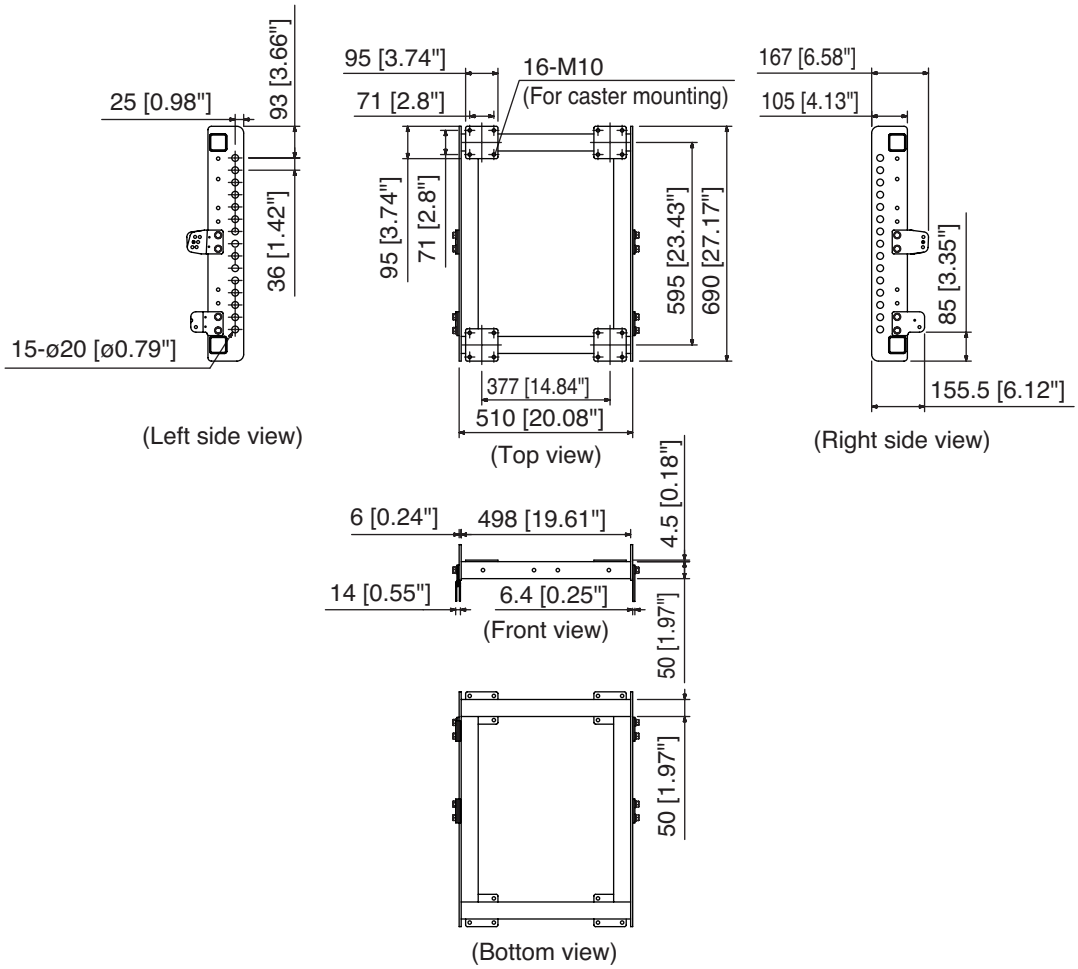

5.3.2 SR-SB8 Rigging support bracket

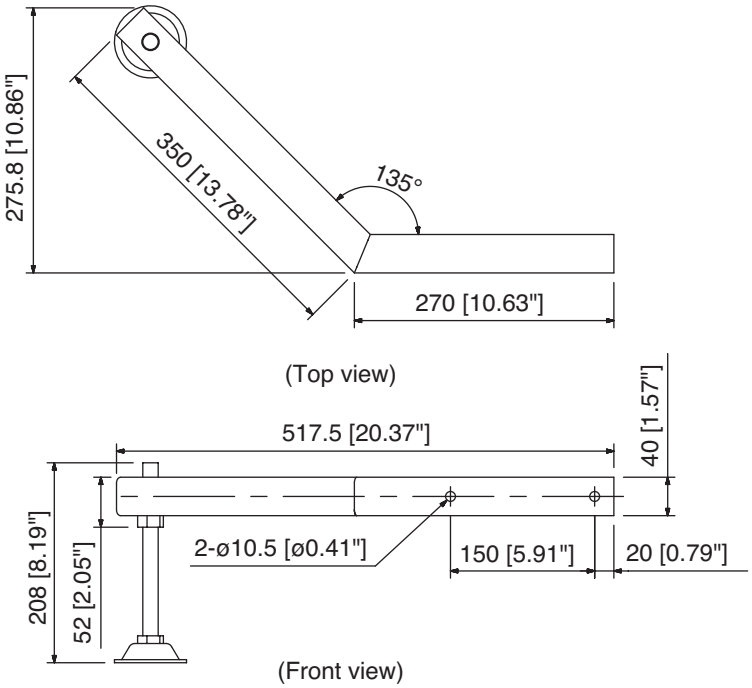

5.3.3. SR-TP8 Tilt joint bracket

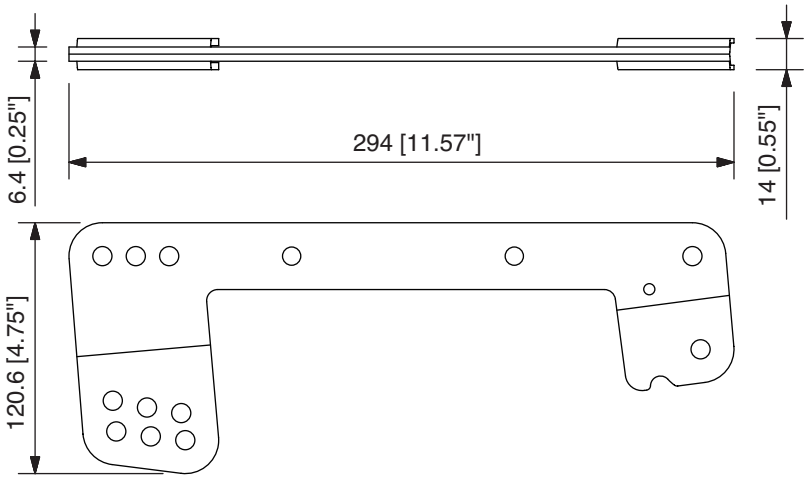

5.3.4 SR-CL8 Cluster bracket

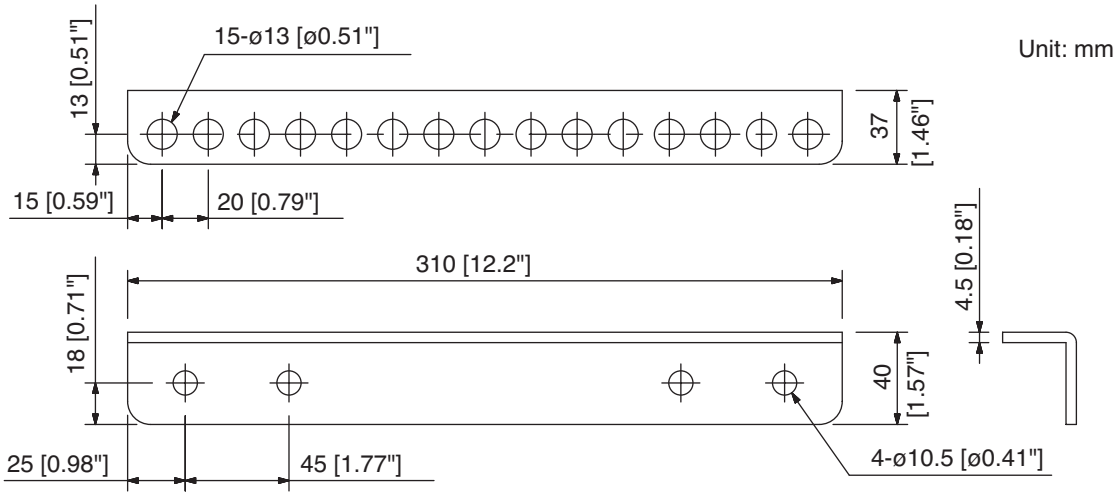

6. BI-AMPLIFIER AND SINGLE-AMPLIFIER OPERATIONS

The SR-C8 series speakers are supplied from the factory set up for bi-amplifier operation. However, this default specification can be switched to single-amplifier operation mode by simply changing the position of an internal connector. (Refer to page 10. "Switching to Single-Amplifier Operation Mode")

6.1. Bi-Amplifier Operation

6.1.1. System diagram

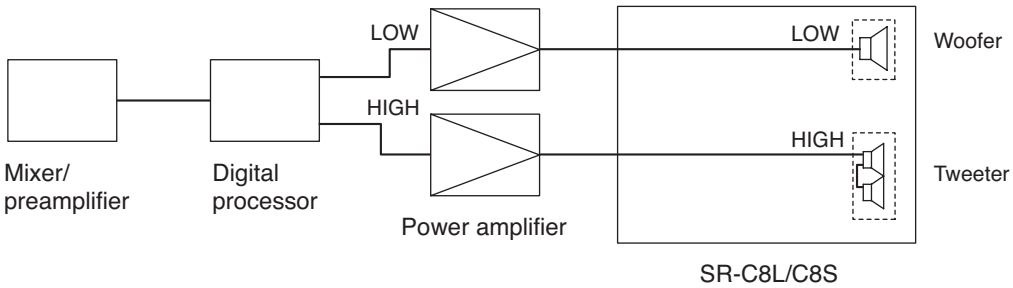

6.1.2. Internal wiring diagram

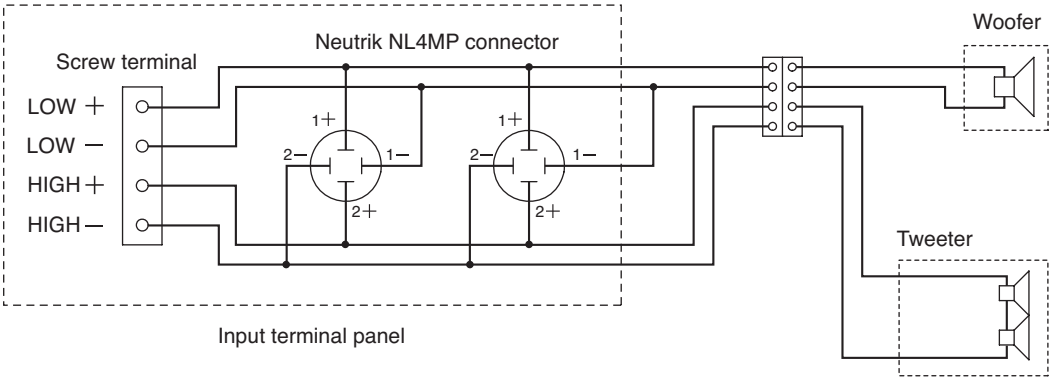

6.2. Single-Amplifier Operation

6.2.1. System diagram

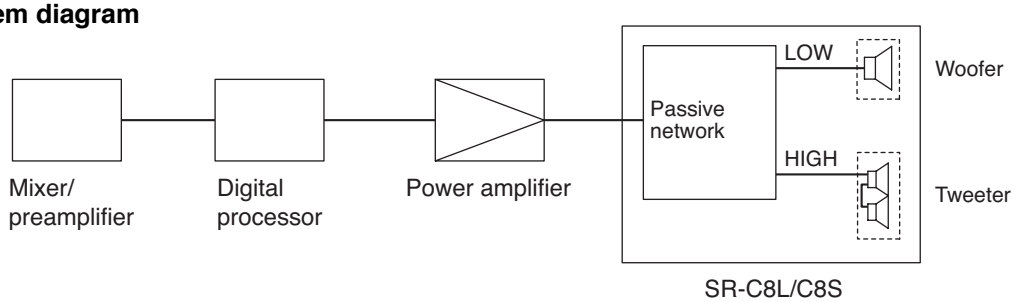

6.2.2. Internal wiring diagram

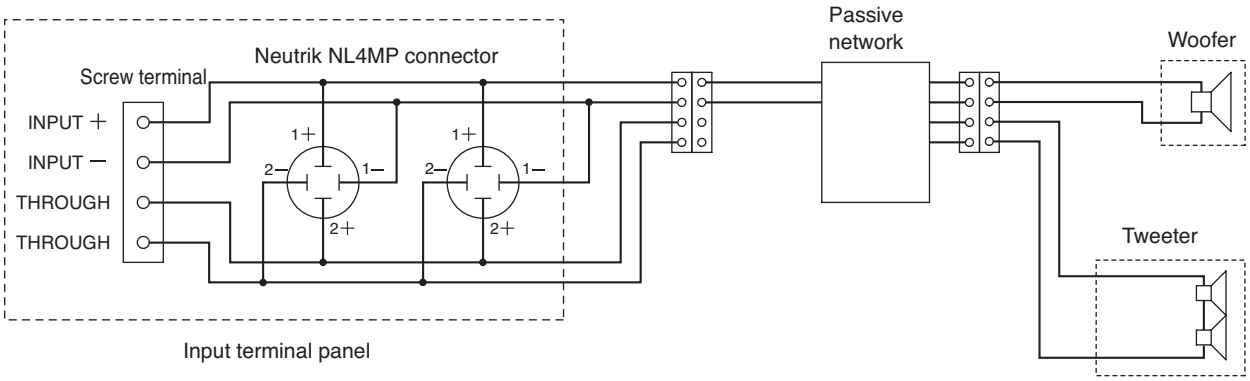

7. SWITCHING TO SINGLE-AMPLIFIER OPERATION MODE

To switch the speaker's bi-amplifier operation mode to single-amplifier operation, remove the speaker's rear input panel and change the speaker's internal wiring.

Switching Power Modes

Step 1. Remove the four screws securing the input terminal panel and pull out the panel.

Step 2. Pull out a short length of the wiring connected to the back side of the input panel.

Step 3. Disconnect and switch the two pairs of connected connectors so that the two marked and unmarked connector halves match up.

Step 4. Reinstall the input terminal panel using the four removed screws.

Step 5. Attach the supplied seals to the input terminal panel to change the indication.

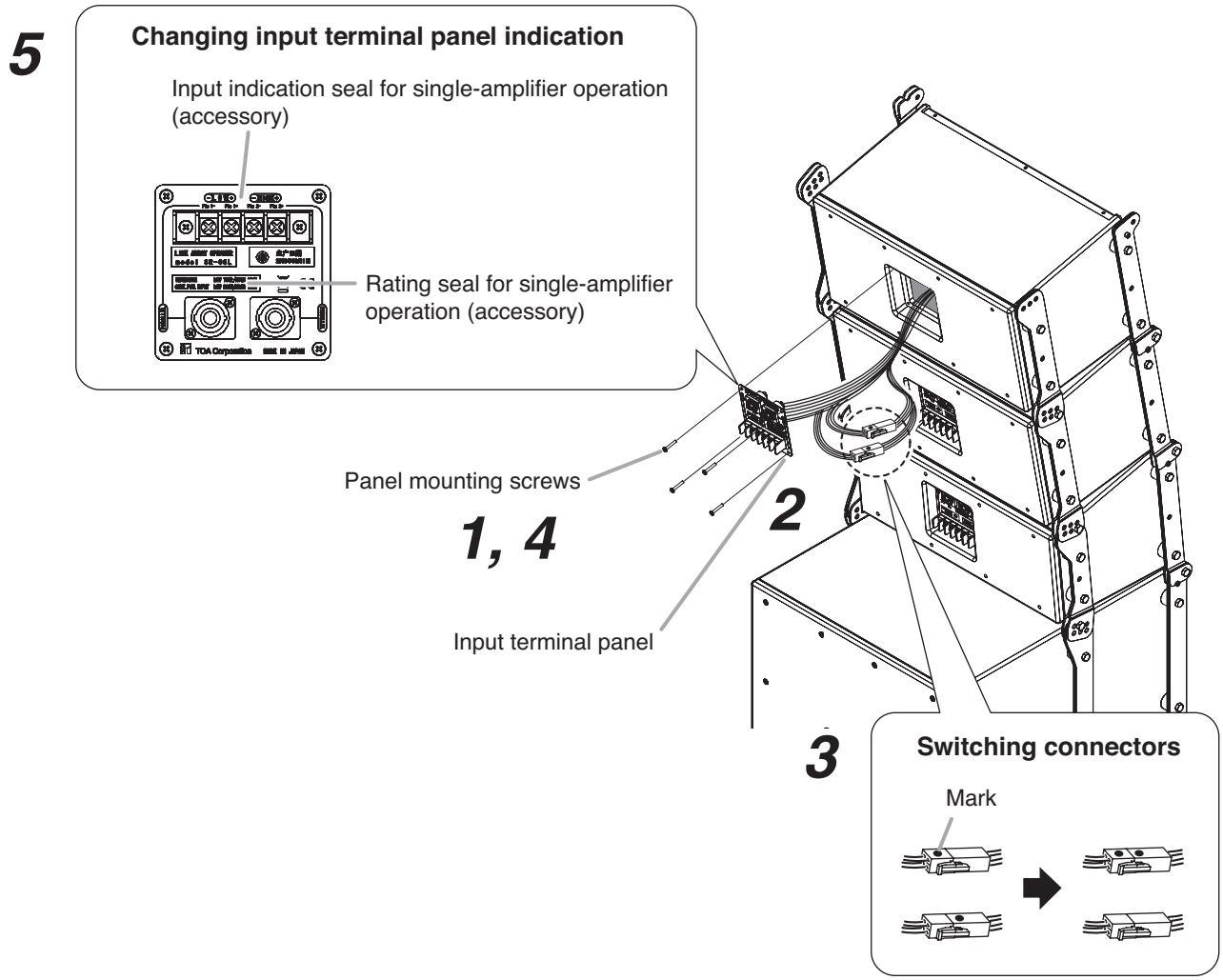

8. DIGITAL PROCESSOR SETTINGS

Set the digital processor's parameters as follows:

8.1. SR-C8L and SR-C8S Systems

8.1.1. Bi-amplifier operation

Channel	Gain (dB)	Polarity	Filter				Delay (msec)
			TYPE	Freq. (Hz)	Gain (dB)	Q	
Pre-stage Filter	−−	−−−	PEQ	1.6k	–4.0	1.414	−−−
SR-C8 LOW	0	Normal (Positive)	LPF (12 dB)	2.0k	−−−	0.707	0.667
			HPF (12 dB)	60	−−−	1.000	
			PEQ	800	–5.0	3.450	
SR-C8 HIGH	–9.0	Normal (Positive)	HPF (12 dB)	2.0k	−−−	0.707	0
			PEQ	1.45k	−6.0	4.318	
			PEQ	2.9k	−10.0	2.997	
			High Shelving	10k	+7.0	−−−	
			All Pass	4.5k	−−−	2.016	
			All Pass	7.6k	−−−	2.016	
			All Pass	11.5k	−−−	2.215	
			All Pass	12.0k	−−−	2.016	
			All Pass	14.0k	−−−	1.512	
			All Pass	17.0k	−−−	4.938	

The “Gain” indications are merely provided as guidelines and may need be adjusted depending on the system configuration.

8.1.2. Single-amplifier operation

Channel	Gain (dB)	Polarity	Filter				Delay (msec)
			TYPE	Freq. (Hz)	Gain (dB)	Q	
SR-C8	0	Normal (Positive)	HPF (12 dB)	60	−−−	1.000	−−−
			PEQ	280	−3.5	4.318	
			PEQ	800	−2.0	3.450	
			PEQ	2.5k	−11.5	1.044	
			PEQ	2.65k	−5.0	2.145	
			PEQ	5.3k	−2.5	1.204	
			PEQ	9.0k	−6.0	1.707	

8.2. Combined SR-C8L or SR-C8S and SR-C15B Systems

8.2.1. Bi-amplifier operation

Channel	Gain (dB)	Polarity	Filter				Delay (msec)
			TYPE	Freq. (Hz)	Gain (dB)	Q	
Pre-stage Filter	−−	−−−	PEQ	1.6k	−4.0	1.414	−−−
SR-C15B	+6.0	Normal (Positive)	HPF (12 dB)	35	−−−	2.053	1.896
			LPF (6 dB)	50	−−−	−−−	
			LPF (12 dB)	100	−−−	1.432	
			PEQ	60	+3.0	2.648	
SR-C8 LOW	0	Normal (Positive)	LPF (12 dB)	2.0k	−−−	0.707	0.667
			HPF (12 dB)	100	−−−	1.000	
			PEQ	800	−5.0	3.450	
SR-C8 HIGH	−9.0	Normal (Positive)	HPF (12 dB)	2.0k	−−−	0.707	0
			PEQ	1.45k	−6.0	4.318	
			PEQ	2.9k	−10.0	2.997	
			High Shelving	10k	+7.0	−−−	
			All Pass	4.5k	−−−	2.016	
			All Pass	7.6k	−−−	2.016	
			All Pass	11.5k	−−−	2.215	
			All Pass	12.0k	−−−	2.016	
			All Pass	14.0k	−−−	1.512	
			All Pass	17.0k	−−−	4.938	

“Gains” are merely given as a guideline and may need be adjusted depending on the system configuration.

8.2.2. Single-amplifier operation

Channel	Gain (dB)	Polarity	Filter				Delay (msec)
			TYPE	Freq. (Hz)	Gain (dB)	Q	
SR-C15B	+6.0	Normal (Positive)	HPF (12 dB)	35	−−−	2.053	1.229
			LPF (6 dB)	50	−−−	−−−	
			LPF (12 dB)	100	−−−	1.432	
			PEQ	60	+3.0	2.648	
SR-C8	0	Normal (Positive)	HPF (12 dB)	100	−−−	1.000	0
			PEQ	280	−3.5	4.318	
			PEQ	800	−2.0	3.450	
			PEQ	2.5k	−11.5	1.044	
			PEQ	2.65k	−5.0	2.145	
			PEQ	5.3k	−2.5	1.204	
			PEQ	9.0k	−6.0	1.707	

The “Gain” indications are merely provided as guidelines and may need be adjusted depending on the system configuration.

9. FLYING SYSTEMS USING THE SR-RF8 RIGGING FRAME

9.1. Flying System Outline

Use the SR-RF8 Rigging Frame for flying applications. Up to twelve line array speakers can be simultaneously connected per frame, however the SR-C15B is calculated as two units.
Adjust the vertical directivity angle according to the installation environment. For applications that specify long-distance sound transmission, link the long-distance SR-C8L speakers together.
Shown below is a basic flying system.

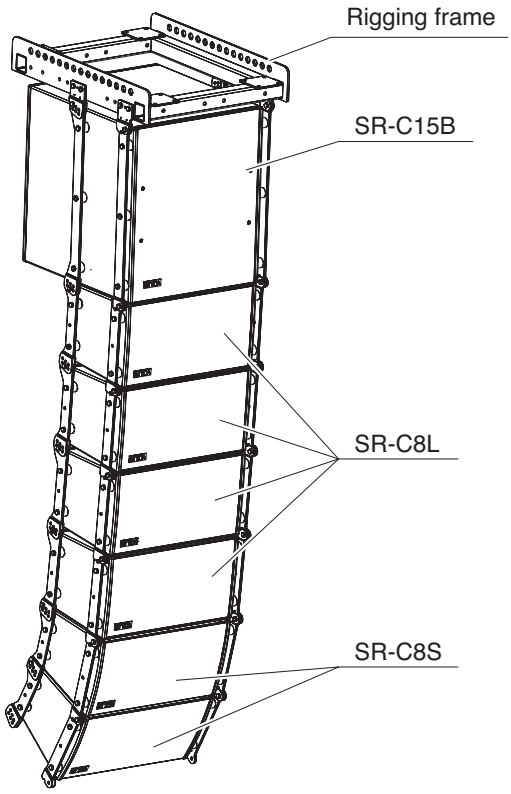

The line array speaker's vertical directivity angle is 5 degrees for the SR-C8L and 15 degrees for the SR-C8S.

[SR-C8L]

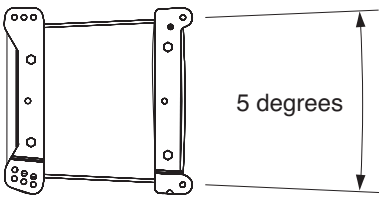

[SR-C8S]

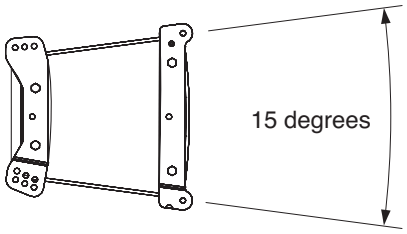

This flying system consists of four SR-C8L units, two SR-C8S units and one SR-C15B unit. To enhance long-distance sound transmission capabilities, the four SR-C8Ls are linked together at overlap angles of four, two and one degree. As a result of this, the system's overall vertical directivity angle is 43 degrees.
Overlap angles can be set depending on how the speakers are linked together.
The horizontal directivity angle is 110 degrees.

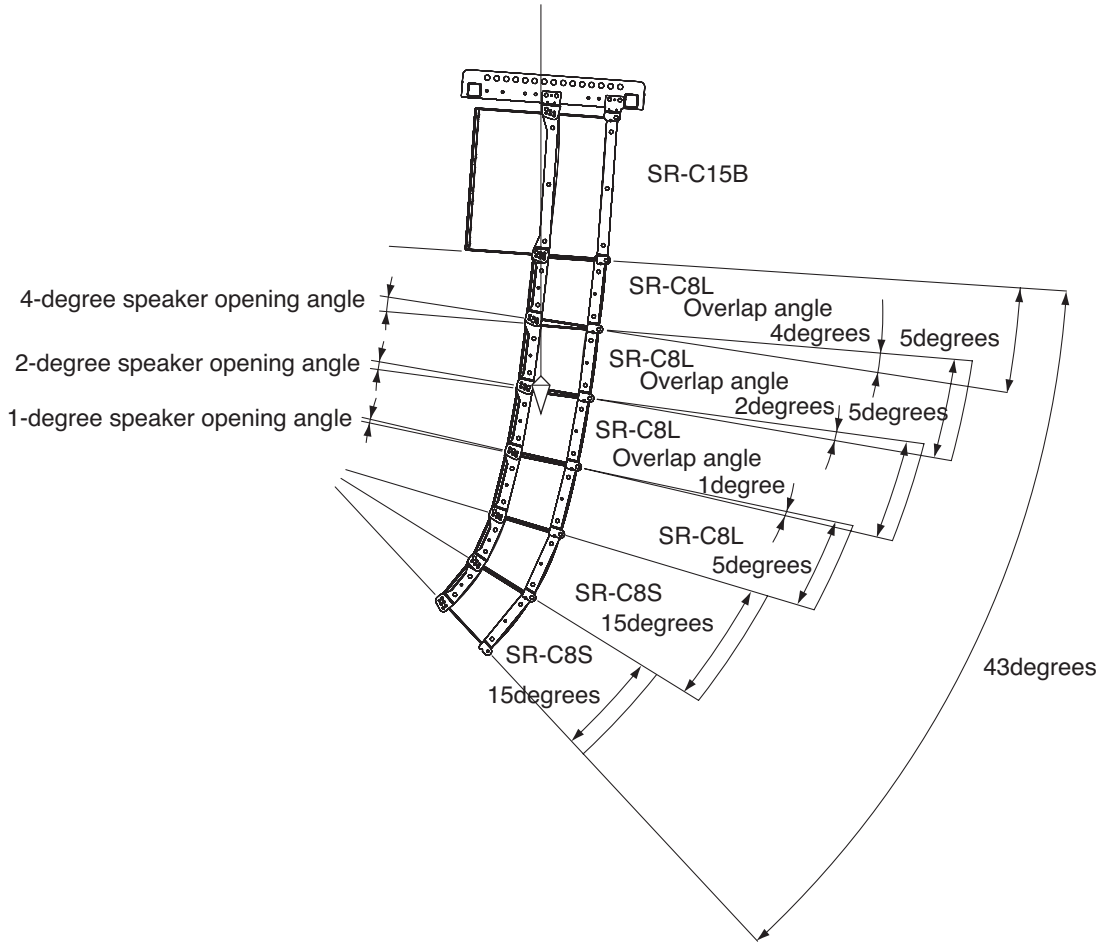

As can be seen from the above figure, the overlap angle is equal to the rear opening angle between speakers.

Example: To adjust the sound radiation overlap angle to five degrees, set the rear opening angle between the speakers to five degrees.
If the speakers are linked flat without no space between them, there will be no sound radiation overlap. For overlap angle settings, refer to "Connection Between Speakers" on page 17.

9.2. Assembling the SR-RF8 Rigging Frame

Assemble the rigging frame referring to the figure below.
Ensure that fixing plates are correctly secured using two bolts (including plain and spring washers) supplied with the rigging frame for each plate.
Since each fixing plate has its own installation position and orientation, refer to the figure for correct assembly.
Be sure that the forward mounting holes are always used in flying applications.

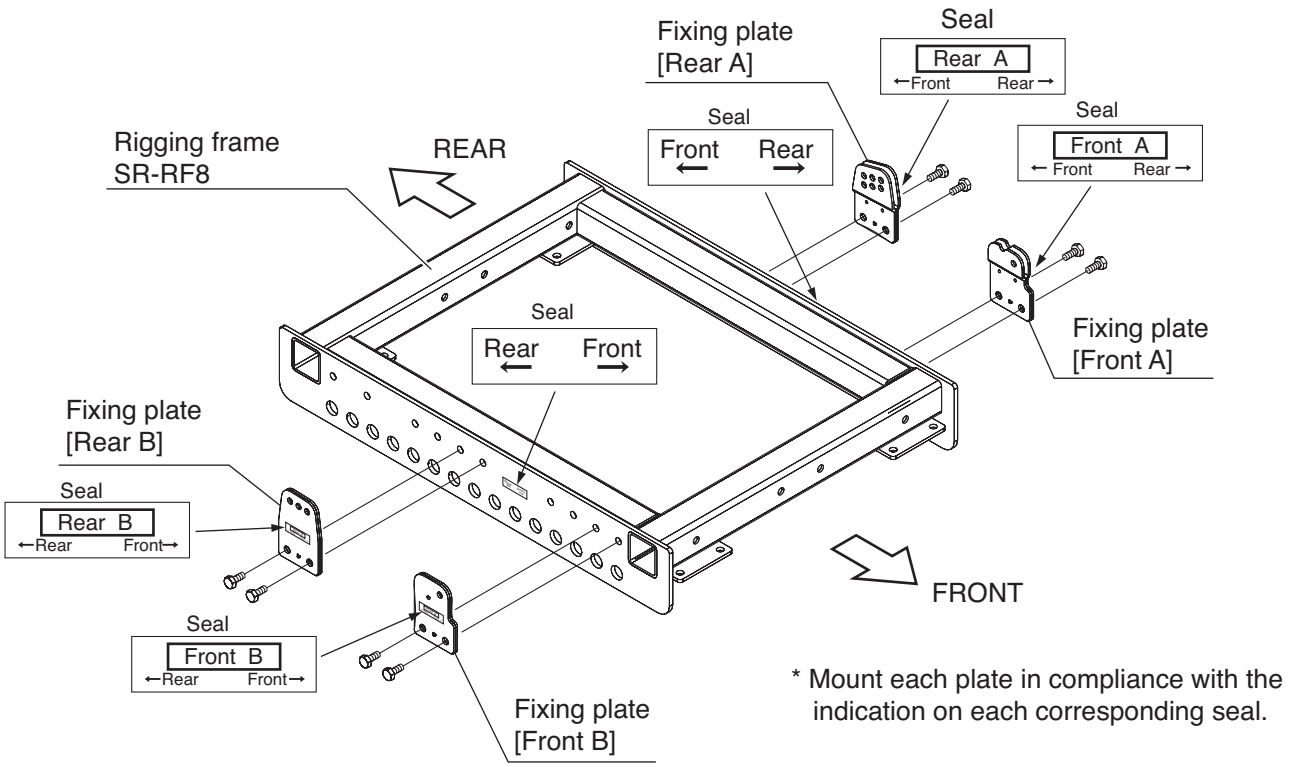

[Assembled frame]

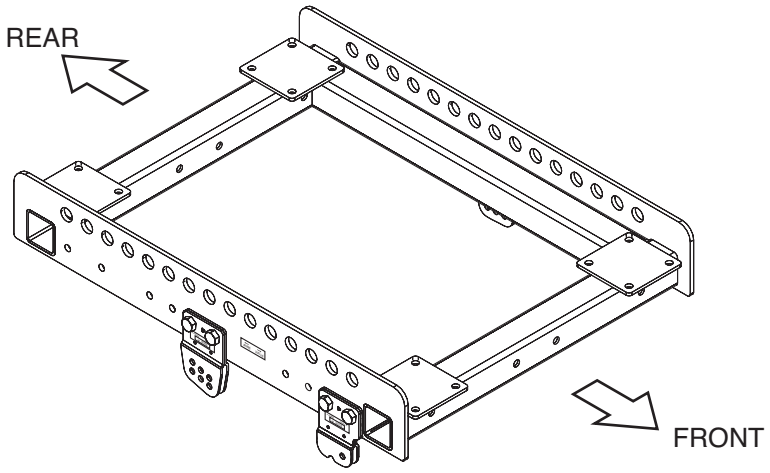

9.3. Connecting the Rigging Frame to the Speaker

Connect the rigging frame to the speaker referring to the figures below.
Confirm the positioning of the horn (SR-C8L and SR-C8S only), then correctly mount the rigging frame to the speaker by tightening the supplied nuts and bolts from both left and right sides.
When suspending the SR-C15B sub-woofer, be sure to mount it in the uppermost position (i.e. immediately below the rigging frame).

[Speaker system assembly]

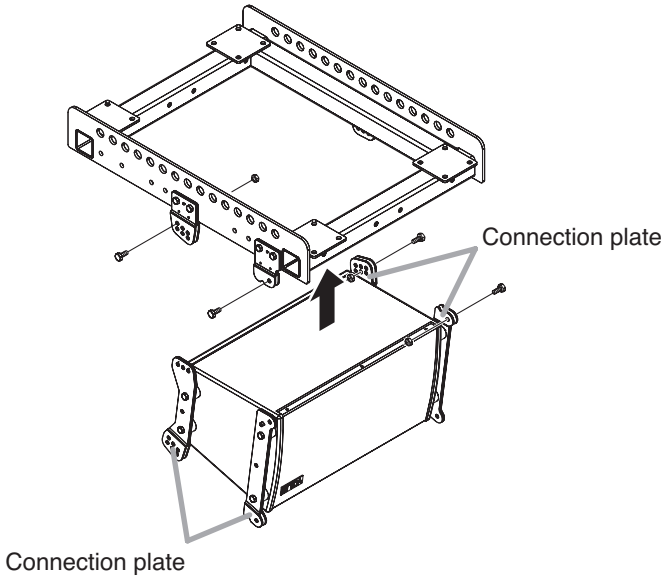

[Sub-woofer system assembly]

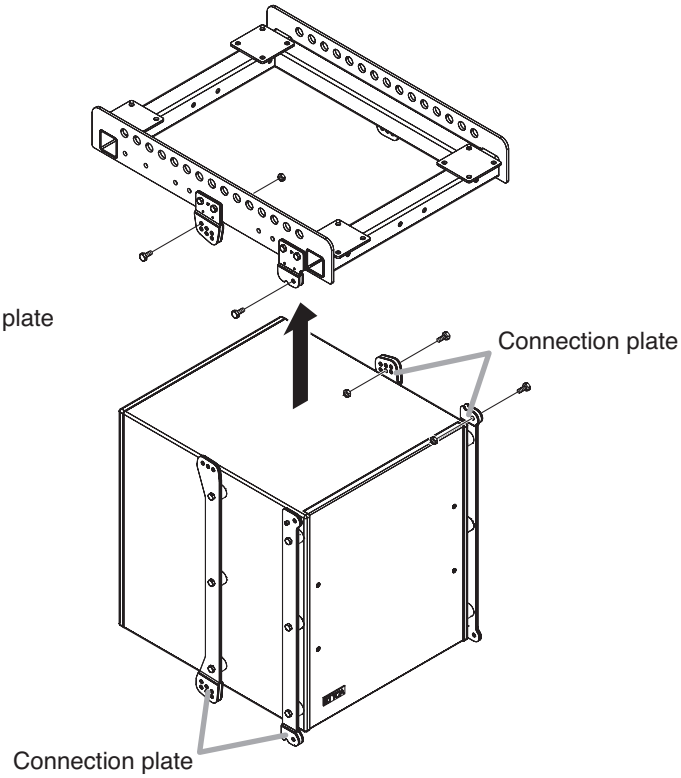

9.4. Connection Between Speakers

Inter-connect speaker sections referring to the figures below.
Ensure that both speakers are securely connected by tightening the supplied nuts and bolts from both left and right sides.
Since connection holes for setting the overlap angle are provided at the back of the speaker, assemble using the connection holes matching the required overlap angle. The overlap angle can be set within the range of 0 to 5 degrees in 1 degree units.

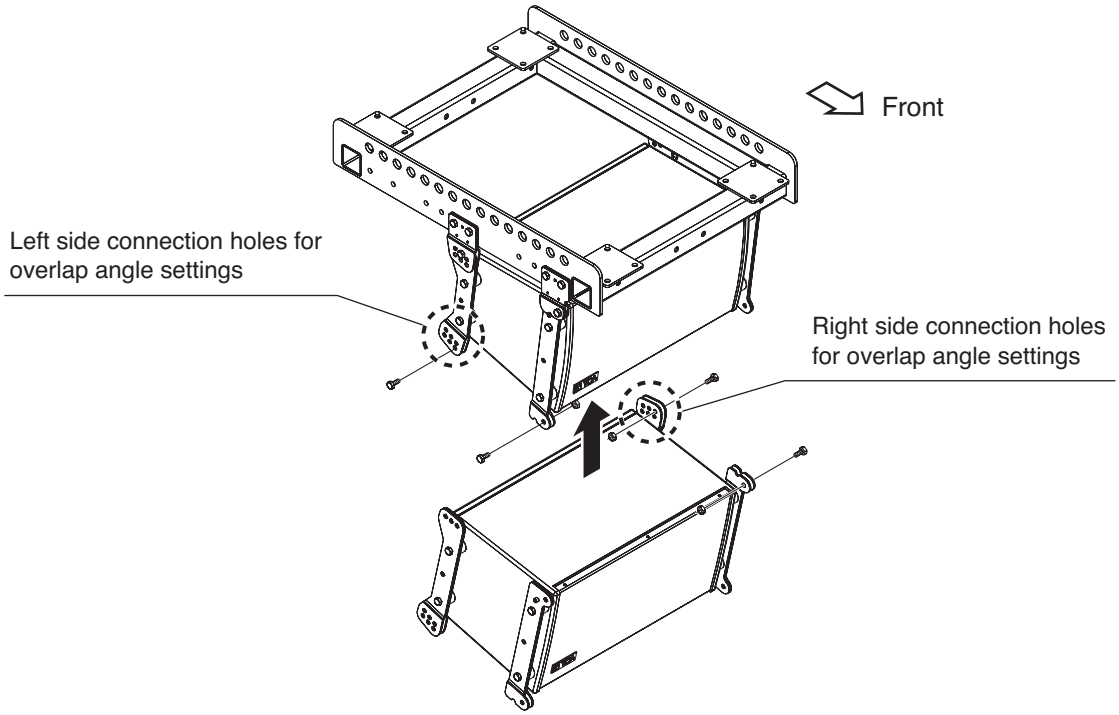

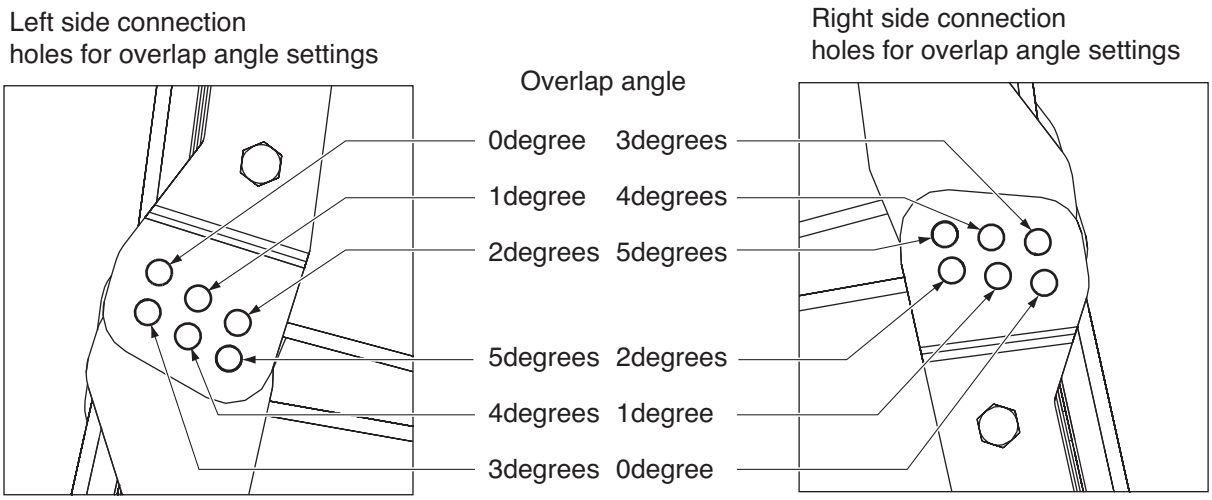

9.5. About the Flying Installations

Cautions

- Suspension wires and shackles are not supplied with the speaker. Separately prepare and use those which are strong enough to suspend the speaker system. Further, ensure that the ceiling structure from which the speaker system is suspended is also robust and capable of supporting the system's total weight.
- A total of up to 12 line array speakers can be connected per rigging frame. However, the SR-C15B is calculated as two units. No more than a total of 12 units can be connected.

- Use at least two points on both the left and right sides to suspend the system vertically.

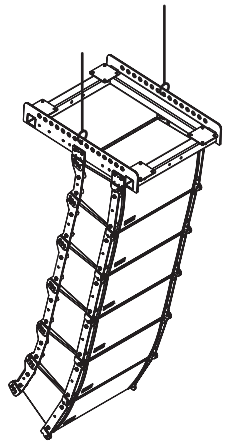

- Use the suspension points that allow the system to be set for a desired downward angle. The downward angle increases as the suspension points are moved rearward.

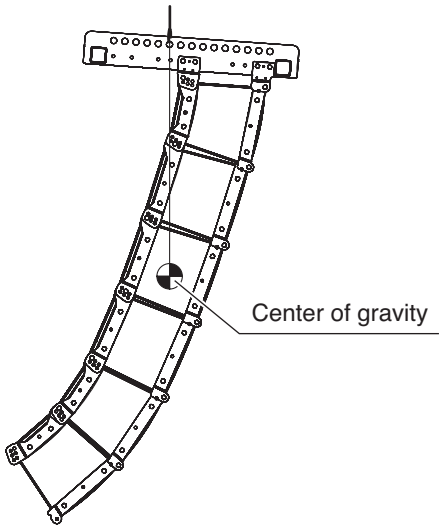

- Add an anti-swing guy wire as required. However, take care that the speaker system's weight is not applied to the wire.

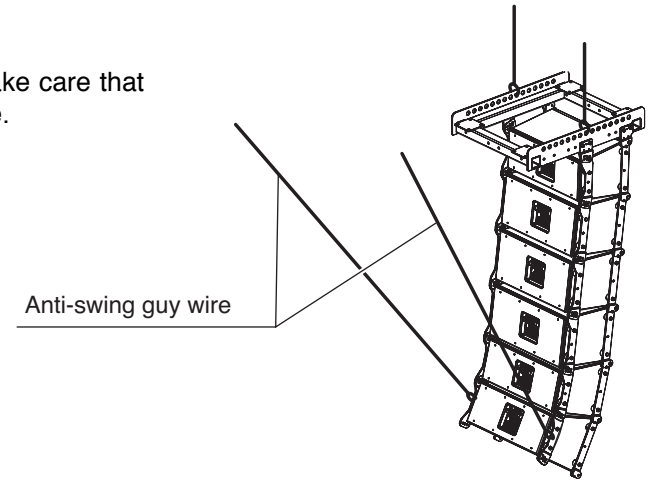

10. INSTALLING THE FLYING SYSTEM USING THE SR-CL8 CLUSTER BRACKET

10.1. Flying System Outline

This flying system uses the SR-CL8 Cluster Bracket. Using the cluster bracket, up to four speakers can be connected to each other when suspending in vertical or horizontal orientation. Note that the sub-woofer cannot be installed using the cluster bracket.

10.2. Vertical Flying Installation

10.2.1. Cluster bracket attachment

Attach the cluster brackets to the speaker referring to the figure below. Ensure that they are securely attached with the supplied nuts and bolts (including plain and spring washers).

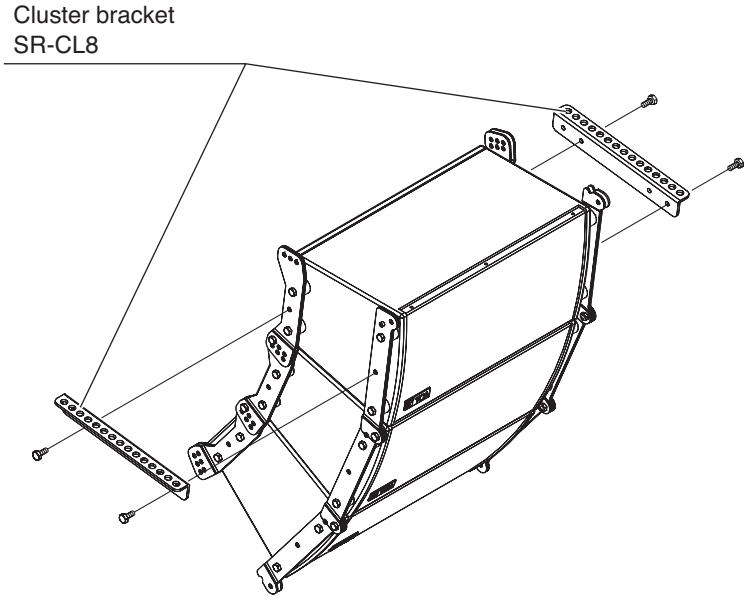

10.2.2. Vertical flying installation

Cautions

- Wires and shackles to be used for suspension are not supplied with the speaker. Separately prepare and use those which are strong enough to suspend the speaker system. Further, ensure that the ceiling structure from which the speaker system is suspended is also robust and capable of standing the system's total weight.
- A total of up to four line array speakers can be connected to each other when using this cluster bracket for suspension.

- Use two points on both the left and right sides to suspend the system vertically.

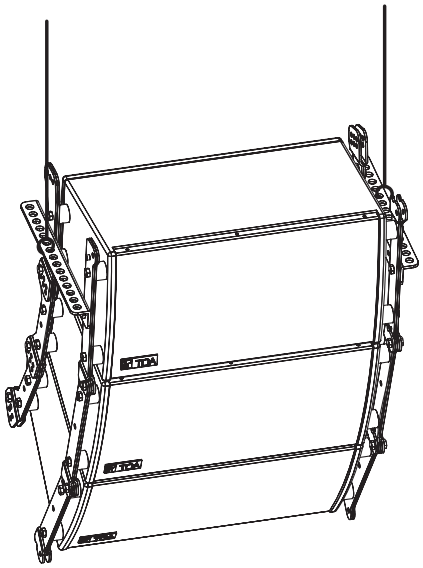

- Use the suspension points that allow the system to be set for a desired downward angle. The downward angle increases as the suspension points are moved rearward.

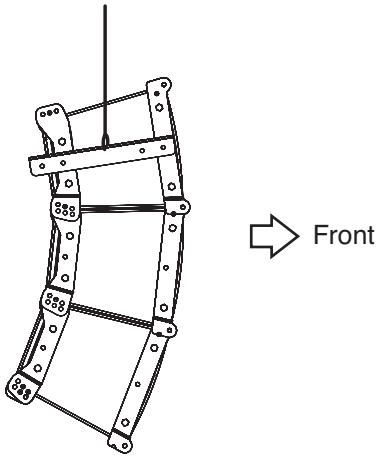

Suspension using the forward suspension points

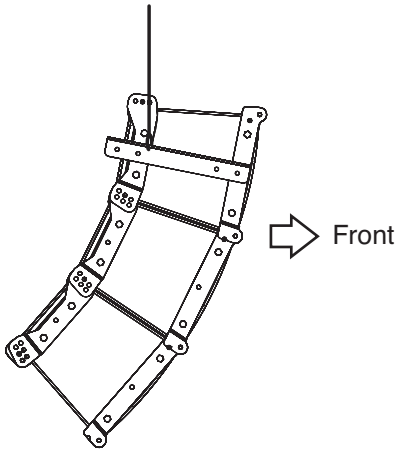

Suspension using the rearward suspension points

- Add an anti-swing guy wire as required. However, take care that the speaker's weight is not applied to the wire.

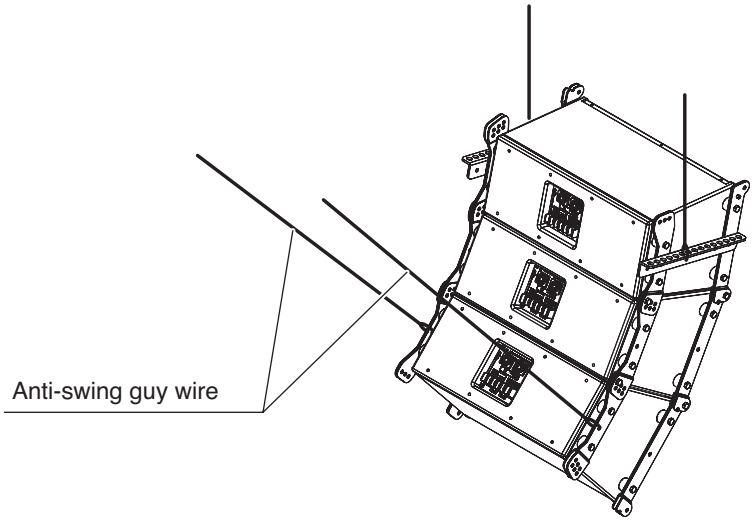

10.3. Horizontal Flying

10.3.1. Cluster bracket attachment

Attach the cluster brackets to the leftmost and rightmost of the connected speakers referring to the figure below. Ensure that they are securely attached with the supplied nuts and bolts (including plain and spring washers).

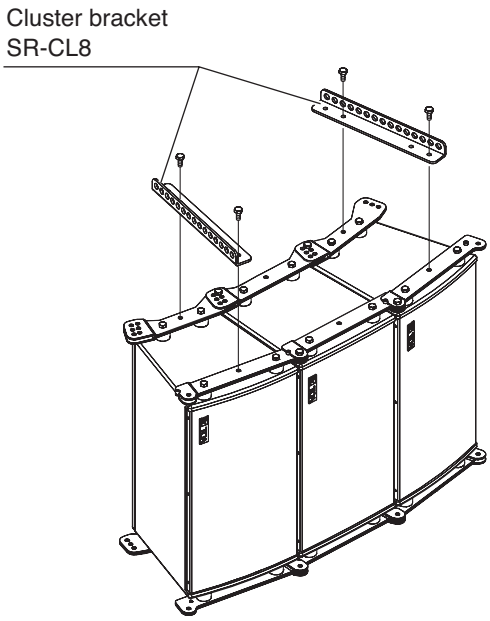

10.3.2. Horizontal Flying Installation

Cautions

- Wires and shackles to be used for suspension are not supplied with the speaker. Separately prepare and use those which are strong enough to suspend the speaker system. Further, ensure that the ceiling structure from which the speaker system is suspended is also robust and capable of standing the system's total weight.
- A total of up to four line array speakers can be connected to each other when using this cluster bracket for suspension.

- Use at least two left and right points to suspend the system vertically.

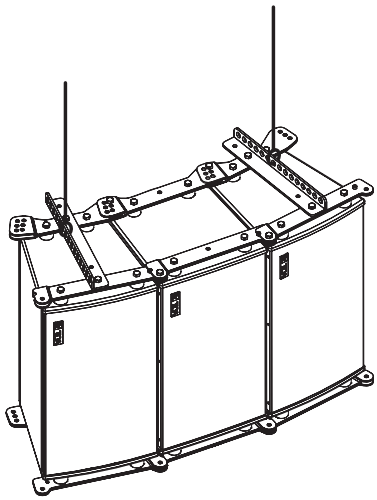

- Use the suspension points that allow the system to be set for a desired downward angle. The downward angle increases as the suspension points are moved rearward.

- Add an anti-swing guy wire as required. However, take care that the speaker system's weight is not applied to the wire.

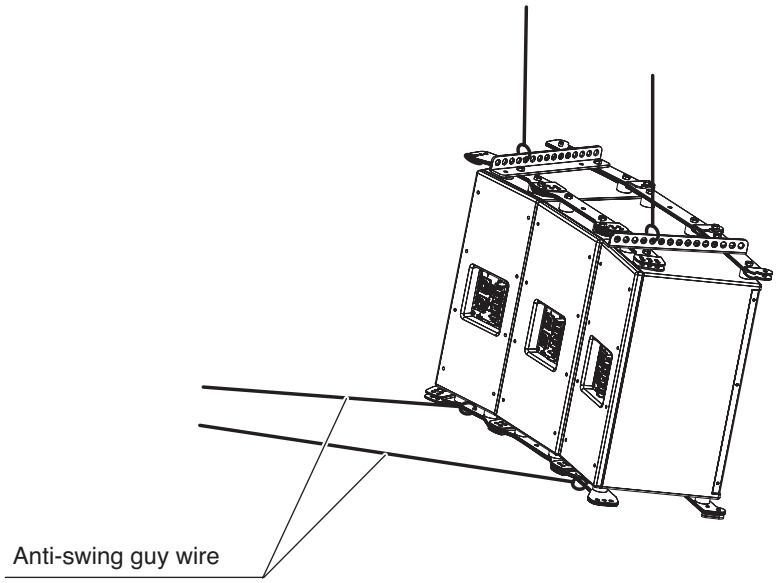

11. SPEAKER STACKING

11.1. Stack System Outline

It is possible to stack the line array speakers using the SR-RF8 Rigging Frame. Up to eight speakers can be stacked, noting that each line array speaker is calculated as 1 unit and each SR-C15B sub-woofer as 2 units. Shown below is a basic stack system. Note that casters must be prepared separately.

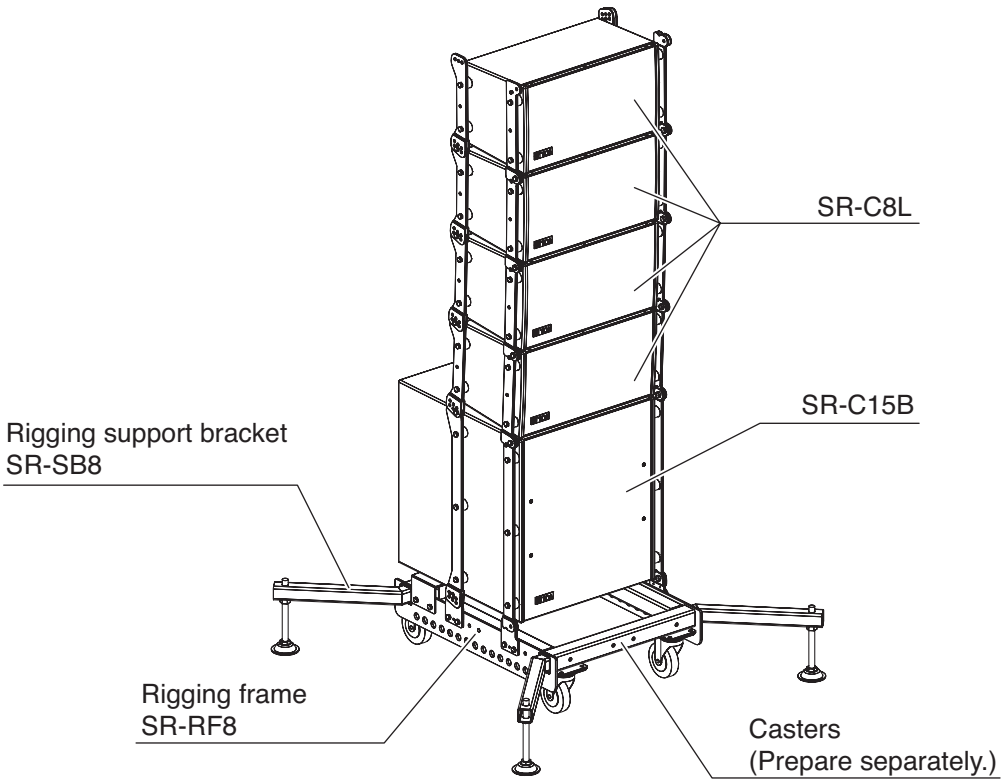

Mount casters of the following specifications, which function as the feet of the rigging frame. Prepare the casters and caster mounting bolts separately.

[Caster Specifications]

Diameter:	Over 100 mm
Mounting pitch:	71 mm x 71 mm
Mounting bolt (diameter):	M10
Mounting plate dimensions:	95 mm x 95 mm
Load-bearing capacity:	Over 50% x total weight (rigging frame weight + speaker weight) per caster

Must be equipped with a stopper.

Recommended model:	K52S-100 made by Takigen

11.2. Assembling the SR-RF8 Rigging Frame

Before assembly, first determine whether to set the mounting position of the fixing plate at the center or forward, taking the stack system's center of gravity into consideration.
Ensure that fixing plates are correctly secured using two bolts (including plain and spring washers) supplied with the rigging frame for each plate.
Since each fixing plate has its own installation position and orientation, assemble it referring to the figure.

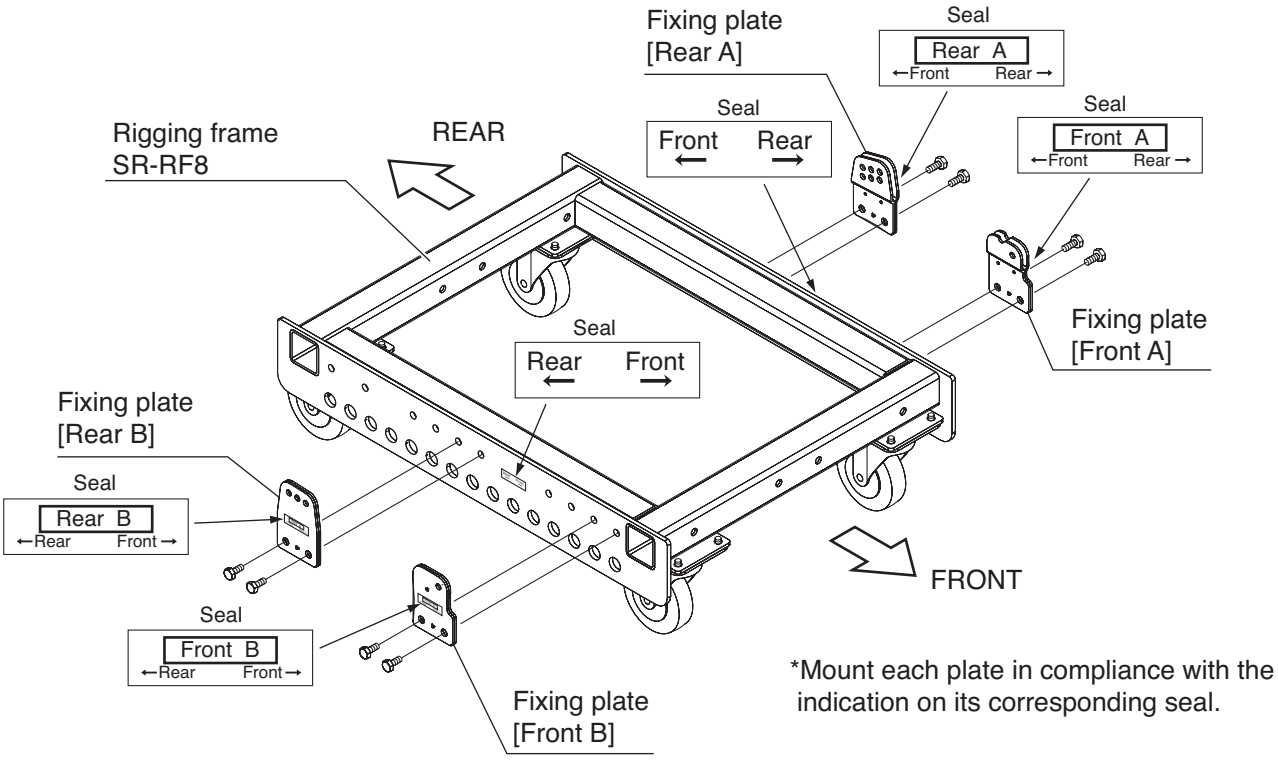

When attaching the fixing plate at the center

Attach at the center when the center of gravity is shifted forward.

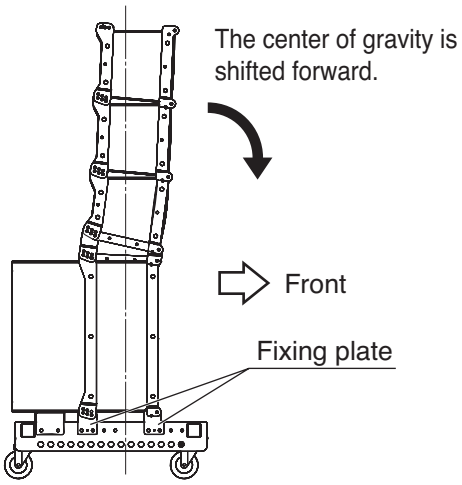

When attaching the fixing plate forward

Attach forward when the center of gravity is shifted backward

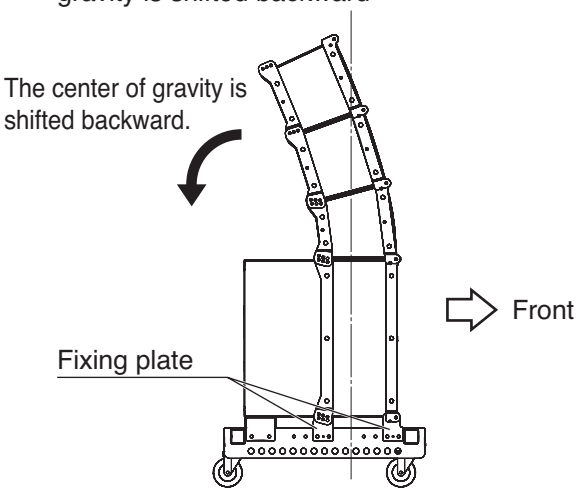

11.3. Connecting the Rigging Frame to the Speaker

Connect the rigging frame to the speaker referring to the following figure.
Correctly connect both units by tightening the supplied nuts and bolts from both the left and right sides.
When using the SR-C15B sub-woofer in the stack system, mount it in the lowermost position (i.e. immediately above the rigging frame). In this configuration, attach the sub-woofer receptacle pieces to the rigging frame, as shown in the figure.

Speaker system assembly **Sub-woofer system assembly**

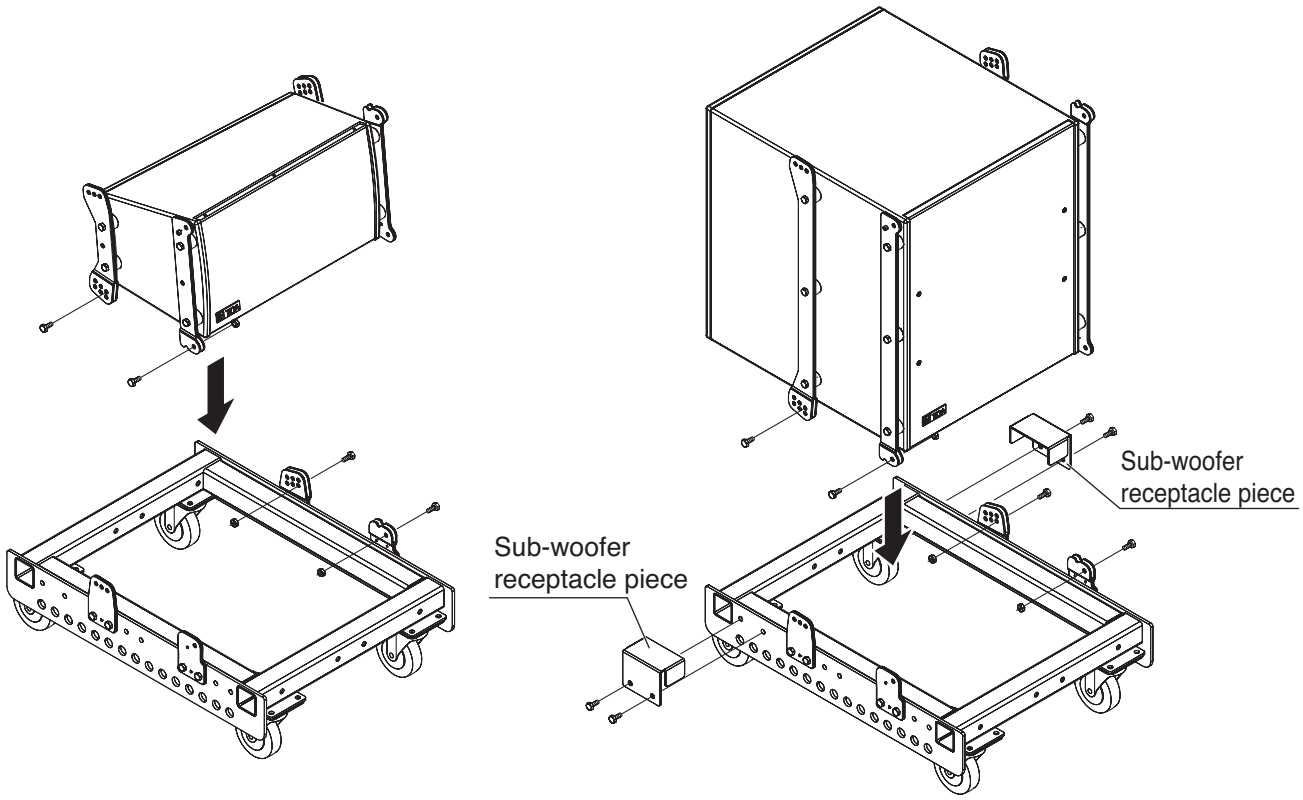

11.4. Connections Between Speakers

Refer to page 17; "Connection Between Speakers" of the chapter "Flying Systems Using the SR-RF8 Rigging Frame."

11.5. About Stacking

- Separately prepare casters and mounting hardware, which function as the rigging frame's feet.
- When stacked, the overhang of the front or rear portion of the line array speaker cannot extend more than 10 cm beyond the edge of the rigging frame.

Notes

- Up to 8 Line Array Speakers can be stacked. The SR-C15B Sub-woofer is counted as 2 units. No more 8 speakers can be stacked.
- When stacking 6 or more speakers, be sure to use the SR-SB8 Rigging Support Bracket to prevent the stacked speakers from tipping over. The SR-C15B Sub-woofer is counted as 2 units.

[Stacking Examples]

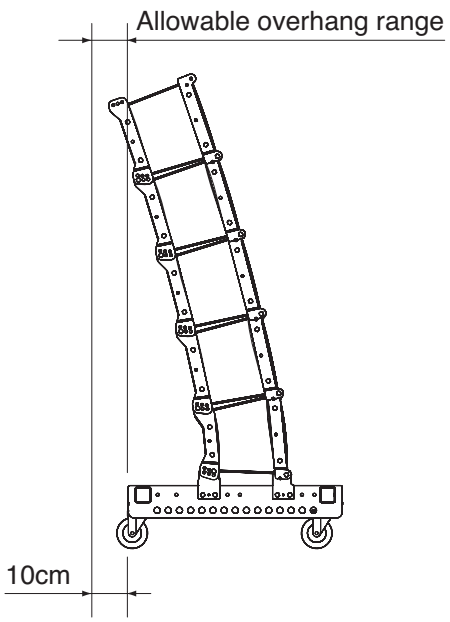

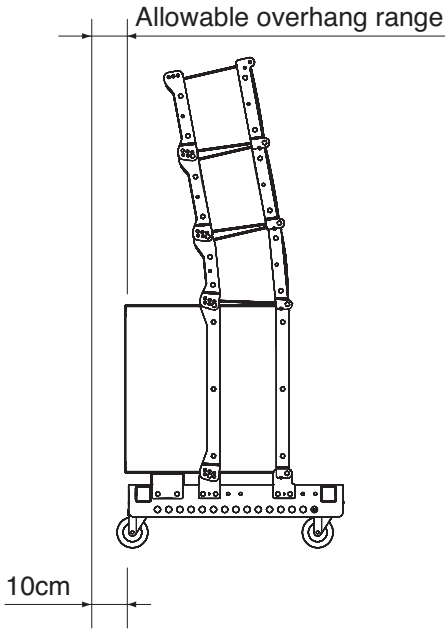

[Prohibited Stacking Example]

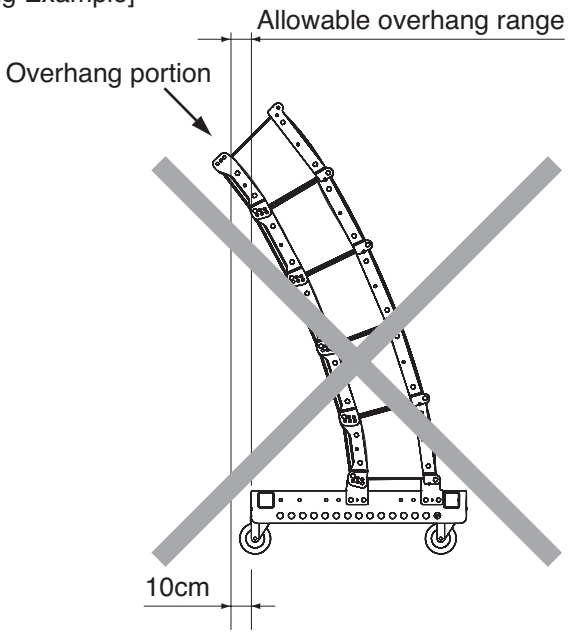

12. USING THE SR-SB8 RIGGING SUPPORT BRACKET

The SR-SB8 Rigging Support Bracket is used to prevent the stacked SR-C8 series line array speakers from tipping over. Be sure the SR-SB8 is used whenever six or more SR-C8 series speakers are stacked.
Count the SR-C15B sub-woofer as two units when configuring a system.

12.1. Level Adjuster Installation

Mount a level adjuster on each rigging support bracket, referring to the following figure.
Turn each level adjuster to adjust the rigging frame height so that the tip of the adjuster projects about 30 mm above the support bracket.

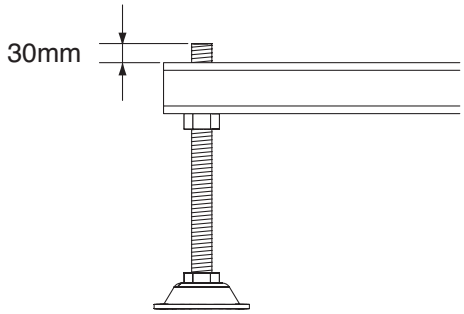

12.2. Rigging Support Bracket Installation

Mount the rigging support bracket to the rigging frame, as shown in the figure below. Ensure that all support brackets are securely mounted using the supplied nuts and bolts.

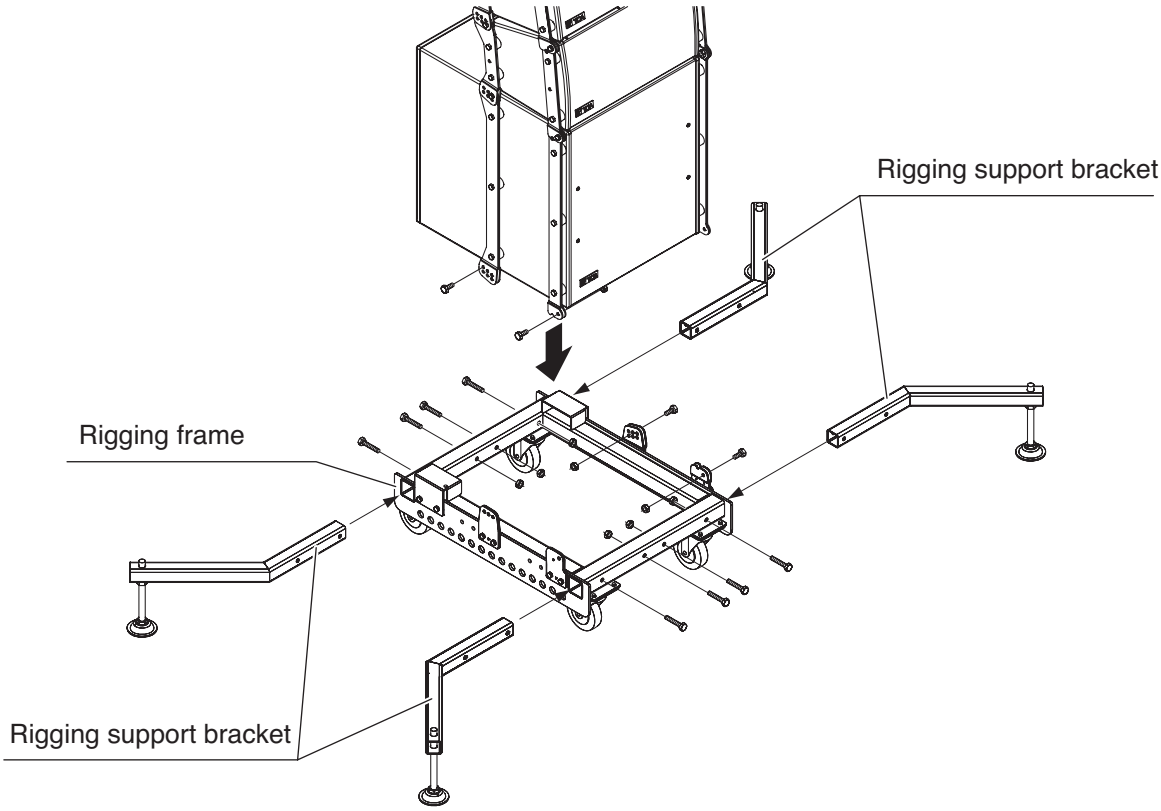

Step 1. Insert the support bracket into the rigging frame.

Step 2. Secure the support bracket using the supplied bolts.

12.3. Frequent Attachment and Detachment of the Rigging Support Bracket

Quick release pins are convenient way of quickly attaching and detaching the rigging support bracket.

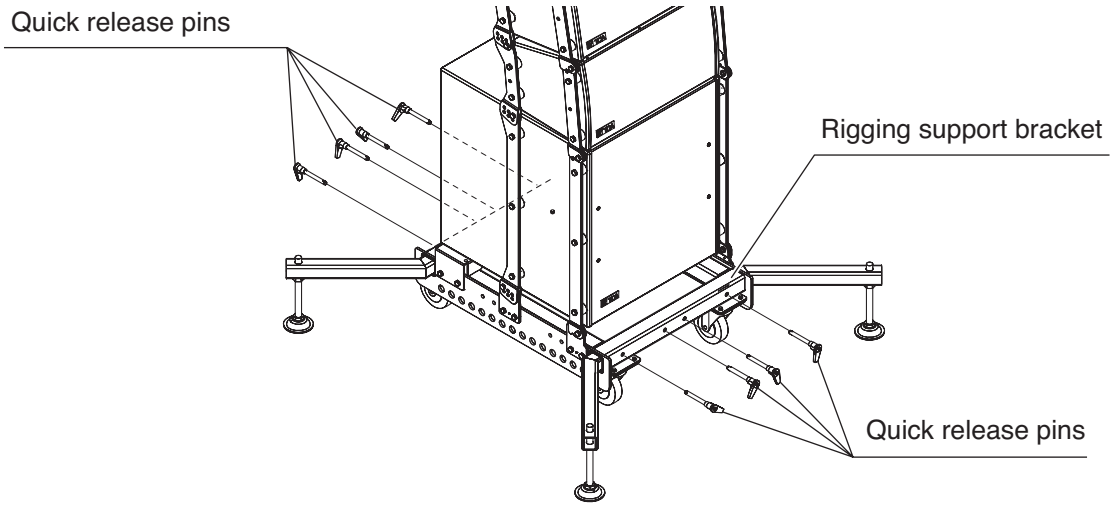

Notes

- Quick release pins are not supplied with the speaker.
- Prepare quick release pins with a diameter of 3/8 inch (10 mm) and length of 2.5 inches (65 mm) as required.

12.4. Adjust the Height With a Level Adjuster to Prevent Unstable Installation

After the speaker installation location has been determined, adjust the level adjusters until it is confirmed that the rigging frame is free from any instability. Since the existence of instability could cause the speaker system to fall down, secure the adjusters correctly.

Notes

- To avoid risks, warn others to stay away from the speaker or not to lean against it.
- Up to eight line array speakers can be stacked together. However, one SR-C15B sub-woofer is counted as two units. No more than eight units can be stacked together.

13. TILTING THE SPEAKER DOWNWARD

The line array speaker (except the sub-woofer) mounted in the lowermost position can also be tilted another 5 to 15 degrees with the use of the optional SR-TP8 Tilt Joint Bracket. Attach the bracket, as shown in the figure below.

[Attachment to the rigging frame]

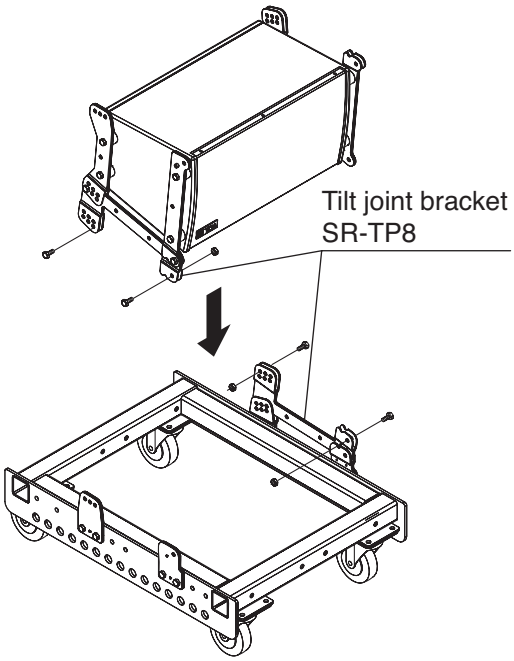

[Attachment to the sub-woofer]

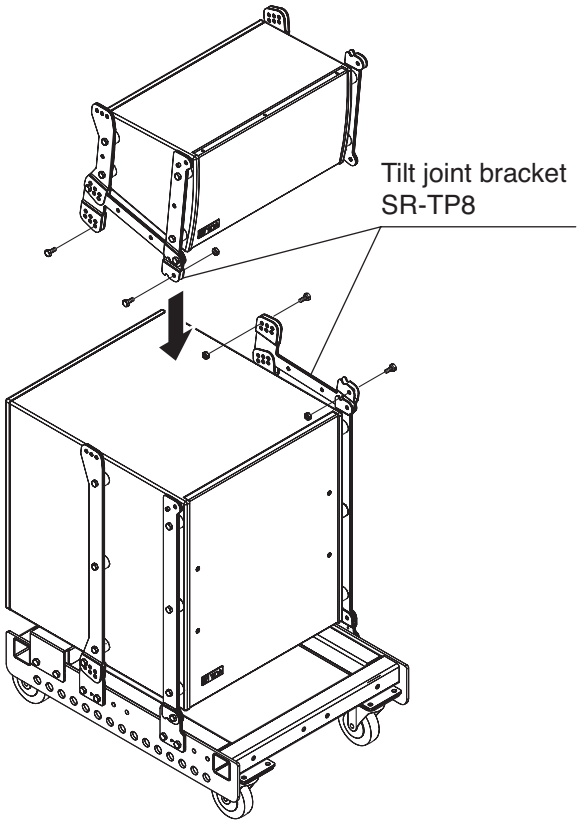

Representative stacking example using the tilt joint bracket

[SR-C15B x 1, SR-C8S x 1, SR-C8L x 3]

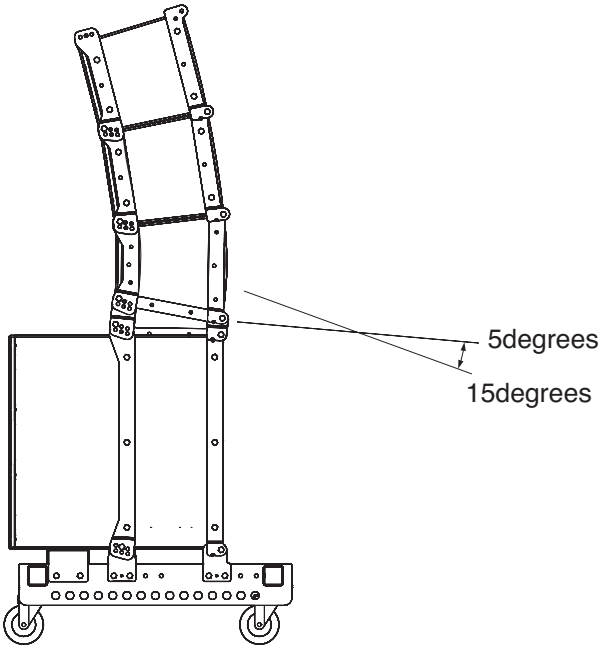

[SR-C8S x 1, SR-C8L x 4]

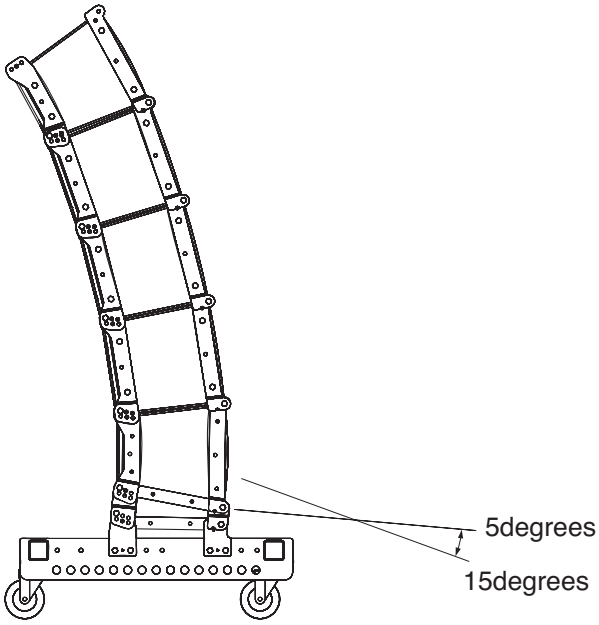

Note
Avoid using the tilt joint bracket for connections between the line array speakers (except the sub-woofer) or between the sub-woofer and the rigging frame, as well as in flying applications.

14. SPECIFICATIONS

14.1. SR-C8L and SR-C8S

Model No.	SR-C8L	SR-C8S
Enclosure	Bass-reflex type	
Allowable Input	Continuous program: 360 W (single-amplifier operation) Low frequency: 360 W, high frequency: 180 W (bi-amplifier operation)	
Rated Impedance	16 Ω (single-amplifier operation) Low frequency: 16 Ω, high frequency: 16 Ω (bi-amplifier operation)	
Output Sound Pressure Level	98 dB (1 W , 1 m) (single-amplifier operation) Low frequency: 95 dB (1 W, 1 m), high frequency: 110 dB (1 W, 1 m) (bi-amplifier operation)	
Frequency Response	65 — 20,000 Hz (when an optional DP-0206 digital processor is used)	
Crossover Frequency	1,600 Hz (when the optional DP-0206 digital processor is used)	
Directivity Angle	Horizontal: 110°, Vertical: 5°	Horizontal: 110°, Vertical: 15°
Internal Speaker	Low frequency: 20 cm cone type High frequency: Wave-front control horn 110°(horizontal) x 5°(vertical) + Compression drivers x 2	Low frequency: 20 cm cone type High frequency: Wave-front control horn 110°(horizontal) x 15°(vertical) + Compression drivers x 2
Input Terminal	M5 screw terminal, distance between barriers: 12.2 mm, Neutrik NL4MP connectors x 2	
Finish	Enclosure: Plywood, black, urethane paint Mesh grille: Rolled steel plate, black, paint	
Dimensions	526.6 (w) x 293 (h) x 296 (d) mm	526.6 (w) x 293 (h) x 294 (d) mm
Weight	17 kg	16 kg
Accessories	M8 connection bolts 4	
Optional Components	Cluster bracket: SR-CL8 Rigging frame: SR-RF8 Tilt joint bracket: SR-TP8 Digital processor: DP-0206	

Note: The design and specifications are subject to change without notice for improvement.

14.2. SR-C15B

Enclosure	Bass-reflex type
Allowable Input	Continuous program: 450 W
Rated Impedance	8 Ω
Output Sound Pressure Level	93 dB (1 W, 1 m)
Frequency Response	40 to 400 Hz (when an optional DP-0206 digital processor is used)
Crossover Frequency	80 Hz (when the optional DP-0206 digital processor is used)
Internal Speaker	38 cm cone type
Input Terminal	M5 screw terminal, distance between barriers: 12.2 mm, Neutrik NL4MP connectors x 2
Finish	Enclosure: Plywood, black, urethane paint Mesh grille: Rolled steel plate, black, paint
Dimensions	526.6 (w) x 594.8 (h) x 550 (d) mm
Weight	41 kg
Accessories	M8 connection bolts 4
Optional Components	Rigging frame: SR-RF8 Digital processor: DP-0206

Note: The design and specifications are subject to change without notice for improvement.

14.3. SR-RF8

Applicable Speaker	SR-C8L, SR-C8S and SR-C15B
No. of Mountable Speakers	Flying: Max. 12 speakers (optional SR-C15B is counted as 2 units) Stacking: Max. 8 speakers (optional SR-C15B is counted as 2 units)
Finish	Rolled steel plate, black, paint
Dimensions	510 (w) x 167 (h) x 690 (d) mm (bolted parts excluded)
Weight	18.5 kg (accessories included)
Accessories	M10 plate mounting bolts 12
Optional Components	Rigging support bracket: SR-SB8

Note: The design and specifications are subject to change without notice for improvement.

14.4. SR-SB8

Finish	Rolled steel plate, black, paint
Dimensions	517.5 (w) x 208 (h) x 275.8 (d) mm
Weight	10 kg (total weight of 4 pieces)

Note: The design and specifications are subject to change without notice for improvement.

14.5. SR-TP8

Applicable Speaker	SR-C8L and SR-C8S
Variable Angle Range	5° to 15°
Finish	Rolled steel plate, black, paint
Weight	1.7 kg (1 pair)

Note: The design and specifications are subject to change without notice for improvement.

14.6. SR-CL8

Applicable Speaker	SR-C8L and SR-C8S
No. of Mountable Speakers	Up to 4 speakers
Finish	Rolled steel plate, black, paint
Weight	1.5 kg (1 pair)

Note: The design and specifications are subject to change without notice for improvement.

Traceability Information for Europe

Manufacturer:
TOA Corporation
7-2-1, Minatojima-Nakamachi, Chuo-ku, Kobe, Hyogo, Japan

Authorized representative:
TOA Electronics Europe GmbH
Suederstrasse 282, 20537 Hamburg, Germany

TOA Corporation

URL: http://www.toa.jp/

133-01-473-2C