MK Electric Catalogue

by Honeywell

WIRELESS

WIRING DEVICES

CIRCUIT PROTECTION

CABLE MANAGEMENT

POWER DISTRIBUTION SYSTEMS

Catalogue No. 49

MK ELECTRIC

The Arnold Centre
Paycocke Road
Basildon
Essex SS14 3EA

Telephone	01268 563000
UK Sales Fax	01268 563405
Email	mkorderenquiries@honeywell.com

WEBSITE

For further information and other literature items please visit www.mkelectric.co.uk

TECHNICAL SERVICES

For advice on product selection, help with system planning, technical guidance, quotations and technical literature

Telephone	+44 (0)1268 563720
Fax	+44 (0)1268 563064
Email	mk.technical@honeywell.com

CUSTOMER SERVICES

For assistance regarding orders and deliveries

Telephone	+44 (0)1268 563404
Fax	+44 (0)1268 563405
Email	mkorderenquires@honeywell.com

R.O.I. CUSTOMERS

Telephone	01 4296530
Fax	01 4296501
Email	mkorders@honeywell.com

All marks in this document identified with a ® or ™ symbol adjacent to the mark are Trade Marks of Novar ED&S Limited © Novar ED&S Limited

Every reasonable effort has been made to ensure that all information in this catalogue is accurate at the time of print. Information is subject to change without prior notice. For the most up-to-date information please visit www.mkelectric.co.uk.

Wiring Devices

Range	Product Pages	Technical Data
Wireless		
Echo Wireless, batteryless, self-powered technology	21-31	437-440
White		
Logic Plus Widest selection of wiring devices in one range	32-52	441-484
Ceiling Accessories Lampholders, pendant sets and ceiling switches	53-56	492-494
Decorative		
Decorative Introduction	67-69	
Elements Revolutionary range of stylish wiring devices with touch control switches and dimmers	70-97	497-525
Aspect Range of slimline, flawless profile devices	98-128	441-484
Edge Function and style with very slim profile frontplate	130-166	441-484
Albany Plus Satin Gold and Brushed Chrome devices	167-188	441-484
Modular		
Grid Plus Modular switching and monitoring system	189-207	526-532
Lighting Controls		
Link Plug-in connection and distribution system for lighting	58-62	495-496
Sensors A range of energy saving and lighting management products	63-66	485-491
High Power Dimmer Range of dimmers to control large lighting loads	208-210	534-536

Wiring Devices & Circuit Protection

Range	Product Pages	Technical Data
Boxes and Ancillary Products		
Boxes Wide selection of surface and flush mounted, metal and PVC boxes	211-217	NA
Ancillary Products A selection of miscellaneous wiring devices	218-223	NA
Surface		
Metalclad Plus Tough, impact resistant surface mounted devices	224-235	441-484
Portable Power		
Duraplug Durable, strong and reliable accessories	236-239	538-540
Plugs and Adaptors High quality plugs and adaptors	240-241	541
Ingress Protected		
Masterseal Plus Comprehensive range of IP66 weatherproof devices	242-249	542-553
Commando Safetyswitch Impact resistant switches for indoors or outdoors	250-253	554-555
Commando Comprehensive selection of industrial plugs and connectors	254-263	556-567
Commando Combination Units RCD protection with high impact PBT units	264-267	568-573
Commando Modular Combi Factory built modular system for industrial and service applications	268-269	NA
Circuit Protection		
Sentry Consumer units and a wide variety of modular protection and control products	271-286	575-604
Sentrysocket RCD protected switchsockets with active and passive control circuits	288-289	606-607

Cable Management

Range	Product Pages	Technical Data
Perimeter and Distribution		
Prestige 3D Introduction	290	
Prestige 3D Dado and Skirting Three compartment dado trunking system for compliance with Cat 6 structured cabling	291-296	612-615
Prestige 3D Antibac Blue Antibacterial solution for power and data distribution in environments where hygiene is priority	297-303	616-617
Prestige 3D Compact 3 compartment trunking with a smaller footprint for more confined installations	305-310	618-621
Prestige 2com Two compartments provide maximum data capacity around radiused bends	311-316	623-629
Prestige Poles and Posts Poles and Posts for supplying multi-services to work stations	318-319	630-631
Powerlink Plus Busbar trunking system with flush fitting accessories	321-331	632-639
Pinnacle Versatile angular bench trunking system	332-337	640-644
Premier Integrated trunking system with snap fit mouldings	338-343	645-649
Norwich Durable and popular trunking system	344-345	650-654
Ega Industrial Heavy duty trunking in a variety of sizes	346-347	656-661
Ega Cornice Trunking for wall/ceiling junctions	348-349	662-665
Conduit and Mini		
Egatube Conduit High impact conduit with a comprehensive range of fittings	350-360	666-671
Ega Mini Trunking Wide selection of mini trunking profiles and fittings	361-365	672-674
Alarm and Communication		
Red Alert Trunking for alarm circuit identification	366-370	672-674

Power Distribution Systems

Range	Product Pages	Technical Data
Raised Floor Systems		
Interact Underfloor Power Low profile Powertrack system for single or multi-circuit applications	371-376	675-676
Cablelink Plus Modular 2, 3 and 4 module floorboxes designed for robustness	377-382	677-680
Cablelink Plus Single Pan Box Floorbox ideal for floor voids with restricted space	383-386	681-682
Slab Boxes Alternative power distribution system to floorboxes	387-390	NA
Grommets Ideal for use with Slab Box and Deskpod™	391-394	683
DeskPod™ Customisable and pre-configured desk modules	395-401	684
Screeded Floor Systems		
Onix Plus™ A unique alternative to hard floor power and data distribution	403-411	685-688
Cablelink Plus Screed System Provides adaptable power and data distribution in screed floors	413-424	689-694
Overhead Systems		
Interact Overhead Power 40A overhead Powertrack system for single, three phase or dual circuit applications	425-429	695-696
Hangmann Range of hanging power, data and compressed air modules	430-432	NA
Full Product Index		697-749
Abbreviation Key		757
Standard Conditions of Sale		758

MK ELECTRIC IS THE UK'S CHOICE

ENERGY SAVINGS | HEALTH & SAFETY | SUSTAINABILITY | QUALITY & RELIABILITY

Part of the Honeywell Global Family

In more than 100 million homes and five million buildings worldwide, Honeywell products, components and systems deliver temperature control, comfort, energy conservation and safety. As part of Honeywell's global operation, MK Electric can literally draw upon a world of technologies to develop the best products and solutions. While the bulk of MK's manufacturing and distribution is handled in the UK to serve the UK, this global access ensures MK's customers have access to the latest ideas and manufacturing advancements from around the world to deliver state-of-the-art, cost-effective products.

This global access ensures MK's customers have access to the latest ideas and manufacturing advancements from around the world

Innovation has been the driving force behind Honeywell since 1885, and as Chairman and CEO of Honeywell since 2002, David M. Cote has continued the company's commitment to developing energy-saving, sustainable products that improve the quality of life.

David M. Cote
Chairman and CEO of Honeywell

SERVING THE UK FOR ALMOST 100 YEARS

MK Electric has key manufacturing facilities in the UK, Germany, Saudi Arabia, Malaysia and India, sales offices across Europe and the Middle East, that distribute to over 100 countries and employ over 1500 people worldwide.

UK operations feature 4 locations, employs over 600 people, and is one of the few businesses to retain manufacturing sites in the UK for the UK market.

Honeywell | MK by Honeywell | TREND | Ex-Or by Honeywell | CENTRA LINE by Honeywell

Sockets | Wireless | Switches | Circuit Protection | Thermostats | Cable Management Anti-Microbial | Sensors | Lighting Management | Power Distribution | Security Lighting | Doorbells | Building Control Systems | Fluid Controls | Heating Controls

HONEYWELL ENVIRONMENTAL AND ENERGY SOLUTIONS (E&ES)

by Honeywell

For almost 100 years, MK Electric has led the market in electrical wiring accessories.

Today, MK Electric continues to lead the way in innovation with additions to the widest range of wiring accessories such as LED Dimmers, USB Charging Solutions, wireless, batteryless Echo switches, as well as the stylish MK Elements collection of wiring accessories.

MK Electric also manufactures a host of other products, including overhead and underfloor power and data distribution, cable management and circuit protection.

Honeywell

Honeywell is the UK's leading supplier of domestic heating and combustion controls, with a portfolio of products that includes time, temperature, gas and water control offerings.

Honeywell also offers over 4,000 water and heating products, amounting to a wealth of coordinated, easy to use system solutions. The portfolio includes pressure reducing valves, thermostatic mixing valves, filtration and much more.

Honeywell

Honeywell Doorbells represent the next generation in technology for the home, taking Friedland's 60 year heritage to create the best doorbells in the world.

The revolutionary range offers a wide selection of wireless and wired portfolios to ensure you never miss a visitor.

Ex-Or by Honeywell

Ex-Or are acknowledged leaders in developing elegant and innovative lighting control systems that are easy to install and maintain. Ex-Or solutions help customers to reduce their energy bills, lower their carbon footprints, and improve performance.

Ex-Or's range of new generation lighting controls switch lights off when no-one's there, and dim or switch them off when there's enough natural light, helping to reduce energy costs, sometimes as much as 70%, year after year.

TREND

Trend is one of the world's leading Building Energy Management Systems manufacturers, Through close control and monitoring of heating, ventilation, air conditioning and other building services, Trend systems are able to minimise energy consumption and maintain consistently comfortable conditions – as well as bringing other key benefits such as lower plant maintenance costs. Systems are to be found in virtually every type of non-residential building, from schools, hospitals and leisure centres to office blocks, shops and factories.

CENTRALINE by Honeywell

CentraLine is one of the fastest growing brands in the Building Automation industry. Established in 2004 by Honeywell as an independent brand for networked Building Automation, it has developed a Europe-wide infrastructure with 360 carefully selected and specially trained CentraLine PARTNERS. CentraLine solutions are based on leading Honeywell technology which is saving energy in more than 100 million homes and buildings worldwide.

Made GREAT In Britain

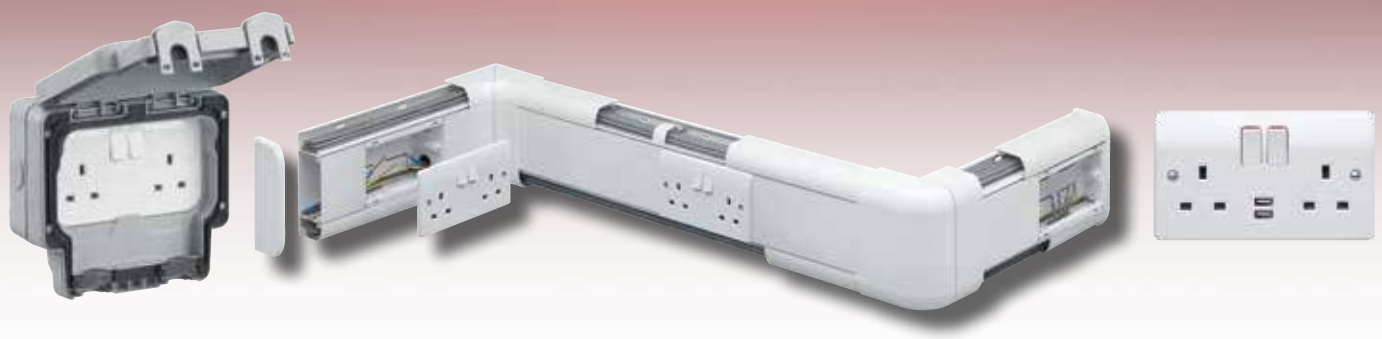

MK Electric: leading the market in Quality, Reliability, Safety and Responsibility since 1919.

As MK Electric nears its 100th anniversary the business is still evolving and innovating to meet the ever changing demands of our customers and the market place.

Quality, Reliability, Safety and Responsibility are embedded at all levels of the company. These, and our unrivalled product portfolio, see us well equipped to face the challenges that lie before us. As ever, our customers are at the centre of everything we do, and MK and Honeywell solutions and technologies are delivering new products and processes which are more energy efficient and less harmful to the environment.

Where does it come from?

Over 80% of MK products are manufactured in the UK. In the example of the MK Logic Plus 2 Gang Switch Socket Outlet for the UK market, it is estimated that the components and product travel a distance of 16 times less when manufactured in one of MK's UK facilities, compared to one produced in a Far Eastern facility. With over 70,000 less miles travelled from the UK manufactured socket there is a clear reduction in the products' carbon footprint when compared to one of its Far Eastern manufactured counterparts.

Wherever possible MK Electric manufacture within, or close to, a local market. This not only keeps the transportation of components and finished products to a minimum, but also allows us to react quickly to changes in the market requirements. Products come off the production line and are delivered direct to our UK warehouse within 24 hours. Far Eastern manufactured products can often spend over 3 months in transit, negating any opportunity for late changes in production to meet a specific market or customer demand.

Who made it?

All MK Electric factories operate to the Health, Safety and Environmental Management Standards implemented globally by Honeywell. In addition all MK Electric Operating Sites are accredited to the following third party assessed international standards:

ISO 9001	**Quality**
OHSAS 18001	**Health & Safety**
ISO 14001	**Environment**

MK Electric

"We consider the well being of workers in our international supply chains to be a priority.

As a condition of supply we ensure that all goods made on our behalf are produced in conditions that are safe, decent and that support working people in maintaining a reasonable standard of living".

MK ELECTRIC BRAND VALUES

Responding to our customers' and market feedback, we are constantly striving to develop ever more innovative products underpinned by excellent customer service levels.

Quality and Reliability

At MK we pride ourselves on using superior manufacturing techniques in all our manufacturing sites. All MK products are manufactured from superior quality materials to ISO 9001 certification.

Whilst other manufacturers may make claims on reliability, MK products are truly reliable, we demonstrate this with comprehensive product guarantees of up to 20 years*.

All MK products undergo rigorous testing to ensure maximum Quality, Reliability and Safety. Each product undergoes 100% electrical and visual testing at the point of manufacture. British Standards require a socket outlet to be tested to 15,000 socket insertions – the MK test laboratory has tested MK sockets to over 1,000,000 plug insertions with no reported faults, or issues with wear and tear. Similarly, British Standards require a 10A switch to be tested to 20,000 switches, the MK test laboratory has tested MK switches to over 1,000,000 on-off switch operations with no reported faults, or issues with wear and tear.

*See individual ranges for exceptions

MK Electric's range of

LOGIC PLUS

ELEMENTS

ASPECT

EDGE

MASTERSEAL PLUS

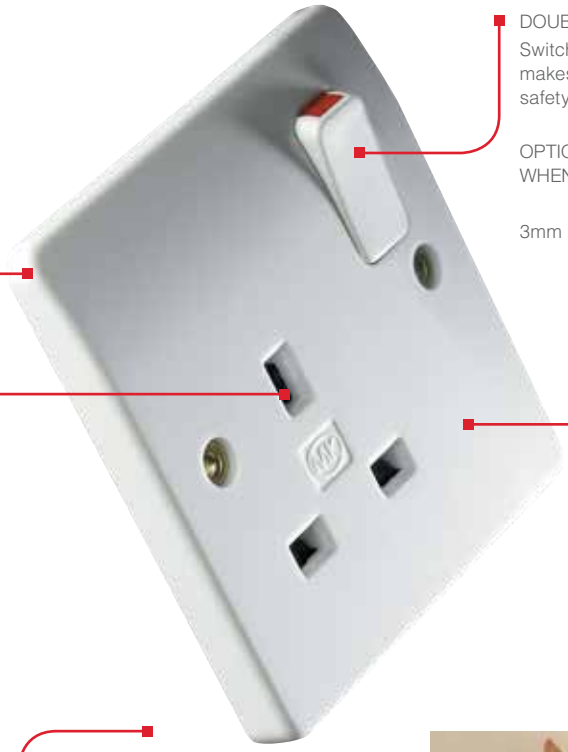

CONTOURED TO BLEND INTO THE WALL

DOUBLE POLE SWITCHING
Switches both live and neutral (neutral makes first, breaks last) means added safety for the user

OPTIONAL NEON INDICATOR ILLUMINATES WHEN SWITCH IS ON

3mm MINIMUM SWITCH CONTACT GAP

HIGH GLOSS, HIGH QUALITY THERMOSET MATERIAL
Inherent antimicrobial properties, resists scratching, maintains appearance

3-PIN "CHILD RESISTANT SHUTTER SYSTEM"
Designed to inhibit access to the electricity supply, unless all 3 pins of a standard British 13A plug are in position

wiring devices

ECHO

ALBANY PLUS

METALCLAD PLUS

*See individual ranges for exceptions

- ✓ Quality – Manufactured to ISO 9001 certification, using superior manufacturing techniques
- ✓ Reliability – Comprehensive 20 year product guarantee, 10 years for Electronic Devices, Circuit Protection and Cable Management*
- ✓ Safety – 100% factory tested, each product undergoes up to 200 individual tests, for a 'fit and forget' installation every time
- ✓ Responsibility – Our solutions and technologies expand sustainable capacity and improve the efficiency of products and processes, fostering sustainability.

Safety

MK Sockets – The Safest Available

MK's sockets have a "child resistant shutter system", which is designed to inhibit access to the electricity supply, unless all three pins of a British plug are in position.

By choosing our sockets, you can be sure that you are giving your building the ultimate in electrical protection. All electrical sockets manufactured to the British Standard must incorporate a shutter mechanism. British Standards require that a minimum safety level is achieved in the design and manufacture of electrical accessories. MK's socket design offers the maximum safety benefit and is the most difficult shutter mechanism to defeat unless correctly used with a British plug.

All standard 13A MK sockets incorporate the 3-pin operated shutter system.

MK ELECTRIC BRAND VALUES

Safety

Anti-Microbial Products

The issues around the cleanliness within health establishments such as hospitals, surgeries and dentists etc. continue to be raised by health professionals, government departments, the media and the general public.

In 2008, MK Electric commissioned independent testing on the Logic Plus range and a competitor's 'Anti-Microbial' range by a reputable independent UKAS accredited laboratory. The laboratory tested the products, after cleaning with disinfectant (the Government's 'Deep Clean' policy targeted all hospitals to adopt a deep clean program, which includes cleaning all fixtures and fittings). The organisms MRSA, E-Coli, Salmonella and Klebsiella Pneumoniae were applied to the products. Results were collected at 0 minutes, 4 hour, 8 hour and 24 hour intervals.

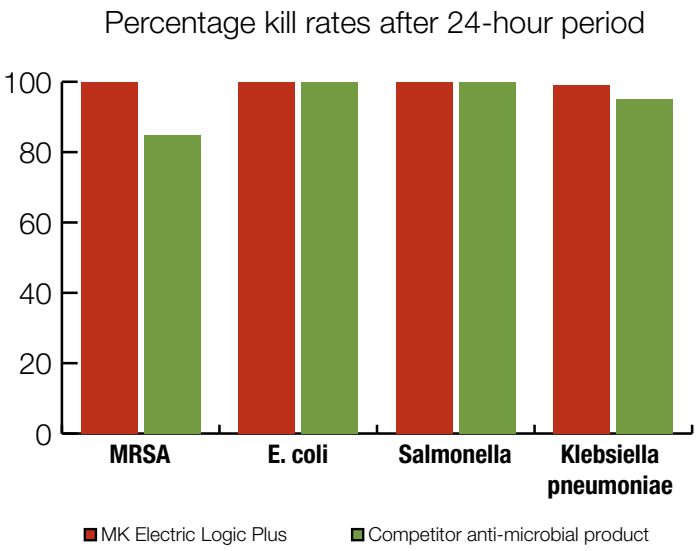

Source: MK commissioned report, 2008

The Results

MRSA

Logic Plus has a kill rate of 99.9% compared to the competitor's Anti Microbial product with only 86.4%. Both products had an equal 99.9% kill rate for **E-Coli** and **Salmonella.**

Klebsiella Pneumoniae

Logic Plus has a kill rate of 98.9%, compared to the competitor's Anti Microbial product with 95.4%. The Logic Plus range is produced using Urea Formaldehyde, a high grade thermoset material, which has similar inherent properties to antimicrobial additives, which inhibit the growth of infectious diseases such as MRSA, E-Coli, Salmonella and Klebsiella Pneumoniae. In addition, Logic Plus products are scratch-free thanks to high quality mould tools, which means there are no dirt traps for bacteria to breed. Whilst cleanliness is key to fighting these infections, and not replaced by the use of MK's Logic Plus products, the independent results show that the range is more effective than a competitor's Anti-Microbial products at killing MRSA organisms and contributes beneficially to any hygiene regime.

MK SENSORS: ENERGY SAVING SOLUTIONS FOR LIGHTING CONTROL

Responsibility

MK Electric, and the wider Honeywell business, has teams of engineers and technology specialists working to develop new products for our customers and processes for our business.

Honeywell's energy efficient technologies help our global customers better meet the growing demand for electricity while curbing fossil fuel emissions. 50% of Honeywell's $38.6 billion product portfolio is geared towards delivering energy savings and efficiency – from building management and process solutions systems to biofuel technologies and turbocharged engine platforms.

To Honeywell, environmental stewardship means acting in a way that is both productive and sustainable. We design products that help conserve energy, reduce waste, and protect our homes, offices and public buildings. We help other companies become more efficient and productive with our products and solutions.

Honeywell solutions and technologies expand sustainable capacity and improve the efficiency of products and processes, fostering what we call our 'Sustainable Opportunity'.

ALL MK MANUFACTURING SITES ARE WORKING UNDER ENVIRONMENTAL MANAGEMENT SYSTEMS TO REDUCE THEIR IMPACT ON THE ENVIRONMENT

JUST PRODUCTS THE WAY YOU WANT THEM

The MK Design Service offers customers bespoke products, perfect for when only a customised solution can meet your requirements. Whether you want to highlight furnishings, accentuate lighting or simply blend in with the overall décor, our dedicated team can help to put the accent on style and creativity – from concept to completion.

Sometimes though it's about more than just aesthetics. The MK Design Service Team have created additional tamper proof features on products destined for prisons or schools, unique combination plates hosting a range of European or worldwide sockets for global hotel chains along with many other custom solutions, in order to satisfy specific project requirements.

The Right Tools

The MK Design Service Team spent six months interviewing architects and interior designers to assess how technology could help them do a better job of delivering bespoke light switches and electric sockets for their clients and the results were fascinating. The designers interviewed all stressed the importance of instantaneous samples in order to effectively source materials for a room or space. Paired with this, the ability to change that sample graphically in real time was also a key priority.

For example, if a designer is with a client or customer and there are 5-6 different finishes that may work for a room – they may be looking for the perfect front plate to match a black granite countertop or a metallic finish to blend with stainless steel appliances.

The tool allows designers to work with their clients to narrow that selection down to 2-3 just by having the ability to show the selected background or surroundings.

The MK Electric Design Tool is optimised to work with MK Elements Collection on a tablet or laptop.*

Ultimately ensuring designers are equipped with a tool where they can produce, store and manage their own wiring accessory designs – with the ability to generate thousands of new design combinations with different colours, textures and materials – will result in satisfied clients, quicker turnaround for room completion and further differentiation from competitors.

*designtool.mkelements.com

Function

In addition to the aesthetics of the product, the MK Design Service Team can work with you to create bespoke functionality into your creation.

Giving you total control at your fingertips. Such functionality could include enhanced security features, providing you with a product suitable for the most demanding environments.

Figure

The devil is in the detail, you can add a level of detail that identifies key functions or adds that personal or corporate touch with discreet logos, symbols or text.

Form

If square and rectangle do not suit, then that's not a problem. Together with MK, design unique shapes to suit your aspirations.

Good design however, is nothing without delivery. The MK Design Service is totally focused on achieving the perfect result, utilising its technical, manufacturing and supply expertise to ensure your vision is realised.

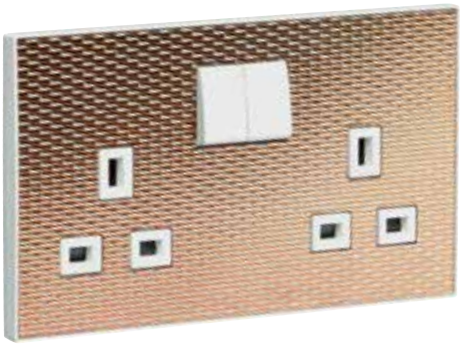

Turn an idea into reality, a desire into a finished design, an inspiration into a statement. MK's Design Service Team can help you achieve your design goals.

Email: design.service@honeywell.com *Telephone: 01268 563720*

HONEYWELL'S SUSTAINABLE OPPORTUNITY POLICY

Based on the principle that by integrating health, safety, and environmental considerations into all aspects of its business, Honeywell protects its people, its communities, and the environment; achieves sustainable growth and accelerated productivity; drives compliance with all applicable regulations; and develops technologies that expand the sustainable capacity of our world.

Greenhouse Gas and Energy Efficiency

Our commitment to be more efficient and responsible is reflected in the extensive work we do to make our businesses more environmentally friendly, safer, and more sustainable. By 2019 Honeywell will reduce our global greenhouse gas emissions by an additional 10 percent per dollar of revenue from our 2013 levels.

We exceeded our first public goal to reduce global greenhouse gases by more than 30 percent and improve energy efficiency by more than 20 percent between 2004 and 2011.

A second five-year goal, set to reduce greenhouse gas emissions by an additional 15 percent per dollar of revenue from 2011 levels, was met three years early.

Since 2010, our facilities have implemented more than 2,100 efficiency projects including building automation/controls, lighting, and mechanical upgrades.

We exceeded our first public goal to reduce global greenhouse gases by more than 30 percent and improve energy efficiency by more than 20 percent between 2004 and 2011.

Safety

A sustainable environment is also a safe environment. Our corporate-wide core processes identify and address risks and promote a culture of safety excellence. In fact, we have achieved a safety record that is more than two times better than the average of the industries in which we do business.

Nearly 50 percent of our portfolio is dedicated to energy efficient products and services. From programmable thermostats and energy management systems to turbochargers and green fuels to industrial controls and lighter aircraft components, our technologies are building a world that is safer and more secure, more comfortable and energy efficient, and more innovative and productive… right now.

In fact, the use of Honeywell technologies could reduce energy demand in the United States and Europe by 20 to 25 percent if they were immediately and comprehensively adopted across the residential, commercial, industrial, and transportation sectors.

GETTING READY FOR LEVEL 2 BIM COMPLIANCE

Building Information Modeling (BIM), the generation and management of digital representations of physical and functional characteristics, has been around for over 20 years and has gained steady traction in the construction industry.

BIM, and the coordination, efficiency, cost and planning benefits it provides has been championed by the UK government. They have introduced legislation requiring all manufacturers to become Level 2 BIM compliant by 1st April 2016, ensuring they provide the minimum amount of data regarding products now being required for all UK Government projects.

Manufacturers already have the required information to become compliant, but a simple and industry-wide approach to product data parameters and templates has until now been a challenge.

The industry must come together to create a single and unified approach to product data. Without this, the cost and time savings released by BIM will not be achieved, as key functions such as clash detection and product compatibility issues will be missed. Environmental benefits from product re-use and recycling will also likely be overlooked.

MK Electric, alongside Honeywell, is leading the way in BIM standardisation for the industry working with BEAMA, CIBSE, the UK government, and several other manufacturers to ensure that the industry collaborates and defines a consistent way forward.

MK Electric is committed to supporting the evolving needs of the digital construction industry, by providing contractors, architects and consultants access to the accurate and reliable data they need to comply with relevant European and international standards.

Visit mkelectric.co.uk for more information.

ECHO™

RANGE INTRODUCTION

Imagine switch technology and automated systems that need no wiring, use no batteries and are effortless to install and commission. Echo™ is an innovative range of entirely wireless, batteryless and self-powered switches and controls which can work together offering even more convenience and energy saving opportunities.

Echo™ enables you to create your own automated control system for a domestic or commercial environment. With the ability to incorporate a range of transmitters from switches and presence detectors, alongside a range of receivers, the installer can create a flexible system which can deliver safety, comfort, cost savings and energy efficiency for the building owner or user.

The MK Echo™ portfolio is enabled by EnOcean technology. EnOcean based products make use of the energy generated by slight changes in pressure, light levels or temperature, to provide self-powered, batteryless and wireless solutions. This technology is used by many world leading manufacturers, products from these companies can be used together to provide solutions for energy efficient buildings which are more flexible and cost efficient to design, build and operate.

To find out more visit www.mkelectric.co.uk.

FEATURES & BENEFITS

WIRELESS
Instant installation and location flexibility, reducing disruption and cost, as there is no need to run switching cables.

SELF-POWERED
Innovative patented technology to 'harvest' energy means zero maintenance as there are no batteries to change.

ULTIMATE FLEXIBILITY
Each receiver can be controlled by up to 32 switches/transmitters.

ENERGY SAVINGS
With additional local control, alongside the use of presence detectors users can create an energy efficient environment.

HOW TO SPECIFY

A range of switches and controls which are self powered and to be enabled by EnOcean technology. Transmitters to be totally wireless and batteryless, with no direct connection to the final circuit. All transmitter modules to be available in a range of aesthetics and finishes which match to other required wiring accessories. Receivers to have the ability to be controlled by up to 32 switches/transmitters. All products to be manufactured in Europe.

Echo™

APPLICATION EXAMPLE: HOTEL BEDROOM

In this example the installer is able to create an automated system ensuring comfort for the guest, whilst delivering energy efficiency and cost savings for the hotel without disturbing the fabric of the room. In addition, with wireless transmitters, the layout and positioning is completely flexible and can be changed quickly without disruption.

The guest is able to easily control their local environment from a number of locations within the room. A 2 channel transmitter by the entry doorway enables control of both the bedroom and living area lighting. An additional 4 channel transmitter next to the bed gives further control of the bedroom and living area lighting and an all off function. There is additional control in the bathroom and on the balcony.

The hotel is able to control all lighting, heating and cooling by the card switch transmitter, ensuring guests do not leave lighting or air conditioning on when they leave the room. The hotel is also able to ensure a safe environment; the presence detector can be programmed to turn low level lighting on when a guest enters the room. In addition the presence detector can be programmed to turn lighting off, or dim to a low level when no presence is detected in the room but the card switch is still in place. Door contacts ensure the air conditioning is not in use whilst the balcony doors are open, offering further energy savings.

SWITCH RECEIVER

PLUG-THROUGH SWITCH RECEIVER

4 CHANNEL TRANSMITTER
1 - Living area lights
2 - Bedroom lights
3 - Plug-through light
4 - All off

1 CHANNEL TRANSMITTER

SWITCH RECEIVER

2 CHANNEL TRANSMITTER
1 - Bedroom Lights
2 - Living area

CARD TRANSMITTER

Echo™

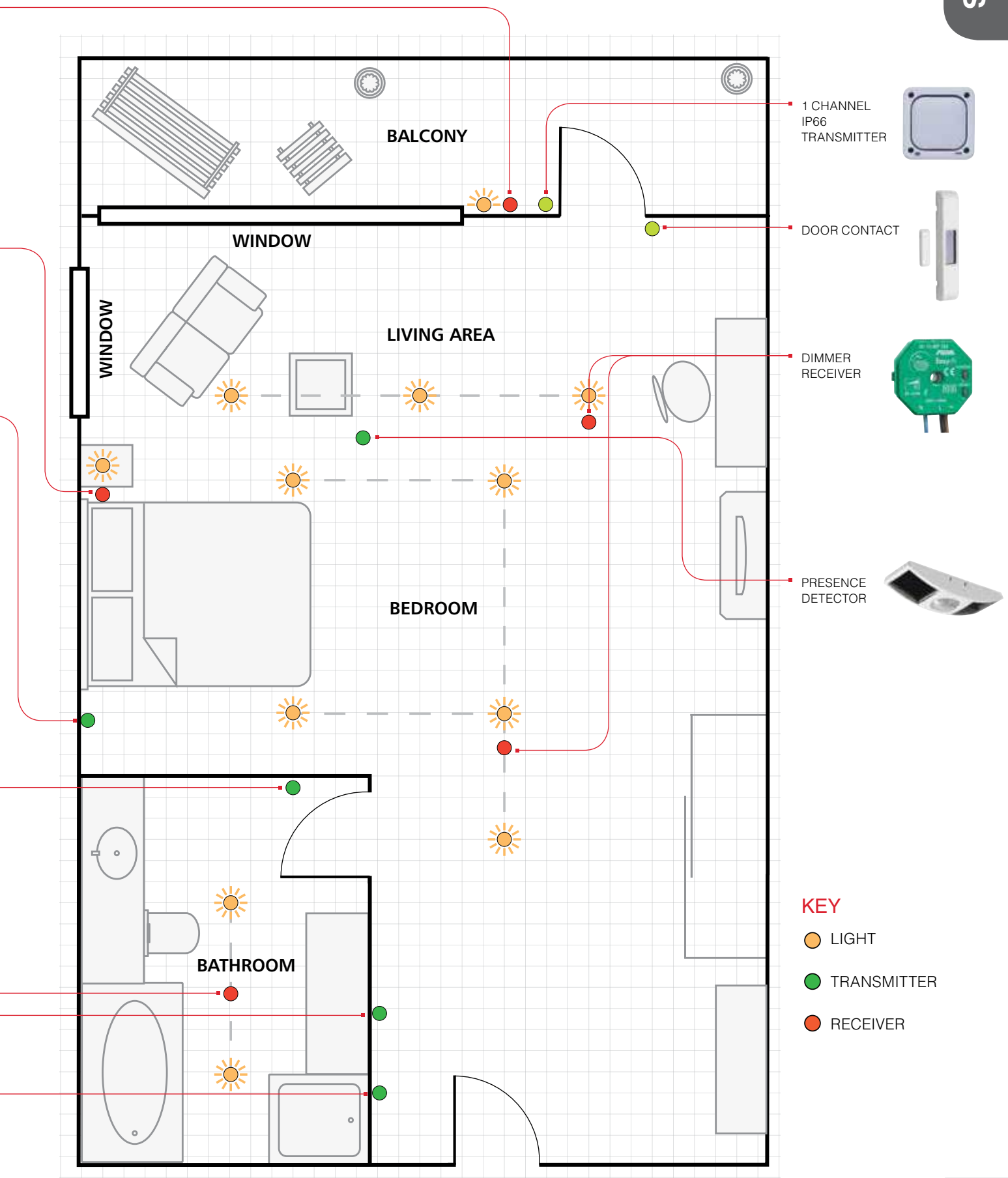

FLOORPLAN IS FOR ILLUSTRATIVE PURPOSES ONLY. FOR DETAILS ON USAGE PLEASE SEE THE PRODUCT PAGES

Echo™

Modular Transmitters

	1 CHANNEL MODULAR TRANSMITTER	2 CHANNEL MODULAR TRANSMITTER	MODULAR CARD SWITCH TRANSMITTER
FINISHES			
WHITE	**K5786WHI** 1	**K5789WHI** 1	**K5744CWHI** 1
BLACK	**K5786BLK** 1	**K5789BLK** 1	**K5744CBLK** 1
ALUMINIUM	**K5786ALU** 1	**K5789ALU** 1	**K5744CALU** 1
	For use with K5776, K5779 frames and K5412 locator.	For use with K5776, K5779 frames and K5412 locator.	For use with K5776, K5779 frames and K5412 locator.
	OPERATING FREQUENCY 868.3Mhz **IP RATING** IP2 x D **DIMENSIONS** 55 x 55mm ETSI EN 301489-1/3 ETSI EN 300220-1/2	**OPERATING FREQUENCY** 868.3Mhz **IP RATING** IP2 x D **DIMENSIONS** 55 x 55mm ETSI EN 301489-1/3 ETSI EN 300220-1/2	**OPERATING FREQUENCY** 868.3Mhz **IP RATING** IP2 x D **DIMENSIONS** 55 x 55mm ETSI EN 301489-1/3 ETSI EN 300220-1/2

MOUNTING SWITCH TRANSMITTERS: All can be mounted directly to the wall surface – screws supplied.
All can be mounted to back boxes – screws supplied.
Logic Plus™ and Aspect type transmitters can also be mounted using supplied adhesive pads

Modular Frames

FINISHES	1G FRAME GLOSSY FINISH		2G FRAME GLOSSY FINISH	
WHITE	K5776WHI	1	K5779WHI	1
BLACK	K5776BLK	1	K5779BLK	1
ALUMINIUM	K5776ALU	1	K5779ALU	1
	For use with K5412 locator and K5786, K5789, K5744, K5744C transmitters. Surface mount installation only. **DIMENSIONS** 83 x 83mm		For use with K5412 locator and K5786, K5789, K5744, K5744C transmitters. Surface mount installation only. **DIMENSIONS** 83 x 154mm	

FINISHES	1G FRAME GLOSSY FINISH		2G FRAME GLOSSY FINISH	
GLASS, BLACK	K5776GLAB	1	K5779GLAB	1
GLASS, GREEN	K5776GLAG	1	K5779GLAG	1
GLASS, ALUMINIUM	K5776GLAA	1	K5779GLAA	1
GLASS, GROOVED ALUMINIUM	K5776GLAGA	1	K5779GLAGA	1
	For use with K5412 locator and K5786, K5789, K5744, K5744C transmitters. Surface mount installation only. **DIMENSIONS** 85 x 85mm		For use with K5412 locator and K5786, K5789, K5744, K5744C transmitters. Surface mount installation only. **DIMENSIONS** 85 x 157mm	

MOUNTING SWITCH TRANSMITTERS: All can be mounted directly to the wall surface – screws supplied.
All can be mounted to back boxes – screws supplied.
Logic Plus™ and Aspect type transmitters can also be mounted using supplied adhesive pads

Echo™

Transmitters

Logic Plus™

1 CHANNEL TRANSMITTER

2 CHANNEL TRANSMITTER

FINISHES				
WHITE	K4786WHI	1	K4789WHI	1
GRAPHITE	K4786GRA	1	K4789GRA	1

OPERATING FREQUENCY
868.3Mhz
IP RATING
IP2 x D
DIMENSIONS
86 x 86mm
ETSI EN 301 489-1 + -3 :
ESTI EN 300 220-3

OPERATING FREQUENCY
868.3Mhz
IP RATING
IP2 x D
DIMENSIONS
86 x 86mm
ETSI EN 301 489-1 + -3 :
ESTI EN 300 220-3

Aspect

1 CHANNEL TRANSMITTER

2 CHANNEL TRANSMITTER

FINISHES				
BRUSHED STAINLESS STEEL	K23476BSS*	1	K23477BSS*	1
LACQUERED BRUSHED STEEL	K23476LBS*	1	K23477LBS*	1
BRUSHED CHROME	K23476BRC*	1	K23477BRC*	1
POLISHED CHROME	K23476POC*	1	K23477POC*	1
SATIN GOLD	K23476SAG*	1	K23477SAG*	1
PORCELAIN WHITE	K23476WHIW	1	K23477WHIW	1
LUSTROUS IVORY	K23476LIVW	1	K23477LIVW	1
LUSTROUS BLACK	K23476LBKB	1	K23477LBKB	1
POLISHED BRASS	K23476PBR*	1	K23477PBR*	1
TEXTURED IRON	K23476TIRB	1	K23477TIRB	1
DESERT BRONZE	K23476DBZB	1	K23477DBZB	1
ANTIQUE BRASS	K23476ABSB	1	K23477ABSB	1
TEXTURED COPPER	K23476TCOB	1	K23477TCOB	1

* Available with the option of either White or Black inserts. Add Suffix 'W' or 'B' to part number when ordering, E.g. KxxxxBSSW.
Where there is no asterix, the final suffix W = White Insert, B = Black Insert, E.g. KxxxxWHIW = Porcelain White finish with White inserts

LEAD TIMES
Please contact our Customer Services Department on:
01268 563 404

OPERATING FREQUENCY
868.3Mhz
IP RATING
IP2 x D
DIMENSIONS
86 x 86mm
ETSI EN 301 489-1 + -3 :
ESTI EN 300 220-3

OPERATING FREQUENCY
868.3Mhz
IP RATING
IP2 x D
DIMENSIONS
86 x 86mm
ETSI EN 301 489-1 + -3 :
ESTI EN 300 220-3

MOUNTING SWITCH TRANSMITTERS: All can be mounted directly to the wall surface – screws supplied. All can be mounted to back boxes – screws supplied. Logic Plus™ and Aspect type transmitters can also be mounted using supplied adhesive pads

Edge™

Albany Plus™

1 CHANNEL TRANSMITTER		2 CHANNEL TRANSMITTER		1 CHANNEL TRANSMITTER		2 CHANNEL TRANSMITTER	
K13476BSS*	1	K13477BSS*	1	K4766BSS	1	K4767BSS	1
K13476LBS*	1	K13477LBS*	1				
K13476BRC*	1	K13477BRC*	1	K4766BRC	1	K4767BRC	1
K13476POC*	1	K13477POC*	1	K4766PCR	1	K4767PCR	1
K13476SAG*	1	K13477SAG*	1	K4766SAG	1	K4767SAG	1
K13476WHIW	1	K13477WHIW	1				
K13476LIVW	1	K13477LIVW	1				
K13476LBKB	1	K13477LBKB	1				
K13476PBR*	1	K13477PBR*	1				
K13476TIRB	1	K13477TIRB	1				
K13476DBZB	1	K13477DBZB	1				
K13476ABSB	1	K13477ABSB	1				
K13476TCOB	1	K13477TCOB	1				

* Available with the option of either White or Black inserts. Add Suffix 'W' or 'B' to part number when ordering, E.g. KxxxxBSSW.
Where there is no asterix, the final suffix W = White Insert, B = Black Insert, E.g. KxxxxWHIW = Porcelain White finish with White inserts

OPERATING FREQUENCY
868.3Mhz
IP RATING
IP2 x D
DIMENSIONS
86 x 86mm
ETSI EN 301 489-1 + -3 :
ESTI EN 300 220-3

OPERATING FREQUENCY
868.3Mhz
IP RATING
IP2 x D
DIMENSIONS
86 x 86mm
ETSI EN 301 489-1 + -3 :
ESTI EN 300 220-3

OPERATING FREQUENCY
868.3Mhz
IP RATING
IP2 x D
DIMENSIONS
86 x 86mm
ETSI EN 301 489-1 + -3 :
ESTI EN 300 220-3

OPERATING FREQUENCY
868.3Mhz
IP RATING
IP2 x D
DIMENSIONS
86 x 86mm
ETSI EN 301 489-1 + -3 :
ESTI EN 300 220-3

MOUNTING SWITCH TRANSMITTERS: All can be mounted directly to the wall surface – screws supplied. All can be mounted to back boxes – screws supplied. Logic Plus™ and Aspect type transmitters can also be mounted using supplied adhesive pads

Echo™

Transmitters

	Metalclad Plus™		Masterseal Plus™		Other	
	1 CHANNEL TRANSMITTER	2 CHANNEL TRANSMITTER	1 CHANNEL TRANSMITTER	2 CHANNEL TRANSMITTER	REMOTE CONTROL TRANSMITTER	WINDOW/ DOOR CONTACT TRANSMITTER
FINISHES						
ALUMINIUM	**K3786ALM** 1	**K3787ALM** 1			**K5417R** 1	**K5421** 1
GREY			**K55400GRY** 1	**K55406GRY** 1		
WHITE	**K3786WHI** 1	**K3787WHI** 1	**K55400WHI** 1	**K55406WHI** 1		
BLACK			**K55400BLK** 1	**K55406BLK** 1		
	OPERATING FREQUENCY 868.3 Mhz **IP RATING** IP2 x D **DIMENSIONS** 86 x 86mm ETSI EN 301 489-1 + -3 : ESTI EN 300 220-3	**OPERATING FREQUENCY** 868.3 Mhz **IP RATING** IP2 x D **DIMENSIONS** 86 x 86mm ETSI EN 301 489-1 + -3 : ESTI EN 300 220-3	**OPERATING FREQUENCY** 868.3 Mhz **IP RATING** IP66 **DIMENSIONS** 95 x 95 x 57mm ETSI EN 301 489-1 + -3 : ESTI EN 300 220-3	**OPERATING FREQUENCY** 868.3 Mhz **IP RATING** IP66 **DIMENSIONS** 95 x 95 x 57mm ETSI EN 301 489-1 + -3 : ESTI EN 300 220-3	**OPERATING FREQUENCY:** 868.3 Mhz **IP RATING** IP2 x D **DIMENSIONS** 50 x 82 x 21mm ETSI EN 301 489-1 + -3 : ESTI EN 300 220-3	**Provides interlock functionality for use with multi-function receivers.** Solar powered. **OPERATING FREQUENCY:** 868.3Mhz **IP RATING** IP40 **DIMENSIONS** 110 x 19 x 15mm and 23 x 14 x 6mm BS EN 301489-1/3 BS EN 300220-1/2

MOUNTING SWITCH TRANSMITTERS: All can be mounted directly to the wall surface – screws supplied. All can be mounted to back boxes – screws supplied. Logic Plus™ and Aspect type transmitters can also be mounted using supplied adhesive pads

Receivers

1 Channel Switch Receivers

2 Channel Switch Receivers

1 Channel Dimmer Receiver

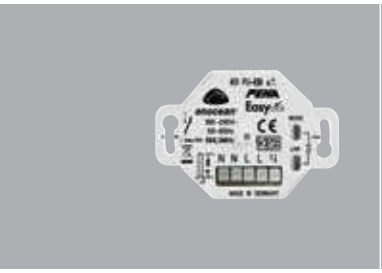

K5432R 1
1 CHANNEL
MULTI-FUNCTION
SWITCH RECEIVER

Multi-functional device with repeater functionality providing: single button, stairwell, time-delay, fan, scene operating modes and interlock functions for use with window contact.

SUPPLY
230V / 50Hz
LOAD RATINGS
GLS/Incandescent: 2500W
Halogen: 1200W
Inductive: 600VA
ELECTRONIC BALLASTS
3 units
OPERATING FREQUENCY
868.3MHz
DIMENSIONS
Depth: 27mm
BS EN 60669-2-1
BS EN 301489-1/3
BS EN 300220-1/2

K5431R 1
1 CHANNEL
VOLT-FREE,
MULTI-FUNCTION
SWITCH RECEIVER

Multi-functional device with repeater functionality providing: single button, stairwell, time-delay, fan, scene operating modes and interlock functions for use with window contact.

SUPPLY
230V / 50Hz
LOAD RATINGS
GLS/Incandescent:
1200W @ 230Vac
50W @ 30Vdc
Halogen: 600W @ 230Vac
OPERATING FREQUENCY
868.3MHz
DIMENSIONS:
Depth: 27mm
BS EN 60669-2-1
BS EN 301489-1/3
BS EN 300220-1/2

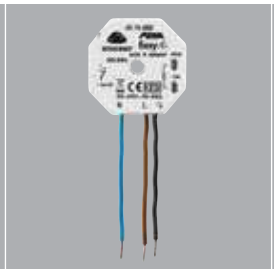

K5437R 1
1 CHANNEL
MULTI-FUNCTIONAL SWITCH
RECEIVER LEADED

Multi-functional device with repeater functionality providing: single button, stairwell, time-delay, fan, scene operating modes and interlock functions for use with window contact.

SUPPLY
230V / 50Hz
LOAD RATINGS
GLS/Incandescent: 2500W
Halogen: 1200W
Inductive: 600VA
ELECTRONIC BALLASTS
3 units
OPERATING FREQUENCY
868.3MHz
DIMENSIONS
Depth: 27mm
BS EN 60669-2-1
BS EN 301489-1/3
BS EN 300220-1/2

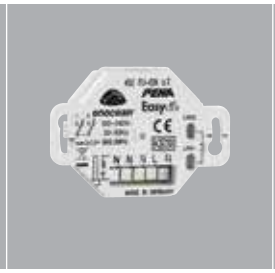

K5433R 1
2 CHANNEL
MULTI-FUNCTION SWITCH
RECEIVER

Multi-functional device with repeater functionality providing: single button, stairwell, time-delay, fan, scene operating modes and interlock functions for use with window contact.

SUPPLY
230V / 50Hz
LOAD RATINGS
(per channel)
GLS / incandescent: 500W
Halogen: 100W
Inductive: 100VA
Electronic Ballasts: 1 unit
OPERATING FREQUENCY
868.3MHz
DIMENSIONS
Depth: 27mm
BS EN 60669-2-1
BS EN 301489-1/3
BS EN 300220-1/2

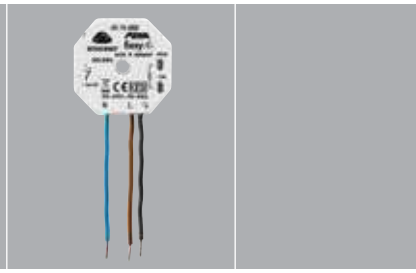

K5436R 1
1 CHANNEL
MULTI-FUNCTIONAL
DIMMER RECEIVER
LEADED

Multi-functional device providing: soft start, turn-on memory, switch, stairwell and scene operating modes.

SUPPLY
230V / 50Hz
LOAD RATINGS
60-210W
Suitable for use with GLS/ Incandescent/Halogen lamps and 12V low voltage lighting powered by dimmable electronic transformers only.
OPERATING FREQUENCY
868.3MHz
DIMENSIONS
Depth: 27mm
BS EN 60669-2-1
BS EN 301489-1/3
BS EN 300220-1/2

Echo™

Receivers

Plug-Through Receiver

K5427S 1
PLUG-THROUGH
SWITCH

Multi-functional device providing: single button, stairwell, time-delay, fan, scene operating modes and interlock functions for use with window contact.

SUPPLY
230V / 50Hz
LOAD RATINGS
GLS/Incandescent: 2500W
Halogen: 1250W
Inductive: 600VA
Electronic Ballasts: 3 units
OPERATING FREQUENCY
868.3MHz
DIMENSIONS
130 x 68 x 48mm
BS EN 60669-2-1
BS EN 301489-1/3
BS EN 300220-1/2

Alternative Receiver

K5420R 1
10AX SWITCH
RECEIVER/REPEATER

OPERATING FREQUENCY
868.3Mhz
IP RATING
IP2 x D
DIMENSIONS
175.5 x 50.3 x 32.25mm
BS EN 60669-1 :
BS EN 60669-2-1 :
ETSI EN 301 489-1 + -3 :
ESTI EN 300 220-3

Presence Detector

SOLAR-PRESENCE DETECTOR

Accessories

K5756 1
SENDS WIRELESS SIGNALS TO RECEIVING DEVICES WHEN MOTION IS DETECTED.

HARVESTS INDOOR LIGHT TO POWER THE SENSOR WITH OPTIONAL BACKUP BATTERY.

OPERATING FREQUENCY
868.3Mhz
IP RATING
IP50
DIMENSIONS
160 x 60 x 37mm
EN301489-1/3
EN300220-1/2

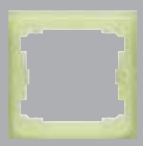

K5412L 1
LUMINOUS LOCATOR FRAME FOR USE WITH MODULAR TRANSMITTERS

K4710P 1
SURFACE MOUNTED PATTRESS FOR USE WITH LOGIC PLUS™ TRANSMITTER

K55000GRY 1
K55000WHI 1
K55000BLK 1
IP66 ENCLOSURE FOR USE WITH RECEIVERS, CHECK INDVIDUAL RECEIVER DIMENSIONS

KPAD 1
ADHESIVE PAD FOR USE WITH LOGIC PLUS™ SWITCH TRANSMITTER AND ASPECT SWITCH TRANSMITTER

MOUNTING SWITCH TRANSMITTERS: All can be mounted directly to the wall surface – screws supplied.
All can be mounted to back boxes – screws supplied.
Logic Plus™ and Aspect type transmitters can also be mounted using supplied adhesive pads

LOGIC PLUS™

RANGE INTRODUCTION

Logic Plus™ wiring devices from MK Electric have been designed to perfectly complement modern interiors, offering an unobtrusive and sophisticated look totally in keeping with today's design.

Technically, they exceed British Standard requirements with patented features that make these products the most advanced and safest available.

Logic Plus™ products are made from a high grade thermoset material which has an inherent antimicrobial property.
In independent tests, the Logic Plus™ products were equal to, or exceeded, competitor 'Anti-Bac' products when tested for resistance to MRSA, E.Coli, Salmonella and Klebsiella pneumoniae.

They are easy to install and available through our extensive distributor network. The range is backed by MK's quality and reliability and provides the largest selection of wiring devices in any single range.

HOW TO SPECIFY

A Urea moulded Anti-Bacterial range of wiring accessories, designed with a soft curved edge and a chamfered top edge that prevents dust collection, whilst offering a slim unobtrusive appearance. Cable connections must be upward facing, with easy to identify white markings on a dark background and grouped in a straight line with captive terminals screws for ease of installation. All sockets to have a 3 pin operated shutter safety mechanism and double pole switching, with the contacts arranged such that the neutral pole makes before and breaks after the live pole to improve safety.

FEATURES & BENEFITS

TOTAL SAFETY

3-pin operated 'child resistant shutter system', which is designed to inhibit access to the electricity supply, unless all 3 pins of a standard British 13A plug are in position. Logic Plus™ products include an inherent antimicrobial property as a result of the high grade thermoset material used to manufacture.

UNRIVALLED QUALITY AND RELIABILITY

Products are made from the very best materials and production processes. All products are 100% tested.

QUICK AND EASY TO INSTALL

Features to ensure a quick and easy installation come as standard across the range, including in-line terminals, funnel entrances to terminals, backed out and captive screws and clear terminal markings.

EXTENSIVE RANGE

Outstanding selection of wiring devices providing a total solution.

20 YEAR GUARANTEE

Gives total peace of mind to you and your customers. (Up to 10 year guarantee on electronic products)

Logic Plus™

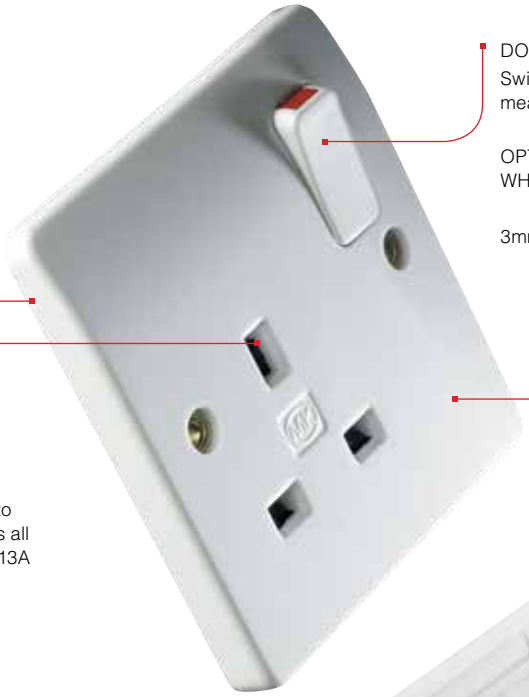

CONTOURED TO BLEND INTO THE WALL

DOUBLE POLE SWITCHING
Switches both live and neutral (neutral makes first, breaks last) means added safety for the user

OPTIONAL NEON INDICATOR SHOWS WHEN SWITCH IS ON

3mm MINIMUM SWITCH CONTACT GAP

3-PIN "CHILD RESISTANT SHUTTER SYSTEM"
Designed to inhibit access to the electricity supply, unless all 3 pins of a standard British 13A plug are in position

HIGH GLOSS, HIGH QUALITY THERMOSET MATERIAL
Inherent antimicrobial properties, resists scratching, maintains appearance

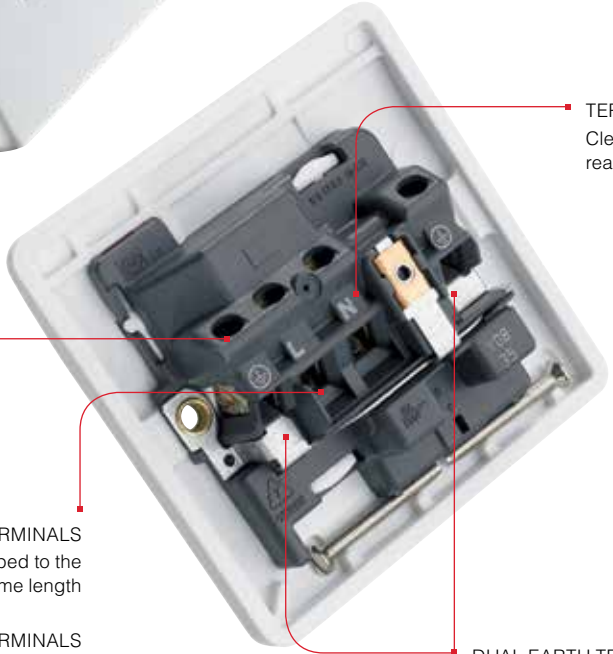

TERMINAL MARKINGS
Clearly marked on all rear mouldings

TERMINAL SCREWS
Backed out and held captive within the terminal housing

IN-LINE TERMINALS
Allow wire to be cut stripped to the same length

FUNNEL ENTRANCE TO TERMINALS
Terminals are upwards facing to make installation easier

DUAL EARTH TERMINALS
Available for installations that require high integrity earthing

Comprehensive range of Part M compliant products including socket outlets with outboard rockers, wide rocker switches and graphite coloured frontplates

Combined TV, FM, DAB, satellite and telephone sockets save on installation time and space

Simple but effective screwless cord grip on connection units – securely holds the cable

Logic Plus™

Specification Notes

The 3 pin operated safety shutter makes Logic Plus™ sockets the safest available.

Many sockets are fitted with two earth terminals to provide high integrity earthing.

Terminals are grouped in-line with terminal screws backed out ready for easy wiring. Clear marking on dark background makes the terminals easily identifiable.

Switchsocket Outlets

FLUSH
13 AMP

K2757GRA

K2757D1RED

K2757D1WHI

K2743WHI

K2747WHI

K2747D1WHI

K1000WHI

K2657WHI

K2657D1RED

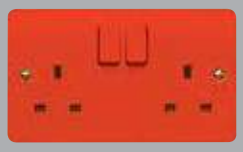

K2747D1RED

K1000BLK

K2647WHI

K2737WHI

K1000CLR

K2757WHI 10
K2757GRA 10
1 GANG DP
WITH DUAL EARTH TERMINALS

K2757D1RED 5
1 GANG DP
WITH RED FRONTPLATE, RED ROCKER AND DUAL EARTH TERMINALS

K2747WHI 50
2 GANG DP

K2657WHI 10
K2657GRA 10
1 GANG DP WITH NEON AND DUAL EARTH TERMINALS

K2657D1RED 5
1 GANG DP
WITH RED FRONTPLATE, RED ROCKER, NEON AND DUAL EARTH TERMINALS

K2647WHI 5
2 GANG DP WITH NEONS

MOUNTING BOXES
FLUSH 25MM
1 GANG: 861ZIC
2 GANG: 862ZIC
FLUSH 35MM
(for extra wiring space)
1 GANG: 866ZIC
2 GANG: 886ZIC
3 GANG: K863
SURFACE
1 GANG: K2140WHI
2 GANG: K2142WHI
3 GANG: K2153WHI

DIMENSIONS
1 GANG: 86 x 86mm
2 GANG: 86 x 146mm
3 GANG: 86 x 206mm
FIXING CENTRES
1 GANG: 60.3mm
2 GANG: 120.6mm
3 GANG: 180.9mm
BS 1363 Pt 2:1995

K2757D1WHI 10
1 GANG DP
WITH RED ROCKER AND DUAL EARTH TERMINALS

K2757D2WHI 10
1 GANG DP
WITH GREEN ROCKER AND DUAL EARTH TERMINALS

K2747D1WHI 5
2 GANG DP
WITH RED ROCKERS

K2747D1RED 5
2 GANG DP
WITH RED FRONTPLATE AND RED ROCKERS

K2737WHI 5
3 GANG DP
WITH DUAL EARTH TERMINALS

HIGH INTEGRITY EARTHING
K2757, K2657, K2743 and K2737
Fitted earth terminals to provide a double earth facility for use when installations require a high integrity protective connection as specified within BS 7671 IET Wiring Regulations
K2737
13A fuse protects all three outlets

K2743WHI 1
K2743GRA 1
2 GANG DP WITH 2 X USB CHARGING PORTS AND DUAL EARTH TERMINALS

K1000WHI 1
2 GANG 10MM
WHITE PATRESS

K1000BLK 1
2 GANG 10MM
BLACK PATRESS

K1000CLR 1
2 GANG 10MM
CLEAR PATRESS

MOUNTING BOXES
FLUSH 35MM
886ZIC
FLUSH 47MM
(for extra wiring space)
887ZIC
BS 5733:2010

K2743WHI
Features 2 USB charging sockets, each capable of supporting 2A charge (total of 2A)

K1000WHI, K1000BLK, K1000CLR
Pattresses for use where existing back box is too shallow

Logic Plus™

WITH OUTBOARD
ROCKERS
FLUSH
13 AMP

K2746WHI

K2746GRA

K2476WHI

K2476GRA

K2746D1WHI

K2746D1RED

K2746D2WHI

K2746WHI 10
K2746GRA 10
2 GANG DP
WITH OUTBOARD ROCKERS
AND DUAL EARTH TERMINALS

K2746CEWHI 10
2 GANG DP
WITH OUTBOARD ROCKERS
AND 'CLEAN EARTH' FACILITY

K2476WHI 10
K2476GRA 10
2 GANG DP
WITH OUTBOARD ROCKERS
DUAL EARTH AND NEONS

K2476CEWHI 10
2 GANG DP
WITH OUTBOARD ROCKERS,
NEONS AND 'CLEAN EARTH'
FACILITY

K2746CEWHI & K2476CEWHI
Provided with facility for 'clean earth' connection
DIMENSIONS
86 x 146mm
FIXING CENTRES
120.6mm
BS 1363 Pt 2:1995
HIGH INTEGRITY EARTHING
Fitted earth terminals to provide a double earth facility for use when installations require a high integrity protective connection as specified within BS 7671 IET Wiring Regulations

K2746D1WHI 10
K2746D1RED 10
2 GANG DP
WITH RED OUTBOARD
ROCKERSAND DUAL
EARTH TERMINALS

K2746CED1RED 10
2 GANG DP WITH RED
OUTBOARD ROCKERS
WITH CLEAN EARTH
FACILITY

K2476D1WHI 10
K2476D1RED 10
2 GANG DP
WITH RED OUTBOARD
ROCKERS, NEONS AND
DUAL EARTH TERMINALS

K2746D2WHI 10
2 GANG DP
WITH GREEN OUTBOARD
ROCKERS AND DUAL
EARTH TERMINALS

DIMENSIONS
86 x 146mm
FIXING CENTRES
120.6mm
BS 1363 Pt 2:1995

Logic Plus™

RCD PROTECTED FLUSH 13 AMP

K6231WHI

K6233WHI

K6300WHI

K6303WHI

FILTERED FLUSH 13 AMP

K1816WHI

K1826WHI

K1800WHI

K6231WHI 1
2 GANG SP
30mA RATED TRIPPING CURRENT
ACTIVE CONTROL CIRCUIT

K6233WHI 1
2 GANG SP
30mA RATED TRIPPING CURRENT
PASSIVE CONTROL CIRCUIT

MOUNTING BOXES
FLUSH
886ZIC – 35mm deep
SURFACE
K2140WHI – 30mm deep
EARTH PIN OPERATED SHUTTER
These a.c. and pulsating d.c. fault current sensitive products have up to 15mm thick frontplates and are suitable for boxes with 30mm min. depth and supply voltages of 240V 50Hz.
A 25mm deep box (862ZIC) can be used but conduit entry is restricted.
Refer to Sentrysocket section, page 288, for more information on active and passive control circuits.
DIMENSIONS
86 x 146mm
FIXING CENTRES
120.6mm
BS 7288:1990
All units are a.c. and pulsating d.c. fault current sensitive devices.
Maximum total load 13A

K6300WHI 1
1 GANG DP
30mA RATED TRIPPING CURRENT ACTIVE CONTROL CIRCUIT

K6303WHI 1
1 GANG DP
30mA RATED TRIPPING CURRENT PASSIVE CONTROL CIRCUIT

MOUNTING BOXES
FLUSH
886ZIC – 35mm deep
SURFACE
K2140WHI – 30mm deep
EARTH PIN OPERATED SHUTTER
These a.c. and pulsating d.c. fault current sensitive products have up to 15mm thick frontplates and are suitable for boxes with 30mm min. depth and supply voltages of 240V 50Hz.
A 25mm deep box (862ZIC) can be used but conduit entry is restricted.
Refer to Sentrysocket section, page 288, for more information on active and passive control circuits.
DIMENSIONS
86 x 146mm
FIXING CENTRES
120.6mm
BS 7288:1990
All units are a.c. and pulsating d.c. fault current sensitive devices.
Maximum total load 13A

K1816WHI 1
2 GANG DP
SPIKE

K1826WHI 1
2 GANG DP
SPIKE AND RFI

K1800WHI 5
REPLACEMENT FILTER CASSETTE

MOUNTING BOXES
FLUSH
886ZIC
SURFACE
K2172WHI
K1816
Provides filtering to reduce voltage spikes only.
K1826
Provides two way filtering to reduce voltage spikes and radio frequency interference on the mains. Protected by thermal cut-out.
BS 5733:2010

Multimedia Plates

FLUSH
13 AMP

K2741WHI

K2740WHI

K2741WHI 1
2 GANG DP
COMBINATION PLATE
WITH 4 X EURO APERTURE

K2740WHI 1
4 GANG DP
COMBINATION PLATE WITH
TV/FM/DAB/SAT X 2 QUAD,
TV, TELEPHONE AND
4 X EURO APERTURE

MOUNTING BOXES
FLUSH 35MM
2 GANG: 857ZIC*
4 GANG: 853ZIC*
FLUSH 47MM
2 GANG: 858ZIC*
4 GANG: 854ZIC*
DIMENSIONS
K2741: 173 x 146mm
K2740: 173 x 294mm
BS 1363 Pt 2:1995

*Provides segregation between power and TV/FM/SAT/DAB/ Euro Module sections

Switchsocket Outlets

NON STANDARD
FLUSH
13 AMP

K1257WHI

K1246WHI

K1257D1WHI

K1246D1WHI

K1257WHI 10
1 GANG DP
K1246WHI 5
2 GANG DP
K1257D1WHI 10
1 GANG DP
WITH RED ROCKER
K1246D1WHI 5
2 GANG DP
WITH RED ROCKERS
K1246D1RED 5
2 GANG DP
WITH RED FRONTPLATE
AND RED ROCKERS

MOUNTING BOXES
FLUSH 25MM
1 GANG: 861ZIC
2 GANG: 862ZIC
FLUSH 35MM (for extra wiring space)
1 GANG: 866ZIC. 2 GANG: 886ZIC
SURFACE
1 GANG: K2140WHI. 2 GANG: K2142WHI
These products are provided with facilities for 'clean earth' connection and are suitable for non standard plugs with 'T' shaped earth pin. See page 240.
DIMENSIONS
1 GANG: 86 x 86mm
2 GANG: 86 x 146mm
FIXING CENTRES
1 GANG: 60.3mm
2 GANG: 120.6mm
BS 1363 Pt 2:1995 where relevant

ROUND PIN
FLUSH

K2891WHI

K2893WHI

K2493WHI

K2891WHI 10
1 GANG
5A DP SHUTTERED
K2893WHI 10
1 GANG
15A DP SHUTTERED
K2493WHI 10
1 GANG
15A DP SHUTTERED
WITH NEON

MOUNTING BOXES
FLUSH
861ZIC (25mm)
866ZIC (35mm for extra wiring space)
SURFACE
K2140WHI
DIMENSIONS
86 x 86mm
FIXING CENTRES
60.3mm
BS 546:1950

Logic Plus™

Socket Outlets

FLUSH 13 AMP

K780WHI

K781WHI

K781RED

K780WHI 10
1 GANG

K781WHI 5
K781RED 5
2 GANG
WITH DUAL EARTH TERMINALS

MOUNTING BOXES
FLUSH 25MM
1 GANG: 861ZIC
2 GANG: 862ZIC
FLUSH 35MM
(for extra wiring space)
1 GANG: 866ZIC
2 GANG: 886ZIC
SURFACE
1 GANG: K2140WHI
2 GANG: K2142WHI
K781 is fitted with two earth terminals to provide a double earth facility for use when installations require a high integrity protective connection as specified within BS 7671 IET Wiring Regulations
DIMENSIONS
1 GANG: 86 x 86mm
2 GANG: 86 x 146mm
FIXING CENTRES
1 GANG: 60.3mm
2 GANG: 120.6mm
BS 1363: Pt2:1995

ROUND PIN FLUSH

K770WHI

K771WHI

K772WHI

K770WHI 10
1 GANG
2A SHUTTERED

K771WHI 10
1 GANG
5A SHUTTERED

K772WHI 10
1 GANG
15A SHUTTERED

MOUNTING BOXES
FLUSH
861ZIC (25mm)
866ZIC
(35mm for extra wiring space)
SURFACE
K2140WHI
DIMENSIONS
86 x 86mm
FIXING CENTRES
60.3mm
BS 546:1950

127V FLUSH 15 AMP (NON UK)

K2251WHI

K2252WHI

K2251WHI 10
1 GANG
SHUTTERED
(NON UK)

K2252WHI 5
2 GANG
SHUTTERED
(NON UK)

MOUNTING BOXES
FLUSH 25MM
1 GANG: 861ZIC
2 GANG: 862ZIC
FLUSH 35MM
(for extra wiring space)
1 GANG: 866ZIC
2 GANG: 886ZIC
SURFACE
1 GANG: K2140WHI
2 GANG: K2142WHI
DIMENSIONS
1 GANG: 86 x 86mm
2 GANG: 86 x 146mm
FIXING CENTRES
1 GANG: 60.3mm
2 GANG: 120.6mm
SASO 2204:2003

Logic Plus™

Socket Outlets

2P + E
FLUSH
16 AMP
(NON UK)

K4150WHI

K4152WHI

Three Pole Fan Isolator

FLUSH
10 AMP

K4857WHI

K4859WHI

K4858

K2000

Shaver Socket Outlet

K700WHI

Shaver/Toothbrush Supply Units

K701WHI

K706WHI

K4150WHI 10
1 GANG
16A 250V
SHUTTERED
(NON UK)

K4152WHI 5
2 GANG
16A 250V
SHUTTERED
(NON UK)

MOUNTING BOXES
FLUSH 35MM
1 GANG: 866ZIC
2 GANG: 886ZIC
SURFACE
1 GANG: K2031WHI
2 GANG: K2172WHI
These products are not suitable for installation in 25mm boxes.
DIMENSIONS
1 GANG: 86 x 86mm
2 GANG: 86 x 146mm
FIXING CENTRES
1 GANG: 60.3mm
2 GANG: 120.6mm
IEC 60884-1:2006

K4857WHI 1
WITH SWITCHLOCK
AND PADLOCK

K4859WHI 10
WITHOUT SWITCHLOCK

K4858 10
SWITCHLOCK
FOR FAN ISOLATOR

K2000 1
PADLOCK

MOUNTING BOXES
FLUSH
3995ZIC
SURFACE
K2160WHI
For local isolation of fans with or without timers for repair or routine maintenance.
DIMENSIONS
86 x 86mm
FIXING CENTRES
60.3mm
BS EN 60669-2-4

K700WHI 1
SHAVER SOCKET OUTLET
200-250 VOLTS 50/60HZ
FUSED
INCORPORATES A SELF-RESETTING OVERLOAD DEVICE, LIMITING CURRENT TO 20VA.

MOUNTING BOXES
FLUSH
861ZIC
SURFACE
K2140WHI
Must not be installed in a bathroom or shower room.
Designed for wiring onto lighting circuits.
DIMENSIONS
86 x 86mm
FIXING CENTRES
60.3mm
BS 4573:1970

K701WHI 1
SHAVER/TOOTHBRUSH
SUPPLY UNIT
DUAL VOLTAGE
115/230V OUTPUT
(220/240V 50/60HZ INPUT)

K706WHI 1
SHAVER/TOOTHBRUSH
SUPPLY UNIT
DUAL VOLTAGE
115/230V OUTPUT
(120/130V 50/60HZ INPUT)
(NON UK)

MOUNTING BOXES
FLUSH
878ZIC
SURFACE
K2172WHI
This design incorporates a double wound isolating transformer rated 20VA at 230 or 115 volts it meets BS EN 61558 making it safe for use in bathrooms. Insertion of a shaver/toothbrush plug automatically switches on by energising the primary side of the isolating transformer – removal automatically switches off. The transformer is protected against overload by an automatic solid state overload device with automatic resetting.
DIMENSIONS
146 x 86mm
FIXING CENTRES
120.6mm
BS EN 61558-2-5:1998

Logic Plus™

Features and Benefits

A screwless cord grip automatically clamps and securely holds the cable in connection units with base and front flex outlets

Switched units are double pole with neutral pole contacts 'making' before and 'breaking' after live contacts. Rockers with built-in indicators are available

When servicing or repairing appliances, fuse carriers remain attached to the frontplate when opened and can be padlocked for safety

An optional tamperproof screw on fuse carriers is particularly useful for appliances in public areas

In-line terminals, backed out captive terminal screws and clear marking make installation easy

Connection Units

SWITCHED
13 AMP

K330GRA

K370WHI

K370D1WHI

K1030WHI

K385WHI

K1040WHI

K1060WHI

K1060D1WHI

K1070WHI

K1070D1WHI

UNSWITCHED
13 AMP

K337WHI

K337KOWHI

K377WHI

K330WHI 10
K330GRA 10
DP WITH FLEX OUTLET IN BASE AND THICK FRONTPLATE

K370WHI 10
K370GRA 10
DP WITH NEON, FLEX OUTLET IN BASE AND THICK FRONTPLATE

K370D1WHI 10
DP WITH NEON, FLEX OUTLET IN BASE, THICK FRONTPLATE AND RED ROCKER

K1030WHI 10
DP WITH FRONT FLEX OUTLET

MOUNTING BOXES
K1030, K1040, K1060 and K1070
FLUSH
866ZIC (35mm)
SURFACE
K2031WHI
K330, K385 and K370
FLUSH
866ZIC (35mm)
SURFACE
K2140WHI

All units are fitted with a 13A fuse-link to BS 1362. See page 222 for spare fuse-links.

The fuse carrier can be locked in the open position by removing the fuse and using K2000 fuse carrier padlock

K385WHI 1
13A RCD CONNECTION UNIT 30mA PASSIVE AND THICK FRONTPLATE

K1040WHI 10
DP

K1040KOWHI 10
DP WITH TAMPERPROOF SCREW

K1060WHI 10
DP WITH NEON

K1060D1WHI 10
DP WITH NEON AND RED ROCKER

K1070WHI 10
DP WITH FRONT FLEX OUTLET AND NEON

K1070D1WHI 10
DP WITH FRONT FLEX OUTLET, NEON AND RED ROCKER

K2000 1
PADLOCK

K1030 and K1070 front flex outlet products cannot be mounted directly onto MI Cable Box K2131WHI. A mounting frame K2134WHI will have to be used between the product and the box.

Base entry frontplates are 12.5mm deep.

DIMENSIONS
86 x 86mm
FIXING CENTRES
60.3mm
BS 1363 Pt 4:1995

K337WHI 10
WITH FLEX OUTLET IN BASE AND THICK FRONTPLATE

K337KOWHI 10
WITH FLEX OUTLET IN BASE, THICK FRONTPLATE AND TAMPERPROOF SCREW FOR FUSE CARRIER

K377WHI 10
WITH FLEX OUTLET IN BASE, NEON AND THICK FRONTPLATE

MOUNTING BOXES:
FLUSH
866ZIC (35mm)
SURFACE
K2140WHI

All units are fitted with a 13A fuse-link to BS 1362. See page 222 for spare fuse-links.

Base entry frontplates are 12.5mm deep.

The fuse carrier can be locked in the open position by removing the fuse and using K2000 fuse carrier padlock.

DIMENSIONS
86 x 86mm
FIXING CENTRES
60.3mm
BS 1363 Pt 4:1995
K1040KO AND K337KO
Key (3405ZIC) is supplied

Logic Plus™

Dual Switch

FLUSH
20 AMP

K5208WHI

K5207WHI

K5208WHI 10
K5207WHI 10
WITH NEON

FOR CONTROLLING DUAL IMMERSION HEATERS
MOUNTING BOXES
FLUSH
866ZIC (35mm)
SURFACE:
K2140WHI
Only mounting boxes with an earth terminal should be used.
These products are marked 'on' and 'off' against the one-way DP switch and 'sink' and 'bath' against the two-way SP switch.
DIMENSIONS
86 x 86mm
FIXING CENTRES
60.3mm
BS EN 60669-1:1999

DP Switches

FLUSH
20 AMP

K5403WHI

K5423WHI

K5423WHWHI

K5423D1WHI

K5403WHI 10
WITH FLEX OUTLET IN BASE
K5423WHI 10
WITH FLEX OUTLET IN BASE AND NEON
K5423WHWHI 10
WITH FLEX OUTLET IN BASE, NEON AND MARKED 'WATER HEATER'.
K5423D1WHI 10
WITH FLEX OUTLET IN BASE, NEON AND RED ROCKER

MOUNTING BOXES:
FLUSH
866ZIC (35mm)
SURFACE
K2140WHI
K2031WHI (for extra wiring space)
Base entry frontplates are 12.5mm deep.
All switches are complete with earth terminals.
Not recommended for switching large banks of PCs.
DIMENSIONS
86 x 86mm
FIXING CENTRES
60.3mm
BS EN 60669-1:1999

FLUSH
32 AMP

K5105WHI

K5105WHI 1
WITH NEON
K5105GRA 1
WITH NEON

MOUNTING BOXES:
FLUSH
866ZIC (6mm² conductors)
877ZIC (10mm² conductors)
SURFACE
K2140WHI (6mm² conductors)
K2031WHI (10mm² conductors)
Supplied with 8 self-adhesive plastic identification labels marked hob, fan, oven, water heater, shower, air conditioner, cooker and washing machine.
Not recommended for switching large banks of PCs.
DIMENSIONS
86 x 86mm
FIXING CENTRES
60.3mm
BS EN 60669-1:1999

MOULDED
FLUSH
50 AMP

K5205WHI

K5215CKWHI

K5205WHI 1
K5215WHI 1
WITH NEON
K5215CKWHI 1
WITH NEON
AND MARKED 'COOKER'
K5215SHWHI 1
WITH NEON
AND MARKED 'SHOWER'

MOUNTING BOXES:
FLUSH
886ZIC (6mm² conductors)
878ZIC (10mm² conductors)
SURFACE
K2172WHI
K5205WHI and **K5215WHI**
Supplied with 8 self-adhesive plastic identification labels marked hob, fan, oven, water heater, shower, air conditioner, cooker and washing machine.
Not recommended for switching large banks of PCs.
DIMENSIONS
86 x 146mm
FIXING CENTRES
120.6mm
BS EN 60669-1:1999

METAL
50 AMP

K5230WHI

K5012WHI

K5230WHI 1
WITH NEON
SURFACE MOUNTED
K5012WHI 1
WITH NEON
FLUSH MOUNTED

K5230
Supplied with mounting box.
Earth terminal fitted on base of box.
Not recommended for switching large banks of PCs.
DIMENSIONS
150 x 89 x 50mm
KNOCKOUTS
8 x 20mm
K5012
Not supplied with mounting box.
FLUSH
5120ALM
Supplied with earth terminals.
Not recommended for switching large banks of PCs.
DIMENSIONS
178 x 165mm
BS EN 60669-1:1999

Logic Plus™

Cooker Connection Unit

45 AMP

K5045WHI

Cooker Controls

MOULDED FLUSH
45 AMP

K5060WHI

K5061WHI

MOULDED SURFACE
45 AMP

K5040WHI

K5041WHI

METAL FLUSH
45 AMP

K5011WHI

METAL SURFACE
45 AMP

K5001WHI

K5045WHI 10

MOUNTING BOX
FLUSH
877ZIC (46mm)
Supplied complete with terminal block, each terminal of which will accommodate up to two 10mm² conductors.
Moulded cover plate, cable clamp included.
DIMENSIONS
86 x 86mm
FIXING CENTRES
60.3mm
BS EN 60670-22:2006

K5060WHI 1
45A DP MAIN SWITCH AND 13A SWITCHSOCKET OUTLET

K5061WHI 1
45A DP MAIN SWITCH AND 13A SWITCHSOCKET OUTLET WITH NEONS

MOUNTING BOXES
FLUSH
886ZIC (6mm² conductors)
878ZIC (10mm² conductors)
Rotary operated shutter.
DIMENSIONS
86 x 146mm
FIXING CENTRES
120.6mm
BS 4177:1992

K5040WHI 1
45A DP MAIN SWITCH AND 13A SWITCHSOCKET OUTLET

K5041WHI 1
45A DP MAIN SWITCH AND 13A SWITCHSOCKET OUTLET WITH NEONS

Supplied complete with mounting box and cable restraint.
Fitted with earth terminals.
Rotary operated shutter.
DIMENSIONS
86 x 146 x 60mm
BS 4177:1992

K5011WHI 1
45A DP MAIN SWITCH AND 13A SWITCHSOCKET OUTLET WITH NEONS

MOUNTING BOX
FLUSH
5120ALM
Fitted with earth terminals.
Rotary operated shutter.
DIMENSIONS
178 x 165mm
BS 4177:1992

K5001WHI 1
45A DP MAIN SWITCH AND 13A SWITCHSOCKET OUTLET WITH NEONS

Supplied complete with mounting box.
Fitted with earth terminals.
Rotary operated shutter.
DIMENSIONS
156 x 144 x 67mm
KNOCKOUTS
5 x 25mm.
Two in each of top and bottom, one in back.
BS 4177:1992

Plateswitches

NEON LOCATOR

Neon locator on a plateswitch

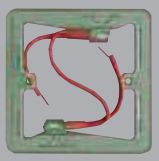
K3041

FLUSH
10 AMP

K4870GRA

K4871WHI

K4872WHI

K4872GRA

FLUSH
10 AMP

K4875WHI

K4873WHI

K4874WHI

K4879WHI

FLUSH
20 AMP

K4870D2WHI

K4871D2WHI

K4872D2WHI

K4873D2WHI

FLUSH
10 AMP

K4878BWHI

K4878PWHI

K3041 5
NEON PLATESWITCH LOCATOR
200-250V. 50HZ.
TUNGSTEN GLS LAMPS ONLY

Neon Plateswitch Locator is for use with any 1, 2 and 3 GANG Logic Plus™ plateswitches.
Used for location of switches in dark situations.
FIXING CENTRES
60.3mm
BS 5733:2010

K4870WHI 10
K4870GRA 10
1 GANG SP
ONE-WAY
K4871WHI 10
K4871GRA 10
1 GANG SP
TWO-WAY
K4872WHI 10
K4872GRA 10
2 GANG SP
TWO-WAY

MOUNTING BOXES
FLUSH
1, 2 & 3 GANG: 861ZIC
4 & 6 GANG: 862ZIC
SURFACE
1, 2 & 3 GANG: K2160WHI
4 & 6 GANG: K2161WHI
These switches do not have to be derated when used with fluorescent or inductive loads.
K4871, K4872, K4873, K4874, K4879
These switches can be wired as either one-way or two-way.

K4875WHI 10
1 GANG
INTERMEDIATE
K4876WHI 10
1 GANG DP
ONE-WAY
K4873WHI 10
3 GANG SP
TWO-WAY
K4874WHI 5
4 GANG SP
TWO-WAY
K4879WHI 5
6 GANG SP
TWO-WAY

DIMENSIONS
1, 2 & 3 GANG: 86 x 86mm
4 & 6 GANG: 86 x 146mm
FIXING CENTRES
1, 2 & 3 GANG: 60.3mm
4 & 6 GANG: 120.6mm
BS EN 60669-1:1999

K4870D2WHI 10
1 GANG SP
ONE-WAY
K4871D2WHI 10
1 GANG SP
TWO-WAY
K4872D2WHI 10
2 GANG SP
TWO-WAY
K4873D2WHI 10
3 GANG SP
TWO-WAY
K4874D2WHI 5
4 GANG SP
TWO-WAY
K4875D2WHI 10
1 GANG INTERMEDIATE

MOUNTING BOXES
FLUSH
861ZIC
SURFACE
K2160WHI
DIMENSIONS
86 x 86mm
FIXING CENTRES
60.3mm

K4878BWHI
10
1 GANG SP
TWO WAY
PUSH SWITCH WITH BELL SYMBOL
PUSH TO MAKE OR BREAK
K4878PWHI
10
1 GANG SP
TWO WAY
PUSH SWITCH MARKED 'PRESS'
PUSH TO MAKE OR BREAK

MOUNTING BOXES
FLUSH
861ZIC
SURFACE
K2160WHI
DIMENSIONS
86 x 86mm
FIXING CENTRES
60.3mm
BS EN 60669-1:1999

Logic Plus™

Plateswitches

DP FLUSH
20 AMP

K4867WHI

K4868WHI

K4867WHI 10
1 GANG DP

K4868WHI 10
2 GANG DP

MOUNTING BOXES
866ZIC
DIMENSIONS
86 x 86mm
FIXING CENTRES
60.3mm
BS EN 60669-1:1999

Lockable Fire Alarm Isolator Switch

DP FLUSH
20 AMP

K4780WHI

K4780WHI 1
20A DP LOCKABLE FIRE
ALARM ISOLATOR SWITCH

MOUNTING BOXES
866ZIC
DIMENSIONS
86 x 86mm
FIXING CENTRES
60.3mm
BS 60669-2-4:2005

Architrave Switches

FLUSH
10 AMP

K4841WHI

K4842WHI

K4848BWHI

K4848PWHI

K4841WHI 5
1 GANG SP
TWO-WAY

K4842WHI 5
2 GANG SP
TWO-WAY

K4848BWHI 5
1 GANG SP PUSH SWITCH
WITH BELL SYMBOL
PUSH TO MAKE OR BREAK

K4848PWHI 5
1 GANG SP PUSH SWITCH
MARKED 'PRESS'
PUSH TO MAKE OR BREAK

MOUNTING BOXES
FLUSH
1 GANG: 3921ZIC
2 GANG: 3922ZIC
SURFACE
1 GANG: k2151WHI
2 GANG: k2152WHI
These switches do not have to be derated when used with fluorescent or inductive loads.
K4841, K4842 These switches can be wired as either one-way or two-way.
DIMENSIONS
1 GANG: 86 x 32mm;
2 GANG: 146 x 32mm
FIXING CENTRES
1 GANG: 60.3mm;
2 GANG: 120.6mm
BS EN 60669-1:1999

Wide Rocker Switches

FLUSH
10 AMP

K4781GRA

K4782GRA

K4783WHI

K4785WHI

K4781WHI 10
K4781GRA 10
1 GANG SP TWO-WAY
WITH WIDE ROCKER

K4782WHI 10
K4782GRA 10
2 GANG SP TWO-WAY
WITH WIDE ROCKERS

K4783WHI 10
3 GANG SP TWO-WAY
WITH WIDE ROCKERS

K4785WHI 10
K4785GRA 10
1 GANG SP INTERMEDIATE
WITH WIDE ROCKER

K4787WHI 10
1G 20A DP ONE-WAY
WITH WIDE ROCKER

K4788WHI 10
2 GANG DP WITH
WIDE ROCKER

MOUNTING BOXES
FLUSH
861ZIC
SURFACE
K2160WHI
K2140WHI (for extra wiring space)
These switches do not have to be derated when used with fluorescent or inductive loads.

DIMENSIONS
86 x 86mm
FIXING CENTRES
60.3mm
BS EN 60669-1:1999
20A DP VERSIONS
K4787WHI is 20A DP 1 way version of K4781.
BS EN 60669-1: 1999
K4788WHI is 20A DP 1 way version of K4782.
BS EN 60669-1:1999

Logic Plus™

Intelligent LED Dimmer Switch

220V TO 240V A.C. 50HZ
LED, TUNGSTEN FILAMENT
AND LOW VOLTAGE
HALOGEN LIGHTING

Intelligent Dimmer Switches

230V A.C. 50HZ
TUNGSTEN FILAMENT
AND LOW VOLTAGE
HALOGEN LIGHTING

Standard Dimmer Switches

230V A.C. 50HZ
TUNGSTEN FILAMENT

Dimmer Switches

(NON UK)

200-250V A.C.
50 OR 60HZ

K1523WHILV

K1524WHILV

K1501WHILV

K1521WHILV

K1522WHILV

K1511WHI

K1531WHI

K1532WHI

K1533WHI

K1541WHI

K1561WHI

K1661WHI

4053PLWHIT9

K1523WHILV 1
1 GANG SINGLE
2 WAY
40W/VA - 300W/240VA
LED: 4-70W

K1524WHILV 1
1 GANG DOUBLE
2 WAY
40W/VA - 300W/240VA
LED: 4-70W

MOUNTING BOXES
FLUSH
861ZIC – 25mm deep min
SURFACE
K2140WHI – 30mm deep
Micro controller based circuitry to provide electronic soft-start and overload protection. Suitable for use with most major manufacturers LED lamps or electronic / wire wound transformers. Can also be used with good quality mains voltage GU10 halogen lamps.
Do not mix load types
This dimmer offers the user the ability to adjust the minimum brightness level.
Max number of lamps (10)
DIMENSIONS
86 x 86mm
FIXING CENTRES
60.3mm
BS EN 60669-2-1

K1501WHILV 1
1 GANG SINGLE
TWO WAY 60W/VA-500W/400 VA

K1521WHILV 1
1 GANG SINGLE
TWO WAY 40W/VA-300W/240 VA

K1522WHILV 1
1 GANG DOUBLE
TWO WAY 2 X 40W/VA-300W/240 VA

FLUSH
861ZIC/866ZIC
SURFACE
K2140WHI
Micro controller based circuitry to provide electronic soft-start and overload protection. Suitable for use with good quality electronic or wire wound transformers. Can also be used with good quality mains voltage halogen lamps incorporating GU10 bases. Please check with lamp manufacturer to determine suitability.
DIMENSIONS
86 x 86mm
FIXING CENTRES
60.3mm
Conforms to BS EN 60669-2-1

K1511WHI 1
1 GANG SINGLE
ONE WAY 65-450W

K1531WHI 1
1 GANG SINGLE
ONE WAY 40-250W

K1532WHI 1
1 GANG DOUBLE
ONE WAY 2 X 40-250W

K1533WHI 1
1 GANG DOUBLE
TWO WAY 2 X 40-250W

K1534WHI 1
1 GANG SINGLE
TWO WAY 40-250W

K1535WHI 1
1 GANG SINGLE
TWO WAY 65-450W

MOUNTING BOXES
FLUSH
861ZIC/866ZIC
SURFACE
K2140WHI
Not suitable for fluorescent lamps or low voltage lighting.
DIMENSIONS
86 x 86mm
FIXING CENTRES
60.3mm
Conforms to BS EN 60669-2-1

K1541WHI 1
1 GANG SINGLE
ONE WAY
75-500W 50HZ

K1561WHI 1
1 GANG SINGLE
TWO WAY
100-1000W 50HZ

K1641WHI 1
1 GANG SINGLE
ONE WAY
75-500W 60HZ

K1661WHI 1
1 GANG SINGLE
TWO WAY
100-1000W 60HZ

MOUNTING BOXES
FLUSH
861ZIC/866ZIC
SURFACE
K2140WHI
PATTRESS
For mounting in 16mm deep boxes a mounting frame 40533PLWHIT9 is available.
DIMENSIONS
86 x 86mm
FIXING CENTRES
60.3mm

40533PLWHIT9 1
CAN BE USED WITH LOGIC PLUS DIMMERS TO STAND PRODUCT FROM MOUNTING SURFACE WHERE BACK BOX DEPTH IS NOT SUFFICIENT

DIMENSIONS
86 x 86mm
Patress thickness is 5mm
FIXING CENTRES
60.3mm

Logic Plus™

Blank Plates

Flex Outlet Frontplate

20 AMP

Euro Modular Frontplates

Euro Power Modules

K3825WHI K3827WHI

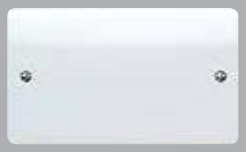
K3828WHI

K5033WHI

K1090WHI

K181WHI

K182WHI

K184WHI

K5830WHI

K5831WHI

K5832WHI

K5833WHI

K5834WHI

K5837WHI

K3825WHI 10
1 GANG MOULDED
ARCHITRAVE

K3827WHI 10
1 GANG MOULDED

K3828WHI 10
2 GANG MOULDED

K5033WHI 1
METAL

K3825WHI
For use with 3921ZIC and K2151WHI MOUNTING BOXES.
K5033WHI
For use with 5120ALM deep metal box.
DIMENSIONS
K3825WHI: 86 x 31mm
K3827WHI: 86 x 86mm
K3828WHI: 86 x 146mm
K5033WHI: 178 x 165mm
FIXING CENTRES
K3825WHI: 60.3mm
K3827WHI: 60.3mm
K3828WHI: 120.6mm
K5033WHI: 133mm
BS 5733:2010

K1090WHI 10
FLEX OUTLET FRONTPLATE
UNFUSED

Complete with three pairs of terminals, each suitable for 2 x 2.5mm² conductors and a 1.5mm² flexible cord.
A cord-grip is also fitted.
Frontplate thickness is 12.5mm.
Cable entry diameter is 11mm.
DIMENSIONS
86 x 86mm
FIXING CENTRES
60.3mm
BS EN 60670-22:2006

K181WHI 10
1 GANG EURO FRONTPLATE
ONE MODULE
APERTURE SIZE 25 X 50MM

K182WHI 10
K182GRA 10
1 GANG EURO FRONTPLATE
TWO MODULE
APERTURE SIZE 50 X 50MM

K184WHI 10
K184GRA 10
2 GANG EURO FRONTPLATE
FOUR MODULE
APERTURE SIZE 100 X 50MM

K185WHI 10
3 GANG EURO FRONTPLATE
SIX MODULE
APERTURE SIZE 150 X 50MM

MOUNTING BOXES
Suitable for flush boxes to BS 4662:2006 and surface boxes to BS 5733:2010 Refer to appropriate module for minimum box depth.
K185WHI MOUNTING BOX
35mm VTS8035 (For use with Pinnacle and Premier cable management systems) K2153WHI 30mm
FIXING CENTRES
1 GANG: 60.3mm 2 GANG: 120.6mm
BS 5733:2010 where applicable
Note: No grid required, modules just clip into place

K5830WHI 1
K5830BLK 1
UK 1 GANG EURO 2 MODULE
13A 250V SHUTTERED

K5831WHI 10
K5831BLK 10
GERMAN 2P+E
16A 250V SHUTTERED
EURO 2 MODULE (NON UK)

K5832WHI 10
K5832BLK 10
AMERICAN 2P+E
15A 127V SHUTTERED
EURO 2 MODULE (NON UK)

K5830
MOUNTING BOX
35mm minimum
46mm (for extra wiring space)
DIMENSIONS
50 x 50mm
BS 1363 Pt2:1995
K5831
MOUNTING BOX
46mm
DIMENSIONS
50 x 50mm
IEC 60884-1:2006
K5832
MOUNTING BOX
35mm
46mm (for extra wiring space)
DIMENSIONS
50 x 50mm
SASO 2204:2003

K5833WHI 10
K5833BLK 10
UK 1 GANG EURO 2 MODULE
5A 250V SHUTTERED

K5834WHI 10
K5834BLK 10
FRENCH/BELGIAN 2P+E
16A 250V SHUTTERED
EURO 2 MODULE (NON UK)

K5837WHI 1
K5837BLK 1
USB CHARGING MODULE
EURO 2 MODULE

K5833
MOUNTING BOX
35mm minimum
46mm (for extra wiring space)
DIMENSIONS
50 x 50mm
BS 546:1950
K5834
MOUNTING BOX
46mm
DIMENSIONS
50 x 50mm
NF C61-314
K5837
MOUNTING BOX
35mm, 46mm (for extra wiring space)
DIMENSIONS
50 x 50mm
USB charging sockets, each capable of supporting 2A charge (total of 2A).
IEC 60950-1
IEC 61000-6-1/3

Euro Datacom Modules

RJ11/12

K5887WHI

K5887BLK

RJ45 CAT 6

K5846WHI

K5846SBLK

K5864WHI

RJ45 CAT 5e

K5844WHI

K5845WHI

K5845BLK

TELEPHONE

K5820WHI

K5821WHI

K5821BLK

K5887WHI 5
K5887BLK 5
RJ11/12
ONE MODULE 25 X 50MM

Suitable for both RJ11 and RJ12 jacks
RJ11: 4 wire
RJ12: 6 wire
MOUNTING BOXES
Minimum box depth 25mm
FCC68
EN 41003

K5846WHI 5
K5846BLK 5
RJ45 CAT 6
ONE MODULE 25 X 50MM
K5846SWHI 5
K5846SBLK 5
RJ45 CAT 6 SCREENED
ONE MODULE 25 X 50MM
K5864WHI 5
RJ45 CAT 6 ANGLED
ONE MODULE 25 X 50MM

Cat 6 performance.
Suitable for both 568A and 568B wiring schemes.
MOUNTING BOXES
Minimum Box Depth 35mm
ISO/IEC 11801
EN 50173
TIA 568
EN 41003

K5844WHI 5
RJ45 CAT 5e ANGLED
ONE MODULE 25 X 50MM
K5845WHI 5
K5845BLK 5
RJ45 CAT 5e
ONE MODULE 25 X 50MM

Enhanced Cat 5 performance.
Suitable for both 568A and 568B wiring schemes.
Supplied with cable tie and cable anchors to secure wires in the connectors.
MOUNTING BOXES
Minimum box depth
25mm standard
ISO/IEC 11801
EN 50173
TIA 568
EN 41003

K5820WHI 5
K5820BLK 5
TELEPHONE MASTER
ONE MODULE 25 X 50MM
K5821WHI 5
K5821BLK 5
TELEPHONE SECONDARY
ONE MODULE 25 X 50MM

MOUNTING BOXES
Minimum depth 25mm
BS 6312 Pt 2

Mains operated products and extra low voltage modules must not be installed within the same frontplate.
Refer to BS 7671 IET Wiring Regulations for details.

Logic Plus™

Euro Multimedia Modules

TV CO-AXIAL OUTLETS FOR DIGITAL TV SCREENED NON ISOLATED

HDMI

AUDIO

K5850WHI K5850BLK

K5851WHI K5851BLK

K5855WHI K5855BLK

K5852WHI

K5852DABWHI

K5853WHI

K5853DABWHI

K5854DABWHI

K5807WHI

K5805WHI

K5806WHI

K5850WHI 5
K5850BLK 5
SINGLE OUTLET (IEC MALE)
ONE MODULE 25 X 50MM

K5851WHI 5
K5851BLK 5
SINGLE OUTLET
(IEC FEMALE)
ONE MODULE 25 X 50MM

K5855WHI 5
K5855BLK 5
SINGLE F-TYPE SATELLITE SOCKET
ONE MODULE 25 X 50MM

Fully screened non isolated TV outlets containing a combination of single, TV/FM Diplexer and TV/FM/SAT Triplexer for use within digital TV systems and interactive TV services. Single outlets for connection to a single TV, FM or Satellite co-axial aerial lead.

K5852WHI 5
K5852BLK 5
TWIN OUTLET
TV/FM DIPLEXER
TWO MODULE 50 X 50MM
(IRELAND ONLY)

K5852DABWHI 5
K5852DABBLK 5
TWIN OUTLET TV-FM/DAB DIPLEXER
TWO MODULE 50 X 50MM

K5853WHI 5
K5853BLK 5
TRIPLE OUTLET
TV/FM/SATELLITE TRIPLEXER
TWO MODULE 50 X 50MM
(IRELAND ONLY)

TV/FM diplexer units for connection to a single co-axial aerial lead with combined TV and FM signals.
TV/FM/SAT triplexer units for connection to a single co-axial aerial lead with combined TV, FM and Satellite signals

K5853DABWHI 5
K5853DABBLK 5
TRIPLE OUTLET
TV-FM/DAB-SAT TRIPLEXER
TWO MODULE 50 X 50MM

K5854DABWHI 5
K5854DABBLK 5
QUAD OUTLET
TV-FM/DAB-2XSAT
TWO MODULE 50 X 50MM

K5807WHI 5
K5807BLK 5
FEMALE HDMI OUTLET

K5807 Female HDMI Outlet is HDMI 1.1, 1.2, 1.3 and 1.4 compatible, HDCP compliant.

DATA RATE
Up to 2.25 Gbps
SCAN
Up to 1080p/1920x1200
INPUT CONNECTOR
1 x HDMI Female (Type A)
OUTPUT CONNECTOR
1 x HDMI Female (Type A)
Supports high resolution input
PC
VGA, SVGA, SXVGA (1280x1024) and UXGA (1600x1200, 1920x1200)
HDTV
480p, 720p, 1080i and 1080p
HDMI input cable should be no larger than 20m.
DIMENSIONS
50 x 50 x 20mm

K5805WHI 5
K5805BLK 5
AUDIO BINDING POST SET FOR SINGLE LOUD SPEAKER

K5806WHI 5
K5806BLK 5
RCA TO SCREW TERMINATION SET
1 RED AND 1 BLACK

DIMENSIONS
50 x 25 x 28mm

These products are fully compatible with Labgear TV distribution systems and are approved for use in "Sky Homes" and "Homes On" specifications

MOUNTING BOXES
Min box depth 32mm
DIMENSIONS
1 Module 25 x 50mm
2 Module 50 x 50mm
BS 3041:1997
IEC 169-2:1965
BS EN 50083 & BS 5733:2010 where applicable

PERFORMANCE
SINGLE OUTLETS
TV/FM Iec Male Or Female
DC-950MHz
SAT F-TYPE
DC-1.75GHz

TV/FM/SAT PRODUCTS

Outlet:	Diplexer
TV:	5-65MHz 470-862MHz
FM/DAB:	87.5-108MHz
SAT:	N/A
Outlet:	Triplexer
TV:	5-65MHz 470-862MHz
FM:	87.5-108MHz
SAT1:	950-2300MHz

TV/FM/DAB/SAT PRODUCTS FOR DIGITAL RADIO

Outlet:	Diplexer
TV:	5-65MHz 470-862MHz
FM/DAB:	87.5-230MHz
SAT OR SAT1:	N/A
SAT2:	
Outlet:	Triplexer
TV:	5-65MHz 470-862MHz
FM:	87.5-230MHz
SAT1:	950-2300MHz
SAT2:	5-2300MHz

Logic Plus™

LJU6C Datacom Frontplates

LJU6C Datacom Modules

BLANKS | | RJ11/12 | RJ45 CAT 6 | RJ45 CAT 5e | BLANKS

K180WHI

K188WHI

K188BLK

K186WHI

K186BLK

K172WHI

K5787WHI

K5746WHI

K5746BLK

K5746SWHI

K5746SBLK

K5745WHI

K5745BLK

K170WHI

K170BLK

K180WHI 10
TWO MODULE
BLANK 50 X 50MM

K188WHI 10
K188BLK 10
ONE MODULE
BLANK 25 X 50MM

K186WHI 10
K186BLK 10
HALF MODULE
BLANK 12.5 X 50MM

BS 5733:2010 where applicable

K172WHI 10
1 GANG TWIN
LJU6C FRONTPLATE
TWO MODULE
APERTURE SIZE
22 X 37MM

MOUNTING BOXES
suitable for flush boxes to BS 4662:2006 and surface boxes to BS 5733:2010
Refer to appropriate module for minimum box depth.
FIXING CENTRES
1 GANG: 60.3mm
2 GANG: 120.6mm
BS 5733:2010 where applicable
Note: No grid required, modules just clip into place.

K5787WHI 5
RJ11/12
ONE MODULE

Suitable for both RJ11 and RJ12 jacks.
RJ11: 4 wire
RJ12: 6 wire
MOUNTING BOXES
Minimum box depth 25mm
FCC68
EN41003

K5746WHI 5
K5746BLK 5
RJ45 CAT 6
ONE MODULE

K5746SWHI 5
K5746SBLK 5
RJ45 CAT 6
SCREENED
ONE MODULE

Cat 6 performance.
Suitable for both 568A and 568B wiring schemes.
MOUNTING BOXES
Minimum Box Depth 35mm
ISO/IEC 11801
EN 50173
TIA 568
EN 41003

K5745WHI 5
K5745BLK 5
RJ45 CAT 5e
ONE MODULE

Enhanced Cat 5 performance.
Suitable for both 568A and 568B wiring schemes.
MOUNTING BOXES
Minimum box depth 25mm
ISO/IEC 11801
EN 50173
TIA 568
EN 41003

K170WHI 10
K170BLK 10
ONE MODULE BLANK

BS 5733:2010 where applicable

Logic Plus™

Telephone Socket Outlets

FLUSH

TV/FM and Satellite Co-Axial Socket Outlets

FOR DIGITAL AND INTERACTIVE SERVICES
SCREENED, NON ISOLATED
FLUSH

K422WHI

K427WHI

K4817WHI

K3540WHI

K3550WHI

K3551WHI

K3555WHI

K3552WHI

K3552DABWHI

K3553WHI

K3553DABWHI

K3554DABWHI

K422WHI 10
1 GANG
TELEPHONE MASTER

K427WHI 10
1 GANG
TELEPHONE SECONDARY

K4817WHI 10
1 GANG
RJ11 TELEPHONE SOCKET

K3540WHI 10
3 PIN WITH
TELEPHONE SYMBOL
(NON UK)

400NAT 10
IDC INSERTION TOOL

BS 6312 Pt 2
K4817 FCC 68
K3540
Accepts standard BS 546
2A 2 pin and earth plug where 2 pins are used for telephone circuits and the earth pin is used to ensure correct polarity.
BS 546:1950 where applicable

K3550WHI 1
SINGLE OUTLET
(IEC MALE)

K3551WHI 5
SINGLE OUTLET
(IEC FEMALE)

K3555WHI 1
SINGLE OUTLET
F-TYPE SATELLITE SOCKET

K3552WHI 5
TWIN TV/FM
DIPLEXER

Fully screened non isolated TV outlets containing a combination of single, TV/FM Diplexer, TV/FM/SAT Triplexer and secondary telephone outlets for use within digital TV systems and interactive TV services.

K3552DABWHI 1
TWIN TV/FM
DAB DIPLEXER

K3553WHI 5
TRIPLE TV/FM/SAT
TRIPLEXER

K3553DABWHI 1
TRIPLE TV/FM DAB/SAT
TRIPLEXER

K3554DABWHI 1
QUAD TV/FM DAB/SATX2
QUADPLEXER

Single outlets for connection to a single TV, FM or Satellite co-axial aerial lead. TV/FM diplexer units for connection to a single co-axial aerial lead with combined TV and FM signals.

MOUNTING BOXES
Minimum box depth 32mm

1 GANG:	Flush:	866ZIC
	Surface:	K2181WHI
2 GANG:	Flush:	886ZIC
	Surface:	K2183WHI

DIMENSIONS

1 GANG:	86 x 86mm
2 GANG:	86 x 146mm

FIXING CENTRES

1 GANG:	60.3mm
2 GANG:	120.6mm

PERFORMANCE
Refer to page 474 for technical specification.

DAB PRODUCTS ARE NOT AVAILABLE IN IRELAND

TV/FM and Satellite Co-Axial Socket Outlets with Telephone Outlet

FOR DIGITAL AND INTERACTIVE TV SERVICES
FLUSH

K3557WHI

K3561WHI

K3560DABWHI

K3561DABWHI

K3562WHI

K3563WHI

K3563DABWHI

K3564DABWHI

K3565DABWHI

K3566DABWHI

K3557WHI 1
SINGLE OUTLET
(IEC MALE)
WITH TELEPHONE
SECONDARY

K3561WHI 5
TRIPLE TV/FM/SAT
TRIPLEXER
WITH TELEPHONE
SECONDARY

Single outlets for connection to a single TV, FM or Satellite co-axial aerial lead.
TV/FM diplexer units for connection to a single co-axial aerial lead with combined TV and FM signals.

K3560DABWHI 1
TWIN TV/FM DAB DIPLEXER
WITH TELEPHONE SECONDARY

K3561DABWHI 1
TRIPLE TV/FM DAB/SAT TRIPLEXER
WITH TELEPHONE SECONDARY

K3562WHI 5
TWIN TV/FM DIPLEXER
WITH SINGLE TV (IEC MALE)
AND TELEPHONE SECONDARY

K3563WHI 5
TRIPLE TV/FM/SAT TRIPLEXER
WITH SINGLE TV (IEC MALE)
AND TELEPHONE SECONDARY

Telephone Secondary outlet for use with interactive TV digital services.
K3562 and **K3563** outlets with additional single TV (male) outlet for secondary distribution of TV signal

K3563DABWHI 1
TRIPLE TV/FM/DAB/SAT TRIPLEXER
WITH SINGLE TV (IEC MALE)
AND TELEPHONE SECONDARY

K3564DABWHI 1
QUAD TV/FM DAB/SATX2 QUADPLEXER
WITH TELEPHONE SECONDARY

K3565DABWHI 1
QUADPLEXER + RJ45
AND TELEPHONE SECONDARY

K3566DABWHI 1
QUADPLEXER
WITH TELEPHONE SECONDARY
AND SINGLE TV (IEC MALE)

Logic Plus™

TV/FM and Satellite Co-Axial Socket Outlets

NON ISOLATED FLUSH

K3520WHI

K3523WHI

K3525WHI

K3525D1WHI

ISOLATED FLUSH

K3521WHI

K3522WHI

K3520WHI 10
SINGLE OUTLET

K3523WHI 10
TWIN OUTLET

K3525WHI 10
SINGLE F TYPE SATELLITE SOCKET

K3525D1WHI 10
TWIN F TYPE SATELLITE SOCKET

MOUNTING BOXES
FLUSH
861ZIC (25mm)
SURFACE
K2140WHI

Single outlet for connection to a single TV or FM co-axial aerial lead. Twin outlet for connection to each of two separate TV/FM, co-axial aerial leads.
DIMENSIONS
86 x 86mm
FIXING CENTRES
60.3mm
BS 5733:2010 where applicable
BS 3041:1977
IEC 169-2:1965

K3521WHI 10
SINGLE OUTLET

K3522WHI 10
TWIN OUTLET WITH FM/TV DIPLEXER

MOUNTING BOXES
FLUSH
861ZIC (25mm)
SURFACE
K2140WHI
Provides safety isolation rated at 2000Va.c. between aerial lead and socket.
Single outlet for connection to a single TV or FM co-axial aerial lead.
Twin outlet with TV/FM diplexer for connection to single co-axial aerial lead with combined TV & FM signals.
DIMENSIONS
86 x 86mm
FIXING CENTRES
60.3mm
BS 5733:2010 where applicable
BS 3041:1977 IEC 169-2:1965

Grid Plus Frontplates

K3631GRA

K3632WHI

K3633GRA

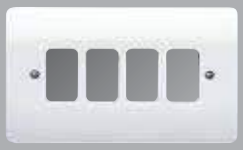
K3634WHI

K3636WHI

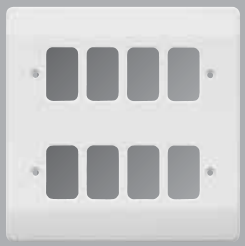
K3638WHI

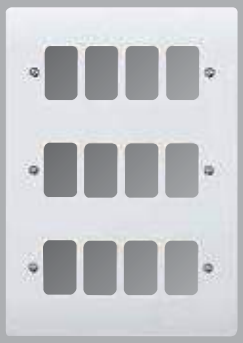
K3639WHI

K3631WHI 10
K3631GRA 10
1 MODULE

K3632WHI 10
K3632GRA 10
2 MODULE

K3633WHI 10
K3633GRA 10
3 MODULE

K3634WHI 10
K3634GRA 10
4 MODULE

All modules from the Grid Plus range can be used with these frontplates.
DIMENSIONS
1 & 2 MODULE: 86 x 86mm
3 & 4 MODULE: 86 x 146mm
6 & 8 MODULE: 146 x 146mm
12 MODULE: 206 x 146mm
BS 5733:2010

K3636WHI 1
K3636GRA 1
6 MODULE

K3638WHI 1
K3638GRA 1
8 MODULE

K3639WHI 1
12 MODULE

CEILING ACCESSORIES

RANGE INTRODUCTION

MK Electric offers a comprehensive range of white ceiling accessories for all requirements. Included in the range are enhanced 'safety' lampholders.

Unlike most other 'safety' lampholders, when the lamp is removed Shockguard Plus automatically shields the contact by means of a specially designed shutter and it remains that way until a lamp is replaced.

Therefore when no lamp is in place contact pins are totally isolated, eliminating danger of electrocution.

FEATURES & BENEFITS

EASE OF INSTALLATION

Pendant sets incorporate a heat resistant lampholder, ceiling rose with a transparent base and clear terminal markings for ease of identification. Terminals are grouped in line with neutral, loop-in and earth terminals.

SAFETY

Shockguard Plus has a specially designed shutter that automatically shields the lamp contacts, therefore eliminating the danger of electrocution.

RELIABILITY

All products are 100% tested before delivery for confidence, so a 'fit and forget' installation can be achieved. Fully compliant with the relevant British Standards BS 7895 for bayonet lampholders with enhanced safety and BS EN 61184.

DURABILITY

Manufactured from the highest quality materials to give a high gloss finish, which is both scratch and colour fade resistant.

Ceiling Accessories

Ceiling Switches

6 AMP
SURFACE

WITHOUT
MOUNTING BLOCKS
FLUSH

50A
FLUSH

Mounting Blocks and Cords

K3191WHI 5
6A SP ONE-WAY
1.5M WHITE CORD WITH
WHITE ACORN

K3191D1WHI 5
6A SP ONE-WAY
2M WHITE CORD
AND 1X GRAPHITE BANGLE

K3192WHI 5
6A SP TWO-WAY
1.5M WHITE CORD
AND WHITE ACORN

K3192D1WHI 5
6A SP TWO-WAY
2M WHITE CORD
AND 1X GRAPHITE BANGLE

Supplied with mounting blocks.
Earth terminal is riveted in base of mounting blocks.
BANGLE DIAMETER
50mm
These switches do not have to be derated when used with fluorescent or inductive loads.
FIXING CENTRES
50.8mm
BS EN 60669-1:1999

3190RCWHI 5
6A SP TWO WAY
2M RED CORD WITH RED ACORN
PULL TO MAKE OR PULL TO
BREAK (MOMENTARY SWITCH
ACTION)

3190RCD1WHI 5
6A SP TWO-WAY
3M RED CORD
AND 2X RED BANGLE

Supplied with mounting blocks.
BANGLE DIAMETER
50mm
BS EN 60669-1:1999

K3131WHI 5
6A SP TWO-WAY

3151WHI 5
16A DP ONE-WAY

Mounting blocks are not supplied. Use K2051WHI or K2056WHI.
Suitable for installation in small circular conduit boxes to BS EN 61386-1:2008 See page 354.
Ceiling switch cords are 1.5m minimum length.
These switches do not have to be derated when used with fluorescent or inductive loads.
FIXING CENTRES
50.8mm
BS EN 60669-1:1999

3164WHI 5
50A DP ONE-WAY
WITH NEON
1.5M WHITE

8329SSWHID1T9 5
2M WHITE CORD WITH JOINT
UNION AND GRAPHITE BANGLE

MOUNTING BOXES
Surface Moulded
2140WHI, 2180WHI
2031WHI (extra wiring space)
Flush Steel
877ZIC (for full load applications)
Surface Metal
2211ALM, 2213ALM
Fitted with a mechanical 'OFF' indicator. The switch fully complies with the requirements within BS 7671 IET Wiring Regulations with respect to safety isolation for maintenance purposes and provides a full 3mm contact gap when 'OFF'.
DIMENSIONS
86 x 86mm
BANGLE DIAMETER
50mm
FIXING CENTRES
60.3mm
BS EN 60669-1:1999

K2051WHI 10
MOUNTING BLOCK
FOR 6A OR 16A
SWITCHES

K2056WHI 5
MOUNTING BLOCK
WITH NEON
FOR 6A OR 16A
SWITCHES

8329SSWHIT9 10
1.5M WHITE CEILING
SWITCH CORD COMPLETE
WITH ACORN AND ONE PIECE
JOINT UNION

9420SST9 1
2M RED CEILING SWITCH
CORD COMPLETE WITH TWO
RED ACORNS AND ONE PIECE
JOINT UNION

9420SSD1 10
3M RED CEILING SWITCH CORD
COMPLETE WITH 2 X RED
BANGLES AND JOINT UNION

K2051WHI and **K2056WHI**
Earth terminal riveted in base.
DIAMETER
76mm not including Neon Lens
FIXING CENTRES
50.8mm
BS EN 60669-1:1999

Ceiling Accessories

Ceiling Roses

Lampholders

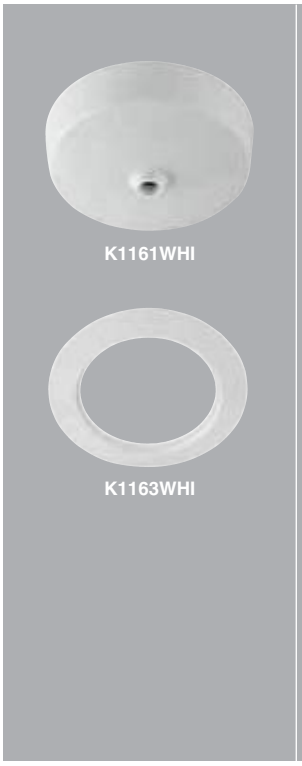

Unlike most 'safety' lampholders, when a lamp is removed Shockguard Plus automatically seals the contact by means of specially designed shutter and it remains that way until the lamp is replaced.

This means that with no bulb in place there is no danger of electrocution from exposed contacts, as the contact pins are fully shielded.

The MK Ceiling Rose has a transparent base, precut aperture and clear markings for ease of installation. Terminal layout allows cables to be cut to the same length and the earth terminal is positioned for easier cable access.

K1161WHI 10
FOUR TERMINALS
LINE, NEUTRAL,
LOOP-IN AND EARTH

K1163WHI 10
CEILING ROSE HALO

Incorporate tunnel type terminals, which accommodate 3 x 2.5mm² cables and allow for off centre cable entries, transparent terminal block and equal length wire stripping.
Suitable for fittings of up to 5kgs. Heavier fittings must be installed using independent support eg. ceiling hook.
The ceiling roses are suitable for mounting over BS EN 61386-1:2008 circular conduit boxes.

DIAMETER
(Cover) 86mm
DEPTH
(Cover) 34mm3
BS 67:1987
The Ceiling Rose Halo gives a neat finish should the ceiling be damaged.

K1170WHI 10
BC PENDANT LAMPHOLDER
WITH AUTOMATIC CORDGRIP
AND STRAIGHT SKIRT

K1171WHI 10
BC PENDANT LAMPHOLDER
WITH AUTOMATIC CORDGRIP
AND PROTECTIVE SKIRT

K1180WHI 10
STRAIGHT SKIRT FOR
MK LAMPHOLDERS

K1181WHI 10
PROTECTIVE SKIRT FOR
MK LAMPHOLDERS

All MK lampholders are heat resistant to category T2 of BS EN 61184 and are therefore capable of operation with lamp cap temperatures up to 210°C.
BS EN 61184:1997 T2 Rated.

Ceiling Accessories

Lampholders

SG TYPE

1150WHI

Pendant Sets

SG TYPE

K1186WHI

K1189WHI

1146WHI

1149WHI

Batten Lampholders

SG TYPE

K1172WHI

1174WHI

SG TYPE

1152WHI

1154WHI

1150WHI 10
BC PENDANT
SG TYPE LAMPHOLDER

Shockguard SG Type lampholders automatically shield contacts by means of a shutter when the lamp is removed.
All MK SG Type lampholders are heat resistant to category T2 of BS EN 61184 and are therefore capable of operation with lamp cap temperatures up to 210°C.
BS EN 61184:1997
BS 7895:1997

K1186WHI 10
150MM PENDANT SET

K1189WHI 10
230MM PENDANT SET

K1186WHI and **K1189WHI** incorporate a lampholder (K1170WHI), heat resisting PVC insulated and sheathed flexible 0.75mm² two core circular cable complying with BS EN 50525-2-11 and a ceiling rose fitted with line, neutral, loop-in and earth terminals (K1161WHI).
This assembly will support a light fitting of up to 3kgs.

1146WHI 10
SG TYPE
150MM PENDANT SET

1149WHI 10
SG TYPE
230MM PENDANT SET

1146WHI and **1149WHI** incorporate a SG lampholder (1150WHI), heat resisting PVC insulated and sheathed flexible 0.75mm² two core circular cable complying with BS EN 50525-2-11 and a ceiling rose fitted with line, neutral, loop-in and earth terminals (1174WHI).
This assembly will support a light fitting of up to 3kgs.

K1172WHI 10
BC ANGLED

1174WHI 10
HEAT RESISTANT TAILS, LIVE, NEUTRAL, LOOP-IN AND EARTH TERMINALS

All MK lampholders are heat resistant to category T2 of BS EN 61184 and are therefore capable of operation with lamp cap temperatures up to 210°C.
1174WHI also incorporates heat resistant wires connecting the terminals in the base to the lampholder. It has terminals mounted in the base and knockouts which accommodate 3 x 2.5 mm² cables and allow for off centre cable entries.
BS EN 61184:1997 T2 Rated.

1152WHI 10
SG TYPE
ANGLED BATTEN LAMPHOLDER
HEAT RESISTANT TAILS, LIVE, NEUTRAL, LOOP-IN AND EARTH TERMINALS

1154WHI 10
SG TYPE
BATTEN LAMPHOLDER
HEAT RESISTANT TAILS, LIVE, NEUTRAL, LOOP-IN AND EARTH TERMINALS

Shockguard SG Type lampholders automatically shield contacts by means of a shutter when the lamp is removed.
All MK SG Type lampholders are heat resistant to category T2 of BS EN 61184 and are therefore capable of operation with lamp cap temperatures up to 210°C.
1152WHI and **1154WHI** also incorporate heat resistant wires connecting the terminals in the base to the lampholder.
BS EN 61184:1997 T2 Rated.
BS 7895:1997

Oxford University Images/David Williams

CASE STUDY

THE MALTHOUSE, OXFORD UNIVERSITY – MK PORTFOLIO

Oxford University Estates Services, who are responsible for managing over 350 buildings and properties for the university, have their offices located at The Malthouse in central Oxford.

Their fully functional office space has been refurbished utilising a variety of MK products including Prestige 3D Compact and Integrated USB sockets, which were selected due to their superior manufacturing quality, reliability and functionality.

LINK

RANGE INTRODUCTION

The MK Link connection and distribution system brings plug-in convenience and versatility for lighting installations.

It is a modular plug and socket interface that provides electrical connection in one easy click-in action. Luminaires can be plugged in without circuit isolation. All live contacts are inaccessible and the earthing connection is made before any other.

Wired products incorporate either heat resisting flex or low smoke zero halogen (LSF) insulated and sheathed flexible 0.75mm four core circular cable.

FEATURES & BENEFITS

- Live contacts are inaccessible
- Earth contact – first to make, last to break
- Mechanical and electrical connection in one 'click-in' action
- Strong load grips support up to 5kg

HOW TO SPECIFY

A secure lighting connection and control system, which is modular in design to enable electrical connection in one easy action. Live contacts to be inaccessible to enable luminaires to be plugged in and removed without circuit isolation. Static suspension load for plugs, sockets and pre-wired assemblies, must be able to support up to 5kg weight.

3 Pin Accessories

3 PIN PLUGS 6 AMP

K3230WHI

3 PIN SOCKETS 6 AMP

K3220WHI

K3212WHI

3 PIN CEILING ROSES 6 AMP

K3240WHI

3 Pin Pre-wired

3 PIN PLUGS 6 AMP

K3232WHI

K3233WHI

3 PIN CEILING ROSES 6 AMP

K3242WHI

K3243LSF

K3230WHI 10
WHITE 3 PIN PLUG
WITH CORD GRIP

DIMENSIONS
57 x 25 x 25mm
TERMINALS
Phase, neutral and earth terminals will each accept 1 x 0.75, 1 x 1.00mm* conductors.
NOTE
K3230 can be used with the 4 pin socket outlets in this range.
BS 6972 & BS 5733

K3220WHI 10
CIRCULAR (BESA)

K3212WHI 10
ARCHITRAVE
WITH TRUNKING CLAMP

DIMENSIONS
K3220
75mm dia. & 7mm depth
K3212
86 x 33 x 6mm deep & 7mm projection
FIXING CENTRES
K3220
50.8mm diagonal BESA
K3212
60.3mm
MOUNTING BOXES
K3220: Conduit BESA Egatube boxes
TERMINALS
Phase, neutral, earth & 'loop in' terminals will each accept 5 x 0.75, 5 x 1.00, 4 x 1.50, 3 x 2.50 or 2 x 4.00mm2 conductors
NOTE
only 3 pin plugs can be used with these sockets
BS 6972 & BS 5733

K3240WHI 10
CEILING ROSE (BESA)
WITH 3 PIN PLUG

DIMENSIONS
K3240
75mm dia. x 44mm & 7mm fitting depth
FIXING CENTRES
K3240
50.8mm diagonal BESA
MOUNTING BOXES
K3240: Conduit BESA Egatube boxes
TERMINALS
Phase, neutral, earth and 'loop in' terminals will each accept 5 x 0.75, 5 x 1.00, 4 x 1.50, 3 x 2.50, or 2 x 4.00mm conductors
BS 6972 & BS 5733.

K3232WHI 10
3 PIN PLUG FITTED WITH
2M WHITE PVC FLEX

K3233WHI 5
3 PIN PLUG FITTED WITH
3M WHITE PVC FLEX

K3232WHI & K3233WHI incorporate K3230WHI fitted with the respective length of heat resisting PVC insulated and sheathed flexible 0.75mm three core circular cable complying with BS 6500: 2000 (Table 29).

K3242WHI 10
CEILING ROSE AND 3 PIN PLUG
FITTED WITH 2M PVC FLEX

K3243WHI 5
CEILING ROSE AND 3 PIN PLUG
FITTED WITH 3M PVC FLEX

K3242LSF 10
CEILING ROSE AND 3 PIN PLUG
FITTED WITH 2M LSF FLEX

K3243LSF 5
CEILING ROSE AND 3 PIN PLUG
FITTED WITH 3M LSF FLEX

K3242WHI & K3243WHI incorporate K3240WHI fitted with the respective length of heat resisting PVC insulated and sheathed flexible 0.75mm three core circular cable complying with BS 6500: 2000 (Table 29).
K3242LSF & K3243LSF incorporate K3240WHI fitted with the respective length of low smoke zero halogen insulated and sheathed flexible 0.75mm three core circular cable to BS 6972 & BS 5733.

GENERAL SPECIFICATION
Rated voltage for all plugs, sockets and pre-wired assemblies 250V 50Hz
Rated load current for all plugs, sockets and pre-wired assemblies 6A
Static suspension load for plugs, sockets and pre-wired assemblies 5kg max.

Link

4 Pin Accessories

4 PIN PLUGS
6 AMP

K4230WHI

4 PIN SOCKETS
6 AMP

K4214WHI

K4220WHI

4 PIN CEILING ROSES
6 AMP

K4240WHR

K4240WHR

4 Pin Pre-wired

PREWIRED 4 PIN PLUGS
6 AMP

K4232WHR

PREWIRED 4 PIN CEILING ROSES
6 AMP

K4242WHR

K4243LSF

K4230WHI 10
WHITE 4 PIN PLUG WITH CORD GRIP

DIMENSIONS
57 x 35 x 44mm
TERMINALS
Phase neutral, earth and auxiliary terminals will each accept 1 x 0.75, 1 x 1.00mm conductors
NOTE
K4230 cannot be used with the 3 pin socket outlets in this range.
BS 6972 & BS 5733

K4214WHI 10
ONE GANG 4 PIN SOCKET OUTLET

K4220WHI 10
CIRCULAR (BESA) 4 PIN SOCKET OUTLET

DIMENSIONS
K4214
86 x 86 x 9mm & 5mm depth
K4220
75mm dia. & 7mm depth
FIXING CENTRES
K4214
60.3mm
K4220
50.8mm diagonal (BESA)
MOUNTING BOXES
K4214
Surface K2160WHI, flush dryline QFB1whi or flush solid 861ZIC
K4220
Conduit BESA Egatube boxes
TERMINALS
Phase, neutral, earth, auxiliary & 'loop in' terminals will each accept 5 x 0.75, 5 x 1.00, 4 x 1.50, 3 x 2.50 or 2 x 4.00mm conductors
NOTE
3 and 4 pin plugs can be used with the 4 pin socket outlets in this range.
BS 6972 & BS 5733

K4240WHR 10
CEILING ROSE (BESA) WITH RED 4 PIN PLUG

DIMENSIONS
FIXING CENTRES
50.8mm diagonal (BESA)
MOUNTING BOXES
Conduit BESA Egatube boxes
TERMINALS
Phase, neutral, earth, auxiliary & 'loop in' terminals will each accept 5 x 0.75, 5 x 1.00, 4 x 1.50, 3 x 2.50 or 2 x 4.00mm conductors
BS 6972 & BS 5733

GENERAL SPECIFICATION
Rated voltage for all plugs, sockets and pre-wired assemblies 250V 50Hz
Rated load current for all plugs, sockets and pre-wired assemblies 6A
Static suspension load for plugs, sockets and pre-wired assemblies 5kg max.

K4232WHR 10
RED 4 PIN PLUG WITH 2M WHITE PVC FLEX.

K4233WHR 5
RED 4 PIN PLUG WITH 3M WHITE PVC FLEX

K4232WHR & **K4233WHR** incorporate K4230WHI fitted with the respective length of heat resisting PVC insulated and sheathed flexible 0.75mm four core circular cable complying with BS 6500:2000 (Table 29)
BS 6972 & BS 5733

K4242WHR 10
CEILING ROSE WITH RED 4 PIN PLUG AND 2M PVC FLEX

K4243WHR 5
CEILING ROSE WITH RED 4 PIN PLUG AND 3M PVC FLEX

K4242LSF 10
CEILING ROSE WITH RED 4 PIN PLUG AND 2M LSF FLEX

K4243LSF 5
CEILING ROSE WITH RED 4 PIN PLUG AND 3M LSF FLEX

K4242WHR & **K4243WHR** incorporate K4240WHR fitted with the respective length of heat resisting PVC insulated and sheathed flexible 0.75mm four core circular cable complying with BS 6500:2000 (Table 29)
K4242LSF & **K4243LSF** incorporate K4240WHR fitted with the respective length of low smoke zero halogen insulated and sheathed flexible 0.75mm four core circular cable to BS 6972 & BS 5733

Mounting Boxes

ARCHITRAVE MOULDED FLUSH

K2151WHI

STEEL FLUSH

3921ZIC

SQUARE MOULDED FLUSH

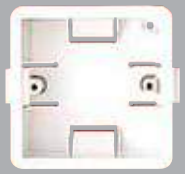

QFB1WHI

QFB/IG1

K2160WHI

STEEL FLUSH

861ZIC

CIRCULAR SURFACE

2ECR1WHI

2ECR3WHI

K2151WHI 10
1 GANG
ARCHITRAVE BOX

K2151WHI
Earth terminal fitted in base.
DIMENSIONS
87 x 33 x 16mm
FIXING CENTRES
60.3mm
BS 5733:1995

3921ZIC 10
1 GANG
ARCHITRAVE BOX

With earth terminal
DIMENSIONS
75 x 27 x 27mm
FIXING CENTRES
60.3mm
KNOCKOUTS
3 x 16mm
BS 4662:1970

QFB1WHI 20
1 GANG
DRY LINING BOX

QFB/IG1 20
1 GANG
DRY LINING BOX
WITH INTUMESCENT GASKET

K2160WHI 10
1 GANG 16MM
MOULDED BOX

QFB1
All round flange for flush fit. One piece moulded lug automatically snaps into place. No rear projections. Clamp device on cable entry. Will accommodate partition thicknesses between 6mm and 16mm. Earth terminal facility.
K2160WHI
Earth terminal fitted in base of boxes.
DIMENSIONS
K2160: 87 x 87mm
FIXING CENTRES
60.3mm
BS 5733:1995
QFB/IG1
Pre-fitted with intumescent gaskets to give fire protection, in accordance with BS 476 Pt 22:1987. In a fire situation, a chemical reaction will occur with the intumescent material. The void behind the wiring device will be filled, providing protection against the passage of fire.

BS 4662:1970 where applicable.

861ZIC 10
1 GANG
ONE ADJUSTABLE LUG

With earth terminal
DIMENSIONS
75 x 75mm
FIXING CENTRES
60.3mm
KNOCKOUTS
12 x 20mm
BS 4662:1970

2ECR13WHI 25
2ECR13BLK 25
20MM LOOP-IN
2ECR1WHI 25
2ECR1BLK 25
20MM BACK OUTLET
2ECR3WHI 25
2ECR3BLK 25
20MM TWO WAY
2ECR8WHI 10
2ECR8BLK 10
20MM TWO WAY AND
BACK OUTLET

CONDUIT BOXES
20mm Loop-in boxes have 4 x 20mm knockouts on underside.
MATERIAL
PVC-U
LID FIXING CENTRES
50.8mm
PILLAR THREAD SIZE
M4 (Brass inserts) All boxes contain a moulded recess for earth terminal.
See pages 354 for the full selection of circular conduit boxes.

GENERAL SPECIFICATION
Rated voltage for all plugs, sockets and pre-wired assemblies 250V 50Hz
Rated load current for all plugs, sockets and pre-wired assemblies 6A
Static suspension load for plugs, sockets and pre-wired assemblies 5kg max.

Link

Distribution Boxes

Fixing of the distribution box to lighting trunking is made easy through the choice of cable entry points.

The distribution box can be suspended on drop rods utilising Caddy Clips.*

The distribution box can be fitted directly to the wall or ceiling using the pilot holes provided in the base.

K4204

K4208

K4206

K4210

K4204 1
4 GANG 6A
4 PIN SOCKET
LIGHTING DISTRIBUTION BOX

K4206 1
6 GANG 6A
4 PIN SOCKET
LIGHTING DISTRIBUTION BOX

K4208 1
8 GANG 6A
4 PIN SOCKET
LIGHTING DISTRIBUTION BOX

K4210 1
10 GANG 6A
4 PIN SOCKET
LIGHTING DISTRIBUTION BOX

DIMENSIONS
K4204: 80 x 222 x 237mm
K4206: 80 x 222 x 290mm
K4208: 80 x 222 x 400mm
K4210: 80 x 222 x 465mm

MOUNTINGS
Provision for screw (No. 8) fix to walls or trunking and slots for *Caddy Clips on top, bottom and back faces.
Conduit entries with snap fit blanks; 20 & 25mm in top, bottom and back faces. Outlets can be wired as 1 or 2 banks.

TERMINAL CAPACITY
3 x 6mm rated at 16A.
Each socket is rated at 6A.
Extruded aluminium body with VO rated plastic terminal housing. Both 3 & 4 pin plugs can be used with the distribution box 4 pin socket outlets.
BS 5733

*Caddy Clip is a registered trade mark of Erico Europa (UK) Ltd. Reading.

SENSORS

RANGE INTRODUCTION

MK Sensors are designed to deliver energy savings and lighting control in a range of commercial and domestic applications. Lighting represents 19% of a building's total energy consumption* lighting controls can help you cut that by up to 70%.

The MK Sensor range deploys PIR and ultrasonic sensing technology to provide effective presence detection.

All products in the MK sensors range have a built in photocell, providing accurate light level detection. This allows sensors to harness natural daylight, delivering further energy savings by either holding off, switching lights off or regulating to maintain a constant light level.

*Source: Department of Energy and Climate change (July 2012)

FEATURES & BENEFITS

- Built in photocell provides light level detection
- Sensors can be installed for absence detection
- 2A, 6A and 10A products
- Easy to install and program
- Flush and surface mounted variants available
- Ideal for most interior environments
- Switching and digital dimming detectors
  Ideal for retrofit and new build installations

Sensors

Product featured is a Superior PIR.

Sensors

SimpleFit Sensors

DUAL MOUNT
6A

K5017

K5017 1
SIMPLE FIT DUAL MOUNT
PIR SENSOR WITH
PHOTOCELL
FLUSH AND SURFACE CEILING
MOUNT
6M DETECTION
6A

DIMENSIONS
66 x 97mm

SimpleFit Sensors

DEDICATED SURFACE
AND FLUSH MOUNT
6A

K5015

K5016

K5015 1
SIMPLE FIT PIR SENSOR
WITH PHOTOCELL
FLUSH MOUNT
CEILING MOUNT
6M DETECTION
6A

K5016 1
SIMPLE FIT PIR SENSOR
WITH PHOTOCELL
SURFACE MOUNT
CEILING MOUNT
6M DETECTION
6A

DIMENSIONS
FLUSH
76 x 86mm
SURFACE
86 x 86mm x 54.5mm

Superior PIRs

SWITCHING
10A

K5030F

K5030SM

K5030F 1
SUPERIOR PIR
FLUSH MOUNT
10M DETECTION
10A

K5030SM
SUPERIOR PIR
SURFACE MOUNT
10M DETECTION
10A

DIMENSIONS
87 x 93mm

K4098 HAND-HELD
PROGRAMMER REQUIRED FOR
COMMISSIONING OF THESE
PRODUCTS

Superior PIRs

DIMMING
10A

K5040F

K5040SM

K5040F 1
SUPERIOR PIR FOR DIGITAL
DIMMING (DALI AND DSI)
FLUSH MOUNT
10M DETECTION
10A

K5040SM 1
SUPERIOR PIR FOR DIGITAL
DIMMING (DALI AND DSI)
SURFACE MOUNT
10M DETECTION
10A

DIMENSIONS
87 x 93mm

K4098 HAND-HELD
PROGRAMMER REQUIRED FOR
COMMISSIONING OF THESE
PRODUCTS

BattenFit Sensor

IP65
2A

K4047

K4047 1
BATTENFIT SENSOR
2A SWITCHING PHOTOCELL
6M DETECTION
IP65

DIMENSIONS
150 x 40 x 29mm

K4058 HAND-HELD
PROGRAMMER REQUIRED FOR
COMMISSIONING OF THESE
PRODUCTS

OPERATING VOLTAGE: 230V 50Hz, Material: Flame retardant PC/ABS, **RECOMMENDED CIRCUIT PROTECTION:** 10A

Sensors

Ultrasonic

Hand-Held Programming tools

10A

K4030

K4031

K4058

K4098

K4030 1
CORNER MOUNTED, SURFACE, 10A

K4031 1
CORNER MOUNTED, SEMI FLUSH, 10A

DIMENSIONS
CEILING
100 x 72mm
CORNER
74 x 95mm

K4058 1
HAND HELD PROGRAMMER FOR USE WITH K4047

K4098 1
HAND HELD PROGRAMMER FOR USE WITH K5030 AND K5040

DECORATIVE

RANGE INTRODUCTION

MK's decorative wiring device portfolio now includes the MK Elements range which stylishly showcases new colours, materials and finishes for greater choice and flexibility.

With 29 high quality finishes available across 4 individual ranges you will now find a style and finish that will compliment any modern, contemporary or traditional interior design scheme.

Great design relies on that precise combination of material, texture, colour and tone to create that wow factor. The ability to do the same thing with your wiring devices means you never have to settle for second best. Whether it's a new finish, combining technology or adding engraving to your products MK's Design Service team can help you achieve your design goals.

MK Electric have continued to invest in their UK manufacturing equipment, in order to be more flexible to your decorative wiring device needs whilst still offering the same level of quality and service.

FEATURES & BENEFITS

- 29 stunning finishes across 5 different material types including metal, glass effect and wood
- 4 Individual range options
- Choices of a screwed or screwless aesthetic
- Choice of frontplate depth – modern 1.5mm, contemporary 4mm, distinctive 7.5mm or traditional 9mm
- Compliment any interior design scheme
- Flexibility and custom options with MK's Design Service

Decorative

RANGE INTRODUCTION

Aspect, Edge and Albany Plus Finish Options”

BRUSHED STAINLESS STEEL (BSS*)

LACQUERED BRUSHED STEEL (LBS*)

BRUSHED CHROME (BRC*)

POLISHED CHROME (POC/PCR*)

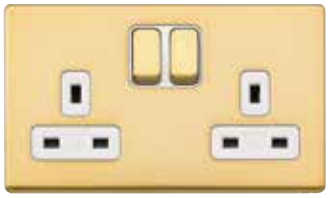

SATIN GOLD (SAG*)

PORCELAIN WHITE (WHI)

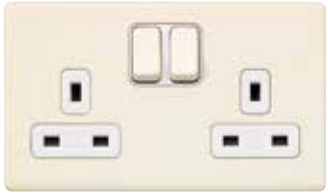

LUSTROUS IVORY (LIV)

LUSTROUS BLACK (LBK)

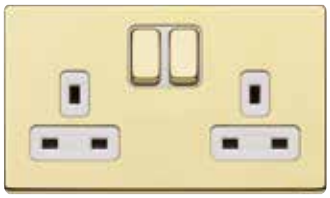

POLISHED BRASS (PBR*)

TEXTURED IRON (TIR)

DESERT BRONZE (DBZ)

ANTIQUE BRASS (ABS)

TEXTURED COPPER (TCO)

*Available with the option of either white or black inserts

RANGE INTRODUCTION

Elements Finish Options

SYNTHETIC
CHALK WHITE
(SCW)

GLASS EFFECT
ICE WHITE
(GIW)

SYNTHETIC
NATURAL STONE
(SNS)

GLASS EFFECT
POLISHED JADE
(GPJ)

SYNTHETIC
BEACH PEBBLE
(SBP)

GLASS EFFECT
POLISHED ONYX
(GPO)

METALLIC
SATIN PLATINUM
(MSP)

GLASS EFFECT
POLISHED STONE
(GPS)

METALLIC
BRUSHED BRONZE
(MBB)

NATURAL
BRITISH OAK
(NBO)

METALLIC
SATIN TITANIUM
(MST)

NATURAL
DARK WENGE
(NDW)

METALLIC
CAST IRON
(MCI)

NATURAL
CREAM HIDE
(NCH)

METALLIC
BRUSHED STEEL
(MBS)

NATURAL
DARK HIDE
(NDH)

ELEMENTS

RANGE INTRODUCTION

The MK Elements collection is a revolutionary range of stylish wiring devices. Innovative, iconic and inspiring, the Elements collection is the perfect fusion of distinctive design and unparalleled quality. Inspired by materials such as wood, leather and stone, and with electronic touch control switches and dimmers, the MK Elements collection offers the perfect companion for any interior.

With Elements comes the ultimate fusion of distinctive design and unparalleled quality. The range provides slim, screwless profiles and silent operation, alongside a diverse range of colours, styles and textures, providing the ultimate choice for any interior.

HOW TO SPECIFY

A modern square edged range of wiring devices with metal, glass effect, natural & synthetic finished front plates designed to be fixed within and flush to the colour co-ordinated moulded trim. Moulded Frontplates to be polycarbonate and constructed of two colour matched sections, with an overall profile depth of 7.5mm. Frontplates to be screwless, removable by flat blade screwdriver through discreet bottom access apertures. There shall be no plastic bezel/surround to switch rockers and socket inserts are to be designed with clean, crisp edges. Plug pins shall insert into separate individual socket apertures. Switch rockers and socket inserts to be colour matched to moulded trim. Cable connections must be upward facing with easy to identify white markings on a dark background, grouped in a straight line with captive terminal screws for ease of installation. All sockets to have a 3 pin operated shutter safety mechanism and double pole switching, with the contacts designed such that the neutral makes before and breaks after the live pole for improved safety. Switches to be large with a minimum 3mm contact gap with a positive 'click' to denote successful operation.

FEATURES & BENEFITS

16 STANDARD HIGH QUALITY FINISHES WITH ULTIMATE FLEXIBILITY

16 standard finishes across 4 material groups allow designers to easily complement any interior design. The design service offering also means we can create tailor-made products to suit individual needs.

TOTAL SAFETY

3-pin operated 'child resistant shutter system', which is designed to inhibit access to the electricity supply, unless all 3 pins of a standard British 13A plug are in position.

UNRIVALLED QUALITY AND RELIABILITY

Products are made from the very best materials and production processes. All products are 100% tested.

COMPREHENSIVE RANGE OF SOCKETS, SWITCHES AND MODULAR ANCILLARY PRODUCTS

Whatever the application, the Elements range has a wiring device to suit.

20 YEAR GUARANTEE

Gives total peace of mind to you and your customers. (5 year guarantee for electronic devices)

Elements

NO VISIBLE BEZEL

FRONTPLATE AVAILABLE
IN 16 FINISHES
Including Glass effect,
Wood, Synthetic and Metal

DOUBLE POLE SWITCHING

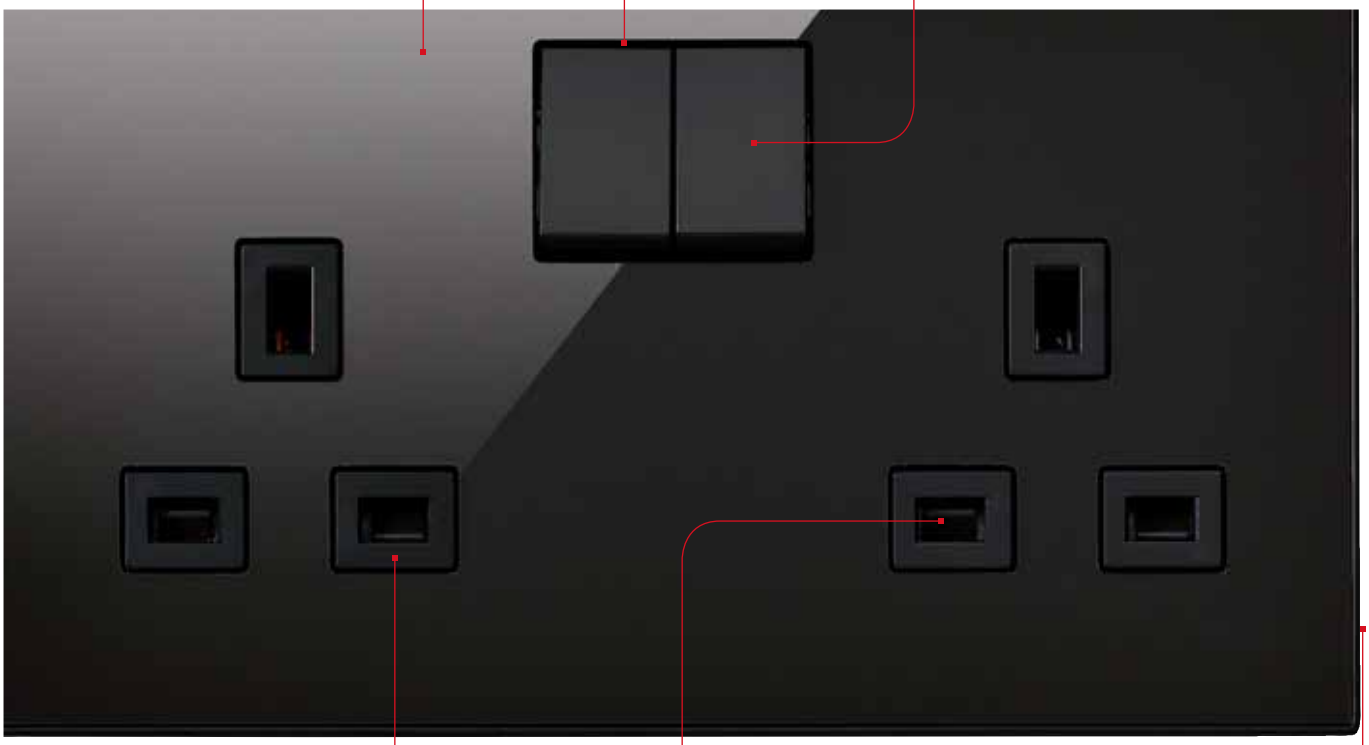

OPTIONAL INSERT COLOUR
Choice of chalk white, black,
beach pebble and natural
stone

SLIM, SCREWLESS DESIGN
Frontplate profile 7.5mm

3-PIN "CHILD RESISTANT SHUTTER SYSTEM"
Designed to inhibit access to the electricity supply,
unless all 3 pins of a standard 13A plug are in position

Naturals

Synthetics

Metallic

Glass Effect

Elements

Switchsocket Outlets

	1 GANG DP DUAL EARTH 13 AMP	1 GANG DP WITH LED INDICATOR/ LOCATOR DUAL EARTH 13 AMP	2 GANG DP 13 AMP	2 GANG DP WITH LED INDICATOR/ LOCATOR 13 AMP	2 GANG DP DUAL EARTH 13 AMP
SYNTHETIC FINISHES					
CHALK WHITE – SCW	K34357SCW 1	K34357NSCW 1	K34347SCW 1	K34347NSCW 1	K34547SCW 1
NATURAL STONE – SNS	K34357SNS 1	K34357NSNS 1	K34347SNS 1	K34347NSNS 1	K34547SNS 1
BEACH PEBBLE – SBP	K34357SBP 1	K34357NSBP 1	K34347SBP 1	K34347NSBP 1	K34547SBP 1
GLASS EFFECT FINISHES					
ICE WHITE – GIW	K34357GIW 1	K34357NGIW 1	K34347GIW 1	K34347NGIW 1	K34547GIW 1
POLISHED JADE – GPJ	K34357GPJ 1	K34357NGPJ 1	K34347GPJ 1	K34347NGPJ 1	K34547GPJ 1
POLISHED ONYX – GPO	K34357GPO 1	K34357NGPO 1	K34347GPO 1	K34347NGPO 1	K34547GPO 1
POLISHED STONE – GPS	K34357GPS 1	K34357NGPS 1	K34347GPS 1	K34347NGPS 1	K34547GPS 1
METALLIC FINISHES					
BRUSHED STEEL – MBS	K34357MBS 1	K34357NMBS 1	K34347MBS 1	K34347NMBS 1	K34547MBS 1
BRUSHED BRONZE – MBB	K34357MBB 1	K34357NMBB 1	K34347MBB 1	K34347NMBB 1	K34547MBB 1
CAST IRON – MCI	K34357MCI 1	K34357NMCI 1	K34347MCI 1	K34347NMCI 1	K34547MCI 1
SATIN PLATINUM – MSP	K34357MSP 1	K34357NMSP 1	K34347MSP 1	K34347NMSP 1	K34547MSP 1
SATIN TITANIUM – MST	K34357MST 1	K34357NMST 1	K34347MST 1	K34347NMST 1	K34547MST 1
NATURAL FINISHES					
BRITISH OAK – NBO	K34357NBO 1	K34357NNBO 1	K34347NBO 1	K34347NNBO 1	K34547NBO 1
CREAM HIDE – NCH	K34357NCH 1	K34357NNCH 1	K34347NCH 1	K34347NNCH 1	K34547NCH 1
DARK HIDE – NDH	K34357NDH 1	K34357NNDH 1	K34347NDH 1	K34347NNDH 1	K34547NDH 1
DARK WENGE – NDW	K34357NDW 1	K34357NNDW 1	K34347NDW 1	K34347NNDW 1	K34547NDW 1

LEAD TIMES
Please contact our Customer Services Department on
01268 563 404

	1 GANG DP DUAL EARTH 13 AMP	1 GANG DP WITH LED INDICATOR/ LOCATOR DUAL EARTH 13 AMP	2 GANG DP 13 AMP	2 GANG DP WITH LED INDICATOR/ LOCATOR 13 AMP	2 GANG DP DUAL EARTH 13 AMP
MOUNTING BOXES	**35mm** 866ZIC **46mm** 877ZIC (for extra wiring space)	**35mm** 866ZIC **46mm** 877ZIC (for extra wiring space)	**35mm** 886ZIC **47mm** 878ZIC (for extra wiring space)	**35mm** 886ZIC **47mm** 878ZIC (for extra wiring space)	**35mm** 886ZIC **47mm** 878ZIC (for extra wiring space)
DIMENSIONS	86 x 86mm	86 x 86mm	86 x 146mm	86 x 146mm	86 x 146mm
FIXING CENTRES	60.3mm	60.3mm	120.6mm	120.6mm	120.6mm
	BS 1363-2:1995	BS 1363-2:1995	BS 1363-2:1995	BS 1363-2:1995	BS 1363-2:1995

Dual Earth: Fitted with two earth terminals to provide a double earth facility for use when installations require a high integrity protective connection as specified within BS 7671:2008.

Elements

Socket Outlets

2 GANG DP DUAL EARTH WITH LED INDICATOR/ LOCATOR 13 AMP		2 GANG DP WITH 2 X USB CHARGING PORTS DUAL EARTH 13 AMP		1 GANG SP ROUND PIN 5 AMP		1 GANG UNSWITCHED 13 AMP	
K34547NSCW	1	K34343SCW	1	K34382SCW	1	K34780SCW	1
K34547NSNS	1	K34343SNS	1	K34382SNS	1	K34780SNS	1
K34547NSBP	1	K34343SBP	1	K34382SBP	1	K34780SBP	1
K34547NGIW	1	K34343GIW	1	K34382GIW	1	K34780GIW	1
K34547NGPJ	1	K34343GPJ	1	K34382GPJ	1	K34780GPJ	1
K34547NGPO	1	K34343GPO	1	K34382GPO	1	K34780GPO	1
K34547NGPS	1	K34343GPS	1	K34382GPS	1	K34780GPS	1
K34547NMBS	1	K34343MBS	1	K34382MBS	1	K34780MBS	1
K34547NMBB	1	K34343MBB	1	K34382MBS	1	K34780MBB	1
K34547NMCI	1	K34343MCI	1	K34382MCI	1	K34780MCI	1
K34547NMSP	1	K34343MSP	1	K34382MSP	1	K34780MSP	1
K34547NMST	1	K34343MST	1	K34382MST	1	K34780MST	1
K34547NNBO	1	K34343NBO	1	K34382NBO	1	K34780NBO	1
K34547NNCH	1	K34343NCH	1	K34382NCH	1	K34780NCH	1
K34547NNDH	1	K34343NDH	1	K34382NDH	1	K34780NDH	1
K34547NNDW	1	K34343NDW	1	K34382NDW	1	K34780NDW	1
MOUNTING BOXES **35mm** 886ZIC **47mm** 878ZIC (for extra wiring space) **DIMENSIONS** 86 x 146mm **FIXING CENTRES** 120.6mm BS 1363-2:1995		USB charging sockets, each capable of supporting 2A charge (total of 2A) Pattress available for use where existing back box is too shallow, see page 34 **MOUNTING BOXES** **35mm** 886ZIC **47Mmm** 878ZIC (for extra wiring space) **DIMENSIONS** 86 x 146mm **FIXING CENTRES** 120.6mm BS5733:2010		**MOUNTING BOXES** **35mm** 866ZIC **46MMmm** 877ZIC (for extra wiring space) **DIMENSIONS** 86 x 86mm **FIXING CENTRES** 60.3mm BS 546:1950		**MOUNTING BOXES** **35mm** 866ZIC **46mm** 877ZIC (for extra wiring space) **DIMENSIONS** 86 x 86mm **FIXING CENTRES** 60.3mm BS 1363-2:1995	

Dual Earth: Fitted with two earth terminals to provide a double earth facility for use when installations require a high integrity protective connection as specified within BS 7671:2008.

Elements

Multimedia Plates

	2 GANG DP SWITCHSOCKET, EURO 2 MODULE 50 X 50MM (RIGHT SIDE) 13 AMP	2 GANG DP SWITCHSOCKET, EURO 2 MODULE 50 X 50MM (LEFT SIDE) 13 AMP	2 GANG DP SWITCHSOCKET, EURO 4 MODULE 50 X 50MM (X2) 13 AMP
SYNTHETIC FINISHES			
CHALK WHITE – SCW	K34206SCW 1	K34207SCW 1	K34208SCW 1
NATURAL STONE – SNS	K34206SNS 1	K34207SNS 1	K34208SNS 1
BEACH PEBBLE – SBP	K34206SBP 1	K34207SBP 1	K34208SBP 1
GLASS EFFECT FINISHES			
ICE WHITE – GIW	K34206GIW 1	K34207GIW 1	K34208GIW 1
POLISHED JADE – GPJ	K34206GPJ 1	K34207GPJ 1	K34208GPJ 1
POLISHED ONYX – GPO	K34206GPO 1	K34207GPO 1	K34208GPO 1
POLISHED STONE – GPS	K34206GPS 1	K34207GPS 1	K34208GPS 1
METALLIC FINISHES			
BRUSHED STEEL – MBS	K34206MBS 1	K34207MBS 1	K34208MBS 1
BRUSHED BRONZE – MBB	K34206MBB 1	K34207MBB 1	K34208MBB 1
CAST IRON – MCI	K34206MCI 1	K34207MCI 1	K34208MCI 1
SATIN PLATINUM – MSP	K34206MSP 1	K34207MSP 1	K34208MSP 1
SATIN TITANIUM – MST	K34206MST 1	K34207MST 1	K34208MST 1
NATURAL FINISHES			
BRITISH OAK – NBO	K34206NBO 1	K34207NBO 1	K34208NBO 1
CREAM HIDE – NCH	K34206NCH 1	K34207NCH 1	K34208NCH 1
DARK HIDE – NDH	K34206NDH 1	K34207NDH 1	K34208NDH 1
DARK WENGE – NDW	K34206NDW 1	K34207NDW 1	K34208NDW 1

LEAD TIMES
Please contact our Customer Services Department on
01268 563 404

MOUNTING BOXES
47mm
870ZIC
DIMENSIONS
90.5 x 238mm
BS 1363-2: 1995

MOUNTING BOXES
47mm
870ZIC
DIMENSIONS
90.5 x 238mm
BS 1363-2: 1995

MOUNTING BOXES
47mm
868ZIC
DIMENSIONS
90.5 x 325.3mm
BS 1363-2: 1995

Elements

Shaver/Toothbrush Supply Units

DUAL VOLTAGE
OUTPUT 115/230V
INPUT 220/240V
50/60HZ

EURO 8 MODULE 100 X 50MM (X2)		EURO 12 MODULE 150 X 50MM (X2)			
K34209SCW	1	K34210SCW	1	K34709SCW	1
K34209SNS	1	K34210SNS	1	K34709SNS	1
K34209SBP	1	K34210SBP	1	K34709SBP	1
K34209GIW	1	K34210GIW	1	K34709GIW	1
K34209GPJ	1	K34210GPJ	1	K34709GPJ	1
K34209GPO	1	K34210GPO	1	K34709GPO	1
K34209GPS	1	K34210GPS	1	K34709GPS	1
K34209MBS	1	K34210MBS	1	K34709MBS	1
K34209MBB	1	K34210MBB	1	K34709MBB	1
K34209MCI	1	K34210MCI	1	K34709MCI	1
K34209MSP	1	K34210MSP	1	K34709MSP	1
K34209MST	1	K34210MST	1	K34709MST	1
K34209NBO	1	K34210NBO	1	K34709NBO	1
K34209NCH	1	K34210NCH	1	K34709NCH	1
K34209NDH	1	K34210NDH	1	K34709NDH	1
K34209NDW	1	K34210NDW	1	K34709NDW	1

MOUNTING BOXES
47mm
858ZIC
DIMENSIONS
177.8 x 150.5mm
BS 5733:2010

MOUNTING BOXES
47mm
869ZIC
DIMENSIONS
177.8 x 210.8mm
BS 5733:2010

MOUNTING BOXES
47mm
878ZIC
DIMENSIONS
146 x 86mm
FIXING CENTRES
120.6mm
BS EN 61558-2-5:1998

Elements

Connection Units

High Current Switches

	SWITCHED 13 AMP	SWITCHED WITH FLEX OUTLET & NEON 13 AMP	UNSWITCHED WITH FLEX OUTLET & NEON 13 AMP	1 GANG DP WITH NEON 32 AMP
SYNTHETIC FINISHES				
CHALK WHITE – SCW	K34941SCW 1	K34971SCW 1	K34978SCW 1	K34305SCW 1
NATURAL STONE – SNS	K34941SNS 1	K34971SNS 1	K34978SNS 1	K34305SNS 1
BEACH PEBBLE – SBP	K34941SBP 1	K34971SBP 1	K34978SBP 1	K34305SBP 1
GLASS EFFECT FINISHES				
ICE WHITE – GIW	K34941GIW 1	K34971GIW 1	K34978GIW 1	K34305GIW 1
POLISHED JADE – GPJ	K34941GPJ 1	K34971GPJ 1	K34978GPJ 1	K34305GPJ 1
POLISHED ONYX – GPO	K34941GPO 1	K34971GPO 1	K34978GPO 1	K34305GPO 1
POLISHED STONE – GPS	K34941GPS 1	K34971GPS 1	K34978GPS 1	K34305GPS 1
METALLIC FINISHES				
BRUSHED STEEL – MBS	K34941MBS 1	K34971MBS 1	K34978MBS 1	K34305MBS 1
BRUSHED BRONZE – MBB	K34941MBB 1	K34971MBB 1	K34978MBB 1	K34305MBB 1
CAST IRON – MCI	K34941MCI 1	K34971MCI 1	K34978MCI 1	K34305MCI 1
SATIN PLATINUM – MSP	K34941MSP 1	K34971MSP 1	K34978MSP 1	K34305MSP 1
SATIN TITANIUM – MST	K34941MST 1	K34971MST 1	K34978MST 1	K34305MST 1
NATURAL FINISHES				
BRITISH OAK – NBO	K34941NBO 1	K34971NBO 1	K34978NBO 1	K34305NBO 1
CREAM HIDE – NCH	K34941NCH 1	K34971NCH 1	K34978NCH 1	K34305NCH 1
DARK HIDE – NDH	K34941NDH 1	K34971NDH 1	K34978NDH 1	K34305NDH 1
DARK WENGE – NDW	K34941NDW 1	K34971NDW 1	K34978NDW 1	K34305NDW 1

LEAD TIMES
Please contact our Customer Services Department on
01268 563 404

MOUNTING BOXES
35mm
866ZIC
46mm
877ZIC
DIMENSIONS
86 x 86mm
FIXING CENTRES
60.3mm
BS1363-4:1995

MOUNTING BOXES
35mm
866ZIC
46mm
877ZIC
DIMENSIONS
86 x 86mm
FIXING CENTRES
60.3mm
BS1363-4:1995

MOUNTING BOXES
35mm
866ZIC
46mm
877ZIC
DIMENSIONS
86 x 86mm
FIXING CENTRES
60.3mm
BS1363-4:1995

MOUNTING BOXES
46mm
877ZIC
DIMENSIONS
86 x 86mm
FIXING CENTRES
60.3mm
BSEN60669-1:1999

DP Switches are not recommended for switching large banks of PCs.

Elements

1 GANG DP 50 AMP	1 GANG DP MARKED "COOKER" 50 AMP	1 GANG DP WITH NEON 50 AMP	1 GANG DP WITH NEON MARKED "COOKER" 50 AMP	3 Pole Fan Isolator 10 AMP
K34337SCW 1	K34337CKSCW 1	K34337NSCW 1	K34337NCKSCW 1	K34859SCW 1
K34337SNS 1	K34337CKSNS 1	K34337NSNS 1	K34337NCKSNS 1	K34859SNS 1
K34337SBP 1	K34337CKSBP 1	K34337NSBP 1	K34337NCKSBP 1	K34859SBP 1
K34337GIW 1	K34337CKGIW 1	K34337NGIW 1	K34337NCKGIW 1	K34859GIW 1
K34337GPJ 1	K34337CKGPJ 1	K34337NGPJ 1	K34337NCKGPJ 1	K34859GPJ 1
K34337GPO 1	K34337CKGPO 1	K34337NGPO 1	K34337NCKGPO 1	K34859GPO 1
K34337GPS 1	K34337CKGPS 1	K34337NGPS 1	K34337NCKGPS 1	K34859GPS 1
K34337MBS 1	K34337CKMBS 1	K34337NMBS 1	K34337NCKMBS 1	K34859MBS 1
K34337MBB 1	K34337CKMBB 1	K34337NMBB 1	K34337NCKMBB 1	K34859MBB 1
K34337MCI 1	K34337CKMCI 1	K34337NMCI 1	K34337NCKMCI 1	K34859MCI 1
K34337MSP 1	K34337CKMSP 1	K34337NMSP 1	K34337NCKMSP 1	K34859MSP 1
K34337MST 1	K34337CKMST 1	K34337NMST 1	K34337NCKMST 1	K34859MST 1
K34337NBO 1	K34337CKNBO 1	K34337NNBO 1	K34337NCKNBO 1	K34859NBO 1
K34337NCH 1	K34337CKNCH 1	K34337NNCH 1	K34337NCKNCH 1	K34859NCH 1
K34337NDH 1	K34337CKNDH 1	K34337NNDH 1	K34337NCKNDH 1	K34859NDH 1
K34337NDW 1	K34337CKNDW 1	K34337NNDW 1	K34337NCKNDW 1	K34859NDW 1
MOUNTING BOXES 46mm 877ZIC **DIMENSIONS** 86 x 86mm **FIXING CENTRES** 60.3mm BS EN 60669-1:1999	**MOUNTING BOXES** 46mm 877ZIC **DIMENSIONS** 86 x 86mm **FIXING CENTRES** 60.3mm BS EN 60669-1:1999	**MOUNTING BOXES** 46mm 877ZIC **DIMENSIONS** 86 x 86mm **FIXING CENTRES** 60.3mm BS EN 60669-1:1999	**MOUNTING BOXES** 46mm 877ZIC **DIMENSIONS** 86 x 86mm **FIXING CENTRES** 60.3mm BS EN 60669-1:1999	**MOUNTING BOXES** 46mm 877ZIC **DIMENSIONS** 86 x 86mm **FIXING CENTRES** 60.3mm BS EN 60669-2-4 K4858 switchlock is suitable for this product

DP Switches are not recommended for switching large banks of PCs.

Elements

	Electronic Switches			Electronic Dimmers
	1 GANG SINGLE 2 WAY SP 400W	1 GANG DOUBLE 2 WAY SP 2 X 400W	1 GANG SINGLE 1 WAY SP 10AX	2 WAY SINGLE 60-500W/400VA 6-150W LED LEADING EDGE
SYNTHETIC FINISHES				
CHALK WHITE – SCW	K34371SCW 1	K34372SCW 1	K34370SCW 1	K34100SCW 1
NATURAL STONE – SNS	K34371SNS 1	K34372SNS 1	K34370SNS 1	K34100SNS 1
BEACH PEBBLE – SBP	K34371SBP 1	K34372SBP 1	K34370SBP 1	K34100SBP 1
GLASS EFFECT FINISHES				
ICE WHITE – GIW	K34371GIW 1	K34372GIW 1	K34370GIW 1	K34100GIW 1
POLISHED JADE – GPJ	K34371GPJ 1	K34372GPJ 1	K34370GPJ 1	K34100GPJ 1
POLISHED ONYX – GPO	K34371GPO 1	K34372GPO 1	K34370GPO 1	K34100GPO 1
POLISHED STONE – GPS	K34371GPS 1	K34372GPS 1	K34370GPS 1	K34100GPS 1
METALLIC FINISHES				
BRUSHED STEEL – MBS	K34371MBS 1	K34372MBS 1	K34370MBS 1	K34100MBS 1
BRUSHED BRONZE – MBB	K34371MBB 1	K34372MBB 1	K34370MBB 1	K34100MBB 1
CAST IRON – MCI	K34371MCI 1	K34372MCI 1	K34370MCI 1	K34100MCI 1
SATIN PLATINUM – MSP	K34371MSP 1	K34372MSP 1	K34370MSP 1	K34100MSP 1
SATIN TITANIUM – MST	K34371MST 1	K34372MST 1	K34370MST 1	K34100MST 1
NATURAL FINISHES				
BRITISH OAK – NBO	K34371NBO 1	K34372NBO 1	K34370NBO 1	K34100NBO 1
CREAM HIDE – NCH	K34371NCH 1	K34372NCH 1	K34370NCH 1	K34100NCH 1
DARK HIDE – NDH	K34371NDH 1	K34372NDH 1	K34370NDH 1	K34100NDH 1
DARK WENGE – NDW	K34371NDW 1	K34372NDW 1	K34370NDW 1	K34100NDW 1

LEAD TIMES
Please contact our Customer Services Department on
01268 563 404

MOUNTING BOXES
35mm
866ZIC
46mm
877ZIC
DIMENSIONS
86 x 86mm
FIXING CENTRES
60.3mm
BS EN 60669-2-1:2004

MOUNTING BOXES
35mm
866ZIC
46mm
877ZIC
DIMENSIONS
86 x 86mm
FIXING CENTRES
60.3mm
BS EN 60669-2-1:2004

MOUNTING BOXES
35mm
866ZIC
46mm
877ZIC
DIMENSIONS
86 x 86mm
FIXING CENTRES
60.3mm
BS EN 60669-2-1:2004

MOUNTING BOXES
35mm
866ZIC
46mm
877ZIC
DIMENSIONS
86 x 86mm
FIXING CENTRES
60.3mm
BS EN 60669-2-1:2004

Elements

2 WAY SINGLE 40-300W/240VA 6-120W LED LEADING EDGE		2 WAY DOUBLE 40-300W/240VA 6-120W LED FOR EACH DIMMER LEADING EDGE		2 WAY SINGLE 25-500W/400VA TRAILING EDGE		2 WAY SINGLE 25-300W/240VA TRAILING EDGE	
K34101SCW	1	K34102SCW	1	K34103SCW	1	K34104SCW	1
K34101SNS	1	K34102SNS	1	K34103SNS	1	K34104SNS	1
K34101SBP	1	K34102SBP	1	K34103SBP	1	K34104SBP	1
K34101GIW	1	K34102GIW	1	K34103GIW	1	K34104GIW	1
K34101GPJ	1	K34102GPJ	1	K34103GPJ	1	K34104GPJ	1
K34101GPO	1	K34102GPO	1	K34103GPO	1	K34104GPO	1
K34101GPS	1	K34102GPS	1	K34103GPS	1	K34104GPS	1
K34101MBS	1	K34102MBS	1	K34103MBS	1	K34104MBS	1
K34101MBB	1	K34102MBB	1	K34103MBB	1	K34104MBB	1
K34101MCI	1	K34102MCI	1	K34103MCI	1	K34104MCI	1
K34101MSP	1	K34102MSP	1	K34103MSP	1	K34104MSP	1
K34101MST	1	K34102MST	1	K34103MST	1	K34104MST	1
K34101NBO	1	K34102NBO	1	K34103NBO	1	K34104NBO	1
K34101NCH	1	K34102NCH	1	K34103NCH	1	K34104NCH	1
K34101NDH	1	K34102NDH	1	K34103NDH	1	K34104NDH	1
K34101NDW	1	K34102NDW	1	K34103NDW	1	K34104NDW	1
MOUNTING BOXES **35mm** 866ZIC **46mm** 877ZIC **DIMENSIONS** 86 x 86mm **FIXING CENTRES** 60.3mm BS EN 60669-2-1:2004		**MOUNTING BOXES** **35mm** 866ZIC **46mm** 877ZIC **DIMENSIONS** 86 x 86mm **FIXING CENTRES** 60.3mm BS EN 60669-2-1:2004		**MOUNTING BOXES** **35mm** 866ZIC **46mm** 877ZIC **DIMENSIONS** 86 x 86mm **FIXING CENTRES** 60.3mm BS EN 60669-2-1:2004		**MOUNTING BOXES** **35mm** 866ZIC **46mm** 877ZIC **DIMENSIONS** 86 x 86mm **FIXING CENTRES** 60.3mm BS EN 60669-2-1:2004	

Elements

	Electronic Dimmers		Rotary Dimmers		Grid Modular Frontplates
	2 WAY DOUBLE 25-300W/240VA TRAILING EDGE	1 WAY 6AX 1-10V	2 WAY SINGLE 230V A.C. 50HZ 60W/VA MIN. - 500W/400VA MAX	2 WAY DOUBLE 230V A.C. 50HZ 40W/VA MIN. - 300W/240VA MAX. FOR EACH DIMMER	1 MODULE
SYNTHETIC FINISHES					
CHALK WHITE – SCW	K34105SCW 1	K34499SCW 1	K34301SCW 1	K34522SCW 1	K35131SCW 1
NATURAL STONE – SNS	K34105SNS 1	K34499SNS 1	K34301SNS 1	K34522SNS 1	K35131SNS 1
BEACH PEBBLE – SBP	K34105SBP 1	K34499SBP 1	K34301SBP 1	K34522SBP 1	K35131SBP 1
GLASS EFFECT FINISHES					
ICE WHITE – GIW	K34105GIW 1	K34499GIW 1	K34301GIW 1	K34522GIW 1	K35131GIW 1
POLISHED JADE – GPJ	K34105GPJ 1	K34499GPJ 1	K34301GPJ 1	K34522GPJ 1	K35131GPJ 1
POLISHED ONYX – GPO	K34105GPO 1	K34499GPO 1	K34301GPO 1	K34522GPO 1	K35131GPO 1
POLISHED STONE – GPS	K34105GPS 1	K34499GPS 1	K34301GPS 1	K34522GPS 1	K35131GPS 1
METALLIC FINISHES					
BRUSHED STEEL – MBS	K34105MBS 1	K34499MBS 1	K34301MBS 1	K34522MBS 1	K35131MBS 1
BRUSHED BRONZE – MBB	K34105MBB 1	K34499MBB 1	K34301MBB 1	K34522MBB 1	K35131MBB 1
CAST IRON – MCI	K34105MCI 1	K34499MCI 1	K34301MCI 1	K34522MCI 1	K35131MCI 1
SATIN PLATINUM – MSP	K34105MSP 1	K34499MSP 1	K34301MSP 1	K34522MSP 1	K35131MSP 1
SATIN TITANIUM – MST	K34105MST 1	K34499MST 1	K34301MST 1	K34522MST 1	K35131MST 1
NATURAL FINISHES					
BRITISH OAK – NBO	K34105NBO 1	K34499NBO 1	K34301NBO 1	K34522NBO 1	K35131NBO 1
CREAM HIDE – NCH	K34105NCH 1	K34499NCH 1	K34301NCH 1	K34522NCH 1	K35131NCH 1
DARK HIDE – NDH	K34105NDH 1	K34499NDH 1	K34301NDH 1	K34522NDH 1	K35131NDH 1
DARK WENGE – NDW	K34105NDW 1	K34499NDW 1	K34301NDW 1	K34522NDW 1	K35131NDW 1

LEAD TIMES
Please contact our Customer Services Department on
01268 563 404

MOUNTING BOXES
35mm
866ZIC
46mm
877ZIC
DIMENSIONS
86 x 86mm
FIXING CENTRES
60.3mm
BS EN 60669-2-1:2004

MOUNTING BOXES
35mm
866ZIC
46mm
877ZIC
DIMENSIONS
86 x 86mm
FIXING CENTRES
60.3mm
BS EN 60669-2-1:2004

MOUNTING BOXES
35mm
866ZIC
46mm
877ZIC
DIMENSIONS
86 x 86mm
FIXING CENTRES
60.3mm
BS EN 60669-2-1:2004

MOUNTING BOXES
35mm
866ZIC
46mm
877ZIC
DIMENSIONS
86 x 86mm
FIXING CENTRES
60.3mm
BS EN 60669-2-1:2004

MOUNTING BOXES
35mm
866ZIC
DIMENSIONS
86 x 86mm
FIXING CENTRES
60.3mm
BS5733:2010

Includes mounting frame

Elements

Grid Modules

2 MODULE		3 MODULE		4 MODULE		1 WAY SP 10 AMP		1 WAY SP LED LOCATOR 10 AMP	
				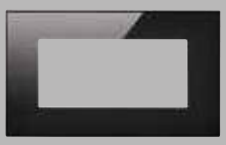					
K35132SCW	1	K35133SCW	1	K35134SCW	1				
K35132SNS	1	K35133SNS	1	K35134SNS	1				
K35132SBP	1	K35133SBP	1	K35134SBP	1				
K35132GIW	1	K35133GIW	1	K35134GIW	1				
K35132GPJ	1	K35133GPJ	1	K35134GPJ	1				
K35132GPO	1	K35133GPO	1	K35134GPO	1				
K35132GPS	1	K35133GPS	1	K35134GPS	1				
						K34881SCW	1	K34881NSCW	1
K35132MBS	1	K35133MBS	1	K35134MBS	1	K34881SNS	1	K34881NSNS	1
K35132MBB	1	K35133MBB	1	K35134MBB	1	K34881SBP	1	K34881NSBP	1
K35132MCI	1	K35133MCI	1	K35134MCI	1	K34881BLK	1	K34881NBLK	1
K35132MSP	1	K35133MSP	1	K35134MSP	1				
K35132MST	1	K35133MST	1	K35134MST	1				
K35132NBO	1	K35133NBO	1	K35134NBO	1				
K35132NCH	1	K35133NCH	1	K35134NCH	1				
K35132NDH	1	K35133NDH	1	K35134NDH	1				
K35132NDW	1	K35133NDW	1	K35134NDW	1				

MOUNTING BOXES
35mm
866ZIC
DIMENSIONS
86 x 86mm
FIXING CENTRES
60.3mm
BS5733:2010

MOUNTING BOXES
35mm
886ZIC
DIMENSIONS
86 x 146mm
FIXING CENTRES
120.6mm
BS5733:2010

MOUNTING BOXES
35mm
886ZIC
DIMENSIONS
86 x 146mm
FIXING CENTRES
120.6mm
BS5733:2010

These switches do NOT have to be derated when used with fluorescent or inductive loads.
BS EN 60669-1:1999

These switches do NOT have to be derated when used with fluorescent or inductive loads.
BS EN 60669-1:1999

Includes mounting frame

Elements

Grid Modules

	1 WAY SP WIDE ROCKER 10 AMP		1 WAY SP WIDE ROCKER LED LOCATOR 10 AMP		2 WAY SP 10 AMP		2 WAY SP LED LOCATOR 10 AMP	
SYNTHETIC FINISHES								
CHALK WHITE – SCW	**K34981SCW**	1	**K34981NSCW**	1	**K34882SCW**	1	**K34882NSCW**	1
NATURAL STONE – SNS	**K34981SNS**	1	**K34981NSNS**	1	**K34882SNS**	1	**K34882NSNS**	1
BEACH PEBBLE – SBP	**K34981SBP**	1	**K34981NSBP**	1	**K34882SBP**	1	**K34882NSBP**	1
BLACK – BLK	**K34981BLK**	1	**K34981NBLK**	1	**K34882BLK**	1	**K34882NBLK**	1

LEAD TIMES
Please contact our Customer Services Department on
01268 563 404

These switches do NOT have to be derated when used with fluorescent or inductive loads.
BS EN 60669-1:1999

These switches do NOT have to be derated when used with fluorescent or inductive loads.
BS EN 60669-1:1999

These switches do NOT have to be derated when used with fluorescent or inductive loads.
BS EN 60669-1:1999

These switches do NOT have to be derated when used with fluorescent or inductive loads.
BS EN 60669-1:1999

Elements

2 WAY SP WIDE ROCKER 10 AMP	2 WAY SP WIDE ROCKER LED LOCATOR 10 AMP	2 WAY SP RETRACTIVE MARKED 'PRESS' 10 AMP	2 WAY SP WIDE ROCKER RETRACTIVE MARKED 'PRESS' 10 AMP
K34982SCW 1	K34982NSCW 1	K34910SCW 1	K34911SCW 1
K34982SNS 1	K34982NSNS 1	K34910SNS 1	K34911SNS 1
K34982SBP 1	K34982NSBP 1	K34910SBP 1	K34911SBP 1
K34982BLK 1	K34982NBLK 1	K34910BLK 1	K34911BLK 1
These switches do NOT have to be derated when used with fluorescent or inductive loads. BS EN 60669-1:1999	These switches do NOT have to be derated when used with fluorescent or inductive loads. BS EN 60669-1:1999	**NOTE** Push switches are not designed for flourescent loads. BS EN 60669-1:1999	**NOTE** Push switches are not designed for flourescent loads. BS EN 60669-1:1999

Elements

Grid Modules

	2 WAY SP RETRACTIVE MARKED WITH BELL SYMBOL 10 AMP	2 WAY SP WIDE ROCKER RETRACTIVE MARKED WITH BELL SYMBOL 10 AMP	2 WAY SP RETRACTIVE PUSH 10 AMP	2 WAY SP WIDE ROCKER RETRACTIVE PUSH 10 AMP
SYNTHETIC FINISHES				
CHALK WHITE – SCW	**K34885BSCW** 1	**K34985BSCW** 1	**K34885SCW** 1	**K34985SCW** 1
NATURAL STONE – SNS	**K34885BSNS** 1	**K34985BSNS** 1	**K34885SNS** 1	**K34985SNS** 1
BEACH PEBBLE – SBP	**K34885BSBP** 1	**K34985BSBP** 1	**K34885SBP** 1	**K34985SBP** 1
BLACK – BLK	**K34885BBLK** 1	**K34985BBLK** 1	**K34885BLK** 1	**K34985BLK** 1

LEAD TIMES
Please contact our Customer Services Department on
01268 563 404

NOTE
Push switches are not designed for flourescent loads.
BS EN 60669-1:1999

NOTE
Push switches are not designed for flourescent loads.
BS EN 60669-1:1999

NOTE
Push switches are not designed for flourescent loads.
BS EN 60669-1:1999

NOTE
Push switches are not designed for flourescent loads.
BS EN 60669-1:1999

Elements

2 WAY CENTRE OFF RETRACTIVE 10 AMP	2 WAY WIDE ROCKER CENTRE OFF RETRACTIVE 10 AMP	WIDE ROCKER INTERMEDIATE 10 AMP	1 WAY SP 20 AMP	1 WAY SP LED LOCATOR 20 AMP
K34900SCW 1	K34901SCW 1	K34993SCW 1	K34891SCW 1	K34891NSCW 1
K34900SNS 1	K34901SNS 1	K34993SNS 1	K34891SNS 1	K34891NSNS 1
K34900SBP 1	K34901SBP 1	K34993SBP 1	K34891SBP 1	K34891NSBP 1
K34900BLK 1	K34901BLK 1	K34993BLK 1	K34891BLK 1	K34891NBLK 1
NOTE Push switches are not designed for flourescent loads. BS EN 60669-1:1999	NOTE Push switches are not designed for flourescent loads. BS EN 60669-1:1999	These switches do NOT have to be derated when used with fluorescent or inductive loads. BS EN 60669-1:1999	These switches do NOT have to be derated when used with fluorescent or inductive loads BS EN 60669-1:1999	These switches do NOT have to be derated when used with fluorescent or inductive loads. BS EN 60669-1:1999

Elements

Grid Modules

	1 WAY SP WIDE ROCKER 20 AMP		1 WAY SP WIDE ROCKER LED LOCATOR 20 AMP		2 WAY SP 20 AMP		2 WAY SP LED LOCATOR 20 AMP	
SYNTHETIC FINISHES								
CHALK WHITE – SCW	**K34991SCW**	1	**K34991NSCW**	1	**K34892SCW**	1	**K34892NSCW**	1
NATURAL STONE – SNS	**K34991SNS**	1	**K34991NSNS**	1	**K34892SNS**	1	**K34892NSNS**	1
BEACH PEBBLE – SBP	**K34991SBP**	1	**K34991NSBP**	1	**K34892SBP**	1	**K34892NSBP**	1
BLACK – BLK	**K34991BLK**	1	**K34991NBLK**	1	**K34892BLK**	1	**K34892NBLK**	1

LEAD TIMES
Please contact our Customer Services Department on
01268 563 404

These switches do NOT have to be derated when used with fluorescent or inductive loads BS EN 60669-1:1999

These switches do NOT have to be derated when used with fluorescent or inductive loads BS EN 60669-1:1999

These switches do NOT have to be derated when used with fluorescent or inductive loads BS EN 60669-1:1999

These switches do NOT have to be derated when used with fluorescent or inductive loads BS EN 60669-1:1999

Elements

2 WAY SP WIDE ROCKER 20 AMP		2 WAY SP WIDE ROCKER LED LOCATOR 20 AMP		INTERMEDIATE 20 AMP		INTERMEDIATE LED LOCATOR 20 AMP	
K34992SCW	1	**K34992NSCW**	1	**K34894SCW**	1	**K34894NSCW**	1
K34992SNS	1	**K34992NSNS**	1	**K34894SNS**	1	**K34894NSNS**	1
K34992SBP	1	**K34992NSBP**	1	**K34894SBP**	1	**K34894NSBP**	1
K34992BLK	1	**K34992NBLK**	1	**K34894BLK**	1	**K34894NBLK**	1
These switches do NOT have to be derated when used with fluorescent or inductive loads BS EN 60669-1:1999		These switches do NOT have to be derated when used with fluorescent or inductive loads BS EN 60669-1:1999		These switches do NOT have to be derated when used with fluorescent or inductive loads BS EN 60669-1:1999		These switches do NOT have to be derated when used with fluorescent or inductive loads BS EN 60669-1:1999	

Elements

Grid Modules

SYNTHETIC FINISHES	WIDE ROCKER INTERMEDIATE LED LOCATOR 20 AMP		1 WAY DP 20 AMP		1 WAY DP LED LOCATOR 20 AMP		1 WAY DP WIDE ROCKER 20 AMP	
CHALK WHITE – SCW	K34994NSCW	1	K34896SCW	1	K34896NSCW	1	K34996SCW	1
NATURAL STONE – SNS	K34994NSNS	1	K34896SNS	1	K34896NSNS	1	K34996SNS	1
BEACH PEBBLE – SBP	K34994NSBP	1	K34896SBP	1	K34896NSBP	1	K34996SBP	1
BLACK – BLK	K34994NBLK	1	K34896BLK	1	K34896NBLK	1	K34996BLK	1

LEAD TIMES
Please contact our Customer Services Department on
01268 563 404

These switches do NOT have to be derated when used with fluorescent or inductive loads BS EN 60669-1:1999

These switches do NOT have to be derated when used with fluorescent or inductive loads BS EN 60669-1:1999

These switches do NOT have to be derated when used with fluorescent or inductive loads BS EN 60669-1:1999

These switches do NOT have to be derated when used with fluorescent or inductive loads BS EN 60669-1:1999

2 WAY WIDE ROCKER LED LOCATOR 20 AMP		FUSE UNIT 13 AMP		BLANK INSERT	
K34992NSCW	1	**K34890SCW**	1	**K34880SCW**	1
K34992NSNS	1	**K34890SNS**	1	**K34880SNS**	1
K34992NSBP	1	**K34890SBP**	1	**K34880SBP**	1
K34992NBLK	1	**K34890BLK**	1	**K34880BLK**	1
These switches do NOT have to be derated when used with fluorescent or inductive loads BS EN 60669-1:1999		BS5733:2010		BS5733:2010	

Elements

	Euro Modular Frontplates						Wireless Transmitters for Echo™	
	1 MODULE 25 X 50MM		2 MODULE 50 X 50MM		4 MODULE 100 X 50MM		1 CHANNEL	
					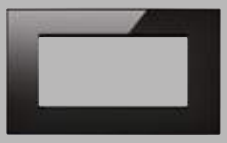			
SYNTHETIC FINISHES								
CHALK WHITE – SCW	K35111SCW	1	K35112SCW	1	K35114SCW	1	K35208SCW	1
NATURAL STONE – SNS	K35111SNS	1	K35112SNS	1	K35114SNS	1	K35208SNS	1
BEACH PEBBLE – SBP	K35111SBP	1	K35112SBP	1	K35114SBP	1	K35208SBP	1
GLASS EFFECT FINISHES								
ICE WHITE – GIW	K35111GIW	1	K35112GIW	1	K35114GIW	1	K35208GIW	1
POLISHED JADE – GPJ	K35111GPJ	1	K35112GPJ	1	K35114GPJ	1	K35208GPJ	1
POLISHED ONYX – GPO	K35111GPO	1	K35112GPO	1	K35114GPO	1	K35208GPO	1
POLISHED STONE – GPS	K35111GPS	1	K35112GPS	1	K35114GPS	1	K35208GPS	1
METALLIC FINISHES								
BRUSHED STEEL – MBS	K35111MBS	1	K35112MBS	1	K35114MBS	1	K35208MBS	1
BRUSHED BRONZE – MBB	K35111MBB	1	K35112MBB	1	K35114MBB	1	K35208MBB	1
CAST IRON – MCI	K35111MCI	1	K35112MCI	1	K35114MCI	1	K35208MCI	1
SATIN PLATINUM – MSP	K35111MSP	1	K35112MSP	1	K35114MSP	1	K35208MSP	1
SATIN TITANIUM – MST	K35111MST	1	K35112MST	1	K35114MST	1	K35208MST	1
NATURAL FINISHES								
BRITISH OAK – NBO	K35111NBO	1	K35112NBO	1	K35114NBO	1	K35208NBO	1
CREAM HIDE – NCH	K35111NCH	1	K35112NCH	1	K35114NCH	1	K35208NCH	1
DARK HIDE – NDH	K35111NDH	1	K35112NDH	1	K35114NDH	1	K35208NDH	1
DARK WENGE – NDW	K35111NDW	1	K35112NDW	1	K35114NDW	1	K35208NDW	1

LEAD TIMES
Please contact our Customer Services Department on
01268 563 404

MOUNTING BOXES
Suitable for flush boxes to BS 4662:2006 and surface boxes to BS 5733:2010
Refer to appropriate module for minimum box depth.
DIMENSIONS
86 x 86mm
FIXING CENTRES
60.3mm
BS 5733:2010 where applicable.

MOUNTING BOXES
Suitable for flush boxes to BS 4662:2006 and surface boxes to BS 5733:2010
Refer to appropriate module for minimum box depth.
DIMENSIONS
86 x 86mm
FIXING CENTRES
60.3mm
BS 5733:2010 where applicable.

MOUNTING BOXES
Suitable for flush boxes to BS 4662:2006 and surface boxes to BS 5733:2010
Refer to appropriate module for minimum box depth.
DIMENSIONS
86 x 146mm
FIXING CENTRES
120.6mm
BS 5733:2010 where applicable.

MOUNTING BOXES
35mm
866ZIC
46mm
877ZIC
DIMENSIONS
86 x 86mm
FIXING CENTRES
60.3mm
OPERATING FREQUENCY
868.3Mhz
ETSI EN 301 489-1 + -3 :
ETSI EN 300 220-3

No grid required, modules just clip into place

Elements

2 CHANNEL		1 CHANNEL WITH SYMBOLS		2 CHANNEL WITH SYMBOLS	
K35209SCW	1	K35206SCW	1	K35207SCW	1
K35209SNS	1	K35206SNS	1	K35207SNS	1
K35209SBP	1	K35206SBP	1	K35207SBP	1
K35209GIW	1	K35206GIW	1	K35207GIW	1
K35209GPJ	1	K35206GPJ	1	K35207GPJ	1
K35209GPO	1	K35206GPO	1	K35207GPO	1
K35209GPS	1	K35206GPS	1	K35207GPS	1
K35209MBS	1	K35206MBS	1	K35207MBS	1
K35209MBB	1	K35206MBB	1	K35207MBB	1
K35209MCI	1	K35206MCI	1	K35207MCI	1
K35209MSP	1	K35206MSP	1	K35207MSP	1
K35209MST	1	K35206MST	1	K35207MST	1
K35209NBO	1	K35206NBO	1	K35207NBO	1
K35209NCH	1	K35206NCH	1	K35207NCH	1
K35209NDH	1	K35206NDH	1	K35207NDH	1
K35209NDW	1	K35206NDW	1	K35207NDW	1

MOUNTING BOXES
35mm
866ZIC
46mm
877ZIC
DIMENSIONS
86 x 86mm
FIXING CENTRES
60.3mm
ETSI EN 301489-1/3
ETSI EN 300220-1/2

MOUNTING BOXES
35mm
866ZIC
46mm
877ZIC
DIMENSIONS
86 x 86mm
FIXING CENTRES
60.3mm
ETSI EN 301489-1/3
ETSI EN 300220-1/2

MOUNTING BOXES
35mm
866ZIC
46mm
877ZIC
DIMENSIONS
86 x 86mm
FIXING CENTRES
60.3mm
ETSI EN 301489-1/3
ETSI EN 300220-1/2

Elements

Other Switch Products

	ROLLER SHUTTER/BLIND CONTROL 10 AMP	3 GANG 2 WAY SP 20 AMP	DO NOT DISTURB / MAKE UP ROOM SWITCH	BELL PUSH DO NOT DISTURB / MAKE UP ROOM SWITCH	PIR DETECTOR	KEY CARD SWITCH 50/60HZ 2 WAY 30 SEC OFF DELAY
SYNTHETIC FINISHES						
CHALK WHITE – SCW	K35203SCW 1	K34373SCW 1	K33900DNDSCW 1	K33885DNDSCW 1	K35202SCW 1	K35201SCW 1
NATURAL STONE – SNS	K35203SNS 1	K34373SNS 1	K33900DNDSNS 1	K33885DNDSNS 1	K35202SNS 1	K35201SNS 1
BEACH PEBBLE – SBP	K35203SBP 1	K34373SBP 1	K33900DNDSBP 1	K33885DNDSBP 1	K35202SBP 1	K35201SBP 1
GLASS EFFECT FINISHES						
ICE WHITE – GIW	K35203GIW 1	K34373GIW 1	K33900DNDGIW 1	K33885DNDGIW 1	K35202GIW 1	K35201GIW 1
POLISHED JADE – GPJ	K35203GPJ 1	K34373GPJ 1	K33900DNDGPJ 1	K33885DNDGPJ 1	K35202GPJ 1	K35201GPJ 1
POLISHED ONYX – GPO	K35203GPO 1	K34373GPO 1	K33900DNDGPO 1	K33885DNDGPO 1	K35202GPO 1	K35201GPO 1
POLISHED STONE – GPS	K35203GPS 1	K34373GPS 1	K33900DNDGPS 1	K33885DNDGPS 1	K35202GPS 1	K35201GPS 1
METALLIC FINISHES						
BRUSHED STEEL – MBS	K35203MBS 1	K34373MBS 1	K33900DNDMBS 1	K33885DNDMBS 1	K35202MBS 1	K35201MBS 1
BRUSHED BRONZE – MBB	K35203MBB 1	K34373MBB 1	K33900DNDMBB 1	K33885DNDMBB 1	K35202MBB 1	K35201MBB 1
CAST IRON – MCI	K35203MCI 1	K34373MCI 1	K33900DNDMCI 1	K33885DNDMCI 1	K35202MCI 1	K35201MCI 1
SATIN PLATINUM – MSP	K35203MSP 1	K34373MSP 1	K33900DNDMSP 1	K33885DNDMSP 1	K35202MSP 1	K35201MSP 1
SATIN TITANIUM – MST	K35203MST 1	K34373MST 1	K33900DNDMST 1	K33885DNDMST 1	K35202MST 1	K35201MST 1
NATURAL FINISHES						
BRITISH OAK – NBO	K35203NBO 1	K34373NBO 1	K33900DNDNBO 1	K33885DNDNBO 1	K35202NBO 1	K35201NBO 1
CREAM HIDE – NCH	K35203NCH 1	K34373NCH 1	K33900DNDNCH 1	K33885DNDNCH 1	K35202NCH 1	K35201NCH 1
DARK HIDE – NDH	K35203NDH 1	K34373NDH 1	K33900DNDNDH 1	K33885DNDNDH 1	K35202NDH 1	K35201NDH 1
DARK WENGE – NDW	K35203NDW 1	K34373NDW 1	K33900DNDNDW 1	K33885DNDNDW 1	K35202NDW 1	K35201NDW 1

LEAD TIMES
Please contact our Customer Services Department on
01268 563 404

MOUNTING BOXES
35mm
866ZIC
47mm
877ZIC
IEC 60669-1

MOUNTING BOXES
35mm
866ZIC
46mm
877ZIC
DIMENSIONS
86 x 86mm
FIXING CENTRES
60.3mm
These switches do NOT have to be derated when used with fluorescent or inductive loads
BS EN 60669-1:1999

MOUNTING BOXES
35mm
866ZIC
46mm
877ZIC
DIMENSIONS
86 x 86mm
FIXING CENTRES
60.3mm
BS EN 60669-1:1999

MOUNTING BOXES
35mm
866ZIC
46mm
877ZIC
DIMENSIONS
86 x 86mm
FIXING CENTRES
60.3mm
BS EN 60669-1:1999

MOUNTING BOXES
35mm
866ZIC
46mm
877ZIC
DIMENSIONS
86 x 86mm
FIXING CENTRES
60.3mm
IEC 60669-2-1

MOUNTING BOXES
35mm
866ZIC
46mm
877ZIC
DIMENSIONS
86 x 86mm
FIXING CENTRES
60.3mm
IEC 60669-2-1

Elements

Euro Modules

SYNTHETIC FINISHES	RJ11/12 1 MODULE 25 X 50MM		RJ45 CAT 6 1 MODULE 25 X 50MM		MASTER TELEPHONE 1 MODULE 25 X 50MM		SECONDARY TELEPHONE 1 MODULE 25 X 50MM		SINGLE TV CO-AXIAL NON-ISOLATED (IEC MALE) 1 MODULE 25 X 50MM	
CHALK WHITE – SCW	K5887SCW	5	K5846SCW	5	K5820SCW	5	K5821SCW	5	K5850SCW	5
NATURAL STONE – SNS	K5887SNS	5	K5846SNS	5	K5820SNS	5	K5821SNS	5	K5850SNS	5
BEACH PEBBLE – SBP	K5887SBP	5	K5846SBP	5	K5820SBP	5	K5821SBP	5	K5850SBP	5
BLACK – BLK	K5887BLK	5	K5846BLK	5	K5820BLK	5	K5821BLK	5	K5850BLK	5
	Suitable for both RJ11 and RJ12 jacks RJ11; 4 wire RJ12; 6 wire **MOUNTING BOXES** Minimum box depth 25mm FCC68 EN 41003		Cat 6 performance. Suitable for both 568A and 568B wiring schemes. **MOUNTING BOXES** Minimum Box Depth 35mm ISO/IEC 11801 EN 50173 TIA 568 EN 41003		**MOUNTING BOXES** Minimum depth 25mm BS 6312 Pt 2		**MOUNTING BOXES** Minimum depth 25mm BS 6312 Pt 2		Fully screened non isolated single TV outlets for connection to a single TV co-axial lead. **MOUNTING BOXES** Min box depth 32mm BS 3041:1997 IEC 169-2:1965 BS EN 50083 & BS 5733:2010 where applicable	

Elements

Euro Modules

	SINGLE OUTLET (IEC FEMALE) 1 MODULE 25 X 50MM	SINGLE F-TYPE SATELLITE SOCKET 1 MODULE 25 X 50MM	TWIN OUTLET TV/FM DIPLEXER 2 MODULE 50 X 50MM	TRIPLE OUTLET TV/FM/SATELLITE TRIPLEXER 2 MODULE 50 X 50MM	QUAD OUTLET TV-FM/DAB-2XSAT 2 MODULE 50 X 50MM
SYNTHETIC FINISHES					
CHALK WHITE – SCW	**K5851SCW** 5	**K5855SCW** 5	**K5852DABSCW** 5	**K5853DABSCW** 5	**K5854DABSCW** 5
NATURAL STONE – SNS	**K5851SNS** 5	**K5855SNS** 5	**K5852DABSNS** 5	**K5853DABSNS** 5	**K5854DABSNS** 5
BEACH PEBBLE – SBP	**K5851SBP** 5	**K5855SBP** 5	**K5852DABSBP** 5	**K5853DABSBP** 5	**K5854DABSBP** 5
BLACK – BLK	**K5851BLK** 5	**K5855BLK** 5	**K5852DABBLK** 5	**K5853DABBLK** 5	**K5854DABBLK** 5

Fully screened non isolated TV outlets containing a combination of single, TV/FM Diplexer and TV/FM/SAT Triplexer for use within digital TV systems and interactive TV services.
Single outlets for connection to a single TV, FM or Satellite co-axial aerial lead.

PERFORMANCE
SINGLE OUTLETS
TV/FM Iec Male Or Female
DC-950MHz
SAT F-TYPE
DC-1.75GHz

MOUNTING BOXES
Min box depth 32mm
BS 3041:1997
IEC 169-2:1965
BS EN 50083 & BS 5733:2010
where applicable

TV/FM/SAT PRODUCTS

Outlet	Diplexer		Outlet	Triplexer
TV	5-65MHz		TV	5-65MHz
	470-862MHz		470-862MHz	
FM/DAB	87.5-108MHz	FM	87.5-108MHz	
SAT	N/A		SAT1	950-2300MHz

TV/FM/DAB/SAT PRODUCTS FOR DIGITAL RADIO

Outlet	Diplexer		Outlet	Triplexer
TV	5-65MHz		TV	5-65MHz
	470-862MHz		470-862MHz	
FM/DAB	87.5-230MHz	FM	87.5-230MHz	
SAT OR SAT1	N/A		SAT1	950-2300MHz
SAT2			SAT2	5-2300MHz

Elements

Euro Power Modules

AMERICAN 127V SHUTTERED 2 MODULE 50 X 50MM (NON UK) 15 AMP	UK 250V SHUTTERED 2 MODULE 50 X 50MM 5 AMP	UK 250V 2 MODULE 50 X 50MM 13 AMP	FRENCH/BELGIAN 2P+E 250V SHUTTERED 2 MODULE 50 X 50MM (NON UK) 16 AMP	FEMALE HDMI OUTLET 2 MODULE 50 X 50MM
K5832SCW 10	K5833SCW 10	K5830SCW 10	K5831SCW 10	K5807SCW 5
K5832SNS 10	K5833SNS 10	K5830SNS 10	K5831SNS 10	K5807SNS 5
K5832SBP 10	K5833SBP 10	K5830SBP 10	K5831SBP 10	K5807SBP 5
K5832BLK 10	K5833BLK 10	K5830BLK 10	K5831BLK 10	K5807BLK 5
MOUNTING BOX 35mm minimum 46mm (for extra wiring space) SASO 2204:2003	**MOUNTING BOX** 35mm minimum 46mm (for extra wiring space) BS 546: 1950	**MOUNTING BOX** 35mm minimum 46mm (for extra wiring space) BS 1363: Pt2: 1995	**MOUNTING BOX** 46mm IEC 60884-1: 2006	K5807 Female HDMI Outlet is HDMI 1.1, 1.2, 1.3 and 1.4 compatible, HDCP compliant. **DATA RATE** Up to 2.25 Gbps **SCAN** Up to 1080p/1920x1200 **INPUT CONNECTOR** 1 x HDMI Female (Type A) **OUTPUT CONNECTOR** 1 x HDMI Female (Type A) Supports high resolution input **PC** VGA, SVGA, SXVGA (1280x1024) and UXGA (1600x1200, 1920x1200) **HDTV** 480p, 720p, 1080i and 1080p HDMI input cable should be no larger than 20m. **MOUNTING BOX** 46mm

Elements

Euro Modules

SYNTHETIC FINISHES	USB CHARGING 2 MODULE 50 X 50MM	RCA TO SCREW TERMINATION SET 1 RED AND 1 BLACK 1 MODULE 25 X 50MM	TERMINATION SET 1 YELLOW, 1 WHITE AND 1 RED 1 MODULE 25 X 50MM	AUDIO BINDING POST FOR SINGLE LOUD SPEAKER 1 MODULE 25 X 50MM	BLANK 1 MODULE 25 X 50MM	BLANK 2 MODULE 50 X 50MM
CHALK WHITE – SCW	K5837SCW 1	K5806SCW 5	K5809SCW 5	K5805SCW 5	K188SCW 10	K180SCW 10
NATURAL STONE – SNS	K5837SNS 1	K5806SNS 5	K5809SNS 5	K5805SNS 5	K188SNS 10	K180SNS 10
BEACH PEBBLE – SBP	K5837SBP 1	K5806SBP 5	K5809SBP 5	K5805SBP 5	K188SBP 10	K180SBP 10
BLACK – BLK	K5837BLK 1	K5806BLK 5	K5809BLK 5	K5805BLK 5	K188BLK 10	K180BLK 10
	USB charging sockets, each capable of supporting 2A charge (total of 2A). **K5837 MOUNTING BOX** Minimum Box depth 35mm 46mm for extra wiring space IEC 60950-1 IEC 61000-6-1/3	**MOUNTING BOX** 35mm minimum	**MOUNTING BOX** 35mm minimum	**MOUNTING BOX** 35mm minimum	BS 5733: 2010 where applicable	BS 5733: 2010 where applicable

Blank Plates

	1 GANG		2 GANG	
SYNTHETIC FINISHES				
CHALK WHITE – SCW	K34330SCW	1	K34329SCW	1
NATURAL STONE – SNS	K34330SNS	1	K34329SNS	1
BEACH PEBBLE – SBP	K34330SBP	1	K34329SBP	1
GLASS EFFECT FINISHES				
ICE WHITE – GIW	K34330GIW	1	K34329GIW	1
POLISHED JADE – GPJ	K34330GPJ	1	K34329GPJ	1
POLISHED ONYX – GPO	K34330GPO	1	K34329GPO	1
POLISHED STONE – GPS	K34330GPS	1	K34329GPS	1
METALLIC FINISHES				
BRUSHED STEEL – MBS	K34330MBS	1	K34329MBS	1
BRUSHED BRONZE – MBB	K34330MBB	1	K34329MBB	1
CAST IRON – MCI	K34330MCI	1	K34329MCI	1
SATIN PLATINUM – MSP	K34330MSP	1	K34329MSP	1
SATIN TITANIUM – MST	K34330MST	1	K34329MST	1
NATURAL FINISHES				
BRITISH OAK – NBO	K34330NBO	1	K34329NBO	1
CREAM HIDE – NCH	K34330NCH	1	K34329NCH	1
DARK HIDE – NDH	K34330NDH	1	K34329NDH	1
DARK WENGE – NDW	K34330NDW	1	K34329NDW	1

MOUNTING BOXES
FLUSH
866ZIC
DIMENSIONS:
86 x 86mm
FIXING CENTRES
60.3mm
BS 5733:2010

MOUNTING BOXES
FLUSH
866ZIC
DIMENSIONS
86 x 146mm
FIXING CENTRES
120.6mm
BS 5733:2010

ASPECT

RANGE INTRODUCTION

The simple, clean styling of Aspect is both modern and contemporary, so it looks at home anywhere, in almost any kind of environment where style and quality are important.

The profile is just 4mm slim, so it's discreet, as well as stylish, while the concealed screws leave an elegant frontplate, making it more attractive still.

In addition to impressive looks, with Aspect comes unrivalled safety. Utilising MK's 3-pin operated safety shutter, that prevents misuse and unsafe access to live circuitry, Aspect offers the user the peace of mind and comfort that they have the safest range of wiring devices available installed in their surroundings.

Echo™ is an innovative range of entirely wireless, batteryless and self powered switches, only available from MK Electric and in finishes to complement the Aspect range. Please see page 21 for details.

HOW TO SPECIFY

A slimline metal, flush mounting range of wiring devices with screwless frontplates. Snap-on frontplates with a 4mm profile easily removable with a flat blade screwdriver through discreet bottom access apertures. Cable connections must be upward facing with easy to identify white markings on a dark background, grouped in a straight line with captive terminal screws for ease of installation. All sockets to have a 3 pin operated shutter safety mechanism and double pole switching, with the contacts designed such that the neutral makes before and breaks after the live pole for improved safety. Switches to be large and concave with a minimum 3mm contact gap with a positive 'click' to denote successful operation.

FEATURES & BENEFITS

SLIM PROFILE 'SCREWLESS' FRONT PLATES OF ONLY 4MM

Provide a clean and flawless look that complements the décor of the finest interiors.

TOTAL SAFETY

3-pin operated "child resistant shutter system", which is designed to inhibit access to the electricity supply, unless all 3 pins of a standard British 13A plug are in position.

COMPREHENSIVE RANGE OF SOCKETS, SWITCHES AND MODULAR ANCILLARY PRODUCTS

Mean that whatever the application, the Aspect range has a wiring device to suit.

13 STANDARD HIGH QUALITY FINISHES

Aspect now offers a range of fresh, reassuring and creative colours.

DESIGN SERVICE

Perfect for when only a creative solution will do.

Aspect

MATCHING METAL CAPPED ROCKERS AVAILABLE AS STANDARD
(excluding porcelain white finish and switches with neons)

DOUBLE POLE SWITCHING

13 HIGH QUALITY FINISHES TO CHOOSE FROM

CHOICE OF BLACK OR WHITE INSERTS ON MOST FINISHES
Provide impact resistance in any environment

STYLISH SLIM DESIGN
Frontplate profile only 4mm

PATENTED SPRING CLIP FOR POSITIVE EARTHING

3-PIN "CHILD RESISTANT SHUTTER SYSTEM"
Designed to inhibit access to the electricity supply, unless all 3 pins of a standard British 13A plug are in position

CORROSION RESISTANT SURFACE TREATED FRAME

SCREWDRIVER GUIDING RAMP

Terminal screws are backed out and captive Terminals are upwards facing to make installation easier.

Funnel entrance to terminals.

Clear terminal markings for easy identification.

As well as a wide choice of finishes, MK Aspect is available in a range of outlets for interactive and digital TV, IT and telecomms services. There are reliable and effective dimmer switches, and a comprehensive range of modular switches – all simple to install.

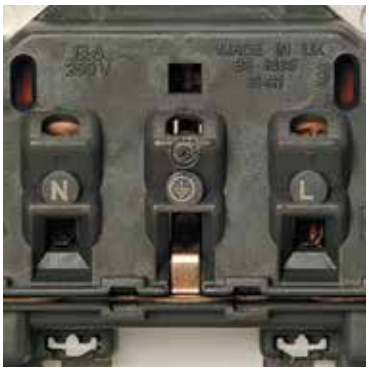

Aspect

Switchsocket Outlets

FINISHES	1 GANG DP DUAL EARTH 13 AMP		1 GANG DP WITH NEON DUAL EARTH 13 AMP		2 GANG DP DUAL EARTH 13 AMP		2 GANG DP WITH 2 X USB CHARGING PORTS DUAL EARTH 13 AMP		2 GANG DP WITH NEON DUAL EARTH 13 AMP	
BRUSHED STAINLESS STEEL	K24357BSS*	1	K24657BSS*	1	K24347BSS*	1	K24343BSS*	1	K24647BSS*	1
LACQUERED BRUSHED STEEL	K24357LBS*	1	K24657LBS*	1	K24347LBS*	1	K24343LBS*	1	K24647LBS*	1
BRUSHED CHROME	K24357BRC*	1	K24657BRC*	1	K24347BRC*	1	K24343BRC*	1	K24647BRC*	1
POLISHED CHROME	K24357POC*	1	K24657POC*	1	K24347POC*	1	K24343POC*	1	K24647POC*	1
SATIN GOLD	K24357SAG*	1	K24657SAG*	1	K24347SAG*	1	K24343SAG*	1	K24647SAG*	1
PORCELAIN WHITE	K24357WHIW	1	K24657WHIW	1	K24347WHIW	1	K24343WHIW	1	K24647WHIW	1
LUSTROUS IVORY	K24357LIVW	1	K24657LIVW	1	K24347LIVW	1	K24343LIVW	1	K24647LIVW	1
LUSTROUS BLACK	K24357LBKB	1	K24657LBKB	1	K24347LBKB	1	K24343LBKB	1	K24647LBKB	1
POLISHED BRASS	K24357PBR*	1	K24657PBR*	1	K24347PBR*	1	K24343PBR*	1	K24647PBR*	1
TEXTURED IRON	K24357TIRB	1	K24657TIRB	1	K24347TIRB	1	K24343TIRB	1	K24647TIRB	1
DESERT BRONZE	K24357DBZB	1	K24657DBZB	1	K24347DBZB	1	K24343DBZB	1	K24647DBZB	1
ANTIQUE BRASS	K24357ABSB	1	K24657ABSB	1	K24347ABSB	1	K24343ABSB	1	K24647ABSB	1
TEXTURED COPPER	K24357TCOB	1	K24657TCOB	1	K24347TCOB	1	K24343TCOB	1	K24647TCOB	1

LEAD TIMES
Please contact our Customer Services Department on
01268 563 404

* Available with the option of either White or Black inserts. Add Suffix 'W' or 'B' to part number when ordering, E.g. KxxxxBSSW. Where there is no asterix, the final suffix W = White Insert, B = Black Insert, E.g. KxxxxWHIW = Porcelain White finish with White inserts

MOUNTING BOXES
FLUSH 35MM
866ZIC
FLUSH 46MM
877ZIC (for extra wiring space)
DIMENSIONS
86 x 86mm
FIXING CENTRES
60.3mm
BS 1363-2:1995

MOUNTING BOXES
FLUSH 35MM
866ZIC
FLUSH 46MM
877ZIC (for extra wiring space)
DIMENSIONS
86 x 86mm
FIXING CENTRES
60.3mm
BS 1363-2:1995
Neon is only available in white or black insulated rocker.

MOUNTING BOXES
FLUSH 35MM
886ZIC
FLUSH 47MM
878ZIC (for extra wiring space)
DIMENSIONS
86 x 146mm
FIXING CENTRES
120.6mm
BS 1363-2:1995

USB charging sockets, each capable of supporting 2A charge (total of 2A)
Pattress available for use where existing back box is too shallow, see page 34

MOUNTING BOXES
FLUSH 35MM
886ZIC
FLUSH 47MM
878ZIC (for extra wiring space)
DIMENSIONS
86 x 146mm
FIXING CENTRES
120.6mm
BS 5733:2010

MOUNTING BOXES
FLUSH 35MM
886ZIC
FLUSH 47MM
878ZIC (for extra wiring space)
DIMENSIONS
86 x 146mm
FIXING CENTRES
120.6mm
BS 1363-2:1995
Neon is only available in white or black insulated rocker.

Dual Earth: Fitted with two earth terminals to provide a double earth facility for use when installations require a high integrity protective connection as specified within BS 7671: 2008.

Aspect

Multimedia Plates

1 GANG DP ROUND PIN 5 AMP		1 GANG DP ROUND PIN 15 AMP		2 GANG DP DUAL EARTH SWITCHSOCKET, EURO 2 MODULE 50 X 50MM (RIGHT SIDE) 13 AMP		2 GANG DP DUAL EARTH SWITCHSOCKET, EURO 2 MODULE 50 X 50MM (LEFT SIDE) 13 AMP	
K24382BSS*	1	K24383BSS*	1	K24206BSS*	1	K24207BSS*	1
K24382LBS*	1	K24383LBS*	1	K24206LBS*	1	K24207LBS*	1
K24382BRC*	1	K24383BRC*	1	K24206BRC*	1	K24207BRC*	1
K24382POC*	1	K24383POC*	1	K24206POC*	1	K24207POC*	1
K24382SAG*	1	K24383SAG*	1	K24206SAG*	1	K24207SAG*	1
K24382WHIW	1	K24383WHIW	1	K24206WHIW	1	K24207WHIW	1
K24382LIVW	1	K24383LIVW	1	K24206LIVW	1	K24207LIVW	1
K24382LBKB	1	K24383LBKB	1	K24206LBKB	1	K24207LBKB	1
K24382PBR*	1	K24383PBR*	1	K24206PBR*	1	K24207PBR*	1
K24382TIRB	1	K24383TIRB	1	K24206TIRB	1	K24207TIRB	1
K24382DBZB	1	K24383DBZB	1	K24206DBZB	1	K24207DBZB	1
K24382ABSB	1	K24383ABSB	1	K24206ABSB	1	K24207ABSB	1
K24382TCOB	1	K24383TCOB	1	K24206TCOB	1	K24207TCOB	1

* Available with the option of either White or Black inserts. Add Suffix 'W' or 'B' to part number when ordering, E.g. KxxxxBSSW.
Where there is no asterix, the final suffix W = White Insert, B = Black Insert, E.g. KxxxxWHIW = Porcelain White finish with White inserts

MOUNTING BOXES
FLUSH 35MM
866ZIC
FLUSH 46MM
877ZIC (for extra wiring space)
DIMENSIONS
86 x 86mm
FIXING CENTRES
60.3mm
BS 546:1950

MOUNTING BOXES
FLUSH 35MM
866ZIC
FLUSH 46MM
877ZIC (for extra wiring space)
DIMENSIONS
86 x 86mm
FIXING CENTRES
60.3mm
BS 546:1950

MOUNTING BOXES
FLUSH 47MM
870ZIC

BS 1363 Pt 2:1995

MOUNTING BOXES
FLUSH 47MM
870ZIC

BS 1363 Pt 2:1995

Dual Earth: Fitted with two earth terminals to provide a double earth facility for use when installations require a high integrity protective connection as specified within BS 7671: 2008.

Mains operated products and extra low voltage modules must not be installed within the same frontplate aperture. Refer to BS 7671: 2008 for details.

Aspect

FINISHES	2 GANG DP DUAL EARTH SWITCHSOCKET, EURO 4 MODULE 50 X 50MM (X2) 13 AMP		EURO 8 MODULE 100 X 50MM (X2)		EURO 12 MODULE 150 X 50MM (X2)	
BRUSHED STAINLESS STEEL	K24208BSS*	1	K24209BSS	1	K24210BSS	1
LACQUERED BRUSHED STEEL	K24208LBS*	1	K24209LBS	1	K24210LBS	1
BRUSHED CHROME	K24208BRC*	1	K24209BRC	1	K24210BRC	1
POLISHED CHROME	K24208POC*	1	K24209POC	1	K24210POC	1
SATIN GOLD	K24208SAG*	1	K24209SAG	1	K24210SAG	1
PORCELAIN WHITE	K24208WHIW	1	K24209WHI	1	K24210WHI	1
LUSTROUS IVORY	K24208LIVW	1	K24209LIV	1	K24210LIV	1
LUSTROUS BLACK	K24208LBKB	1	K24209LBK	1	K24210LBK	1
POLISHED BRASS	K24208PBR*	1	K24209PBR	1	K24210PBR	1
TEXTURED IRON	K24208TIRB	1	K24209TIR	1	K24210TIR	1
DESERT BRONZE	K24208DBZB	1	K24209DBZ	1	K24210DBZ	1
ANTIQUE BRASS	K24208ABSB	1	K24209ABS	1	K24210ABS	1
TEXTURED COPPER	K24208TCOB	1	K24209TCO	1	K24210TCO	1

LEAD TIMES
Please contact our Customer Services Department on
01268 563 404

* Available with the option of either White or Black inserts. Add Suffix 'W' or 'B' to part number when ordering, E.g. KxxxxBSSW. Where there is no asterix, the final suffix W = White Insert, B = Black Insert, E.g. KxxxxWHIW = Porcelain White finish with White inserts

MOUNTING BOXES
FLUSH 47MM
858ZIC
BS 5733:2010

MOUNTING BOXES
FLUSH 47MM
869ZIC
BS 5733:2010

MOUNTING BOXES
FLUSH 47MM
868ZIC

BS 1363 Pt 2:1995

Dual Earth: Fitted with two earth terminals to provide a double earth facility for use when installations require a high integrity protective connection as specified within BS 7671: 2008.

Mains operated products and extra low voltage modules must not be installed within the same frontplate aperture. Refer to BS 7671: 2008 for details.

Socket Outlets

1 GANG
DUAL EARTH
13 AMP

2 GANG
DUAL EARTH
13 AMP

1 GANG
ROUND PIN
5 AMP

Shaver/Toothbrush Supply Outlet

DUAL VOLTAGE
OUTPUT 115/230V
INPUT 220/240V
50/60HZ

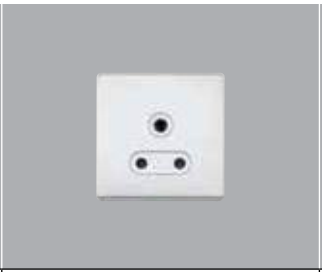

K24780BSS*	1	K24781BSS*	1	K24381BSS*	1	K24709BSS*	1
K24780LBS*	1	K24781LBS*	1	K24381LBS*	1	K24709LBS*	1
K24780BRC*	1	K24781BRC*	1	K24381BRC*	1	K24709BRC*	1
K24780POC*	1	K24781POC*	1	K24381POC*	1	K24709POC*	1
K24780SAG*	1	K24781SAG*	1	K24381SAG*	1	K24709SAG*	1
K24780WHIW	1	K24781WHIW	1	K24381WHIW	1	K24709WHIW	1
K24780LIVW	1	K24781LIVW	1	K24381LIVW	1	K24709LIVW	1
K24780LBKB	1	K24781LBKB	1	K24381LBKB	1	K24709LBKB	1
K24780PBR*	1	K24781PBR*	1	K24381PBR*	1	K24709PBR*	1
K24780TIRB	1	K24781TIRB	1	K24381TIRB	1	K24709TIRB	1
K24780DBZB	1	K24781DBZB	1	K24381DBZB	1	K24709DBZB	1
K24780ABSB	1	K24781ABSB	1	K24381ABSB	1	K24709ABSB	1
K24780TCOB	1	K24781TCOB	1	K24381TCOB	1	K24709TCOB	1

* Available with the option of either White or Black inserts. Add Suffix 'W' or 'B' to part number when ordering, E.g. KxxxxBSSW.
Where there is no asterix, the final suffix W = White Insert, B = Black Insert, E.g. KxxxxWHIW = Porcelain White finish with White inserts

MOUNTING BOXES
FLUSH 35MM
866ZIC
FLUSH 46MM
877ZIC (for extra wiring space)
DIMENSIONS
86 x 86mm
FIXING CENTRES
60.3mm
BS 1363-2:1995

MOUNTING BOXES
FLUSH 35MM
886ZIC
FLUSH 47MM
878ZIC (for extra wiring space)
DIMENSIONS
86 x 146mm
FIXING CENTRES
120.6mm
BS 1363-2:1995

MOUNTING BOXES
FLUSH 35MM
866ZIC
FLUSH 46MM
877ZIC (for extra wiring space)
DIMENSIONS
86 x 86mm
FIXING CENTRES
60.3mm
BS 546:1950

MOUNTING BOXES
FLUSH
878ZIC
This design incorporates a double wound isolating transformer rated 20VA at 230 or 115 volts and meets BS EN 61558-2-5: 1998 making it safe for use in bathrooms.
Insertion of a shaver/toothbrush plug automatically switches on by energising the primary side of the isolating transformer – removal automatically switches off. The transformer is protected against overload by an automatic solid state overload device with automatic resetting.
DIMENSIONS
146 x 86mm
FIXING CENTRES
120.6mm
BS EN 61558-2-5:1998

Dual Earth: Fitted with two earth terminals to provide a double earth facility for use when installations require a high integrity protective connection as specified within BS 7671: 2008.

Aspect

Connection Units Switched

Connection Units Unswitched

FINISHES	DP 13 AMP		DP WITH NEON 13 AMP		DP WITH NEON & FLEX OUTLET 13 AMP		WITH NEON 13 AMP	
BRUSHED STAINLESS STEEL	K24941BSS*	1	K24961BSS*	1	K24971BSS*	1	K24958BSS*	1
LACQUERED BRUSHED STEEL	K24941LBS*	1	K24961LBS*	1	K24971LBS*	1	K24958LBS*	1
BRUSHED CHROME	K24941BRC*	1	K24961BRC*	1	K24971BRC*	1	K24958BRC*	1
POLISHED CHROME	K24941POC*	1	K24961POC*	1	K24971POC*	1	K24958POC*	1
SATIN GOLD	K24941SAG*	1	K24961SAG*	1	K24971SAG*	1	K24958SAG*	1
PORCELAIN WHITE	K24941WHIW	1	K24961WHIW	1	K24971WHIW	1	K24958WHIW	1
LUSTROUS IVORY	K24941LIVW	1	K24961LIVW	1	K24971LIVW	1	K24958LIVW	1
LUSTROUS BLACK	K24941LBKB	1	K24961LBKB	1	K24971LBKB	1	K24958LBKB	1
POLISHED BRASS	K24941PBR*	1	K24961PBR*	1	K24971PBR*	1	K24958PBR*	1
TEXTURED IRON	K24941TIRB	1	K24961TIRB	1	K24971TIRB	1	K24958TIRB	1
DESERT BRONZE	K24941DBZB	1	K24961DBZB	1	K24971DBZB	1	K24958DBZB	1
ANTIQUE BRASS	K24941ABSB	1	K24961ABSB	1	K24971ABSB	1	K24958ABSB	1
TEXTURED COPPER	K24941TCOB	1	K24961TCOB	1	K24971TCOB	1	K24958TCOB	1

LEAD TIMES
Please contact our Customer Services Department on
01268 563 404

* Available with the option of either White or Black inserts. Add Suffix 'W' or 'B' to part number when ordering, E.g. KxxxxBSSW. Where there is no asterix, the final suffix W = White Insert, B = Black Insert, E.g. KxxxxLIVW = Lustrous Ivory Finish with White inserts

MOUNTING BOXES
FLUSH 47MM
877ZIC
DIMENSIONS
86 x 86mm
FIXING CENTRES
60.3mm
BS 1363-4:1995
Neon is only available in white or black insulated rocker.

MOUNTING BOXES
FLUSH 47MM
877ZIC
DIMENSIONS
86 x 86mm
FIXING CENTRES
60.3mm
BS 1363-4:1995
Neon is only available in white or black insulated rocker.

MOUNTING BOXES
FLUSH 47MM
877ZIC
DIMENSIONS
86 x 86mm
FIXING CENTRES
60.3mm
BS 1363-4:1995
Neon is only available in white or black insulated rocker.

MOUNTING BOXES
FLUSH 47MM
877ZIC
DIMENSIONS
86 x 86mm
FIXING CENTRES
60.3mm
BS 1363-4:1995
Neon is only available in white or black insulated rocker.

Matching metal capped fuse carriers are standard on all Aspect Connection Units (except Porcelain White).

Aspect

Switches

WITH NEON & FLEX OUTLET 13 AMP	1 GANG SP 2 WAY 20 AMP	2 GANG SP 2 WAY 20 AMP	3 GANG SP 2 WAY 10 AMP
K24978BSS* 1	K24371BSS* 1	K24372BSS* 1	K24373BSS* 1
K24978LBS* 1	K24371LBS* 1	K24372LBS* 1	K24373LBS* 1
K24978BRC* 1	K24371BRC* 1	K24372BRC* 1	K24373BRC* 1
K24978POC* 1	K24371POC* 1	K24372POC* 1	K24373POC* 1
K24978SAG* 1	K24371SAG* 1	K24372SAG* 1	K24373SAG* 1
K24978WHIW 1	K24371WHIW 1	K24372WHIW 1	K24373WHIW 1
K24978LIVW 1	K24371LIVW 1	K24372LIVW 1	K24373LIVW 1
K24978LBKB 1	K24371LBKB 1	K24372LBKB 1	K24373LBKB 1
K24978PBR* 1	K24371PBR* 1	K24372PBR* 1	K24373PBR* 1
K24978TIRB 1	K24371TIRB 1	K24372TIRB 1	K24373TIRB 1
K24978DBZB 1	K24371DBZB 1	K24372DBZB 1	K24373DBZB 1
K24978ABSB 1	K24371ABSB 1	K24372ABSB 1	K24373ABSB 1
K24978TCOB 1	K24371TCOB 1	K24372TCOB 1	K24373TCOB 1

* Available with the option of either White or Black inserts. Add Suffix 'W' or 'B' to part number when ordering, E.g. KxxxxBSSW.
Where there is no asterix, the final suffix W = White Insert, B = Black Insert, E.g. KxxxxLIVW = Lustrous Ivory Finish with White inserts

MOUNTING BOXES	MOUNTING BOXES	MOUNTING BOXES	MOUNTING BOXES
FLUSH 47MM	FLUSH 25MM	FLUSH 25MM	FLUSH 25MM
877ZIC	861ZIC	861ZIC	861ZIC
DIMENSIONS	DIMENSIONS	DIMENSIONS	DIMENSIONS
86 x 86mm	86 x 86mm	86 x 86mm	86 x 86mm
FIXING CENTRES	FIXING CENTRES	FIXING CENTRES	FIXING CENTRES
60.3mm	60.3mm	60.3mm	60.3mm
BS 1363-4:1995	BS EN 60669-1:1999	BS EN 60669-1:1999	BS EN 60669-1:1999

Matching metal capped fuse carriers are standard on all Aspect Connection Units (except Porcelain White).

Aspect

	Switches			High Current Switches
	1 GANG SP 2 WAY WITH LARGE ROCKER 20 AMP	2 GANG SP 2 WAY WITH LARGE ROCKERS 20 AMP	1 GANG SP 2 WAY WITH WIDE ROCKER 20 AMP	1 GANG DP WITH NEON 32 AMP
FINISHES				
BRUSHED STAINLESS STEEL	K23471BSS* 1	K23472BSS* 1	K23473BSS* 1	K24305BSS* 1
LACQUERED BRUSHED STEEL	K23471LBS* 1	K23472LBS* 1	K23473LBS* 1	K24305LBS* 1
BRUSHED CHROME	K23471BRC* 1	K23472BRC* 1	K23473BRC* 1	K24305BRC* 1
POLISHED CHROME	K23471POC* 1	K23472POC* 1	K23473POC* 1	K24305POC* 1
SATIN GOLD	K23471SAG* 1	K23472SAG* 1	K23473SAG* 1	K24305SAG* 1
PORCELAIN WHITE	K23471WHIW 1	K23472WHIW 1	K23473WHIW 1	K24305WHIW 1
LUSTROUS IVORY	K23471LIVW 1	K23472LIVW 1	K23473LIVW 1	K24305LIVW 1
LUSTROUS BLACK	K23471LBKB 1	K23472LBKB 1	K23473LBKB 1	K24305LBKB 1
POLISHED BRASS	K23471PBR* 1	K23472PBR* 1	K23473PBR* 1	K24305PBR* 1
TEXTURED IRON	K23471TIRB 1	K23472TIRB 1	K23473TIRB 1	K24305TIRB 1
DESERT BRONZE	K23471DBZB 1	K23472DBZB 1	K23473DBZB 1	K24305DBZB 1
ANTIQUE BRASS	K23471ABSB 1	K23472ABSB 1	K23473ABSB 1	K24305ABSB 1
TEXTURED COPPER	K23471TCOB 1	K23472TCOB 1	K23473TCOB 1	K24305TCOB 1

LEAD TIMES
Please contact our Customer Services Department on
01268 563 404

* Available with the option of either White or Black inserts. Add Suffix 'W' or 'B' to part number when ordering, E.g. KxxxxBSSW. Where there is no asterix, the final suffix W = White Insert, B = Black Insert, E.g. KxxxxLIVW = Lustrous Ivory Finish with White inserts

MOUNTING BOXES **FLUSH 25MM** 861ZIC **DIMENSIONS** 86 x 86mm **ROCKER DIMENSIONS** 22 x 40mm **FIXING CENTRES** 60.3mm BS EN 60669-1:1999	**MOUNTING BOXES** **FLUSH 25MM** 861ZIC **DIMENSIONS** 86 x 86mm **ROCKER DIMENSIONS** 22 x 40mm **FIXING CENTRES** 60.3mm BS EN 60669-1:1999	**MOUNTING BOXES** **FLUSH 25MM** 861ZIC **DIMENSIONS** 86 x 86mm **ROCKER DIMENSIONS** 50 x 40mm **FIXING CENTRES** 60.3mm BS EN 60669-1:1999	**MOUNTING BOXES** **FLUSH 35MM** 866ZIC **DIMENSIONS** 86 x 86mm **FIXING CENTRES** 60.3mm BS EN 60669-1:1999

1 GANG DP WITH NEON 50 AMP		Three Pole Fan Isolator 10 AMP		Intelligent Dimmers 2 WAY SINGLE 230V A.C. 50HZ 60W/VA MIN-500W/400VA MAX	
K24336BSS*	1	K24859BSS*	1	K24301BSS	1
K24336LBS*	1	K24859LBS*	1	K24301LBS	1
K24336BRC*	1	K24859BRC*	1	K24301BRC	1
K24336POC*	1	K24859POC*	1	K24301POC	1
K24336SAG*	1	K24859SAG*	1	K24301SAG	1
K24336WHIW	1	K24859WHIW	1	K24301WHI	1
K24336LIVW	1	K24859LIVW	1	K24301LIV	1
K24336LBKB	1	K24859LBKB	1	K24301LBK	1
K24336PBR*	1	K24859PBR*	1	K24301PBR	1
K24336TIRB	1	K24859TIRB	1	K24301TIR	1
K24336DBZB	1	K24859DBZB	1	K24301DBZ	1
K24336ABSB	1	K24859ABSB	1	K24301ABS	1
K24336TCOB	1	K24859TCOB	1	K24301TCO	1

* Available with the option of either White or Black inserts. Add Suffix 'W' or 'B' to part number when ordering, E.g. KxxxxBSSW. Where there is no asterix, the final suffix W = White Insert, B = Black Insert, E.g. KxxxxWHIW = Porcelain White finish with White inserts

MOUNTING BOXES
FLUSH 47MM
878ZIC
DIMENSIONS
86 x 146mm
FIXING CENTRES
120.6mm
BS EN 60669-1:1999

MOUNTING BOXES
FLUSH 25MM
861ZIC
DIMENSIONS
86 x 86mm
FIXING CENTRES
60.3mm
BS EN 60669-2-4

MOUNTING BOXES
FLUSH 35MM
866ZIC
DIMENSIONS
86 x 86mm
FIXING CENTRES
60.3mm

These dimmers employ the latest micro-controller based circuitry to provide electronic soft-start and overload protection. They are suitable for use with good quality electronic or wire-wound transformers. Can also be used with good quality halogen lamps incorporating GU10 bases. Please check with lamp manufacturer to determine suitability.

NOT SUITABLE FOR FLUORESCENT LOADS.
Conform to latest standards BS EN 60669-2-1.
All intelligent dimmers have a combined push-on/push-off switch and rotary dimmer control, and are suitable for one or two-way switching. Only one dimmer can be used in a two way switching circuit.

Aspect

Intelligent Dimmers

Grid Plus Modular Frontplates

SUPPLIED WITH MOUNTING FRAME

FINISHES	2 WAY SINGLE 230V A.C. 50HZ 40W/VA MIN. 300W/240VA MAX.		2 WAY DOUBLE 230V A.C. 50HZ 40W/VA MIN. 300W/240VA MAX. FOR EACH DIMMER		1 MODULE		2 MODULE	
BRUSHED STAINLESS STEEL	K24521BSS	1	K24522BSS	1	K24331BSS	1	K24332BSS	1
LACQUERED BRUSHED STEEL	K24521LBS	1	K24522LBS	1	K24331LBS	1	K24332LBS	1
BRUSHED CHROME	K24521BRC	1	K24522BRC	1	K24331BRC	1	K24332BRC	1
POLISHED CHROME	K24521POC	1	K24522POC	1	K24331POC	1	K24332POC	1
SATIN GOLD	K24521SAG	1	K24522SAG	1	K24331SAG	1	K24332SAG	1
PORCELAIN WHITE	K24521WHI	1	K24522WHI	1	K24331WHI	1	K24332WHI	1
LUSTROUS IVORY	K24521LIV	1	K24522LIV	1	K24331LIV	1	K24332LIV	1
LUSTROUS BLACK	K24521LBK	1	K24522LBK	1	K24331LBK	1	K24332LBK	1
POLISHED BRASS	K24521PBR	1	K24522PBR	1	K24331PBR	1	K24332PBR	1
TEXTURED IRON	K24521TIR	1	K24522TIR	1	K24331TIR	1	K24332TIR	1
DESERT BRONZE	K24521DBZ	1	K24522DBZ	1	K24331DBZ	1	K24332DBZ	1
ANTIQUE BRASS	K24521ABS	1	K24522ABS	1	K24331ABS	1	K24332ABS	1
TEXTURED COPPER	K24521TCO	1	K24522TCO	1	K24331TCO	1	K24332TCO	1

LEAD TIMES
Please contact our Customer Services Department on
01268 563 404

MOUNTING BOXES
FLUSH 35MM
866ZIC
DIMENSIONS
86 x 86mm
FIXING CENTRES
60.3mm

MOUNTING BOXES
FLUSH 35MM
866ZIC
DIMENSIONS
86 x 86mm
FIXING CENTRES
60.3mm

MOUNTING BOX
FLUSH
891ALM
DIMENSIONS
86 x 86mm
BS 5733:2010

MOUNTING BOX
FLUSH
891ALM
DIMENSIONS
86 x 86mm
BS 5733:2010

These dimmers employ the latest micro-controller based circuitry to provide electronic soft-start and overload protection. They are suitable for use with good quality electronic or wire-wound transformers. Can also be used with good quality halogen lamps incorporating GU10 bases. Please check with lamp manufacturer to determine suitability.

NOT SUITABLE FOR FLUORESCENT LOADS.
Conform to latest standards BS EN 60669-2-1.
All intelligent dimmers have a combined push-on/push-off switch and rotary dimmer control, and are suitable for one or two-way switching. Only one dimmer can be used in a two way switching circuit.

Aspect

3 MODULE		4 MODULE		6 MODULE		8 MODULE	
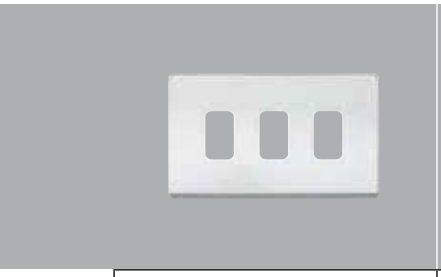		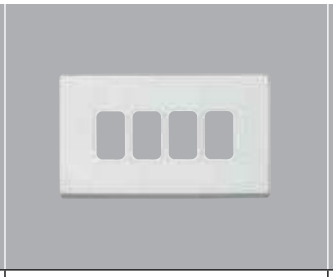		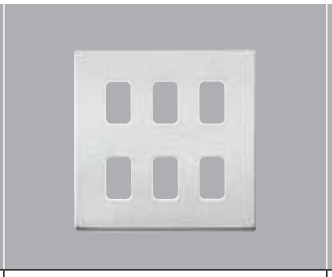		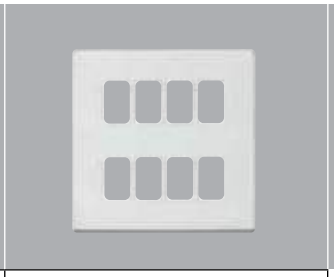	
K24333BSS	1	K24334BSS	1	K24346BSS	1	K24348BSS	1
K24333LBS	1	K24334LBS	1	K24346LBS	1	K24348LBS	1
K24333BRC	1	K24334BRC	1	K24346BRC	1	K24348BRC	1
K24333POC	1	K24334POC	1	K24346POC	1	K24348POC	1
K24333SAG	1	K24334SAG	1	K24346SAG	1	K24348SAG	1
K24333WHI	1	K24334WHI	1	K24346WHI	1	K24348WHI	1
K24333LIV	1	K24334LIV	1	K24346LIV	1	K24348LIV	1
K24333LBK	1	K24334LBK	1	K24346LBK	1	K24348LBK	1
K24333PBR	1	K24334PBR	1	K24346PBR	1	K24348PBR	1
K24333TIR	1	K24334TIR	1	K24346TIR	1	K24348TIR	1
K24333DBZ	1	K24334DBZ	1	K24346DBZ	1	K24348DBZ	1
K24333ABS	1	K24334ABS	1	K24346ABS	1	K24348ABS	1
K24333TCO	1	K24334TCO	1	K24346TCO	1	K24348TCO	1
MOUNTING BOX FLUSH 892ALM DIMENSIONS 86 x 146mm BS 5733:2010		MOUNTING BOX FLUSH 892ALM DIMENSIONS 86 x 146mm BS 5733:2010		MOUNTING BOX FLUSH: 893ALM DIMENSIONS 146 x 146mm BS 5733:2010		MOUNTING BOX FLUSH: 893ALM DIMENSIONS 146 x 146mm BS 5733:2010	

Aspect

	Grid Modules		Switch Modules 10 Amp		Switch Modules 10 Amp			
	BLANK INSERT		SP 1 WAY 10 AMP		DP 1 WAY 10 AMP		SP 2 WAY 10 AMP	
FINISHES								
BRUSHED STAINLESS STEEL	K4880BSS*	1	K4881BSS*	1	K4981BSS*	1	K4882BSS*	1
LACQUERED BRUSHED STEEL	K4880LBS*	1	K4881LBS*	1	K4981LBS*	1	K4882LBS*	1
BRUSHED CHROME	K4880BRC*	1	K4881BRC*	1	K4981BRC*	1	K4882BRC*	1
POLISHED CHROME	K4880POC*	1	K4881POC*	1	K4981POC*	1	K4882POC*	1
SATIN GOLD	K4880SAG*	1	K4881SAG*	1	K4981SAG*	1	K4882SAG*	1
PORCELAIN WHITE	K4880WHI	10	K4881WHI	10	K4981WHI	10	K4882WHI	10
LUSTROUS IVORY	K4880LIVW	1	K4881LIVW	1	K4981LIVW	1	K4882LIVW	1
LUSTROUS BLACK	K4880LBKB	1	K4881LBKB	1	K4981LBKB	1	K4882LBKB	1
POLISHED BRASS	K4880PBR*	1	K4881PBR*	1	K4981PBR*	1	K4882PBR*	1
TEXTURED IRON	K4880TIRB	1	K4881TIRB	1	K4981TIRB	1	K4882TIRB	1
DESERT BRONZE	K4880DBZB	1	K4881DBZB	1	K4981DBZB	1	K4882DBZB	1
ANTIQUE BRASS	K4880ABSB	1	K4881ABSB	1	K4981ABSB	1	K4882ABSB	1
TEXTURED COPPER	K4880TCOB	1	K4881TCOB	1	K4981TCOB	1	K4882TCOB	1

LEAD TIMES
Please contact our Customer Services Department on
01268 563 404

* Available with the option of either White or Black inserts. Add Suffix 'W' or 'B' to part number when ordering, E.g. KxxxxBSSW. Where there is no asterix, the final suffix W = White Insert, B = Black Insert, E.g. KxxxxLIVW Lustrous Ivory finish with white inserts

BS 5733:2010 | BS EN 60669-1:1999 | BS EN 60669-1:1999 | BS EN 60669-1:1999

SP 2 WAY RETRACTIVE 10 AMP		SP 2 WAY RED RETRACTIVE 10 AMP		SP 2 WAY RETRACTIVE MARKED BELL SYMBOL 10 AMP	
K4885BSS*	1				
K4885LBS*	1				
K4885BRC*	1				
K4885POC*	1				
K4885SAG*	1				
K4885WHI	10	K4885RED	1	K4885BWHI	1
K4885LIVW	1	K4885REDB	1	K4885BBLK	1
K4885LBKB	1				
K4885PBR*	1				
K4885TIRB	1				
K4885DBZB	1				
K4885ABSB	1				
K4885TCOB	1				

* Available with the option of either White or Black inserts. Add Suffix 'W' or 'B' to part number when ordering, E.g. KxxxxBSSW. Where there is no asterix, the final suffix W = White Insert, B = Black Insert, E.g. KxxxxLIVW Lustrous Ivory finish with white inserts

NOTE
Push switches are not designed for fluorescent loads.
BS EN 60669-1:1999

NOTE
Push switches are not designed for fluorescent loads.
BS EN 60669-1:1999

NOTE
Push switches are not designed for fluorescent loads.
BS EN 60669-1:1999

Aspect

Switch Modules 10 Amp

Switch Modules 20 Amp

FINISHES	SP 2 WAY RETRACTIVE MARKED 'PRESS' 10 AMP	2 WAY CENTRE OFF RETRACTIVE 10 AMP	SP 1 WAY 20 AMP	DP 1 WAY PUSH TO MAKE 20 AMP	DP 1 WAY RED ROCKER PUSH TO MAKE 20 AMP
BRUSHED STAINLESS STEEL	K4885PWHI 10 K4885PBLK 1	K4900BSS* 1	K4891BSS* 1	K4910BSS* 1	K4910RED 10 K4910REDB 1
LACQUERED BRUSHED STEEL		K4900LBS* 1	K4891LBS* 1	K4910LBS* 1	
BRUSHED CHROME		K4900BRC* 1	K4891BRC* 1	K4910BRC* 1	
POLISHED CHROME		K4900POC* 1	K4891POC* 1	K4910POC* 1	
SATIN GOLD		K4900SAG* 1	K4891SAG* 1	K4910SAG* 1	
MK WHITE (PLASTIC ROCKER)		K4900WHI 10	K4891WHI 10	K4910WHI 10	
LUSTROUS IVORY		K4900LIVW 1	K4891LIVW 1	K4910LIVW 1	
LUSTROUS BLACK		K4900LBKB 1	K4891LBKB 1	K4910LBKB 1	
POLISHED BRASS		K4900PBR* 1	K4891PBR* 1	K4910PBR* 1	
TEXTURED IRON		K4900TIRB 1	K4891TIRB 1	K4910TIRB 1	
DESERT BRONZE		K4900DBZB 1	K4891DBZB 1	K4910DBZB 1	
ANTIQUE BRASS		K4900ABSB 1	K4891ABSB 1	K4910ABSB 1	
TEXTURED COPPER		K4900TCOB 1	K4891TCOB 1	K4910TCOB 1	

LEAD TIMES
Please contact our Customer Services Department on
01268 563 404

NOTE
Push switches are not designed for fluorescent loads.
BS EN 60669-1:1999

NOTE
Push switches are not designed for fluorescent loads.
BS EN 60669-1:1999

BS EN 60669-1:1999

NOTE
Push switches are not designed for fluorescent loads.
BS EN 60669-1:1999

NOTE
Push switches are not designed for fluorescent loads.
BS EN 60669-1:1999

* Available with the option of either White or Black inserts. Add Suffix 'W' or 'B' to part number when ordering, E.g. KxxxxBSSW.
Where there is no asterix, the final suffix W = White Insert, B = Black Insert, E.g. KxxxxLIVW Lustrous Ivory finish with white inserts.

Switch Modules 20 Amp

DP 1 WAY PUSH TO BREAK RETRACTIVE 20 AMP	DP 1 WAY RED ROCKER PUSH TO BREAK RETRACTIVE 20 AMP	SP 2 WAY 20 AMP	SP 2 WAY RED ROCKER 20 AMP	SP 2 WAY WITH INTEGRAL NEON LOCATOR 20 AMP	SP 2 WAY & CENTRE OFF 20 AMP
K4915WHI 10	K4915RED 10	K4892BSS* 1	K4892RED 10	K4892LWHI 10	K4899BSS* 1
K4915BLK 10	K4915REDB 1	K4892LBS* 1	K4892REDB 10	K4892LBLK 1	K4899LBS* 1
		K4892BRC* 1			K4899BRC* 1
		K4892POC* 1			K4899POC* 1
		K4892SAG* 1			K4899SAG* 1
		K4892WHI 10			K4899WHI 10
		K4892LIVW 1			K4899LIVW 1
		K4892LBKB 1			K4899LBKB 1
		K4892PBR* 1			K4899PBR* 1
		K4892TIRB 1			K4899TIRB 1
		K4892DBZB 1			K4899DBZB 1
		K4892ABSB 1			K4899ABSB 1
		K4892TCOB 1			K4899TCOB 1
NOTE Push switches are not designed for fluorescent loads. BS EN 60669-1:1999	**NOTE** Push switches are not designed for fluorescent loads. BS EN 60669-1:1999	These switches do NOT have to be derated when used with fluorescent or inductive loads. BS EN 60669-1:1999	These switches do NOT have to be derated when used with fluorescent or inductive loads. Additional information on printed modules available in Grid Plus Section, pages 175. BS EN 60669-1:1999		These switches do NOT have to be derated when used with fluorescent or inductive loads. BS EN 60669-1:1999

* Available with the option of either White or Black inserts. Add Suffix 'W' or 'B' to part number when ordering, E.g. KxxxxBSSW.
Where there is no asterix, the final suffix W = White Insert, B = Black Insert, E.g. KxxxxLIVW Lustrous Ivory finish with white inserts.

Matching metal capped rockers available as standard (excluding porcelain white finish).

Matching metal capped rockers available as standard (excluding porcelain white finish).

Aspect

Switch Modules

FINISHES	SP 2 WAY & CENTRE OFF RED ROCKER 20 AMP	INTERMEDIATE 20 AMP	INTERMEDIATE RED ROCKER 20 AMP	DP 1 WAY 20 AMP	DP 1 WAY WITH NEON 20 AMP
BRUSHED STAINLESS STEEL		K4893BSS* 1		K4896BSS* 1	
LACQUERED BRUSHED STEEL		K4893LBS* 1		K4896LBS* 1	
BRUSHED CHROME		K4893BRC* 1		K4896BRC* 1	
POLISHED CHROME		K4893POC* 1		K4896POC* 1	
SATIN GOLD		K4893SAG* 1		K4896SAG* 1	
MK WHITE (PLASTIC ROCKER)	K4899RED 10	K4893WHI 1	K4893RED 10	K4896WHI 1	K4896NWHI 1
LUSTROUS IVORY	K4899REDB 10	K4893LIVW 1	K4893REDB 10	K4896LIVW 1	K4896NBLK 1
LUSTROUS BLACK		K4893LBKB 1		K4896LBKB 1	
POLISHED BRASS		K4893PBR* 1		K4896PBR* 1	
TEXTURED IRON		K4893TIRB 1		K4896TIRB 1	
DESERT BRONZE		K4893DBZB 1		K4896DBZB 1	
ANTIQUE BRASS		K4893ABSB 1		K4896ABSB 1	
TEXTURED COPPER		K4893TCOB 1		K4896TCOB 1	
	BS EN 60669-1:1999	BS EN 60669-1:1999	BS EN 60669-1:1999	BS EN 60669-1:1999	BS EN 60669-1:1999

LEAD TIMES
Please contact our Customer Services Department on
01268 563 404

* Available with the option of either White or Black inserts. Add Suffix 'W' or 'B' to part number when ordering, E.g. KxxxxBSSW. Where there is no asterix, the final suffix W = White Insert, B = Black Insert, E.g. KxxxxLIVW Lustrous Ivory finish with white inserts.

Matching metal capped rockers available as standard (excluding porcelain white finish).

Matching metal capped rockers available as standard (excluding porcelain white finish).

Switch Modules

DP
1 WAY
WITH WINDOW
20 AMP

DP
1 WAY
RED ROCKER
20 AMP

Printed Modules with and without Neon

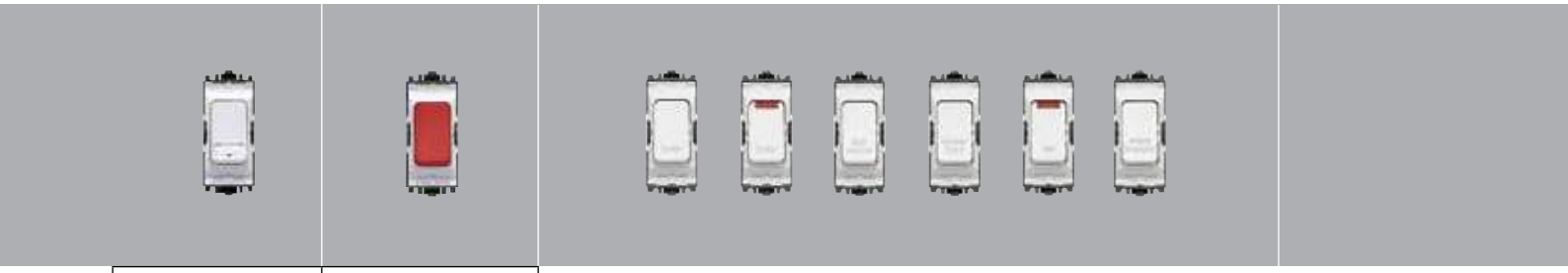

K4896WWHI 10 **K4896WBLK** 10	**K4896RED** 10 **K4896REDB** 10
BS EN 60669-1:1999	BS EN 60669-1:1999

K4896 PRINTED MODULE

FOR WHITE ROCKERS, USE THE SUFFIX 'WHI'. FOR BLACK ROCKERS, USE THE SUFFIX 'BLK'. FOR EXAMPLE: K4896BRWHI OR K4896BRBLK

BOILER K4896BR	WASTE DISPOSAL K4896WD	HOB K4896HB
DISHWASHER K4896DW	WASHING MACHINE K4896WM	IMMERSION HEATER K4896IH
COOKER HOOD K4896CH	TUMBLE DRYER K4896TD	PLINTH HEATER K4896PH
FAN K4896FN	WASHER DRYER K4896WDR	WORKTOP LIGHTING K4896WL
FRIDGE K4896Fg	MICROWAVE K4896MW	WINE COOLER K4896WC
FREEZER K4896FZ	HEATER K4896HR	WARMING DRAWER K4896WDA
FRIDGE FREEZER K4896FF	OVEN K4896OV	COFFEE MACHINE K4896CM

K4896N PRINTED MODULE WITH NEON

FOR WHITE ROCKERS, USE THE SUFFIX 'WHI'. FOR BLACK ROCKERS, USE THE SUFFIX 'BLK'. FOR EXAMPLE: K4896NBRWHI OR K4896NBRBLK

BOILER K4896NBR	WASTE DISPOSAL K4896NWD	HOB K4896NHB
DISHWASHER K4896NDW	WASHING MACHINE K4896NWM	IMMERSION HEATER K4896NIH
COOKER HOOD K4896NCH	TUMBLE DRYER K4896NTD	PLINTH HEATER K4896NPH
FAN K4896NFN	WASHER DRYER K4896NWDR	WORKTOP LIGHTING K4896NWL
FRIDGE K4896NFg	MICROWAVE K4896NMW	WINE COOLER K4896NWC
FREEZER K4896NFZ	HEATER K4896NHR	WARMING DRAWER K4896NWDA
FRIDGE FREEZER K4896NFF	OVEN K4896NOV	COFFEE MACHINE K4896NCM

NOTE
K4896NIH (Immersion Heater with Neon) is not available with black rockers.

Aspect

Key Switch Modules

	INTERMEDIATE 20 AMP	SP 2 WAY 20 AMP	SP 2 WAY EMERGENCY LIGHTING 20 AMP	DP 1 WAY 20 AMP	DP EMERGENCY LIGHTING 20 AMP	SP 2 WAY RETRACTIVE 20 AMP
FINISHES						
WHITE	**K4894WHI** 10	**K4898WHI** 10	**K4898ELWHI** 10	**K4917WHI** 10	**K4917ELWHI** 10	**K4918WHI** 10
BLACK	**K4894BLK** 1	**K4898BLK** 1	**K4898ELBLK** 1	**K4917BLK** 1		**K4918BLK** 10
LEAD TIMES Please contact our Customer Services Department on **01268 563 404**	BS EN 60669-1:1999 Key (3405ZIC) is supplied.	BS EN 60669-1:1999 Key (3405ZIC) is supplied.	BS EN 60669-1:1999 Key (3405ZIC) is supplied.	BS EN 60669-1:1999 Key (3405ZIC) is supplied.	BS EN 60669-1:1999 Key (3405ZIC) is supplied.	BS EN 60669-1:1999 Key (3405ZIC) is supplied.

Indicator Modules

200-250V NEON	200-250V NEON	200-250V FLUORESCENT	21-36V FILAMENT	21-36V FILAMENT	21-36V FILAMENT
K4889RED 10 **K4889REDB** 1	**K4889AMB** 10	**K4889GRN** 10	**K4836RED** 10	**K4836AMB** 10	**KK4836GRN** 10
BS 5733:2010	BS 5733:2010	BS 5733:2010	BS 5733:2010	BS 5733:2010	BS 5733:2010

Will Operate On Both A.C. And D.C

Not available in other finishes

Aspect

Dimmer Switch Modules

	1 GANG 40W/ VA-220W/180VA, 230VA.C, 50HZ 2 WAY 1 MODULE	1 GANG 60W/ VA-400W/320VA, 230VA.C, 50HZ 2 WAY 2 MODULE	1 GANG 40-220W/180VA/ 4-70W LED DIMMER 2 WAY 1 MODULE	0-10V/1-10V FLUORESCENT CONTROLLER 1 MODULE
FINISHES				
BRUSHED STAINLESS STEEL	K4501BSS*LV 1	K4500BSS*LV 1	K4511BSS*LV 1	K4499BSS* 1
LACQUERED BRUSHED STEEL	K4501LBS*LV 1	K4500LBS*LV 1	K4511LBS*LV 1	K4499LBS* 1
BRUSHED CHROME	K4501BRC*LV 1	K4500BRC*LV 1	K4511BRC*LV 1	K4499BRC* 1
POLISHED CHROME	K4501POC*LV 1	K4500POC*LV 1	K4511POC*LV 1	K4499POC* 1
SATIN GOLD	K4501SAG*LV 1	K4500SAG*LV 1	K4511SAG*LV 1	K4499SAG* 1
PORCELAIN WHITE	K4501WHIWLV 1	K4500WHIWLV 1	K4511WHIWLV 1	K4499WHI 1
LUSTROUS IVORY	K4501LIVWLV 1	K4500LIVWLV 1	K4511LIVWLV 1	K4499LIVW 1
LUSTROUS BLACK	K4501LBKBLV 1	K4500LBKBLV 1	K4511LBKBLV 1	K4499LBKB 1
POLISHED BRASS	K4501PBR*LV 1	K4500PBR*LV 1	K4511PBR*LV 1	K4499PBR* 1
TEXTURED IRON	K4501TIRBLV 1	K4500TIRBLV 1	K4511TIRBLV 1	K4499TIRB 1
DESERT BRONZE	K4501DBZBLV 1	K4500DBZBLV 1	K4511DBZBLV 1	K4499DBZB 1
ANTIQUE BRASS	K4501ABSBLV 1	K4500ABSBLV 1	K4511ABSBLV 1	K4499ABSB 1
TEXTURED COPPER	K4501TCOBLV 1	K4500TCOBLV 1	K4511TCOBLV 1	K4499TCOB 1

LEAD TIMES
Please contact our Customer Services Department on
01268 563 404

These dimmers incorporate the latest in micro-controller based circuitry to provide electronic soft-start and overload protection.
Suitable for use with good quality electronic or wire wound transformers. Can also be used with good quality mains voltage halogen lamps incorporating GU10 bases. Please check with lamp manufacturer to determine suitability.
K4500 is only suitable for use in 2, 4 and 8 module grids.
They are not suitable for fluorescent lamps.

NOTE
Refer to technical section for derating factors when more than one unit is used in any one box.
BS EN 60669-2-1.

MK Fluorescent Grid Dimmers are low voltage controllers for connection to 1-10V controllable ballasts.

* Available with the option of either White or Black inserts. Add Suffix 'W' or 'B' to part number when ordering, E.g. KxxxxBSSW. Where there is no asterix, the final suffix W = White Insert, B = Black Insert, E.g. KxxxxWHIW = Porcelain White finish with White inserts

When ordering K4500, K4501 & K4511, use the suffix 'LV' right at the end, eg. K4501BSSWLV

Accessory Modules

SINGLE TV CO-AXIAL OUTLET NON-ISOLATED	SINGLE TV CO-AXIAL OUTLET ISOLATED	BUZZER UNIT 200-250V	BUZZER UNIT 21-36V	CORD OUTLET 16 AMP
K4520WHI 10 **K4896WBLK** 10	**K4521WHI** 10 **K4521BLK** 10	**K4000WHI** 10	**K4001WHI** 10	**K4886WHI** 10 **K4886BLK** 10
For direct connection to TV or FM aerial co-axial downlead. NOT to be used in same enclosure as mains exceeding 50V. BS 3041:1977 IEC 169-2:1965 BS 5733:2010 where applicable.	For direct connection to TV or FM aerial co-axial downlead. NOT to be used in same enclosure as mains exceeding 50V. BS 3041:1977 IEC 169-2:1965 BS 5733:2010 where applicable.	200-250V BS 5733:2010	Sound output level Av 61 db @ 15 feet. BS 5733:2010	Complete with 3 pairs of terminals. The supply terminals are suitable for up to 2 x 2.5mm² or 1 x 4mm² solid conductors. The load terminals are suitable for one 1.5mm² flexible cord. A cord grip is also fitted. BS 5733:2010

Aspect

Accessory Modules

Euro Modular Frontplates

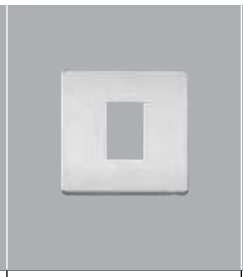
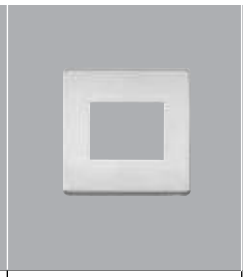
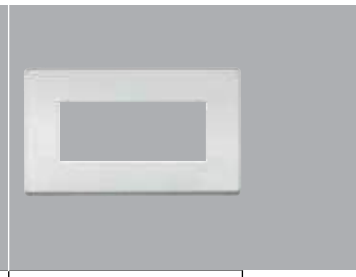

FINISHES	FUSE UNIT 13 AMP		FUSE UNIT WITH TAMPERPROOF SCREW 13 AMP		EURO 1 MODULE 25 X 50MM		EURO 2 MODULE 50 X 50MM		EURO 4 MODULE 100 X 50MM	
BRUSHED STAINLESS STEEL	K4890WHI	10	K4890KOWHI	10	K24181BSS	1	K24182BSS	1	K24184BSS	1
LACQUERED BRUSHED STEEL	K4890BLK	10	K4890KOBLK	10	K24181LBS	1	K24182LBS	1	K24184LBS	1
BRUSHED CHROME					K24181BRC	1	K24182BRC	1	K24184BRC	1
POLISHED CHROME					K24181POC	1	K24182POC	1	K24184POC	1
SATIN GOLD					K24181SAG	1	K24182SAG	1	K24184SAG	1
PORCELAIN WHITE					K24181WHI	1	K24182WHI	1	K24184WHI	1
LUSTROUS IVORY					K24181LIV	1	K24182LIV	1	K24184LIV	1
LUSTROUS BLACK					K24181LBK	1	K24182LBK	1	K24184LBK	1
POLISHED BRASS					K24181PBR	1	K24182PBR	1	K24184PBR	1
TEXTURED IRON					K24181TIR	1	K24182TIR	1	K24184TIR	1
DESERT BRONZE					K24181DBZ	1	K24182DBZ	1	K24184DBZ	1
ANTIQUE BRASS					K24181ABS	1	K24182ABS	1	K24184ABS	1
TEXTURED COPPER					K24181TCO	1	K24182TCO	1	K24184TCO	1

LEAD TIMES
Please contact our Customer Services Department on
01268 563 404

Fuse carrier comes with 13A cartridge fuse link to BS 1362.
BS 5733:2010

Key 3405ZIC supplied
Fuse carrier comes with 13A cartridge fuse link to BS 1362.
BS 5733:2010

MOUNTING BOXES
Suitable for flush boxes to BS 4662:2006 and surface boxes to BS 5733:2010
Refer to appropriate module for minimum box depth.
FIXING CENTRES
60.3mm
BS 5733:2010 where applicable.
Note: No grid required, modules just clip into place.

MOUNTING BOXES
Suitable for flush boxes to BS 4662:2006 and surface boxes to BS 5733:2010
Refer to appropriate module for minimum box depth.
FIXING CENTRES
60.3mm
BS 5733:2010 where applicable.
Note: No grid required, modules just clip into place.

MOUNTING BOXES
Suitable for flush boxes to BS 4662:2006 and surface boxes to BS 5733:2010
Refer to appropriate module for minimum box depth.
FIXING CENTRES
120.6mm
BS 5733:2010 where applicable.
Note: No grid required, modules just clip into place.

Euro Power Modules

UK 250V 2 MODULE 50 X 50MM 13 AMP	GERMAN 2P+E 250V SHUTTERED 2 MODULE (NON UK) 16 AMP	AMERICAN 127V SHUTTERED 2 MODULE 50 X 50MM (NON UK) 15 AMP	UK 250V SHUTTERED 2 MODULE 50 X 50MM 5 AMP	FRENCH/BELGIAN 2P+E 250V SHUTTERED 2 MODULE 50 X 50MM (NON UK) 16 AMP
K5830WHI 10 **K5830BLK** 10	**K5831WHI** 10 **K5831BLK** 10	**K5832WHI** 10 **K5832BLK** 10	**K5833WHI** 10 **K5833BLK** 10	**K5834WHI** 10 **K5834BLK** 10
MOUNTING BOX 35mm minimum 46mm (for extra wiring space). **DIMENSIONS** 50 x 50mm BS 1363 Part 2:1995	**MOUNTING BOX** 46mm **DIMENSIONS** 50 x 50mm IEC 60884-1:2006	**MOUNTING BOX** 35mm 46mm (for extra wiring space) **DIMENSIONS** 50 x 50mm SASO 2204:2003	**MOUNTING BOX** 35mm minimum 46mm (for extra wiring space). **DIMENSIONS** 50 x 50mm BS 546:1950	**MOUNTING BOX** 46mm **DIMENSIONS** 50 x 50mm NF C61-314

**Mains operated products and extra low voltage modules must not be installed within the same frontplate.
Refer to BS 7671:2008 for details.**

Aspect

	Euro Power Modules	Euro Datacom Modules			
	USB CHARGING 2 MODULE 50 X 50MM	RJ11/12 1 MODULE 25 X 50MM	RJ45 CAT 6 1 MODULE 25 X 50MM	RJ45 CAT 6 SCREENED 1 MODULE 25 X 50MM	RJ45 CAT 6 ANGLED 1 MODULE 25 X 50MM
FINISHES					
WHITE	**K5837WHI** 1	**K5887WHI** 5	**K5846WHI** 5	**K5846SWHI** 5	**K5864WHI** 5
BLACK	**K5837BLK** 1	**K5887BLK** 5	**K5846BLK** 5	**K5846SBLK** 5	

LEAD TIMES
Please contact our Customer Services Department on
01268 563 404

USB charging sockets, each capable of supporting 2A charge (total of 2A)
K5837 MOUNTING BOX
35mm minimum
46mm for extra wiring space
IEC 60950-1
IEC 61000-6-1/3

Suitable for both RJ11 and RJ12 jacks
RJ11; 4 wire
RJ12; 6 wire
MOUNTING BOXES
Minimum box depth 35mm
FCC68
EN 41003

Cat 6 performance.
Suitable for both 568A and 568B wiring schemes.

MOUNTING BOXES
Minimum Box Depth 35mm
ISO/IEC 11801
EN 50173
TIA 568
EN 41003

Cat 6 performance.
Suitable for both 568A and 568B wiring schemes.

MOUNTING BOXES
Minimum Box Depth 35mm
ISO/IEC 11801
EN 50173
TIA 568
EN 41003

Cat 6 performance.
Suitable for both 568A and 568B wiring schemes.

MOUNTING BOXES
Minimum Box Depth 35mm
ISO/IEC 11801
EN 50173
TIA 568
EN 41003

**Mains operated products and extra low voltage modules must not be installed within the same frontplate.
Refer to BS 7671:2008 for details.**

RJ45 CAT 5e ANGLED 1 MODULE 25 X 50MM	RJ45 CAT 5e 1 MODULE 25 X 50MM	TELEPHONE MASTER 1 MODULE 25 X 50MM	TELEPHONE SECONDARY 1 MODULE 25 X 50MM	BNC 50Ω 1 MODULE 25 X 50MM
K5844WHI 5	**K5845WHI** 5	**K5820WHI** 5	**K5821WHI** 5	**K5801WHI** 5
	K5845BLK 5	**K5820BLK** 5	**K5821BLK** 5	
Enhanced Cat 5 performance. Suitable for both 568A and 568B wiring schemes. **MOUNTING BOXES** Minimum box depth 35mm standard ISO/IEC 11801 EN 50173 TIA 568 EN 41003	Enhanced Cat 5 performance. Suitable for both 568A and 568B wiring schemes. **MOUNTING BOXES** Minimum box depth 35mm standard ISO/IEC 11801 EN 50173 TIA 568 EN 41003	**MOUNTING BOXES** Minimum depth 35mm BS 6312-2	**MOUNTING BOXES** Minimum depth 35mm BS 6312-2	50 Ohm crimp connector suitable for use with RG58, URM43, URM76 and Beldon 9907 type co-axial cables. **MOUNTING BOXES** Minimum box depth 35mm

**Mains operated products and extra low voltage modules must not be installed within the same frontplate.
Refer to BS 7671:2008 for details.**

Aspect

Euro Multimedia Modules

	SINGLE OUTLET (IEC MALE) 1 MODULE 25 X 50MM	SINGLE OUTLET (IEC FEMALE) 1 MODULE 25 X 50MM	SINGLE F-TYPE SATELLITE SOCKET 1 MODULE 25 X 50MM	TWIN OUTLET TV/FM DIPLEXER 2 MODULE 50 X 50MM (IRELAND ONLY)
FINISHES				
WHITE	**K5850WHI** 5	**K5851WHI** 5	**K5855WHI** 5	**K5852WHI** 5
BLACK	**K5850BLK** 5	**K5851BLK** 5	**K5855BLK** 5	**K5852BLK** 5

LEAD TIMES
Please contact our Customer Services Department on
01268 563 404

Fully screened non isolated TV outlets containing a combination of single, TV/FM Diplexer, TV/FM/SAT Triplexer and BT secondary telephone outlets for use within digital TV systems and interactive TV services.
Single outlets for connection to a single TV, FM or Satellite co-axial aerial lead.

MOUNTING BOXES
Min box depth 47mm

DIMENSIONS
ONE MODULE 25 x 50mm
TWO MODULE 50 x 50mm
BS 3041:1997, IEC 169-2:1965, BS EN 50083 & BS 5733:2010 where applicable.

TV/FM Diplexer units for connection to a single co-axial aerial lead with combined TV and FM signals.

PERFORMANCE

Single	TV:	DC - 950MHz
	Sat:	DC - 1.75GHz
Diplexer	TV:	5-65MHz 470-862MHz
	FM:	87.5-108 MHz

TV/FM/DAB FOR DIGITAL RADIO PERFORMANCE

Diplexer	TV:	5-65MHz 470-862MHz
	FM/DAB:	87.5-230MHz

These products are fully compatible with Labgear TV distribution systems and are approved for use in "Sky Homes" and "Homes On" specifications.

**Mains operated products and extra low voltage modules must not be installed within the same frontplate.
Refer to BS 7671:2008 for details.**

Euro Multimedia Modules

TWIN OUTLET TV-FM/DAB DIPLEXER 2 MODULE 50 X 50MM	TRIPLE OUTLET TV/FM/SATELLITE TRIPLEXER 2 MODULE 50 X 50MM (IRELAND ONLY)	TRIPLE OUTLET TV-FM/DAB-SAT TRIPLEXER 2 MODULE 50 X 50MM	QUAD OUTLET TV-FM/DAB-2XSAT 2 MODULE 50 X 50MM	FEMALE HDMI OUTLET 2 MODULE 50 X 50MM
K5852DABWHI 5	K5853WHI 5	K5853DABWHI 5	K5854DABWHI 5	K5807WHI 5
K5852DABBLK 5	K5853BLK 5	K5853DABBLK 5	K5854DABBLK 5	K5807BLK 5

TV/FM Diplexer units for connection to a single co-axial aerial lead with combined TV and FM signals.

PERFORMANCE

Single	TV:	DC - 950MHz
	Sat:	DC - 1.75GHz
Diplexer	TV:	5-65MHz 470-862MHz
	FM:	87.5-108 MHz

TV/FM/DAB FOR DIGITAL RADIO PERFORMANCE

Diplexer	TV:	5-65MHz 470-862MHz
	FM/DAB:	87.5-230MHz

TV/FM diplexer units for connection to a single co-axial aerial lead with combined TV and FM signals.
TV/FM/SAT triplexer units for connection to a single co-axial aerial lead with combined TV, FM and Satellite signals

PERFORMANCE

SINGLE OUTLETS

TV/FM IEC MALE OR FEMALE
DC-950MHz

SAT F-TYPE
DC-1.75GHz

TV/FM/SAT PRODUCTS

OUTLET	DIPLEXER	OUTLET	TRIPLEXER
TV	5-65MHz 470-862MHz	TV	5-65MHZ 470-862MHz
FM/DAB	87.5-108MHz	FM	87.5-108MHz
SAT	N/A	SAT1	950-2300MHz

TV/FM/DAB/SAT PRODUCTS FOR DIGITAL RADIO

OUTLET	DIPLEXER	OUTLET	TRIPLEXER
TV	5-65MHz 470-862MHz	TV	5-65MHz 470-862MHz
FM/DAB	87.5-230MHz	FM	87.5-230MHz
SAT OR SAT1	N/A	SAT1	950-2300MHz
SAT2		SAT2	5-2300MHz

K5807 Female HDMI Outlet is HDMI 1.1, 1.2. 1.3 and 1.4b compatible, HDCP compliant.

DATA RATE
Up to 2.25 Gbps

SCAN
Up to 1080p/1920x1200

INPUT CONNECTOR
1 x HDMI Female (Type A)

OUTPUT CONNECTOR
1 x HDMI Female (Type A)

Supports high resolution input:
PC: VGA, SVGA,
SXVGA (1280x1024) and UXGA (1600x1200, 1920x1200)
HDTV: 480p, 720p, 1080i and 1080p
HDMI input cable should be no larger than 20m.

DIMENSIONS
50 x 50 x 20mm

These products are fully compatible with Labgear TV distribution systems and are approved for use in "Sky Homes" and "Homes On" specifications.

**Mains operated products and extra low voltage modules must not be installed within the same frontplate.
Refer to BS 7671:2008 for details.**

Aspect

Euro Blank Modules

FINISHES	2 MODULE 50 X 50MM	1 MODULE 25 X 50MM	1/2 MODULE 12.5 X 50MM	AUDIO BINDING POST FOR SINGLE LOUD SPEAKER 1 MODULE 25 X 50MM	RCA TO SCREW TERMINATION SET 1 RED AND 1 BLACK 1 MODULE 25 X 50MM
BRUSHED STAINLESS STEEL					
LACQUERED BRUSHED STEEL					
BRUSHED CHROME					
POLISHED CHROME					
SATIN GOLD					
PORCELAIN WHITE	K180WHI 10	K188WHI 10	K186WHI 10	K5805WHI 5	K5806WHI 5
LUSTROUS IVORY	K180BLK 10	K188BLK 10	K186BLK 10	K5805BLK 5	K5806BLK 5
LUSTROUS BLACK					
POLISHED BRASS					
TEXTURED IRON					
DESERT BRONZE					
ANTIQUE BRASS					
TEXTURED COPPER					
LEAD TIMES Please contact our Customer Services Department on **01268 563 404**	BS 5733:2010 where applicable	BS 5733:2010 where applicable	BS 5733:2010 where applicable	**DIMENSIONS** 50 x 25 x 28mm	**DIMENSIONS** 50 x 25 x 28mm

LJU6C Datacom Frontplate

1 GANG
2 MODULE
22 X 37MM

LJU6C datacom modules

RJ11/12
1 MODULE

RJ45 CAT 6
1 MODULE

RJ45
CAT 6
SCREENED
1 MODULE

RJ45
CAT 5e
1 MODULE

K14172BSS*	1						
K14172LBS*	1						
K14172BRC*	1						
K14172POC*	1						
K14172SAG*	1						
K14172WHIW	1						
K14172LIVW	1	K5787WHI	5	K5746WHI	5	K5746SWHI	5	K5745WHI	5
K14172LBK	1			K5746BLK	5	K5746SBLK	5	K5745BLK	5
K14172PBRB	1						
K14172TIRB	1						
K14172DBZB	1						
K14172ABSB	1						
K14172TCOB	1						

MOUNTING BOXES
Suitable for flush boxes to BS 4662:1970 and surface boxes to BS 5733:2010
Refer to appropriate module for minimum box depth.
FIXING CENTRES
1 gang: 60.3mm
2 gang: 120.6mm
BS 5733:2010 where applicable
NOTE
No grid required, modules just clip into place

Suitable for both RJ11 and RJ12 jacks.
RJ11: 4 wire
RJ12: 6 wire
MOUNTING BOXES
Minimum box depth 35mm
FCC68
EN41003

Cat 6 performance.
Suitable for both 568A and 568B wiring schemes.
MOUNTING BOXES
Minimum Box Depth 35mm
ISO/IEC 11801
EN 50173
TIA 568
EN 41003

Cat 6 performance.
Suitable for both 568A and 568B wiring schemes.
MOUNTING BOXES
Minimum Box Depth 35mm
ISO/IEC 11801
EN 50173
TIA 568
EN 41003

Enhanced Cat 5 performance.
Suitable for both 568A and 568B wiring schemes.
MOUNTING BOXES
Minimum box depth 25mm
ISO/IEC 11801
EN 50173
TIA 568
EN 41003

* Available with White or Black inserts.

Aspect

LJU6C datacom Blanks

LJU6C
1 MODULE
22 X 37MM

Blank Plates

1 GANG

2 GANG

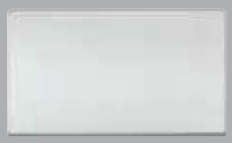

FINISHES			1 GANG		2 GANG	
BRUSHED STAINLESS STEEL	K170WHI K170BLK	10 10	K24330BSS	1	K24329BSS	1
LACQUERED BRUSHED STEEL			K24330LBS	1	K24329LBS	1
BRUSHED CHROME			K24330BRC	1	K24329BRC	1
POLISHED CHROME			K24330POC	1	K24329POC	1
SATIN GOLD			K24330SAG	1	K24329SAG	1
PORCELAIN WHITE			K24330WHI	1	K24329WHI	1
LUSTROUS IVORY			K24330LIV	1	K24329LIV	1
LUSTROUS BLACK			K24330LBK	1	K24329LBK	1
POLISHED BRASS			K24330PBR	1	K24329PBR	1
TEXTURED IRON			K24330TIR	1	K24329TIR	1
DESERT BRONZE			K24330DBZ	1	K24329DBZ	1
ANTIQUE BRASS			K24330ABS	1	K24329ABS	1
TEXTURED COPPER			K24330TCO	1	K24329TCO	1

LEAD TIMES
Please contact our Customer Services Department on
01268 563 404

MOUNTING BOXES
BS 5733:2010

MOUNTING BOXES
FLUSH
866ZIC
DIMENSIONS:
86 x 86mm
FIXING CENTRES
60.3mm
BS 5733:2010

MOUNTING BOXES
FLUSH
866ZIC
DIMENSIONS
86 x 146mm
FIXING CENTRES
120.6mm
BS 5733:2010

CASE STUDY

ST GEORGE BATTERSEA REACH DEVELOPMENT, LONDON

The new MK Elements range was specified extensively at the St George Battersea Reach development in London. This ongoing residential development from the Berkeley Group, is situated in the bustling vicinity of England's capital and offers a wide range of high end apartments.

The Client, St George favoured the glass effect finish and touch controlled dimmers for their elegant styling, which perfectly complements the superior character of such a prestigious development.

Edge™

RANGE INTRODUCTION

Edge™ is a range of wiring devices that combine function and style. The design is smooth, clean and the products are very slim – in fact just 1.5mm. Edge™ is the choice in modern, contemporary or traditional interiors where style and detail are the desired effect.

With Edge™ comes unrivalled safety. Utilising MK's 3-pin operated safety shutter, that prevents misuse and unsafe access to live circuitry, Edge™ offers the user the peace of mind and comfort that they have the safest range of wiring devices available installed in their surroundings.

HOW TO SPECIFY

A metal flatplate flush mounting range of wiring accessories, to be made in the UK. Frontplate to have a maximum 1.5mm profile and subtle 5mm radius rounded corners. Fixing screws to be flathead design, flush fitting & coloured to match the frontplate. Cable connections must be upward facing with easy to identify white markings on a dark background, grouped in a straight line with captive terminal screws for ease of installation. All sockets to have a 3 pin operated shutter safety mechanism and double pole switching, with the contacts designed such that the neutral makes before and breaks after the live pole for improved safety. Switches to be large and concave with a minimum 3mm contact gap with a positive 'click' to denote successful operation.

FEATURES & BENEFITS

SLIM PROFILE FRONTPLATES OF ONLY 1.5MM WITH MATCHING FLAT HEAD SCREWS THROUGHOUT

A clean and practical range of products that complement the finest interiors.

TOTAL SAFETY

3-pin operated "child resistant shutter system", which is designed to inhibit access to the electricity supply, unless all 3 pins of a standard British 13A plug are in position.

COMPREHENSIVE RANGE OF SOCKETS, SWITCHES AND MODULAR ANCILLARY PRODUCTS

Mean that whatever the application, the Edge™ range has a wiring device to suit.

13 STANDARD HIGH QUALITY FINISHES WITH A MADE-TO-ORDER SERVICE

Allows designers the flexibility to provide the finish of their choice.

In addition to the wide choice of standard fifnishes, a made-to-order service gives designers the ability to match almost any RAL colour required.

Edge™

DOUBLE POLE SWITCHING

MATCHING METAL CAPPED ROCKER SWITCHES AS STANDARD (EXCLUDING PORCELAIN WHITE FINISH AND SWITCHES WITH NEONS)

FLATHEAD SCREWS THROUGHOUT

STYLISH SLIM-LINE DESIGN
Frontplate profile only 1.5mm

3-PIN "CHILD RESISTANT SHUTTER SYSTEM"
Designed to inhibit access to the electricity supply, unless all 3 pins of a standard British 13A plug are in position

13 HIGH QUALITY FINISHES TO CHOOSE FROM
Provide impact resistance in any environment

OPTIONAL BLACK OR WHITE INSERTS ON SELECTED FINISHES

Terminal screws are backed out and captive. Terminals are upwards facing to make installation easier.

Funnel entrance to terminals.

Clear terminal markings for easy identification.

The built-in lock in the Edge™ 13A Key Operated Socket ensures that power cannot be turned on or off without the removeable key, making it ideal for communal areas such as hotel lobbies.

Combination plates provide a neat solution to all power, data, TV and satellite outlet requirements.

Edge™

Switchsocket Outlets

FINISHES	1 GANG DP DUAL EARTH 13 AMP		1 GANG DP WITH NEON DUAL EARTH 13 AMP		NON STANDARD 1 GANG DP CLEAN EARTH 13 AMP		2 GANG DP WITH 2 X USB CHARGING PORTS DUAL EARTH 13 AMP		2 GANG DP DUAL EARTH 13 AMP	
BRUSHED STAINLESS STEEL	K14357BSS*	1	K14657BSS*	1	K14268BSS*	1	K14343BSS*	1	K14347BSS*	1
LACQUERED BRUSHED STEEL	K14357LBS*	1	K14657LBS*	1	K14268LBS*	1	K14343LBS*	1	K14347LBS*	1
BRUSHED CHROME	K14357BRC*	1	K14657BRC*	1	K14268BRC*	1	K14343BRC*	1	K14347BRC*	1
POLISHED CHROME	K14357POC*	1	K14657POC*	1	K14268POC*	1	K14343POC*	1	K14347POC*	1
SATIN GOLD	K14357SAG*	1	K14657SAG*	1	K14268SAG*	1	K14343SAG*	1	K14347SAG*	1
PORCELAIN WHITE	K14357WHIW	1	K14657WHIW	1	K14268WHIW	1	K14343WHIW	1	K14347WHIW	1
LUSTROUS IVORY	K14357LIVW	1	K14657LIVW	1	K14268LIVW	1	K14343LIVW	1	K14347LIVW	1
LUSTROUS BLACK	K14357LBKB	1	K14657LBKB	1	K14268LBKB	1	K14343LBKB	1	K14347LBKB	1
POLISHED BRASS	K14357PBR*	1	K14657PBR*	1	K14268PBR*	1	K14343PBR*	1	K14347PBR*	1
TEXTURED IRON	K14357TIRB	1	K14657TIRB	1	K14268TIRB	1	K14343TIRB	1	K14347TIRB	1
DESERT BRONZE	K14357DBZB	1	K14657DBZB	1	K14268DBZB	1	K14343DBZB	1	K14347DBZB	1
ANTIQUE BRASS	K14357ABSB	1	K14657ABSB	1	K14268ABSB	1	K14343ABSB	1	K14347ABSB	1
TEXTURED COPPER	K14357TCOB	1	K14657TCOB	1	K14268TCOB	1	K14343TCOB	1	K14347TCOB	1

LEAD TIMES
Please contact our Customer Services Department on
01268 563 404

* Available with the option of either White or Black inserts. Add Suffix 'W' or 'B' to part number when ordering, E.g. KxxxxBSSW. Where there is no asterix, the final suffix W = White Insert, B = Black Insert, E.g. KxxxxWHIW = Porcelain White finish with White inserts

MOUNTING BOXES
FLUSH 35mm
866ZIC
FLUSH 46mm
877ZIC (for extra wiring space)
DIMENSIONS
86 x 86mm
FIXING CENTRES
60.3mm
BS 1363-2:1995

MOUNTING BOXES
FLUSH 35mm
866ZIC
FLUSH 46mm
877ZIC (for extra wiring space)
DIMENSIONS
86 x 86mm
FIXING CENTRES
60.3mm
BS 1363-2:1995
Neon is only available in white or black insulated rocker.

MOUNTING BOXES
FLUSH 35mm
866ZIC
FLUSH 46mm
877ZIC (for extra wiring space)
DIMENSIONS
86 x 86mm
FIXING CENTRES
60.3mm
BS 1363-2:1995 (where relevant)
These products are provided with facilities for 'clean earth' connections and are suitable for non-standard plugs with 'T' shaped earth pins.

USB charging sockets, each capable of supporting 2A charge (total of 2A)
Pattress available for use where existing back box is too shallow, see page 34

MOUNTING BOXES
FLUSH 35mm
886ZIC
FLUSH 47mm
878ZIC (for extra wiring space)
DIMENSIONS
86 x 146mm
FIXING CENTRES
120.6mm
BS 5733:2010

MOUNTING BOXES
FLUSH 35mm
886ZIC
FLUSH 47mm
878ZIC (for extra wiring space)
DIMENSIONS
86 x 146mm
FIXING CENTRES
120.6mm
BS 1363-2:1995

Dual Earth: Fitted with two earth terminals to provide a double earth facility for use when installations require a high integrity protective connection as specified within BS 7671:2008.

2 GANG DP CLEAN EARTH 13 AMP	2 GANG DP WITH NEON DUAL EARTH 13 AMP	NON STANDARD 2 GANG DP CLEAN EARTH 13 AMP	1 GANG DP ROUND PIN 15 AMP	1 GANG DP 5 AMP
K14345BSS* 1	K14647BSS* 1	K14246BSS* 1	K14383BSS* 1	K14382BSS* 1
K14345LBS* 1	K14647LBS* 1	K14246LBS* 1	K14383LBS* 1	K14382LBS* 1
K14345BRC* 1	K14647BRC* 1	K14246BRC* 1	K14383BRC* 1	K14382BRC* 1
K14345POC* 1	K14647POC* 1	K14246POC* 1	K14383POC* 1	K14382POC* 1
K14345SAG* 1	K14647SAG* 1	K14246SAG* 1	K14383SAG* 1	K14382SAG* 1
K14345WHIW 1	K14647WHIW 1	K14246WHIW 1	K14383WHIW 1	K14382WHIW 1
K14345LIVW 1	K14647LIVW 1	K14246LIVW 1	K14383LIVW 1	K14382LIVW 1
K14345LBKB 1	K14647LBKB 1	K14246LBKB 1	K14383LBKB 1	K14382LBKB 1
K14345PBR* 1	K14647PBR* 1	K14246PBR* 1	K14383PBR* 1	K14382PBR* 1
K14345TIRB 1	K14647TIRB 1	K14246TIRB 1	K14383TIRB 1	K14382TIRB 1
K14345DBZB 1	K14647DBZB 1	K14246DBZB 1	K14383DBZB 1	K14382DBZB 1
K14345ABSB 1	K14647ABSB 1	K14246ABSB 1	K14383ABSB 1	K14382ABSB 1
K14345TCOB 1	K14647TCOB 1	K14246TCOB 1	K14383TCOB 1	K14382TCOB 1

* Available with the option of either White or Black inserts. Add Suffix 'W' or 'B' to part number when ordering, E.g. KxxxxBSSW.
Where there is no asterix, the final suffix W = White Insert, B = Black Insert, E.g. KxxxxWHIW = Porcelain White finish with White inserts

MOUNTING BOXES
FLUSH 35mm
886ZIC
FLUSH 47mm
878ZIC (for extra wiring space)
DIMENSIONS
86 x 146mm
FIXING CENTRES
120.6mm
BS 1363-2:1995

MOUNTING BOXES
FLUSH 35mm
886ZIC
FLUSH 47mm
878ZIC (for extra wiring space)
DIMENSIONS
86 x 146mm
FIXING CENTRES
120.6mm
BS 1363-2:1995
Neon is only available in white or black
insulated rocker.

Dual Earth: Fitted with two earth terminals to provide a double earth facility for use when installations require a high integrity protective connection as specified within BS 7671: 2008.

MOUNTING BOXES
FLUSH 35mm
886ZIC
FLUSH 47mm
878ZIC (for extra wiring space)
DIMENSIONS
86 x 146mm
FIXING CENTRES
120.6mm
BS 1363-2:1995 (where relevant)
These products are provided with facilities for 'clean earth' connections, and are suitable for non-standard plugs with T shaped earth pins. Refer to non-standard plugs page 240.

MOUNTING BOXES
FLUSH 35mm
866ZIC
FLUSH 46mm
877ZIC (for extra wiring space)
DIMENSIONS
86 x 86mm
FIXING CENTRES
60.3mm
BS 546:1950

MOUNTING BOXES
FLUSH 35mm
866ZIC
FLUSH 46mm
877ZIC (for extra wiring space)
DIMENSIONS
86 x 86mm
FIXING CENTRES
60.3mm
BS 546:1950

* Available with the option of either White or Black inserts. Add Suffix 'W' or 'B' to part number when ordering, E.g. KxxxxBSSW.
Where there is no asterix, the final suffix W = White Insert, B = Black Insert, E.g. KxxxxWHIW = Porcelain White finish with White inserts

Edge™

Multimedia Plates

	4 GANG DP DUAL EARTH SWITCHSOCKET, EURO 4 MODULE 100 X 50MM 13 AMP	2 GANG DP DUAL EARTH SWITCHSOCKET, EURO 6 MODULE 50 X 50MM (X3) 13 AMP	4 GANG DP DUAL EARTH SWITCHSOCKET, EURO 8 MODULE 100 X 50MM (X2) 13 AMP
FINISHES			
BRUSHED STAINLESS STEEL	K14200BSS* 1	K14205BSS* 1	K14100BSS* 1
LACQUERED BRUSHED STEEL	K14200LBS* 1	K14205LBS* 1	K14100LBS* 1
BRUSHED CHROME	K14200BRC* 1	K14205BRC* 1	K14100BRC* 1
POLISHED CHROME	K14200POC* 1	K14205POC* 1	K14100POC* 1
SATIN GOLD	K14200SAG* 1	K14205SAG* 1	K14100SAG* 1
PORCELAIN WHITE	K14200WHIW 1	K14205WHIW 1	K14100WHIW 1
LUSTROUS IVORY	K14200LIVW 1	K14205LIVW 1	K14100LIVW 1
LUSTROUS BLACK	K14200LBKB 1	K14205LBKB 1	K14100LBKB 1
POLISHED BRASS	K14200PBR* 1	K14205PBR* 1	K14100PBR* 1
TEXTURED IRON	K14200TIRB 1	K14205TIRB 1	K14100TIRB 1
DESERT BRONZE	K14200DBZB 1	K14205DBZB 1	K14100DBZB 1
ANTIQUE BRASS	K14200ABSB 1	K14205ABSB 1	K14100ABSB 1
TEXTURED COPPER	K14200TCOB 1	K14205TCOB 1	K14100TCOB 1

LEAD TIMES
Please contact our Customer Services Department on
01268 563 404

* Available with the option of either White or Black inserts. Add Suffix 'W' or 'B' to part number when ordering, E.g. KxxxxBSSW. Where there is no asterix, the final suffix W = White Insert, B = Black Insert, E.g. KxxxxWHIW = Porcelain White finish with White inserts

MOUNTING BOXES
FLUSH 35mm
K14201
FLUSH 47mm
K14202
DIMENSIONS
86 x 442.8mm
BS 1363-2:1995

MOUNTING BOXES
FLUSH 35mm
K14206
FLUSH 47mm
K14207
DIMENSIONS
86 x 407.9mm
BS 1363-2:1995

MOUNTING BOXES
FLUSH 35mm
K14101
FLUSH 47mm
K14102
DIMENSIONS
173 x 293.6mm
BS 1363-2:1995

Dual Earth: Fitted with two earth terminals to provide a double earth facility for use when installations require a high integrity protective connection as specified within BS 7671:2008.

Mains operated products and extra low voltage modules must not be installed within the same frontplate aperture. Refer to BS 7671:2008 for details.

Multimedia Plates

2 GANG DP DUAL EARTH SWITCHSOCKET, EURO 2 MODULE 50 X 50MM (RIGHT SIDE) 13 AMP	2 GANG DP DUAL EARTH SWITCHSOCKET, EURO 2 MODULE 50 X 50MM (LEFT SIDE) 13 AMP	2 GANG DP DUAL EARTH SWITCHSOCKET, EURO 4 MODULE 50 X 50MM (X2) 13 AMP	EURO 8 MODULE 100 X 50MM (X2)	EURO 12 MODULE 150 X 50MM (X2)
K14216BSS* 1	K14217BSS* 1	K14208BSS* 1	K14209BSS* 1	K14210BSS* 1
K14216LBS* 1	K14217LBS* 1	K14208LBS* 1	K14209LBS* 1	K14210LBS* 1
K14216BRC* 1	K14217BRC* 1	K14208BRC* 1	K14209BRC* 1	K14210BRC* 1
K14216POC* 1	K14217POC* 1	K14208POC* 1	K14209POC* 1	K14210POC* 1
K14216SAG* 1	K14217SAG* 1	K14208SAG* 1	K14209SAG* 1	K14210SAG* 1
K14216WHIW 1	K14217WHIW 1	K14208WHIW 1	K14209WHIW 1	K14210WHIW 1
K14216LIVW 1	K14217LIVW 1	K14208LIVW 1	K14209LIVW 1	K14210LIVW 1
K14216LBKB 1	K14217LBKB 1	K14208LBKB 1	K14209LBKB 1	K14210LBKB 1
K14216PBR* 1	K14217PBR* 1	K14208PBR* 1	K14209PBR* 1	K14210PBR* 1
K14216TIRB 1	K14217TIRB 1	K14208TIRB 1	K14209TIRB 1	K14210TIRB 1
K14216DBZB 1	K14217DBZB 1	K14208DBZB 1	K14209DBZB 1	K14210DBZB 1
K14216ABSB 1	K14217ABSB 1	K14208ABSB 1	K14209ABSB 1	K14210ABSB 1
K14216TCOB 1	K14217TCOB 1	K14208TCOB 1	K14209TCOB 1	K14210TCOB 1

* Available with the option of either White or Black inserts. Add Suffix 'W' or 'B' to part number when ordering, E.g. KxxxxBSSW.
Where there is no asterix, the final suffix W = White Insert, B = Black Insert, E.g. KxxxxWHIW = Porcelain White finish with White inserts

MOUNTING BOXES	MOUNTING BOXES	MOUNTING BOXES	MOUNTING BOXES	MOUNTING BOXES
867ZIC	867ZIC	868ZIC	858ZIC	869ZIC
DIMENSIONS	DIMENSIONS	DIMENSIONS	DIMENSIONS	DIMENSIONS
233.3 x 86mm	233.3 x 86mm	320.6 x 86mm	146.4 x 173.3mm	206.3 x 173.3mm
BS 1363-2:1995	BS 1363-2:1995	BS 1363-2:1995	BS 5733:2010	BS 5733:2010

Dual Earth: Fitted with two earth terminals to provide a double earth facility for use when installations require a high integrity protective connection as specified within BS 7671:2008.

Mains operated products and extra low voltage modules must not be installed within the same frontplate aperture.
Refer to BS 7671:2008 for details.

Edge™

Socket Outlets

FINISHES	1 GANG DUAL EARTH 13 AMP		2 GANG DUAL EARTH 13 AMP		1 GANG 2 AMP		1 GANG 5 AMP	
			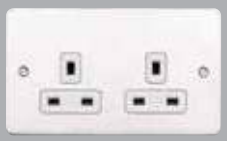					
BRUSHED STAINLESS STEEL	K14780BSS*	1	K14781BSS*	1	K14380BSS*	1	K14381BSS*	1
LACQUERED BRUSHED STEEL	K14780LBS*	1	K14781LBS*	1	K14380LBS*	1	K14381LBS*	1
BRUSHED CHROME	K14780BRC*	1	K14781BRC*	1	K14380BRC*	1	K14381BRC*	1
POLISHED CHROME	K14780POC*	1	K14781POC*	1	K14380POC*	1	K14381POC*	1
SATIN GOLD	K14780SAG*	1	K14781SAG*	1	K14380SAG*	1	K14381SAG*	1
PORCELAIN WHITE	K14780WHIW	1	K14781WHIW	1	K14380WHIW	1	K14381WHIW	1
LUSTROUS IVORY	K14780LIVW	1	K14781LIVW	1	K14380LIVW	1	K14381LIVW	1
LUSTROUS BLACK	K14780LBKB	1	K14781LBKB	1	K14380LBKB	1	K14381LBKB	1
POLISHED BRASS	K14780PBR*	1	K14781PBR*	1	K14380PBR*	1	K14381PBR*	1
TEXTURED IRON	K14780TIRB	1	K14781TIRB	1	K14380TIRB	1	K14381TIRB	1
DESERT BRONZE	K14780DBZB	1	K14781DBZB	1	K14380DBZB	1	K14381DBZB	1
ANTIQUE BRASS	K14780ABSB	1	K14781ABSB	1	K14380ABSB	1	K14381ABSB	1
TEXTURED COPPER	K14780TCOB	1	K14781TCOB	1	K14380TCOB	1	K14381TCOB	1

LEAD TIMES
Please contact our Customer Services Department on
01268 563 404

* Available with the option of either White or Black inserts. Add Suffix 'W' or 'B' to part number when ordering, E.g. KxxxxBSSW. Where there is no asterix, the final suffix W = White Insert, B = Black Insert, E.g. KxxxxWHIW = Porcelain White finish with White inserts

MOUNTING BOXES
FLUSH 35mm
866ZIC
FLUSH 46mm
877ZIC (for extra wiring space)
DIMENSIONS
86 x 86mm
FIXING CENTRES
60.3mm
BS 1363-2:1995

MOUNTING BOXES
FLUSH 35mm
886ZIC
FLUSH 47mm
878ZIC (for extra wiring space)
DIMENSIONS
86 x 146mm
FIXING CENTRES
120.6mm
BS 1363-2:1995

MOUNTING BOXES
FLUSH 25mm
861ZIC
FLUSH 35mm
866ZIC (for extra wiring space)
DIMENSIONS
86 x 86mm
FIXING CENTRES
60.3mm
Earth pin linear operated shutter
BS 546:1950

MOUNTING BOXES
FLUSH 35mm
866ZIC
FLUSH 46mm
877ZIC (for extra wiring space)
DIMENSIONS
86 x 86mm
FIXING CENTRES
60.3mm
BS 546:1950

Dual Earth: Fitted with two earth terminals to provide a double earth facility for use when installations require a high integrity protective connection as specified within BS 7671:2008.

Floor Mounted Euro Frames

1 GANG
EURO 2 MODULE
50 X 50MM

2 GANG
EURO 4 MODULE
100 X 50MM

K14790BSS	1	K14791BSS	1
K14790LBS	1	K14791LBS	1
K14790BRC	1	K14791BRC	1
K14790POC	1	K14791POC	1
K14790SAG	1	K14791SAG	1
K14790WHI	1	K14791WHI	1
K14790LIV	1	K14791LIV	1
K14790LBK	1	K14791LBK	1
K14790PBR	1	K14791PBR	1
K14790TIR	1	K14791TIR	1
K14790DBZ	1	K14791DBZ	1
K14790ABS	1	K14791ABS	1
K14790TCO	1	K14791TCO	1

MOUNTING BOXES
FLUSH 1 GANG
866ZIC
DIMENSIONS
102 x 86mm
FIXING CENTRES
60.3mm
Boxes must have a minimum depth of 35mm.
BS 5733:2010

MOUNTING BOXES
FLUSH 2 GANG
886ZIC
DIMENSIONS
102 x 146mm
FIXING CENTRES
120.6mm
Boxes must have a minimum depth of 35mm.
BS 5733:2010

Edge™

Key Operated Socket Outlet and Switch

Shaver/Toothbrush Supply Units

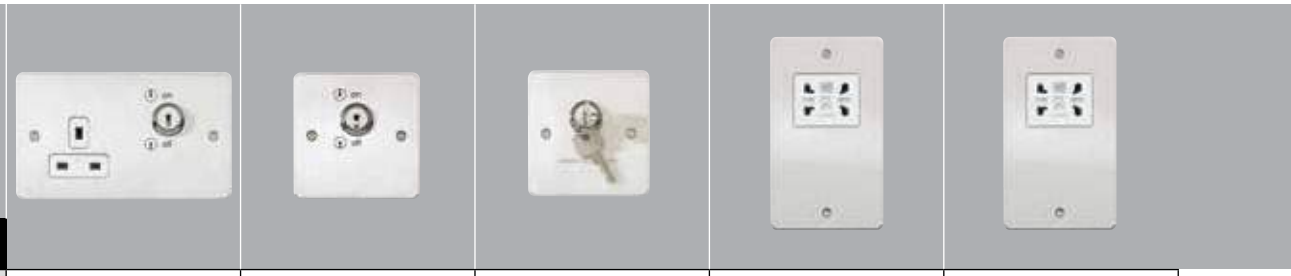

FINISHES	1 GANG DP DUAL EARTH 13 AMP		1 GANG DP SWITCH 20 AMP		1 GANG DP FIRE ALARM ISOLATOR SWITCH 20 AMP		DUAL VOLTAGE OUTPUT 115/230V INPUT 220/240V 50/60HZ		120/130 V INPUT (NON UK)	
BRUSHED STAINLESS STEEL	K14355BSS*	1	K14378BSS	1	K14379BSS	1	K14709BSS*	1	K14710BSS*	1
LACQUERED BRUSHED STEEL	K14355LBS*	1					K14709LBS*	1	K14710LBS*	1
BRUSHED CHROME	K14355BRC*	1					K14709BRC*	1	K14710BRC*	1
POLISHED CHROME	K14355POC*	1					K14709POC*	1	K14710POC*	1
SATIN GOLD	K14355SAG*	1					K14709SAG*	1	K14710SAG*	1
PORCELAIN WHITE	K14355WHIW	1					K14709WHIW	1	K14710WHIW	1
LUSTROUS IVORY	K14355LIVW	1					K14709LIVW	1	K14710LIVW	1
LUSTROUS BLACK	K14355LBKB	1					K14709LBKB	1	K14710LBKB	1
POLISHED BRASS	K14355PBR*	1					K14709PBR*	1	K14710PBR*	1
TEXTURED IRON	K14355TIRB	1					K14709TIRB	1	K14710TIRB	1
DESERT BRONZE	K14355DBZB	1					K14709DBZB	1	K14710DBZB	1
ANTIQUE BRASS	K14355ABSB	1					K14709ABSB	1	K14710ABSB	1
TEXTURED COPPER	K14355TCOB	1					K14709TCOB	1	K14710TCOB	1

LEAD TIMES
Please contact our Customer Services Department on
01268 563 404

* Available with the option of either White or Black inserts. Add Suffix 'W' or 'B' to part number when ordering, E.g. KxxxxBSSW. Where there is no asterix, the final suffix W = White Insert, B = Black Insert, E.g. KxxxxWHIW = Porcelain White finish with White inserts.

MOUNTING BOXES
FLUSH 47mm
878ZIC
DIMENSIONS
86 x 146mm
FIXING CENTRES
120.6mm
BS 1363-2:1995

MOUNTING BOXES
FLUSH 46mm
877ZIC
DIMENSIONS
86 x 86mm
FIXING CENTRES
60.3mm
BS EN 60669-1:1999

MOUNTING BOX
FLUSH 46mm
877ZIC
DIMENSIONS
86 x 86mm
FIXING CENTRES
60.3mm
BS 60669-2-4: 2005
The isolator has primarily been introduced for use in alarm systems that must comply with BS 5839-1

MOUNTING BOXES
FLUSH
878ZIC
This design incorporates a double wound isolating transformer rated 20VA at 230 or 115 volts and meets BS EN 61558-2-5:1998, making it safe for use in bathrooms.
Insertion of a shaver/toothbrush plug automatically switches on output by energising the primary side of the isolating transformer – removal automatically switches it off. The transformer is protected against overload by an automatic solid state overload device with automatic resetting.
DIMENSIONS
146 x 86mm
FIXING CENTRES
120.6mm
BS EN 61558-2-5:1998

Dual Earth: Fitted with two earth terminals to provide a double earth facility for use when installations require a high integrity protective connection as specified within BS 7671:2008.

Connection Units Switched

DP 13 AMP	DP WITH NEON** 13 AMP	DP WITH FLEX OUTLET 13 AMP	DP WITH NEON** & FLEX OUTLET 13 AMP
K14941BSS* 1	K14961BSS* 1	K14931BSS* 1	K14971BSS* 1
K14941LBS* 1	K14961LBS* 1	K14931LBS* 1	K14971LBS* 1
K14941BRC* 1	K14961BRC* 1	K14931BRC* 1	K14971BRC* 1
K14941POC* 1	K14961POC* 1	K14931POC* 1	K14971POC* 1
K14941SAG* 1	K14961SAG* 1	K14931SAG* 1	K14971SAG* 1
K14941WHIW 1	K14961WHIW 1	K14931WHIW 1	K14971WHIW 1
K14941LIVW 1	K14961LIVW 1	K14931LIVW 1	K14971LIVW 1
K14941LBKB 1	K14961LBKB 1	K14931LBKB 1	K14971LBKB 1
K14941PBR* 1	K14961PBR* 1	K14931PBR* 1	K14971PBR* 1
K14941TIRB 1	K14961TIRB 1	K14931TIRB 1	K14971TIRB 1
K14941DBZB 1	K14961DBZB 1	K14931DBZB 1	K14971DBZB 1
K14941ABSB 1	K14961ABSB 1	K14931ABSB 1	K14971ABSB 1
K14941TCOB 1	K14961TCOB 1	K14931TCOB 1	K14971TCOB 1

* Available with the option of either White or Black inserts. Add Suffix 'W' or 'B' to part number when ordering, E.g. KxxxxBSSW.
Where there is no asterix, the final suffix W = White Insert, B = Black Insert, E.g. KxxxxWHIW = Porcelain White finish with White inserts

MOUNTING BOXES
FLUSH 35mm
866ZIC
FLUSH 46mm
877ZIC (for extra wiring space)
DIMENSIONS
86 x 86mm
FIXING CENTRES
60.3mm
BS 1363-4:1995

MOUNTING BOXES
FLUSH 35mm
866ZIC
FLUSH 46mm
877ZIC (for extra wiring space)
DIMENSIONS
86 x 86mm
FIXING CENTRES
60.3mm
BS 1363-4:1995
**NOTE
Neon is only available in white or black insulated rocker.

MOUNTING BOXES
FLUSH 35mm
866ZIC
FLUSH 46mm
877ZIC (for extra wiring space)
DIMENSIONS
86 x 86mm
FIXING CENTRES
60.3mm
BS 1363-4:1995

MOUNTING BOXES
FLUSH 35mm
866ZIC
FLUSH 46mm
877ZIC (for extra wiring space)
DIMENSIONS
86 x 86mm
FIXING CENTRES
60.3mm
BS 1363-4:1995
**NOTE
Neon is only available in white or black insulated rocker.

Matching metal capped fuse carriers are standard on all Edge™ Connection Units (except WHI and Neon).

Edge™

Connection Units Unswitched

FINISHES	13 AMP	WITH NEON 13 AMP	WITH FLEX OUTLET 13 AMP	WITH NEON & FLEX OUTLET 13 AMP
BRUSHED STAINLESS STEEL	K14948BSS* 1	K14958BSS* 1	K14989BSS* 1	K14978BSS* 1
LACQUERED BRUSHED STEEL	K14948LBS* 1	K14958LBS* 1	K14989LBS* 1	K14978LBS* 1
BRUSHED CHROME	K14948BRC* 1	K14958BRC* 1	K14989BRC* 1	K14978BRC* 1
POLISHED CHROME	K14948POC* 1	K14958POC* 1	K14989POC* 1	K14978POC* 1
SATIN GOLD	K14948SAG* 1	K14958SAG* 1	K14989SAG* 1	K14978SAG* 1
PORCELAIN WHITE	K14948WHIW 1	K14958WHIW 1	K14989WHIW 1	K14978WHIW 1
LUSTROUS IVORY	K14948LIVW 1	K14958LIVW 1	K14989LIVW 1	K14978LIVW 1
LUSTROUS BLACK	K14948LBKB 1	K14958LBKB 1	K14989LBKB 1	K14978LBKB 1
POLISHED BRASS	K14948PBR* 1	K14958PBR* 1	K14989PBR* 1	K14978PBR* 1
TEXTURED IRON	K14948TIRB 1	K14958TIRB 1	K14989TIRB 1	K14978TIRB 1
DESERT BRONZE	K14948DBZB 1	K14958DBZB 1	K14989DBZB 1	K14978DBZB 1
ANTIQUE BRASS	K14948ABSB 1	K14958ABSB 1	K14989ABSB 1	K14978ABSB 1
TEXTURED COPPER	K14948TCOB 1	K14958TCOB 1	K14989TCOB 1	K14978TCOB 1

LEAD TIMES
Please contact our Customer Services Department on
01268 563 404

* Available with the option of either White or Black inserts. Add Suffix 'W' or 'B' to part number when ordering, E.g. KxxxxBSSW.
Where there is no asterix, the final suffix W = White Insert, B = Black Insert, E.g. KxxxxWHIW = Porcelain White finish with White inserts.

13 AMP	WITH NEON 13 AMP	WITH FLEX OUTLET 13 AMP	WITH NEON & FLEX OUTLET 13 AMP
MOUNTING BOXES	**MOUNTING BOXES**	**MOUNTING BOXES**	**MOUNTING BOXES**
FLUSH 35mm	**FLUSH 35mm**	**FLUSH 35mm**	**FLUSH 35mm**
866ZIC	866ZIC	866ZIC	866ZIC
FLUSH 46mm	**FLUSH 46mm**	**FLUSH 46mm**	**FLUSH 46mm**
877ZIC (for extra wiring space)	877ZIC (for extra wiring space)	877ZIC (for extra wiring space)	877ZIC (for extra wiring space)
DIMENSIONS	**DIMENSIONS**	**DIMENSIONS**	**DIMENSIONS**
86 x 86mm	86 x 86mm	86 x 86mm	86 x 86mm
FIXING CENTRES	**FIXING CENTRES**	**FIXING CENTRES**	**FIXING CENTRES**
60.3mm	60.3mm	60.3mm	60.3mm
BS 1363-4:1995	BS 1363-4:1995	BS 1363-4:1995	BS 1363-4:1995

Matching metal capped fuse carriers are standard on all Edge™ Connection Units (except WHI and Neon).

Switches

1 GANG SP 2 WAY 20 AMP	2 GANG SP 2 WAY 20 AMP	3 GANG SP 2 WAY 10 AMP	1 GANG SP 2 WAY WITH LARGE ROCKER 20 AMP	2 GANG SP 2 WAY WITH LARGE ROCKERS 20 AMP
		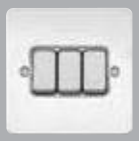		
K14371BSS* 1	K14372BSS* 1	K14373BSS* 1	K13471BSS* 1	K13472BSS* 1
K14371LBS* 1	K14372LBS* 1	K14373LBS* 1	K13471LBS* 1	K13472LBS* 1
K14371BRC* 1	K14372BRC* 1	K14373BRC* 1	K13471BRC* 1	K13472BRC* 1
K14371POC* 1	K14372POC* 1	K14373POC* 1	K13471POC* 1	K13472POC* 1
K14371SAG* 1	K14372SAG* 1	K14373SAG* 1	K13471SAG* 1	K13472SAG* 1
K14371WHIW 1	K14372WHIW 1	K14373WHIW 1	K13471WHIW 1	K13472WHIW 1
K14371LIVW 1	K14372LIVW 1	K14373LIVW 1	K13471LIVW 1	K13472LIVW 1
K14371LBKB 1	K14372LBKB 1	K14373LBKB 1	K13471LBKB 1	K13472LBKB 1
K14371PBR* 1	K14372PBR* 1	K14373PBR* 1	K13471PBR* 1	K13472PBR* 1
K14371TIRB 1	K14372TIRB 1	K14373TIRB 1	K13471TIRB 1	K13472TIRB 1
K14371DBZB 1	K14372DBZB 1	K14373DBZB 1	K13471DBZB 1	K13472DBZB 1
K14371ABSB 1	K14372ABSB 1	K14373ABSB 1	K13471ABSB 1	K13472ABSB 1
K14371TCOB 1	K14372TCOB 1	K14373TCOB 1	K13471TCOB 1	K13472TCOB 1

* Available with the option of either White or Black inserts. Add Suffix 'W' or 'B' to part number when ordering, E.g. KxxxxBSSW.
Where there is no asterix, the final suffix W = White Insert, B = Black Insert, E.g. KxxxxWHIW = Porcelain White finish with White inserts.

MOUNTING BOXES FLUSH 861ZIC DIMENSIONS 86 x 86mm FIXING CENTRES 60.3mm BS EN 60669-1:1999	MOUNTING BOXES FLUSH 861ZIC DIMENSIONS 86 x 86mm FIXING CENTRES 60.3mm BS EN 60669-1:1999	MOUNTING BOXES FLUSH 861ZIC DIMENSIONS 86 x 86mm FIXING CENTRES 60.3mm BS EN 60669-1:1999	MOUNTING BOXES FLUSH 861ZIC DIMENSIONS 86 x 86mm ROCKER DIMENSIONS 22 x 40mm FIXING CENTRES 120.6mm BS 60669-1:1999	MOUNTING BOXES FLUSH 861ZIC DIMENSIONS 86 x 86mm ROCKER DIMENSIONS 22 x 40mm FIXING CENTRES 120.6mm BS 60669-1:1999

Edge™

	High Current Switches		Cooker Control Unit	3 Pole Fan Isolator	Triple Pole & Neutral Switch
	1 GANG DP WITH NEON 32 AMP	1 GANG DP WITH NEON 50 AMP	DP SWITCH AND 13 AMP SWITCHSOCKET OUTLET WITH NEONS 45 AMP	10 AMP	32 AMP
FINISHES					
BRUSHED STAINLESS STEEL	K14305BSS* 1	K14336BSS* 1	K14361BSS* 1	K14859BSS* 1	K14114BSS* 1
LACQUERED BRUSHED STEEL	K14305LBS* 1		K14361LBS* 1	K14859LBS* 1	K14114LBS* 1
BRUSHED CHROME	K14305BRC* 1		K14361BRC* 1	K14859BRC* 1	K14114BRC* 1
POLISHED CHROME	K14305POC* 1		K14361POC* 1	K14859POC* 1	K14114POC* 1
SATIN GOLD	K14305SAG* 1		K14361SAG* 1	K14859SAG* 1	K14114SAG* 1
PORCELAIN WHITE	K14305WHIW 1		K14361WHIW 1	K14859WHIW 1	K14114WHIW 1
LUSTROUS IVORY	K14305LIVW 1		K14361LIVW 1	K14859LIVW 1	K14114LIVW 1
LUSTROUS BLACK	K14305LBKB 1		K14361LBKB 1	K14859LBKB 1	K14114LBKB 1
POLISHED BRASS	K14305PBR* 1		K14361PBR* 1	K14859PBR* 1	K14114PBR* 1
TEXTURED IRON	K14305TIRB 1		K14361TIRB 1	K14859TIRB 1	K14114TIRB 1
DESERT BRONZE	K14305DBZB 1		K14361DBZB 1	K14859DBZB 1	K14114DBZB 1
ANTIQUE BRASS	K14305ABSB 1		K14361ABSB 1	K14859ABSB 1	K14114ABSB 1
TEXTURED COPPER	K14305TCOB 1		K14361TCOB 1	K14859TCOB 1	K14114TCOB 1

LEAD TIMES
Please contact our Customer Services Department on
01268 563 404

* Available with the option of either White or Black inserts. Add Suffix 'W' or 'B' to part number when ordering, E.g. KxxxxBSSW. Where there is no asterix, the final suffix W = White Insert, B = Black Insert, E.g. KxxxxWHIW = Porcelain White finish with White inserts

MOUNTING BOXES
FLUSH 35mm
866ZIC
877ZIC (for extra wiring space)
DIMENSIONS
86 x 86mm
FIXING CENTRES
60.3mm
BS EN 60669-1:1999

MOUNTING BOXES
FLUSH 47mm
878ZIC
DIMENSIONS
86 x 86mm
FIXING CENTRES
60.3mm
BS EN 60669-1:1999

MOUNTING BOXES
FLUSH 47mm
878ZIC
45A DP Main Switch and 13A Switchsocket outlet (Up to 10mm² conductor).
Rotary operated shutter.
DIMENSIONS
86 x 146mm
FIXING CENTRES
120.6mm
BS 4177:1992
To allow adequate wiring space, mounting box must be installed 6mm to 10mm sub flush to the wall surface.

MOUNTING BOXES
FLUSH 46mm
877ZIC
DIMENSIONS
86 x 186mm
FIXING CENTRES
60.3mm
BS EN 60947-3:1999
To allow adequate wiring space, mounting box must be installed 6mm to 10mm sub flush to the wall surface.

MOUNTING BOXES:
FLUSH
5268ALM (Mounting box should be mounted 6 to 10mm sub-flush to the wall)
DIMENSIONS
203 x 140mm
TERMINAL CAPACITY
16mm² conductors
BS EN 60947-3:1999

Intelligent Dimmers

2 WAY SINGLE 230V A.C. 50HZ 60W/VA MIN. 500W/400VA MAX.	2 WAY DOUBLE 230V A.C. 50HZ 60W/VA MIN. 450W/360VA MAX. FOR EACH DIMMER	2 WAY SINGLE 230V A.C. 50HZ 40W/VA MIN. 300W/240VA MAX.	2 WAY DOUBLE 230V A.C. 50HZ 40W/VA MIN. 300W/240VA MAX. FOR EACH DIMMER
K14301BSS 1	K14302BSS 1	K14521BSS 1	K14522BSS 1
K14301LBS 1	K14302LBS 1	K14521LBS 1	K14522LBS 1
K14301BRC 1	K14302BRC 1	K14521BRC 1	K14522BRC 1
K14301POC 1	K14302POC 1	K14521POC 1	K14522POC 1
K14301SAG 1	K14302SAG 1	K14521SAG 1	K14522SAG 1
K14301WHI 1	K14302WHI 1	K14521WHI 1	K14522WHI 1
K14301LIV 1	K14302LIV 1	K14521LIV 1	K14522LIV 1
K14301LBK 1	K14302LBK 1	K14521LBK 1	K14522LBK 1
K14301PBR 1	K14302PBR 1	K14521PBR 1	K14522PBR 1
K14301TIR 1	K14302TIR 1	K14521TIR 1	K14522TIR 1
K14301DBZ 1	K14302DBZ 1	K14521DBZ 1	K14522DBZ 1
K14301ABS 1	K14302ABS 1	K14521ABS 1	K14522ABS 1
K14301TCO 1	K14302TCO 1	K14521TCO 1	K14522TCO 1

* Available with the option of either White or Black inserts. Add Suffix 'W' or 'B' to part number when ordering, E.g. KxxxxBSSW.
Where there is no asterix, the final suffix W = White Insert, B = Black Insert, E.g. KxxxxWHIW = Porcelain White finish with White inserts

MOUNTING BOXES	MOUNTING BOXES	MOUNTING BOXES	MOUNTING BOXES
FLUSH	FLUSH	FLUSH	FLUSH
866ZIC – 35mm deep min	886ZIC – 35mm deep min	866ZIC – 35mm deep min	866ZIC – 35mm deep min
DIMENSIONS	DIMENSIONS	DIMENSIONS	DIMENSIONS
86 x 86mm	86 x 146mm	86 x 86mm	86 x 86mm
FIXING CENTRES	FIXING CENTRES	FIXING CENTRES	FIXING CENTRES
60.3mm	120.6mm	60.3mm	60.3mm

These dimmers employ the latest micro-controller based circuitry to provide electronic soft-start and overload protection. They are suitable for use with good quality electronic or wire-wound transformers. Can also be used with good quality halogen lamps incorporating GU10 bases. Please check with lamp manufacturer to determine suitability.
NOT SUITABLE FOR FLUORESCENT LOADS.
Conform to latest standards BS EN 60669-2-1.
All intelligent dimmers have a combined push-on/push-off switch and rotary dimmer control, and are suitable for one or two-way switching.

Edge™

Toggle Switch Frontplates

SUPPLIED WITH GRIDS

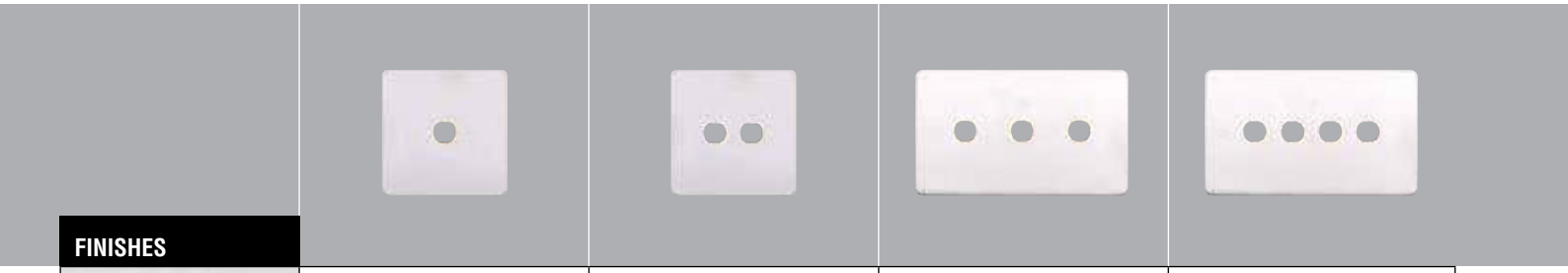

FINISHES	1 MODULE		2 MODULE		3 MODULE		4 MODULE	
BRUSHED STAINLESS STEEL	K14431BSS	1	K14432BSS	1	K14433BSS	1	K14434BSS	1
LACQUERED BRUSHED STEEL	K14431LBS	1	K14432LBS	1	K14433LBS	1	K14434LBS	1
BRUSHED CHROME	K14431BRC	1	K14432BRC	1	K14433BRC	1	K14434BRC	1
POLISHED CHROME	K14431POC	1	K14432POC	1	K14433POC	1	K14434POC	1
SATIN GOLD	K14431SAG	1	K14432SAG	1	K14433SAG	1	K14434SAG	1
PORCELAIN WHITE	K14431WHI	1	K14432WHI	1	K14433WHI	1	K14434WHI	1
LUSTROUS IVORY	K14431LIV	1	K14432LIV	1	K14433LIV	1	K14434LIV	1
LUSTROUS BLACK	K14431LBK	1	K14432LBK	1	K14433LBK	1	K14434LBK	1
POLISHED BRASS	K14431PBR	1	K14432PBR	1	K14433PBR	1	K14434PBR	1
TEXTURED IRON	K14431TIR	1	K14432TIR	1	K14433TIR	1	K14434TIR	1
DESERT BRONZE	K14431DBZ	1	K14432DBZ	1	K14433DBZ	1	K14434DBZ	1
ANTIQUE BRASS	K14431ABS	1	K14432ABS	1	K14433ABS	1	K14434ABS	1
TEXTURED COPPER	K14431TCO	1	K14432TCO	1	K14433TCO	1	K14434TCO	1

LEAD TIMES
Please contact our Customer Services Department on
01268 563 404

MOUNTING BOX
FLUSH
891ALM
DIMENSIONS
86 x 86mm
BS 5733:2010

MOUNTING BOX
FLUSH
891ALM
DIMENSIONS
86 x 86mm
BS 5733:2010

MOUNTING BOX
FLUSH
892ALM
DIMENSIONS
86 x 146mm
BS 5733:2010

MOUNTING BOX
FLUSH
892ALM
DIMENSIONS
86 x 146mm
BS 5733:2010

Toggle Switch Modules

Grid Plus Modular Frontplates

SUPPLIED WITH GRIDS

SP 1 WAY 20 AMP		SP 2 WAY 20 AMP		DP 1 WAY 20 AMP		INTERMEDIATE 20 AMP		1 MODULE		2 MODULE	
K14891BSS	1	K14892BSS	1	K14896BSS	1	K14893BSS	1	K14331BSS	1	K14332BSS	1
K14891LBS	1	K14892LBS	1	K14896LBS	1	K14893LBS	1	K14331LBS	1	K14332LBS	1
K14891BRC	1	K14892BRC	1	K14896BRC	1	K14893BRC	1	K14331BRC	1	K14332BRC	1
K14891POC	1	K14892POC	1	K14896POC	1	K14893POC	1	K14331POC	1	K14332POC	1
K14891SAG	1	K14892SAG	1	K14896SAG	1	K14893SAG	1	K14331SAG	1	K14332SAG	1
K14891WHI	1	K14892WHI	1	K14896WHI	1	K14893WHI	1	K14331WHI	1	K14332WH	1
K14891LIV	1	K14892LIV	1	K14896LIV	1	K14893LIV	1	K14331LIV	1	K14332LIV	1
K14891LBK	1	K14892LBK	1	K14896LBK	1	K14893LBK	1	K14331LBK	1	K14332LBK	1
K14891PBR	1	K14892PBR	1	K14896PBR	1	K14893PBR	1	K14331PBR	1	K14332PBR	1
K14891TIR	1	K14892TIR	1	K14896TIR	1	K14893TIR	1	K14331TIR	1	K14332TIR	1
K14891DBZ	1	K14892DBZ	1	K14896DBZ	1	K14893DBZ	1	K14331DBZ	1	K14332DBZ	1
K14891ABS	1	K14892ABS	1	K14896ABS	1	K14893ABS	1	K14331ABS	1	K14332ABS	1
K14891TCO	1	K14892TCO	1	K14896TCO	1	K14893TCO	1	K14331TCO	1	K14332TCO	1
BS EN 60699-1:1999		BS EN 60699-1:1999		BS EN 60699-1:1999		BS EN 60699-1:1999		MOUNTING BOX FLUSH 891ALM DIMENSIONS 86 x 86mm BS 5733:2010		MOUNTING BOX FLUSH 891ALM DIMENSIONS 86 x 86mm BS 5733:2010	

Edge™

Grid Plus
Modular Frontplates
SUPPLIED WITH GRIDS

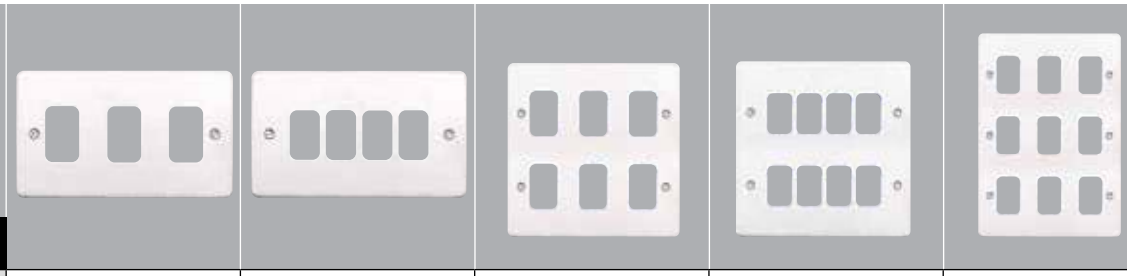

FINISHES	3 MODULE		4 MODULE		6 MODULE		8 MODULE		9 MODULE	
BRUSHED STAINLESS STEEL	K14333BSS	1	K14334BSS	1	K14346BSS	1	K14348BSS	1	K14349BSS	1
LACQUERED BRUSHED STEEL	K14333LBS	1	K14334LBS	1	K14346LBS	1	K14348LBS	1	K14349LBS	1
BRUSHED CHROME	K14333BRC	1	K14334BRC	1	K14346BRC	1	K14348BRC	1	K14349BRC	1
POLISHED CHROME	K14333POC	1	K14334POC	1	K14346POC	1	K14348POC	1	K14349POC	1
SATIN GOLD	K14333SAG	1	K14334SAG	1	K14346SAG	1	K14348SAG	1	K14349SAG	1
PORCELAIN WHITE	K14333WHI	1	K14334WHI	1	K14346WHI	1	K14348WHI	1	K14349WHI	1
LUSTROUS IVORY	K14333LIV	1	K14334LIV	1	K14346LIV	1	K14348LIV	1	K14349LIV	1
LUSTROUS BLACK	K14333LBK	1	K14334LBK	1	K14346LBK	1	K14348LBK	1	K14349LBK	1
POLISHED BRASS	K14333PBR	1	K14334PBR	1	K14346PBR	1	K14348PBR	1	K14349PBR	1
TEXTURED IRON	K14333TIR	1	K14334TIR	1	K14346TIR	1	K14348TIR	1	K14349TIR	1
DESERT BRONZE	K14333DBZ	1	K14334DBZ	1	K14346DBZ	1	K14348DBZ	1	K14349DBZ	1
ANTIQUE BRASS	K14333ABS	1	K14334ABS	1	K14346ABS	1	K14348ABS	1	K14349ABS	1
TEXTURED COPPER	K14333TCO	1	K14334TCO	1	K14346TCO	1	K14348TCO	1	K14349TCO	1

LEAD TIMES
Please contact our Customer Services Department on
01268 563 404

3 MODULE	4 MODULE	6 MODULE	8 MODULE	9 MODULE
MOUNTING BOX FLUSH 892ALM	MOUNTING BOX FLUSH 892ALM	MOUNTING BOX FLUSH 893ALM	MOUNTING BOX FLUSH 893ALM	MOUNTING BOX FLUSH 895ALM
DIMENSIONS 86 x 146mm	DIMENSIONS 86 x 146mm	DIMENSIONS 146 x 146mm	DIMENSIONS 146 x 146mm	DIMENSIONS 206 x 146mm
BS 5733:2010	BS 5733:2010	BS 5733:2010	BS 5733:2010	BS 5733:2010

Grid Plus Modular Frontplates

SUPPLIED WITH GRIDS

Grid Plus Spare Mounting Frames

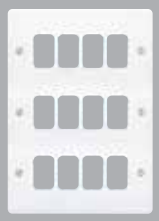

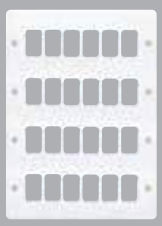

12 MODULE		18 MODULE		24 MODULE		1 MODULE ARCHITRAVE		1 MODULE MOUNTING FRAME		2 MODULE MOUNTING FRAME	
K14352BSS	1	K14358BSS	1	K14354BSS	1	K14401BSS	1	K14701	10	K14702	10
K14352LBS	1	K14358LBS	1	K14354LBS	1	K14401LBS	1				
K14352BRC	1	K14358BRC	1	K14354BRC	1	K14401BRC	1				
K14352POC	1	K14358POC	1	K14354POC	1	K14401POC	1				
K14352SAG	1	K14358SAG	1	K14354SAG	1	K14401SAG	1				
K14352WHI	1	K14358WHI	1	K14354WHI	1	K14401WHI	1				
K14352LIV	1	K14358LIV	1	K14354LIV	1	K14401LIV	1				
K14352LBK	1	K14358LBK	1	K14354LBK	1	K14401LBK	1				
K14352PBR	1	K14358PBR	1	K14354PBR	1	K14401PBR	1				
K14352TIR	1	K14358TIR	1	K14354TIR	1	K14401TIR	1				
K14352DBZ	1	K14358DBZ	1	K14354DBZ	1	K14401DBZ	1				
K14352ABS	1	K14358ABS	1	K14354ABS	1	K14401ABS	1				
K14352TCO	1	K14358TCO	1	K14354TCO	1	K14401TCO	1				
MOUNTING BOX FLUSH 895ALM DIMENSIONS 206 x 146mm BS 5733:2010		MOUNTING BOX FLUSH 898ALM DIMENSIONS 206 x 206mm BS 5733:2010		MOUNTING BOX FLUSH 900ALM DIMENSIONS 207 x 267mm BS 5733:2010		MOUNTING BOX FLUSH 3891ZIC DIMENSIONS 38.8 x 91.75 BS 5733:2010					

Edge™

Grid Plus Spare Mounting Frames

Switch Modules

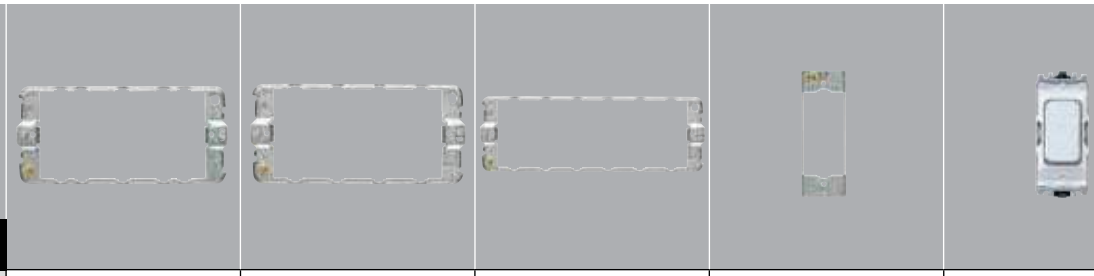

FINISHES	3 MODULE MOUNTING FRAME		4 MODULE MOUNTING FRAME		6 MODULE MOUNTING FRAME		1 MODULE ARCHITRAVE MOUNTING FRAME		BLANK INSERT	
BRUSHED STAINLESS STEEL	K14703	10	K14704	10	K14706	10	K14801	10	K4880BSS*	1
LACQUERED BRUSHED STEEL									K4880LBS*	1
BRUSHED CHROME									K4880BRC*	1
POLISHED CHROME									K4880POC*	1
SATIN GOLD									K4880SAG*	1
MK WHITE (PLASTIC ROCKER)									K4880WHI	10
LUSTROUS IVORY									K4880LIVW	1
LUSTROUS BLACK									K4880LBKB	1
POLISHED BRASS									K4880PBR*	1
TEXTURED IRON									K4880TIRB	1
DESERT BRONZE									K4880DBZB	1
ANTIQUE BRASS									K4880ABSB	1
TEXTURED COPPER									K4880TCOB	1

LEAD TIMES
Please contact our Customer Services Department on
01268 563 404

Will only fit MK Mounting Box 3891ZIC

* Available with the option of either White or Black inserts. Add Suffix 'W' or 'B' to part number when ordering, E.g. KxxxxBSSW.
Where there is no asterix, the final suffix W = White Insert, B = Black Insert, E.g. KxxxxLIVW Lustrous Ivory finish with white inserts

BS 5733:2010

Switch Modules
10 Amp

SP 1 WAY 10 AMP		DP 1 WAY 10 AMP		SP 2 WAY 10 AMP		SP 2 WAY RETRACTIVE 10 AMP		SP 2 WAY RED RETRACTIVE 10 AMP		SP 2 WAY RETRACTIVE MARKED BELL SYMBOL 10 AMP	
K4881BSS*	1	K4981BSS*	1	K4882BSS*	1	K4885BSS*	1				
K4881LBS*	1	K4981LBS*	1	K4882LBS*	1	K4885LBS*	1				
K4881BRC*	1	K4981BRC*	1	K4882BRC*	1	K4885BRC*	1				
K4881POC*	1	K4981POC*	1	K4882POC*	1	K4885POC*	1				
K4881SAG*	1	K4981SAG*	1	K4882SAG*	1	K4885SAG*	1				
K4881WHI	10	K4981WHI	10	K4882WHI	10	K4885WHI	10	K4885RED	1	K4885BWHI	1
K4881LIVW	1	K4981LIVW	1	K4882LIVW	1	K4885LIVW	1	K4885REDB	1	K4885BBLK	1
K4881LBKB	1	K4981LBKB	1	K4882LBKB	1	K4885LBKB	1				
K4881PBR*	1	K4981PBR*	1	K4882PBR*	1	K4885PBR*	1				
K4881TIRB	1	K4981TIRB	1	K4882TIRB	1	K4885TIRB	1				
K4881DBZB	1	K4981DBZB	1	K4882DBZB	1	K4885DBZB	1				
K4881ABSB	1	K4981ABSB	1	K4882ABSB	1	K4885ABSB	1				
K4881TCOB	1	K4981TCOB	1	K4882TCOB	1	K4885TCOB	1				

* Available with the option of either White or Black inserts. Add Suffix 'W' or 'B' to part number when ordering, E.g. KxxxxBSSW.
Where there is no asterix, the final suffix W = White Insert, B = Black Insert, E.g. KxxxxLIVW Lustrous Ivory finish with white inserts

BS EN 60669-1:1999

BS EN 60669-1:1999

BS EN 60669-1:1999

NOTE
Push switches are not designed for fluorescent loads.
BS EN 60669-1:1999

NOTE
Push switches are not designed for fluorescent loads.
BS EN 60669-1:1999

NOTE
Push switches are not designed for fluorescent loads.
BS EN 60669-1:1999

Edge™

Switch Modules 10 Amp

Switch Modules 20 Amp

FINISHES	SP 2 WAY RETRACTIVE MARKED 'PRESS' 10 AMP		2 WAY CENTRE OFF RETRACTIVE 10 AMP		SP 1 WAY 20 AMP		DP 1 WAY PUSH TO MAKE 20 AMP		DP 1 WAY RED ROCKER PUSH TO MAKE 20 AMP	
BRUSHED STAINLESS STEEL	K4885PWHI K4885PBLK	10 1	K4900BSS*	1	K4891BSS*	1	K4910BSS*	1	K4910RED K4910REDB	10 1
LACQUERED BRUSHED STEEL			K4900LBS*	1	K4891LBS*	1	K4910LBS*	1		
BRUSHED CHROME			K4900BRC*	1	K4891BRC*	1	K4910BRC*	1		
POLISHED CHROME			K4900POC*	1	K4891POC*	1	K4910POC*	1		
SATIN GOLD			K4900SAG*	1	K4891SAG*	1	K4910SAG*	1		
MK WHITE (PLASTIC ROCKER)			K4900WHI	10	K4891WHI	10	K4910WHI	10		
LUSTROUS IVORY			K4900LIVW	1	K4891LIVW	1	K4910LIVW	1		
LUSTROUS BLACK			K4900LBKB	1	K4891LBKB	1	K4910LBKB	1		
POLISHED BRASS			K4900PBR*	1	K4891PBR*	1	K4910PBR*	1		
TEXTURED IRON			K4900TIRB	1	K4891TIRB	1	K4910TIRB	1		
DESERT BRONZE			K4900DBZB	1	K4891DBZB	1	K4910DBZB	1		
ANTIQUE BRASS			K4900ABSB	1	K4891ABSB	1	K4910ABSB	1		
TEXTURED COPPER			K4900TCOB	1	K4891TCOB	1	K4910TCOB	1		

LEAD TIMES
Please contact our Customer Services Department on
01268 563 404

* Available with the option of either White or Black inserts. Add Suffix 'W' or 'B' to part number when ordering, E.g. KxxxxBSSW.
Where there is no asterix, the final suffix W = White Insert, B = Black Insert, E.g. KxxxxLIVW Lustrous Ivory finish with white inserts

NOTE
Push switches are not designed for fluorescent loads.
BS EN 60669-1:1999

NOTE
Push switches are not designed for fluorescent loads.
BS EN 60669-1:1999

BS EN 60669-1:1999

NOTE
Push switches are not designed for fluorescent loads.
BS EN 60669-1:1999

NOTE
Push switches are not designed for fluorescent loads.
BS EN 60669-1:1999

Switch Modules 20 Amp

DP 1 WAY PUSH TO BREAK RETRACTIVE 20 AMP	DP 1 WAY RED ROCKER PUSH TO BREAK RETRACTIVE 20 AMP	SP 2 WAY 20 AMP	SP 2 WAY RED ROCKER 20 AMP	SP 2 WAY SWITCH WITH INTEGRAL NEON LOCATOR 20 AMP	SP 2 WAY AND CENTRE OFF 20 AMP
K4915WHI 10	K4915RED 10	K4892BSS* 1	K4892RED 10	K4892LWHI 10	K4899BSS* 1
K4915BLK 10	K4915REDB 1	K4892LBS* 1	K4892REDB 10	K4892LBLK 1	K4899LBS* 1
		K4892BRC* 1			K4899BRC* 1
		K4892POC* 1			K4899POC* 1
		K4892SAG* 1			K4899SAG* 1
		K4892WHI 10			K4899WHI 10
		K4892LIVW 1			K4899LIVW 1
		K4892LBKB 1			K4899LBKB 1
		K4892PBR* 1			K4899PBR* 1
		K4892TIRB 1			K4899TIRB 1
		K4892DBZB 1			K4899DBZB 1
		K4892ABSB 1			K4899ABSB 1
		K4892TCOB 1			K4899TCOB 1
NOTE Push switches are not designed for fluorescent loads. BS EN 60669-1:1999	**NOTE** Push switches are not designed for fluorescent loads. BS EN 60669-1:1999	These switches do NOT have to be derated when used with fluorescent or inductive loads. BS EN 60669-1:1999	These switches do NOT have to be derated when used with fluorescent or inductive loads. Additional information on printed modules available in Grid Plus Section, pages 175. BS EN 60669-1:1999		These switches do NOT have to be derated when used with fluorescent or inductive loads. BS EN 60669-1:1999

* Available with the option of either White or Black inserts. Add Suffix 'W' or 'B' to part number when ordering, E.g. KxxxxBSSW.
Where there is no asterix, the final suffix W = White Insert, B = Black Insert, E.g. KxxxxLIVW Lustrous Ivory finish with white inserts

Edge™

Switch Modules

FINISHES	SP 2 WAY AND CENTRE OFF, RED ROCKER 20 AMP	INTERMEDIATE 20 AMP	INTERMEDIATE RED ROCKER 20 AMP	DP 1 WAY 20 AMP	DP 1 WAY WITH NEON 20 AMP
BRUSHED STAINLESS STEEL		K4893BSS* 1		K4896BSS* 1	
LACQUERED BRUSHED STEEL		K4893LBS* 1		K4896LBS* 1	
BRUSHED CHROME		K4893BRC* 1		K4896BRC* 1	
POLISHED CHROME		K4893POC* 1		K4896POC* 1	
SATIN GOLD		K4893SAG* 1		K4896SAG* 1	
MK WHITE (PLASTIC ROCKER)	K4899RED 10	K4893WHI 1	K4893RED 10	K4896WHI 1	K4896NWHI 1
LUSTROUS IVORY	K4899REDB 10	K4893LIVW 1	K4893REDB 10	K4896LIVW 1	K4896NBLK 1
LUSTROUS BLACK		K4893LBKB 1		K4896LBKB 1	
POLISHED BRASS		K4893PBR* 1		K4896PBR* 1	
TEXTURED IRON		K4893TIRB 1		K4896TIRB 1	
DESERT BRONZE		K4893DBZB 1		K4896DBZB 1	
ANTIQUE BRASS		K4893ABSB 1		K4896ABSB 1	
TEXTURED COPPER		K4893TCOB 1		K4896TCOB 1	
LEAD TIMES Please contact our Customer Services Department on 01268 563 404	BS EN 60669-1:1999	BS EN 60669-1:1999	BS EN 60669-1:1999	BS EN 60669-1:1999	BS EN 60669-1:1999

* Available with the option of either White or Black inserts. Add Suffix 'W' or 'B' to part number when ordering, E.g. KxxxxBSSW.
Where there is no asterix, the final suffix W = White Insert, B = Black Insert, E.g. KxxxxLIVW
Lustrous Ivory finish with white inserts

Switch Modules

DP
1 WAY
WITH WINDOW
20 AMP

DP
1 WAY
RED ROCKER
20 AMP

Printed Modules with and without Neon

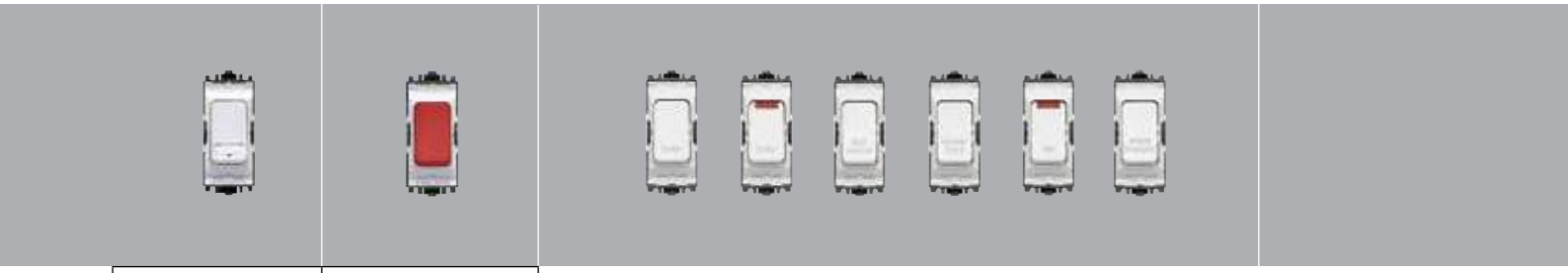

K4896WWHI	10	**K4896RED**	10
K4896WBLK	10	**K4896REDB**	10

BS EN 60669-1:1999

BS EN 60669-1:1999

K4896 PRINTED MODULE

FOR WHITE ROCKERS, USE THE SUFFIX 'WHI'. FOR BLACK ROCKERS, USE THE SUFFIX 'BLK'. FOR EXAMPLE: K4896BRWHI OR K4896BRBLK

BOILER K4896BR	WASTE DISPOSAL K4896WD	HOB K4896HB
DISHWASHER K4896DW	WASHING MACHINE K4896WM	IMMERSION HEATER K4896IH
COOKER HOOD K4896CH	TUMBLE DRYER K4896TD	PLINTH HEATER K4896PH
FAN K4896FN	WASHER DRYER K4896WDR	WORKTOP LIGHTING K4896WL
FRIDGE K4896Fg	MICROWAVE K4896MW	WINE COOLER K4896WC
FREEZER K4896FZ	HEATER K4896HR	WARMING DRAWER K4896WDA
FRIDGE FREEZER K4896FF	OVEN K4896OV	COFFEE MACHINE K4896CM

K4896N PRINTED MODULE WITH NEON

FOR WHITE ROCKERS, USE THE SUFFIX 'WHI'. FOR BLACK ROCKERS, USE THE SUFFIX 'BLK'. FOR EXAMPLE: K4896NBRWHI OR K4896NBRBLK

BOILER K4896NBR	WASTE DISPOSAL K4896NWD	HOB K4896NHB
DISHWASHER K4896NDW	WASHING MACHINE K4896NWM	IMMERSION HEATER K4896NIH
COOKER HOOD K4896NCH	TUMBLE DRYER K4896NTD	PLINTH HEATER K4896NPH
FAN K4896NFN	WASHER DRYER K4896NWDR	WORKTOP LIGHTING K4896NWL
FRIDGE K4896NFg	MICROWAVE K4896NMW	WINE COOLER K4896NWC
FREEZER K4896NFZ	HEATER K4896NHR	WARMING DRAWER K4896NWDA
FRIDGE FREEZER K4896NFF	OVEN K4896NOV	COFFEE MACHINE K4896NCM

NOTE
K4896NIH (Immersion Heater with Neon) is not available with black rockers.

Edge™

Key Switch Modules

	INTERMEDIATE KEY SWITCH 20 AMP	SP KEY SWITCH 2 WAY 20 AMP	SP KEY SWITCH 2 WAY EMERGENCY LIGHTING 20 AMP	DP KEY SWITCH 1 WAY 20 AMP	DP EMERGENCY LIGHTING 20 AMP	SP KEY SWITCH 2 WAY RETRACTIVE 20 AMP
FINISHES						
WHITE	**K4894WHI** 10	**K4898WHI** 10	**K4898ELWHI** 10	**K4917WHI** 10	**K4917ELWHI** 10	**K4918WHI** 10
BLACK	**K4894BLK** 1	**K4898BLK** 1	**K4898ELBLK** 1	**K4917BLK** 1		**K4918BLK** 10
	BS EN 60669-1:1999 Key (3405ZIC) is supplied.	BS EN 60669-1:1999 Key (3405ZIC) is supplied.	BS EN 60669-1:1999 Key (3405ZIC) is supplied.	BS EN 60669-1:1999 Key (3405ZIC) is supplied.	BS EN 60669-1:1999 Key (3405ZIC) is supplied.	BS EN 60669-1:1999 Key (3405ZIC) is supplied.

LEAD TIMES
Please contact our Customer Services Department on
01268 563 404

Indicator Modules

200-250V NEON	200-250V NEON	200-250V FLUORESCENT	21-36V FILAMENT	21-36V FILAMENT	21-36V FILAMENT
K4889RED 10 **K4889REDB** 1	**K4889AMB** 10	**K4889GRN** 10	**K4836RED** 10	**K4836AMB** 10	**K4836GRN** 10
BS 5733:2010	BS 5733:2010	BS 5733:2010	BS 5733:2010	BS 5733:2010	BS 5733:2010

Will Operate On Both A.C. And D.C

Not available in other finishes

Edge™

Dimmer Switch Modules

	1 GANG 40W/ VA-220W/180VA, 230VA.C, 50HZ 2 WAY 1 MODULE	1 GANG 60W/ VA-400W/320VA, 230VA.C, 50HZ 2 WAY 2 MODULE	1 GANG 40-220W/180VA/ 4-70W LED DIMMER 2 WAY 1 MODULE	0-10V/1-10V FLUORESCENT CONTROLLER 1 MODULE
FINISHES				
BRUSHED STAINLESS STEEL	K4501BSS*LV 1	K4500BSS*LV 1	K4511BSS*LV 1	K4499BSS* 1
LACQUERED BRUSHED STEEL	K4501LBS*LV 1	K4500LBS*LV 1	K4511LBS*LV 1	K4499LBS* 1
BRUSHED CHROME	K4501BRC*LV 1	K4500BRC*LV 1	K4511BRC*LV 1	K4499BRC* 1
POLISHED CHROME	K4501POC*LV 1	K4500POC*LV 1	K4511POC*LV 1	K4499POC* 1
SATIN GOLD	K4501SAG*LV 1	K4500SAG*LV 1	K4511SAG*LV 1	K4499SAG* 1
PORCELAIN WHITE	K4501WHIWLV 1	K4500WHIWLV 1	K4511WHIWLV 1	K4499WHI 1
LUSTROUS IVORY	K4501LIVWLV 1	K4500LIVWLV 1	K4511LIVWLV 1	K4499LIVW 1
LUSTROUS BLACK	K4501LBKBLV 1	K4500LBKBLV 1	K4511LBKBLV 1	K4499LBKB 1
POLISHED BRASS	K4501PBR*LV 1	K4500PBR*LV 1	K4511PBR*LV 1	K4499PBR* 1
TEXTURED IRON	K4501TIRBLV 1	K4500TIRBLV 1	K4511TIRBLV 1	K4499TIRB 1
DESERT BRONZE	K4501DBZBLV 1	K4500DBZBLV 1	K4511DBZBLV 1	K4499DBZB 1
ANTIQUE BRASS	K4501ABSBLV 1	K4500ABSBLV 1	K4511ABSBLV 1	K4499ABSB 1
TEXTURED COPPER	K4501TCOBLV 1	K4500TCOBLV 1	K4511TCOBLV 1	K4499TCOB 1

LEAD TIMES
Please contact our Customer Services Department on
01268 563 404

These dimmers incorporate the latest in micro-controller based circuitry to provide electronic soft-start and overload protection.
Suitable for use with good quality electronic or wire wound transformers. Can also be used with good quality mains voltage halogen lamps incorporating GU10 bases. Please check with lamp manufacturer to determine suitability.
K4500 is only suitable for use in 2, 4 and 8 module grids.
They are not suitable for fluorescent lamps.

NOTE
Refer to technical section for derating factors when more than one unit is used in any one box.
Conforms to the latest standard BS EN 60669-2-1.

MK Fluorescent Grid Dimmers are low voltage controllers for connection to 1-10V controllable ballasts.

* Available with the option of either White or Black inserts. Add Suffix 'W' or 'B' to part number when ordering, E.g. KxxxxBSSW. Where there is no asterix, the final suffix W = White Insert, B = Black Insert, E.g. KxxxxWHIW = Porcelain White finish with White inserts

When ordering K4500, K4501 & K4511, use the suffix 'LV' right at the end, eg. K4501BSSWLV

Accessory Modules

SINGLE TV CO-AXIAL OUTLET NON-ISOLATED	SINGLE TV CO-AXIAL OUTLET ISOLATED	BUZZER UNIT 200-250V	BUZZER UNIT 21-36V	CORD OUTLET 16 AMP
K4520WHI 10 **K4896WBLK** 10	**K4521WHI** 10 **K4521BLK** 10	**K4000WHI** 10	**K4001WHI** 10	**K4886WHI** 10 **K4886BLK** 10
For direct connection to TV or FM aerial co-axial downlead. NOT to be used in same enclosure as mains exceeding 50V. BS 3041:1977 IEC 169-2:1965 BS 5733:2010 where applicable.	For direct connection to TV or FM aerial co-axial downlead. NOT to be used in same enclosure as mains exceeding 50V. BS 3041:1977 IEC 169-2:1965 BS 5733:2010 where applicable.	200-250V BS 5733:2010	Sound output level Av 61 db @ 15 feet. BS 5733:2010	Complete with 3 pairs of terminals. The supply terminals are suitable for up to 2 x 2.5mm² or 1 x 4mm² solid conductors. The load terminals are suitable for one 1.5mm² flexible cord. A cord grip is also fitted. BS 5733:2010

Edge™

Accessory Modules

Euro Modular Frontplates

FINISHES	FUSE UNIT 13 AMP		FUSE UNIT WITH TAMPERPROOF SCREW 13 AMP		EURO 1 MODULE 25 X 50MM		EURO 2 MODULE 50 X 50MM		EURO 4 MODULE 100 X 50MM	
BRUSHED STAINLESS STEEL					K14181BSS	1	K14182BSS	1	K14184BSS	1
LACQUERED BRUSHED STEEL					K14181LBS	1	K14182LBS	1	K14184LBS	1
BRUSHED CHROME					K14181BRC	1	K14182BRC	1	K14184BRC	1
POLISHED CHROME					K14181POC	1	K14182POC	1	K14184POC	1
SATIN GOLD					K14181SAG	1	K14182SAG	1	K14184SAG	1
PORCELAIN WHITE	K4890WHI	10	K4890KOWHI	10	K14181WHI	1	K14182WHI	1	K14184WHI	1
LUSTROUS IVORY	K4890BLK	10	K4890KOBLK	10	K14181LIV	1	K14182LIV	1	K14184LIV	1
LUSTROUS BLACK					K14181LBK	1	K14182LBK	1	K14184LBK	1
POLISHED BRASS					K14181PBR	1	K14182PBR	1	K14184PBR	1
TEXTURED IRON					K14181TIR	1	K14182TIR	1	K14184TIR	1
DESERT BRONZE					K14181DBZ	1	K14182DBZ	1	K14184DBZ	1
ANTIQUE BRASS					K14181ABS	1	K14182ABS	1	K14184ABS	1
TEXTURED COPPER					K14181TCO	1	K14182TCO	1	K14184TCO	1

LEAD TIMES
Please contact our Customer Services Department on
01268 563 404

Fuse carrier comes with 13A cartridge fuse link to BS 1362. BS 5733:2010

Key 3405ZIC supplied
Fuse carrier comes with 13A cartridge fuse link to BS 1362. BS 5733:2010

MOUNTING BOXES
Suitable for flush boxes to BS 4662:2006 and surface boxes to BS 5733:2010
Refer to appropriate module for minimum box depth.
FIXING CENTRES
60.3mm
BS 5733:2010 where applicable.
Note: No grid required, modules just clip into place.

MOUNTING BOXES
Suitable for flush boxes to BS 4662:2006 and surface boxes to BS 5733:2010
Refer to appropriate module for minimum box depth.
FIXING CENTRES
60.3mm
BS 5733:2010 where applicable.
Note: No grid required, modules just clip into place.

MOUNTING BOXES
Suitable for flush boxes to BS 4662:2006 and surface boxes to BS 5733:2010
Refer to appropriate module for minimum box depth.
FIXING CENTRES
120.6mm
BS 5733:2010 where applicable.
Note: No grid required, modules just clip into place.

Euro Power Modules

UK 250V 2 MODULE 50 X 50MM 13 AMP	GERMAN 2P+E 250V SHUTTERED 2 MODULE (NON UK) 16 AMP	AMERICAN 127V SHUTTERED 2 MODULE 50 X 50MM (NON UK) 15 AMP	UK 250V SHUTTERED 2 MODULE 50 X 50MM 5 AMP	FRENCH/BELGIAN 2P+E 250V SHUTTERED 2 MODULE 50 X 50MM (NON UK) 16 AMP
K5830WHI 10 **K5830BLK** 10	**K5831WHI** 10 **K5831BLK** 10	**K5832WHI** 10 **K5832BLK** 10	**K5833WHI** 10 **K5833BLK** 10	**K5834WHI** 10 **K5834BLK** 10
MOUNTING BOX 35mm minimum 46mm (for extra wiring space). **DIMENSIONS** 50 x 50mm BS 1363 Part 2:1995	**MOUNTING BOX** 46mm **DIMENSIONS** 50 x 50mm IEC 60884-1:2006	**MOUNTING BOX** 35mm 46mm (for extra wiring space) **DIMENSIONS** 50 x 50mm SASO 2204:2003	**MOUNTING BOX** 35mm minimum 46mm (for extra wiring space). **DIMENSIONS** 50 x 50mm BS 546:1950	**MOUNTING BOX** 46mm **DIMENSIONS** 50 x 50mm NF C61-314

**Mains operated products and extra low voltage modules must not be installed within the same frontplate.
Refer to BS 7671:2008 for details.**

Edge™

	Euro Power Modules	Euro Datacom Modules			
	USB CHARGING 2 MODULE 50 X 50MM	RJ11/12 1 MODULE 25 X 50MM	RJ45 CAT 6 1 MODULE 25 X 50MM	RJ45 CAT 6 SCREENED 1 MODULE 25 X 50MM	RJ45 CAT 6 ANGLED 1 MODULE 25 X 50MM
FINISHES					
WHITE	**K5837WHI** 1	**K5887WHI** 5	**K5846WHI** 5	**K5846SWHI** 5	**K5864WHI** 5
BLACK	**K5837BLK** 1	**K5887BLK** 5	**K5846BLK** 5	**K5846SBLK** 5	

LEAD TIMES
Please contact our Customer Services Department on
01268 563 404

USB charging sockets, each capable of supporting 2A charge (total of 2A)

K5837 MOUNTING BOX
Minimum Box depth 35mm
46mm for extra wiring space
IEC 60950-1
IEC 61000-6-1/3

Suitable for both RJ11 and RJ12 jacks
RJ11; 4 wire
RJ12; 6 wire
MOUNTING BOXES
Minimum Box depth 35mm
FCC68
EN 41003

Cat 6 performance.
Suitable for both 568A and 568B wiring schemes.

MOUNTING BOXES
Minimum Box Depth 35mm
ISO/IEC 11801
EN 50173
TIA 568
EN 41003

Cat 6 performance.
Suitable for both 568A and 568B wiring schemes.

MOUNTING BOXES
Minimum Box Depth 35mm
ISO/IEC 11801
EN 50173
TIA 568
EN 41003

Cat 6 performance.
Suitable for both 568A and 568B wiring schemes.

MOUNTING BOXES
Minimum Box Depth 35mm
ISO/IEC 11801
EN 50173
TIA 568
EN 41003

**Mains operated products and extra low voltage modules must not be installed within the same frontplate.
Refer to BS 7671:2008 for details.**

RJ45 CAT 5e ANGLED 1 MODULE 25 X 50MM	RJ45 CAT 5e 1 MODULE 25 X 50MM	TELEPHONE MASTER 1 MODULE 25 X 50MM	TELEPHONE SECONDARY 1 MODULE 25 X 50MM	BNC 50Ω 1 MODULE 25 X 50MM
K5844WHI 5	**K5845WHI** 5	**K5820WHI** 5	**K5821WHI** 5	**K5801WHI** 5
	K5845BLK 5	**K5820BLK** 5	**K5821BLK** 5	
Enhanced Cat 5 performance. Suitable for both 568A and 568B wiring schemes. **MOUNTING BOXES** Minimum box depth 35mm standard ISO/IEC 11801 EN 50173 TIA 568 EN 41003	Enhanced Cat 5 performance. Suitable for both 568A and 568B wiring schemes. **MOUNTING BOXES** Minimum box depth 35mm standard ISO/IEC 11801 EN 50173 TIA 568 EN 41003	**MOUNTING BOXES** Minimum depth 35mm BS 6312-2	**MOUNTING BOXES** Minimum depth 35mm BS 6312-2	50 Ohm crimp connector suitable for use with RG58, URM43, URM76 and Beldon 9907 type co-axial cables. **MOUNTING BOXES** Minimum box depth 35mm

**Mains operated products and extra low voltage modules must not be installed within the same frontplate.
Refer to BS 7671:2008 for details.**

Edge™

Euro Multimedia Modules

	SINGLE OUTLET (IEC MALE) 1 MODULE 25 X 50MM	SINGLE OUTLET (IEC FEMALE) 1 MODULE 25 X 50MM	SINGLE F-TYPE SATELLITE SOCKET 1 MODULE 25 X 50MM	TWIN OUTLET TV/FM DIPLEXER 2 MODULE 50 X 50MM (IRELAND ONLY)
FINISHES				
WHITE	**K5850WHI** 5	**K5851WHI** 5	**K5855WHI** 5	**K5852WHI** 5
BLACK	**K5850BLK** 5	**K5851BLK** 5	**K5855BLK** 5	**K5852BLK** 5

LEAD TIMES
Please contact our Customer Services Department on
01268 563 404

Fully screened non isolated TV outlets containing a combination of single, TV/FM Diplexer, TV/FM/SAT Triplexer and BT secondary telephone outlets for use within digital TV systems and interactive TV services.
Single outlets for connection to a single TV, FM or Satellite co-axial aerial lead.

MOUNTING BOXES
Minimum Box Depth 47mm
BS 3041:1997, IEC 169-2:1965, BS EN 50083 & BS 5733:2010 where applicable.

TV/FM Diplexer units for connection to a single co-axial aerial lead with combined TV and FM signals.

PERFORMANCE

Single	TV:	DC - 950MHz
	Sat:	DC - 1.75GHz
Diplexer	TV:	5-65MHz 470-862MHz
	FM:	87.5-108 MHz

TV/FM/DAB FOR DIGITAL RADIO PERFORMANCE

Diplexer	TV:	5-65MHz 470-862MHz
	FM/DAB:	87.5-230MHz

These products are fully compatible with Labgear TV distribution systems and are approved for use in "Sky Homes" and "Homes On" specifications.

**Mains operated products and extra low voltage modules must not be installed within the same frontplate.
Refer to BS 7671:2008 for details.**

Euro Multimedia Modules

TWIN OUTLET TV-FM/DAB DIPLEXER 2 MODULE 50 X 50MM	TRIPLE OUTLET TV/FM/SATELLITE TRIPLEXER 2 MODULE 50 X 50MM (IRELAND ONLY)	TRIPLE OUTLET TV-FM/DAB-SAT TRIPLEXER 2 MODULE 50 X 50MM	QUAD OUTLET TV-FM/DAB-2XSAT 2 MODULE 50 X 50MM	FEMALE HDMI OUTLET 2 MODULE 50 X 50MM
K5852DABWHI 5	**K5853WHI** 5	**K5853DABWHI** 5	**K5854DABWHI** 5	**K5807WHI** 5
K5852DABBLK 5	**K5853BLK** 5	**K5853DABBLK** 5	**K5854DABBLK** 5	**K5807BLK** 5

TV/FM Diplexer units for connection to a single co-axial aerial lead with combined TV and FM signals.

PERFORMANCE

Single	TV:	DC - 950MHz
	Sat:	DC - 1.75GHz
Diplexer	TV:	5-65MHz 470-862MHz
	FM:	87.5-108 MHz

TV/FM/DAB FOR DIGITAL RADIO PERFORMANCE

Diplexer	TV:	5-65MHz 470-862MHz
	FM/DAB:	87.5-230MHz

TV/FM diplexer units for connection to a single co-axial aerial lead with combined TV and FM signals.
TV/FM/SAT triplexer units for connection to a single co-axial aerial lead with combined TV, FM and Satellite signals

PERFORMANCE

SINGLE OUTLETS

TV/FM IEC MALE OR FEMALE
DC-950MHz

SAT F-TYPE
DC-1.75GHz

TV/FM/SAT PRODUCTS

OUTLET	DIPLEXER	OUTLET	TRIPLEXER
TV	5-65MHz 470-862MHz	TV	5-65MHZ 470-862MHz
FM/DAB	87.5-108MHz	FM	87.5-108MHz
SAT	N/A	SAT1	950-2300MHz

TV/FM/DAB/SAT PRODUCTS FOR DIGITAL RADIO

OUTLET	DIPLEXER	OUTLET	TRIPLEXER
TV	5-65MHz 470-862MHz	TV	5-65MHz 470-862MHz
FM/DAB	87.5-230MHz	FM	87.5-230MHz
SAT OR SAT1	N/A	SAT1	950-2300MHz
SAT2		SAT2	5-2300MHz

K5807 Female HDMI Outlet is HDMI 1.1, 1.2. 1.3 and 1.4b compatible, HDCP compliant.

DATA RATE
Up to 2.25 Gbps

SCAN
Up to 1080p/1920x1200

INPUT CONNECTOR
1 x HDMI Female (Type A)

OUTPUT CONNECTOR
1 x HDMI Female (Type A)
Supports high resolution input:
PC: VGA, SVGA,
SXVGA (1280x1024) and UXGA (1600x1200, 1920x1200)
HDTV: 480p, 720p, 1080i and 1080p
HDMI input cable should be no larger than 20m

These products are fully compatible with Labgear TV distribution systems and are approved for use in "Sky Homes" and "Homes On" specifications.

**Mains operated products and extra low voltage modules must not be installed within the same frontplate.
Refer to BS 7671:2008 for details.**

Edge™

Euro Blank Modules

	AUDIO BINDING POST FOR SINGLE LOUD SPEAKER 1 MODULE 25 X 50MM	RCA TO SCREW TERMINATION SET 1 RED AND 1 BLACK 1 MODULE 25 X 50MM	2 MODULE 50 X 50MM	1 MODULE 25 X 50MM	1/2 MODULE 12.5 X 50MM
FINISHES					
BRUSHED STAINLESS STEEL					
LACQUERED BRUSHED STEEL					
BRUSHED CHROME					
POLISHED CHROME					
SATIN GOLD					
PORCELAIN WHITE	K5805WHI 5	K5806WHI 5	K180WHI 10	K188WHI 10	K186WHI 10
LUSTROUS IVORY	K5805BLK 5	K5806BLK 5	K180BLK 10	K188BLK 10	K186BLK 10
LUSTROUS BLACK					
POLISHED BRASS					
TEXTURED IRON					
DESERT BRONZE					
ANTIQUE BRASS					
TEXTURED COPPER					
	DIMENSIONS 50 x 25 x 28mm	DIMENSIONS 50 x 25 x 28mm	BS 5733:2010 where applicable	BS 5733:2010 where applicable	BS 5733:2010 where applicable

LEAD TIMES
Please contact our Customer Services Department on
01268 563 404

LJU6C Datacom Frontplate

1 GANG
2 MODULE
22 X 37MM

LJU6C Datacom Modules

RJ11/12
1 MODULE

RJ45 CAT 6
1 MODULE

RJ45
CAT 6
SCREENED
1 MODULE

RJ45
CAT 5e
1 MODULE

K14172BSS*	1	K5787WHI	5	K5746WHI	5	K5746SWHI	5
K14172LBS*	1			K5746BLK	5	K5746SBLK	5
K14172BRC*	1						
K14172POC*	1						
K14172SAG*	1						
K14172WHIW	1						
K14172LIVW	1						
K14172LBK	1						
K14172PBRB	1						
K14172TIRB	1						
K14172DBZB	1						
K14172ABSB	1						
K14172TCOB	1						

MOUNTING BOXES
Suitable for flush boxes to BS 4662:1970 and surface boxes to BS 5733:2010
Refer to appropriate module for minimum box depth.
FIXING CENTRES
1 gang: 60.3mm
2 gang: 120.6mm
BS 5733:2010 where applicable
NOTE
No grid required, modules just clip into place

Suitable for both RJ11 and RJ12 jacks.
RJ11: 4 wire
RJ12: 6 wire
MOUNTING BOXES
Minimum box depth 35mm
FCC68
EN41003

Cat 6 performance.
Suitable for both 568A and 568B wiring schemes.
MOUNTING BOXES
Minimum Box Depth 35mm
ISO/IEC 11801
EN 50173
TIA 568
EN 41003

Cat 6 performance.
Suitable for both 568A and 568B wiring schemes.
MOUNTING BOXES
Minimum Box Depth 35mm
ISO/IEC 11801
EN 50173
TIA 568
EN 41003

Enhanced Cat 5 performance.
Suitable for both 568A and 568B wiring schemes.
MOUNTING BOXES
Minimum Box Depth 25mm
ISO/IEC 11801
EN 50173
TIA 568
EN 41003

* Available with White or Black inserts.

Edge™

LJU6C Datacom Blanks

LJU6C
1 MODULE

Blank Plates

1 GANG

2 GANG

FINISHES	LJU6C 1 MODULE		1 GANG		2 GANG	
BRUSHED STAINLESS STEEL	K170WHI	10	K14330BSS	1	K14329BSS	1
LACQUERED BRUSHED STEEL			K14330LBS	1	K14329LBS	1
BRUSHED CHROME			K14330BRC	1	K14329BRC	1
POLISHED CHROME			K14330POC	1	K14329POC	1
SATIN GOLD			K14330SAG	1	K14329SAG	1
PORCELAIN WHITE			K14330WHI	1	K14329WHI	1
LUSTROUS IVORY	K170BLK	10	K14330LIV	1	K14329LIV	1
LUSTROUS BLACK			K14330LBK	1	K14329LBK	1
POLISHED BRASS			K14330PBR	1	K14329PBR	1
TEXTURED IRON			K14330TIR	1	K14329TIR	1
DESERT BRONZE			K14330DBZ	1	K14329DBZ	1
ANTIQUE BRASS			K14330ABS	1	K14329ABS	1
TEXTURED COPPER			K14330TCO	1	K14329TCO	1

LEAD TIMES
Please contact our Customer Services Department on
01268 563 404

BS 5733:2010 where appropriate

MOUNTING BOXES
FLUSH
866ZIC
DIMENSIONS:
86 x 86mm
FIXING CENTRES
1 gang: 60.3mm
BS 5733:2010

MOUNTING BOXES
FLUSH
866ZIC
DIMENSIONS
86 x 146mm
FIXING CENTRES
2 gang: 120.6mm
BS 5733:2010

ALBANY PLUS™

RANGE INTRODUCTION

Available in Brushed Stainless Steel, Brushed Chrome, Satin Gold and Polished Chrome finishes, Albany Plus™ brings stylish yet subtle good looks to both contemporary and classical interiors.

Being manufactured from the finest materials, Albany Plus™ wiring devices maintain their high quality appearance for years to come.

Echo™ is an innovative range of entirely wireless, batteryless and self powered switches, only available from MK Electric and in finishes to complement the Albany Plus™ range. Please see page 21 for details.

HOW TO SPECIFY

A metal, flush mounting range of wiring devices. Frontplates with a maximum 9mm profile and subtle 7mm radius rounded corners. Cable connections must be upward facing with easy to identify white markings on a dark background, grouped in a straight line with captive terminal screws for ease of installation. All sockets to have a 3 pin operated shutter safety mechanism and double pole switching, with the contacts designed such that the neutral makes before and breaks after the live pole for improved safety. Switches to be large and concave with a minimum 3mm contact gap with a positive 'click' to denote successful operation.

FEATURES & BENEFITS

AVAILABLE IN BRUSHED STAINLESS STEEL, BRUSHED CHROME, SATIN GOLD AND POLISHED CHROME

Providing a range of products that complement the décor and requirements of any interior.

ALBANY PLUS™ BRUSHED CHROME AND SATIN GOLD ARE PRE-TREATED WITH A HEAT-CURED POWDER LACQUER FINISH

Brushed Chrome and Satin Gold products are coated with a special heat-cured powder lacquer finish ensuring that the range is durable, tarnish resistant and maintains its stylish and understated appearance for many years.

TOTAL SAFETY

MK sockets have a 3-pin operated "child resistant shutter system", which is designed to inhibit access to the electricity supply unless all 3 pins of a standard British 13A plug are in position.

DESIGN SERVICE

Perfect for when only a customised solution will do.

Albany Plus™

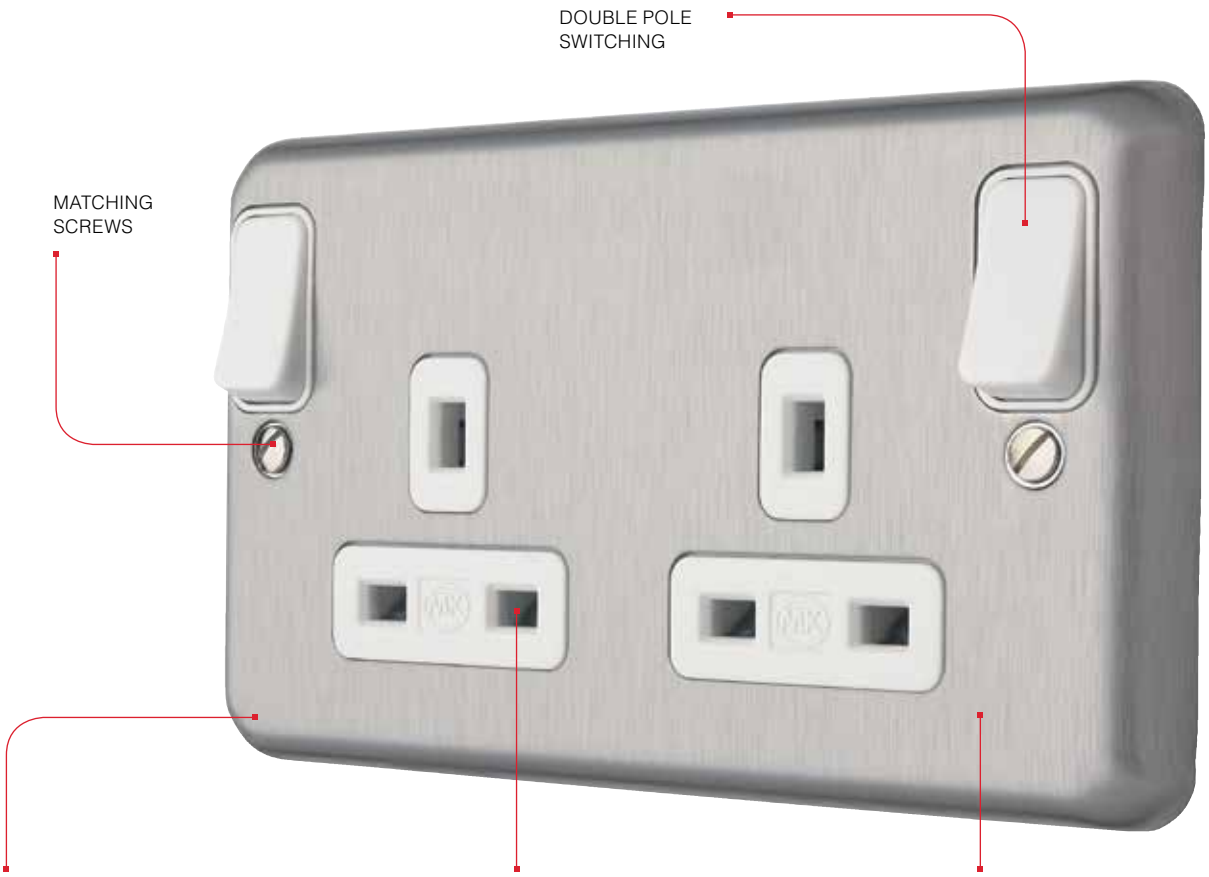

STYLISH CURVED DESIGN
Blends unobtrusively into the environment

3-PIN "CHILD RESISTANT SHUTTER SYSTEM"
Designed to inhibit access to the electricity supply, unless all 3 pins of a standard British 13A plug are in position

PRE-TREATED HEAT-CURED POWDER LACQUER FINISH (BRC AND SAG)
Ensures that the range is durable and tarnish resistant

Terminal screws are backed out and captive. Terminals are upwards facing to make installation easier.

Funnel entrance to terminals.

Clear terminal markings for easy identification.

Polished Chrome finish complements modern interior design.

Brushed Chrome finish has subtle good looks to suit classic interiors.

Albany Plus™

Switchsocket Outlets

	1 GANG DP DUAL EARTH TERMINALS 13 AMP	2 GANG DP 13 AMP	2 GANG DP WITH RED ROCKERS 13 AMP	1 GANG DP DUAL EARTH TERMINALS WITH NEON 13 AMP
FINISHES				
BRUSHED STAINLESS STEEL	K2958BSS 10	K2948BSS 5	K2948D6BSS 5	K2458BSS 5
BRUSHED CHROME	K2958BRC 1	K2948BRC 1	K2948D6BRC 1	K2458BRC 1
SATIN GOLD	K2958SAG 1	K2948SAG 1		K2458SAG 1
POLISHED CHROME	K2958PCR 1	K2948PCR 1		K2458PCR 1

LEAD TIMES
Please contact our Customer Services Department on
01268 563 404

MOUNTING BOXES
FLUSH 25MM
1 gang: 861ZIC
FLUSH 35MM
(for extra wiring space)
1 gang: 866ZIC
SURFACE WITH KNOCKOUTS
1 gang: K899ALM
SURFACE WITHOUT KNOCKOUTS
1 gang: K829ALM
DIMENSIONS
86 x 86mm
FIXING CENTRES
60.3mm
BS 1363-2:1995
DOUBLE POLE SWITCHING
All switchsockets have double pole switching (neutral makes first, breaks last).
HIGH INTEGRITY EARTHING
Fitted with two earth terminals to provide a double earth facility for use when installations require a high integrity protective connection as specified within BS 7671:2008

MOUNTING BOXES
FLUSH 25MM
2 gang: 862ZIC
FLUSH 35MM
(for extra wiring space)
2 gang: 886ZIC
SURFACE WITH KNOCKOUTS
2 gang: K897ALM
SURFACE WITHOUT KNOCKOUTS
2 gang: K830ALM
DIMENSIONS
86 x 146mm
FIXING CENTRES
120.6mm
BS 1363-2:1995
DOUBLE POLE SWITCHING
All switchsockets have double pole switching (neutral makes first, breaks last)

MOUNTING BOXES
FLUSH 25MM
2 gang: 862ZIC
FLUSH 35MM
(for extra wiring space)
2 gang: 886ZIC
SURFACE WITH KNOCKOUTS
2 gang: K897ALM
SURFACE WITHOUT KNOCKOUTS
2 gang: K830ALM
DIMENSIONS
86 x 146mm
FIXING CENTRES
120.6mm
BS 1363-2:1995
DOUBLE POLE SWITCHING
All switchsockets have double pole switching (neutral makes first, breaks last)

MOUNTING BOXES
FLUSH 25MM
1 gang: 861ZIC
FLUSH 35MM
(for extra wiring space)
1 gang: 866ZIC
SURFACE WITH KNOCKOUTS
1 gang: K899ALM
SURFACE WITHOUT KNOCKOUTS
1 gang: K829ALM
DIMENSIONS
86 x 86mm
FIXING CENTRES
60.3mm
BS 1363-2:1995
DOUBLE POLE SWITCHING
All switchsockets have double pole switching (neutral makes first, breaks last).
HIGH INTEGRITY EARTHING
Fitted with two earth terminals to provide a double earth facility for use when installations require a high integrity protective connection as specified within BS 7671:2008

Albany Plus™

Switchsocket Outlets

	2 GANG DP WITH NEONS 13 AMP	2 GANG DP WITH 2 X USB CHARGING PORTS DUAL EARTH 13 AMP	2 GANG DP WITH OUTBOARD ROCKERS AND DUAL EARTH TERMINALS 13 AMP	2 GANG DP WITH OUTBOARD RED ROCKERS AND DUAL EARTH TERMINALS 13 AMP
FINISHES				
BRUSHED STAINLESS STEEL	**K2448BSS** 5	**K2943BSS** 1	**K2947BSS** 5	**K2947D6BSS** 5
BRUSHED CHROME	**K2448BRC** 1	**K2943BRC** 1	**K2947BRC** 1	**K2947D6BRC** 1
SATIN GOLD	**K2448SAG** 1	**K2943SAG** 1	**K2947SAG** 1	
POLISHED CHROME	**K2448PCR** 1	**K2943PCR** 1	**K2947PCR** 1	

LEAD TIMES
Please contact our Customer Services Department on
01268 563 404

MOUNTING BOXES
FLUSH 25MM
2 gang: 862ZIC
FLUSH 35MM
(for extra wiring space)
2 gang: 886ZIC
SURFACE WITH KNOCKOUTS
2 gang: K897ALM
SURFACE WITHOUT KNOCKOUTS
2 gang: K830ALM
DIMENSIONS
86 x 146mm
FIXING CENTRES
120.6mm
BS 1363-2:1995
DOUBLE POLE SWITCHING
All switchsockets have double pole switching (neutral makes first, breaks last)

USB charging sockets, each capable of supporting 2A charge (total of 2A)

MOUNTING BOXES
FLUSH 35MM
2 gang: 886ZIC
FLUSH 46MM
(for extra wiring space)
2 gang: 877ZIC
SURFACE WITH KNOCKOUTS
2 gang: K897ALM
SURFACE WITHOUT KNOCKOUTS
2 gang: K830ALM
DIMENSIONS
86 x 146mm
FIXING CENTRES
120.6mm
BS5733: 2010
DOUBLE POLE SWITCHING
All switchsockets have double pole switching (neutral makes first, breaks last)
HIGH INTEGRITY EARTHING
Fitted with two earth terminals to provide a double earth facility for use when installations require a high integrity protective connection as specified within BS 7671:2008

MOUNTING BOXES
FLUSH 25MM
2 gang: 862ZIC
FLUSH 35MM
(for extra wiring space)
2 gang: 886ZIC
SURFACE WITH KNOCKOUTS
2 gang: K897ALM
SURFACE WITHOUT KNOCKOUTS
2 gang: K830ALM
DIMENSIONS
86 x 146mm
FIXING CENTRES
120.6mm
BS 1363-2:1995
DOUBLE POLE SWITCHING
All switchsockets have double pole switching (neutral makes first, breaks last)
HIGH INTEGRITY EARTHING
Fitted with two earth terminals to provide a double earth facility for use when installations require a high integrity protective connection as specified within BS 7671:2008

MOUNTING BOXES
FLUSH 25MM
2 gang: 862ZIC
FLUSH 35MM
(for extra wiring space)
2 gang: 886ZIC
SURFACE WITH KNOCKOUTS
2 gang: K897ALM
SURFACE WITHOUT KNOCKOUTS
2 gang: K830ALM
DIMENSIONS
86 x 146mm
FIXING CENTRES
120.6mm
BS 1363-2:1995
DOUBLE POLE SWITCHING
All switchsockets have double pole switching (neutral makes first, breaks last)
HIGH INTEGRITY EARTHING
Fitted with two earth terminals to provide a double earth facility for use when installations require a high integrity protective connection as specified within BS 7671:2008

Pattress available for use where existing back box is too shallow, see page 34

Albany Plus™

2 GANG DP WITH OUTBOARD ROCKERS AND 'CLEAN EARTH' FACILITY 13 AMP	1 GANG DP NON STANDARD WITH CLEAN EARTH FACILITY 13 AMP	2 GANG DP NON STANDARD WITH CLEAN EARTH FACILITY 13 AMP	2 GANG DP DUAL EARTH FILTERED SPIKE AND RFI 13 AMP	REPLACEMENT FILTER CASSETTE	1 GANG DP ROUND PIN 5 AMP
K2947CEBSS 5	K1258BSS 5	K1259BSS 5	K2826BSS 1	K1800WHI 5	K2881BSS 5
K2947CEBRC 1	K1258BRC 1	K1259BRC 1	K2826BRC 1		K2881BRC 1
					K2881SAG 1
					K2881PCR 1
MOUNTING BOXES **FLUSH 25MM** 2 gang: 862ZIC **FLUSH 35MM** (for extra wiring space) 2 gang: 886ZIC **SURFACE WITH KNOCKOUTS** 2 gang: K897ALM **SURFACE WITHOUT KNOCKOUTS** 2 gang: K830ALM This product is provided with facilities for 'clean earth' connection. **DIMENSIONS** 86 x 146mm **FIXING CENTRES** 120.6mm BS 1363-2:1995	**MOUNTING BOXES** **FLUSH 25MM** 861ZIC **FLUSH 35MM** (for extra wiring space) 866ZIC **SURFACE WITH KNOCKOUTS** K899ALM **SURFACE WITHOUT KNOCKOUTS** K829ALM These products are provided with facilities for 'clean earth' connection and are suitable for non standard plugs with 'T' shaped earth pin. See page 240. **DIMENSIONS** 86 x 86mm **FIXING CENTRES** 60.3mm BS 1363-2:1995 where relevant	**MOUNTING BOXES** **FLUSH 25MM** 2 gang: 862ZIC **FLUSH 35MM** (for extra wiring space) 2 gang: 886ZIC **SURFACE WITH KNOCKOUTS** 2 gang: K897ALM **SURFACE WITHOUT KNOCKOUTS** 2 gang: K830ALM This product provides facilities for 'clean earth' connection and are suitable for non standard plugs with 'T' shaped earth pin. See page 240. **DIMENSIONS** 86 x 146mm **FIXING CENTRES** 120.6mm BS 1363-2:1995 where relevant	**MOUNTING BOX** 886ZIC Provides two way filtering to reduce voltage spikes and radio frequency interference. Protected by thermal cut out. Fitted with two earth terminals to provide a double earth facility when installations require a high integrity protective connection as specified within BS 7671:2008. Maximum total load 13A **DIMENSIONS** 86 x 146 x 39mm **FIXING CENTRES** 120.6mm BS 5733:2010		**MOUNTING BOXES** **FLUSH 25MM** 861ZIC **FLUSH 35MM** (for extra wiring space) 866ZIC **SURFACE WITH KNOCKOUTS** K899ALM **SURFACE WITHOUT KNOCKOUTS** K829ALM **DIMENSIONS** 86 x 86mm **FIXING CENTRES** 60.3mm BS 546:1950

Albany Plus™

	Switchsocket Outlets	Switchsocket Outlets RCD Protected		Socket Outlets	
	1 GANG DP ROUND PIN 15 AMP	1 GANG DP 30MA RATED TRIPPING CURRENT ACTIVE CONTROL CIRCUIT 13 AMP	1 GANG DP 30MA RATED TRIPPING CURRENT PASSIVE CONTROL CIRCUIT 13 AMP	1 GANG 13 AMP	2 GANG WITH DUAL EARTH TERMINALS 13 AMP
FINISHES					
BRUSHED STAINLESS STEEL	K2883BSS 5	K6301BSS 1	K6304BSS 1	K732BSS 5	K733BSS 5
BRUSHED CHROME	K2883BRC 1	K6301BRC 1	K6304BRC 1	K732BRC 1	K733BRC 1
SATIN GOLD	K2883SAG 1	K6301SAG 1			
POLISHED CHROME	K2883PCR 5	K6301PCR 1			

LEAD TIMES
Please contact our Customer Services Department on
01268 563 404

MOUNTING BOXES
FLUSH 25MM
861ZIC
FLUSH 35MM
(for extra wiring space)
866ZIC
SURFACE WITH KNOCKOUTS
K899ALM
SURFACE WITHOUT KNOCKOUTS
K829ALM
DIMENSIONS
86 x 86mm
FIXING CENTRES
60.3mm
BS 546:1950

MOUNTING BOXES
FLUSH
886ZIC
Boxes must have a minimum depth of 30mm
SURFACE WITH KNOCKOUTS
K897ALM
SURFACE WITHOUT KNOCKOUTS
K830ALM
It is important to ensure that the correct control circuit, active or passive, is selected for each application.
Only suitable for supply voltage of 240V a.c.
DIMENSIONS
86 x 146mm
FIXING CENTRES
120.6mm
BS 7288:1990

MOUNTING BOXES
FLUSH 35MM
2 gang: 886ZIC
FLUSH 46MM
(for extra wiring space)
2 gang: 877ZIC
SURFACE WITH KNOCKOUTS
2 gang: K897ALM
SURFACE WITHOUT KNOCKOUTS
2 gang: K830ALM
DIMENSIONS
86 x 146mm
FIXING CENTRES
120.6mm

It is important to ensure that the correct control circuit, active or passive, is selected for each application.
Only suitable for supply voltage of 240V a.c.
BS 7288:1990

MOUNTING BOXES
FLUSH 25MM
1 gang: 861ZIC
FLUSH 35MM
(for extra wiring space)
1 gang: 866ZIC
SURFACE WITH KNOCKOUTS
1 gang: K899ALM
SURFACE WITHOUT KNOCKOUTS
K829ALM
DIMENSIONS
86 x 86mm
FIXING CENTRES
60.3mm
BS 1363-2:1995

MOUNTING BOXES
FLUSH 25MM
2 gang: 862ZIC
FLUSH 35MM
(for extra wiring space)
2 gang: 886ZIC
SURFACE WITH KNOCKOUTS
2 gang: K897ALM
SURFACE WITHOUT KNOCKOUTS
2 gang: K830ALM
DIMENSIONS
86 x 146mm
FIXING CENTRES
120.6mm
BS 1363-2:1995
HIGH INTEGRITY EARTHING
Fitted with two earth terminals to provide a double earth facility for use when installations require a high integrity protective connection as specified within BS 7671:2008

Albany Plus™

Socket Outlets - Medical Locations

Key Operated Socket Outlet and Switch

1 GANG DP SWITCHED 13 AMP	1 GANG UNSWITCHED 13 AMP	2 GANG DP CLEAN EARTH WITH OUTBOARD ROCKERS 13 AMP	2 GANG CLEAN EARTH UNSWITCHED 13 AMP	1 GANG DP DUAL EARTH 13 AMP	1 GANG DP 20 AMP
K2958BLU 1	**K732BLU** 1	**K2947CEBLU** 5	**K733CEBLU** 1	**K2949BSS** 1 **K2949BRC** 1	**K2158BSS** 1 **K2158BRC** 1

MOUNTING BOXES
FLUSH 25MM
1 gang: 861ZIC
FLUSH 35MM
(for extra wiring space)
1 gang: 866ZIC
SURFACE WITH KNOCKOUTS
1 gang: K899ALM
SURFACE WITHOUT KNOCKOUTS
1 gang: K829ALM
DIMENSIONS
86 x 86mm
FIXING CENTRES
60.3mm
BS 1363-2:1995

Product helps support compliance to BS7671 – 710.553.1

K2947CEBLU, K733CEBLU
These product are provided with facilities for "clean earth" connection.

MOUNTING BOXES
FLUSH 25MM
2 gang: 862ZIC
FLUSH 35MM
(for extra wiring space)
2 gang: 886ZIC
SURFACE WITH KNOCKOUTS
2 gang: K897ALM
SURFACE WITHOUT KNOCKOUTS
2 gang: K830ALM
DIMENSIONS
86 x 146mm
FIXING CENTRES
120.6mm
BS 1363-2:1995

Product helps support compliance to BS7671 – 710.553.1

MOUNTING BOXES
FLUSH 35MM
2 gang: 886ZIC
SURFACE WITH KNOCKOUTS
2 gang: K897ALM
SURFACE WITHOUT KNOCKOUTS
2 gang: K830ALM
DIMENSIONS
86 x 146mm
BS 1363 Pt2:1995
HIGH INTEGRITY EARTHING
Fitted with two earth terminals to provide a double earth facility for use when installations require a high integrity protective connection as specified within BS 7671:2008

MOUNTING BOXES
FLUSH 35MM
1 gang: 866ZIC
SURFACE WITH KNOCKOUTS
1 gang: K899ALM
SURFACE WITHOUT KNOCKOUTS
1 gang: K829ALM
DIMENSIONS
86 x 86mm
BS EN 60669-1:1999

Albany Plus™

Floor Mounted Socket Outlets

Connection Units Switched

FINISHES	1 GANG SP SWITCHSOCKET SPRING LOADED HINGED COVER PLATE 13 AMP		1 GANG UNSWITCHED SOCKET SPRING LOADED HINGED COVER PLATE 13 AMP		2 GANG UNSWITCHED SOCKET SPRING LOADED HINGED COVER PLATE 13 AMP		DP WITH FLEX OUTLET 13 AMP		DP 13 AMP	
BRUSHED STAINLESS STEEL	740BSS	10	741BSS	5	742BSS	1	K931BSS	5	K941BSS	1
BRUSHED CHROME	740BRC	1	741BRC	1	742BRC	1	K931BRC	1	K941BRC	1
SATIN GOLD	740SAG	5	741SAG	1	742SAG	1	K931SAG	1	K941SAG	1
POLISHED CHROME							K931PCR	1	K941PCR	1

LEAD TIMES
Please contact our Customer Services Department on
01268 563 404

MOUNTING BOXES
FLUSH
1 gang: 866ZIC
Boxes must have a minimum depth of 35mm
Rotary operated shutter.
DIMENSIONS
102 x 86mm
FIXING CENTRES
60.3mm
BS 1363-2:1995

MOUNTING BOXES
FLUSH
1 gang: 866ZIC
Boxes must have a minimum depth of 35mm
Rotary operated shutter.
DIMENSIONS
102 x 86mm
FIXING CENTRES
60.3mm
BS 1363-2:1995

MOUNTING BOXES
FLUSH
2 gang: 886ZIC
Boxes must have a minimum depth of 35mm
Rotary operated shutter.
DIMENSIONS
102 x 146mm
FIXING CENTRES
120.6mm
BS 1363-2:1995

MOUNTING BOXES
FLUSH
866ZIC
SURFACE WITH KNOCKOUTS
K899ALM
SURFACE WITHOUT KNOCKOUTS
K829ALM
DIMENSIONS
86 x 86mm
FIXING CENTRES
60.3mm
BS 1363-4:1995

MOUNTING BOXES
FLUSH
866ZIC
SURFACE WITH KNOCKOUTS
K899ALM
SURFACE WITHOUT KNOCKOUTS
K829ALM
DIMENSIONS
86 x 86mm
FIXING CENTRES
60.3mm
BS 1363-4:1995

Albany Plus™

DP WITH TAMPERPROOF FUSE CARRIER SCREW 13 AMP	DP WITH NEON 13 AMP	DP RED ROCKER WITH NEON 13 AMP	DP WITH FLEX OUTLET AND NEON 13 AMP	DP RED ROCKER WITH FLEX OUTLET AND NEON 13 AMP
K941KOBSS 1	**K961BSS** 1	**K961D6BSS** 1	**K971BSS** 5	**K971D6BSS** 5
K941KOBRC 1	**K961BRC** 1	**K961D6BRC** 1	**K971BRC** 1	**K971D6BRC** 5
	K961SAG 1	**K961D6SAG** 1	**K971SAG** 1	
	K961PCR 1		**K971PCR** 1	
MOUNTING BOXES **FLUSH** 866ZIC **SURFACE WITH KNOCKOUTS** K899ALM **SURFACE WITHOUT KNOCKOUTS** K829ALM **DIMENSIONS** 86 x 86mm **FIXING CENTRES** 60.3mm BS 1363-4:1995 Key (3405ZIC) is supplied.	**MOUNTING BOXES** **FLUSH** 866ZIC **SURFACE WITH KNOCKOUTS** K899ALM **SURFACE WITHOUT KNOCKOUTS** K829ALM **DIMENSIONS** 86 x 86mm **FIXING CENTRES** 60.3mm BS 1363-4:1995	**MOUNTING BOXES** **FLUSH** 866ZIC **SURFACE WITH KNOCKOUTS** K899ALM **SURFACE WITHOUT KNOCKOUTS** K829ALM **DIMENSIONS** 86 x 86mm **FIXING CENTRES** 60.3mm BS 1363-4:1995	**MOUNTING BOXES** **FLUSH** 866ZIC **SURFACE WITH KNOCKOUTS** K899ALM **SURFACE WITHOUT KNOCKOUTS** K829ALM **DIMENSIONS** 86 x 86mm **FIXING CENTRES** 60.3mm BS 1363-4:1995	**MOUNTING BOXES** **FLUSH** 866ZIC **SURFACE WITH KNOCKOUTS** K899ALM **SURFACE WITHOUT KNOCKOUTS** K829ALM **DIMENSIONS** 86 x 86mm **FIXING CENTRES** 60.3mm BS 1363-4:1995

Albany Plus™

Connection Units Unswitched

	13 AMP	WITH NEON 13 AMP	WITH FLEX OUTLET AND NEON 13 AMP
FINISHES			
BRUSHED STAINLESS STEEL	K948BSS 5	K958BSS 1	K978BSS 1
BRUSHED CHROME	K948BRC 1	K958BRC 1	K978BRC 1
SATIN GOLD	K948SAG 1		K978SAG 1
POLISHED CHROME	K948PCR 1		K978PCR 1

LEAD TIMES
Please contact our Customer Services Department on
01268 563 404

MOUNTING BOXES
FLUSH
866ZIC
SURFACE WITH KNOCKOUTS
K899ALM
SURFACE WITHOUT KNOCKOUTS
K829ALM
DIMENSIONS
86 x 86mm
FIXING CENTRES
60.3mm
BS 1363-4:1995

MOUNTING BOXES
FLUSH
866ZIC
SURFACE WITH KNOCKOUTS
K899ALM
SURFACE WITHOUT KNOCKOUTS
K829ALM
DIMENSIONS
86 x 86mm
FIXING CENTRES
60.3mm
BS 1363-4:1995

MOUNTING BOXES
FLUSH
866ZIC
SURFACE WITH KNOCKOUTS
K899ALM
SURFACE WITHOUT KNOCKOUTS
K829ALM
DIMENSIONS
86 x 86mm
FIXING CENTRES
60.3mm
BS 1363-4:1995

Albany Plus™

DP Switches

High Current Switches

20 AMP	WITH NEON 20 AMP	WITH FLEX OUTLET, RED ROCKER AND NEON 20 AMP	WITH FLEX OUTLET AND NEON 20 AMP	DP WITH NEON 32 AMP	DP WITH NEON 50 AMP
K5213BSS 1	K5233BSS 1	K5233D6BSS 1	K5250BSS 1	K5106BSS 1	K5236BSS 1
K5213BRC 1	K5233BRC 1	K5233D6BRC 1	K5250BRC 1	K5106BRC 1	K5236BRC 1
	K5233SAG 1		K5250SAG 1	K5106SAG 1	K5236SAG 1
	K5233PCR 1		K5250PCR 1	K5106PCR 1	K5236PCR 1
MOUNTING BOXES FLUSH 866ZIC SURFACE WITH KNOCKOUTS K899ALM SURFACE WITHOUT KNOCKOUTS K829ALM DIMENSIONS 86 x 86mm FIXING CENTRES 60.3mm BS EN 60669-1:1999	MOUNTING BOXES FLUSH 866ZIC SURFACE WITH KNOCKOUTS K899ALM SURFACE WITHOUT KNOCKOUTS K829ALM DIMENSIONS 86 x 86mm FIXING CENTRES 60.3mm BS EN 60669-1:1999	MOUNTING BOXES FLUSH 866ZIC SURFACE WITH KNOCKOUTS K899ALM SURFACE WITHOUT KNOCKOUTS K829ALM DIMENSIONS 86 x 86mm FIXING CENTRES 60.3mm BS EN 60669-1:1999	MOUNTING BOXES FLUSH 866ZIC SURFACE WITH KNOCKOUTS K899ALM SURFACE WITHOUT KNOCKOUTS K829ALM DIMENSIONS 86 x 86mm FIXING CENTRES 60.3mm BS EN 60669-1:1999	MOUNTING BOXES FLUSH 866ZIC (6mm² conductors) 877ZIC (10mm² conductors) SURFACE WITH KNOCKOUTS K899ALM SURFACE WITHOUT KNOCKOUTS K829ALM DIMENSIONS 86 x 86mm FIXING CENTRES 60.3mm BS EN 60669-1:1999	MOUNTING BOXES FLUSH 886ZIC (6mm² conductors) 878ZIC (10mm² conductors) SURFACE WITH KNOCKOUTS K897ALM SURFACE WITHOUT KNOCKOUTS K830ALM DIMENSIONS 86 x 146mm FIXING CENTRES 120.6mm BS EN 60669-1:1999

DP Switches are not recommended for switching large banks of PCs

Albany Plus™

	Cooker Control Unit	Triple Pole & Neutral Switch	Shaver/Toothbrush Supply Units	Flex Outlets (NON UK)	Plateswitches
	DP MAIN SWITCH AND 13 AMP SWITCHSOCKET OUTLET WITH NEONS		DUAL VOLTAGE 115/230V OUTPUT 220/240V INPUT 50/60HZ		SP 2 WAY
	45 AMP	32 AMP			10 AMP
FINISHES					
BRUSHED STAINLESS STEEL	K5261BSS 1	K5114BSS 1	K703BSS 1	K2240BSS 1	K4671BSS 5
BRUSHED CHROME	K5261BRC 1	K5114BRC 1	K703BRC 1	K2240BRC 1	K4671BRC 1
SATIN GOLD	K5261SAG 1	K5114SAG 1	K703SAG 1		K4671SAG 1
POLISHED CHROME	K5261PCR 1	K5114PCR 1	K703PCR 1		K4671PCR 1

LEAD TIMES
Please contact our Customer Services Department on
01268 563 404

MOUNTING BOXES:
FLUSH
886ZIC
(Up to 6mm² conductor)
878ZIC
(Up to 10mm² conductor)
Rotary operated shutter.
DIMENSIONS
86 x 146mm
FIXING CENTRES
120.6mm
BS 4177:1992

MOUNTING BOX
FLUSH
878ZIC
This product is rated at 440 volts with a motor load rating of up to 12kW – 16 HP at 415V 3 phase.
It has a utilisation category of AC22A – switching of mixed resistive and inductive loads including moderate overloads for a continuous duty of 32 amps. Making capacity is 2000 amps peak.
TERMINAL CAPACITY
16mm² conductors.
DIMENSIONS
146 x 86mm
BS EN 60947-3:1992

MOUNTING BOXES:
FLUSH
878ZIC
This design incorporates a double wound isolating transformer rated 20VA at 230 or 115 volts and meets BS EN 61558-2-5:1998 making it safe for use in bathrooms.
Insertion of a shaver/ toothbrush plug automatically switches on by energising the primary side of the isolating transformer – removal automatically switches off. The transformer is protected against overload by an automatic solid state overload device with automatic resetting.
DIMENSIONS
146 x 86mm
FIXING CENTRES
120.6mm
BS EN 61558-2-5:1998

MOUNTING BOXES
FLUSH
866ZIC
SURFACE WITH KNOCKOUTS
K899ALM
SURFACE WITHOUT KNOCKOUTS
K829ALM
CABLE DIAMETER
Minimum 4mm
Maximum 14.5mm
DIMENSIONS
1 gang: 86 x 86mm
FIXING CENTRES
1 gang: 60.3mm
BS 5733:2010

MOUNTING BOXES
FLUSH
3995ZIC
SURFACE WITH KNOCKOUTS
K899ALM
SURFACE WITHOUT KNOCKOUTS
K829ALM
These switches do not have to be derated when used with fluorescent or inductive loads.
Switches can be wired as either one-way or two-way.
DIMENSIONS
86 x 86mm
FIXING CENTRES
60.3mm
BS EN 60669-1:1999
If an intermediate switch is required, a modular (Grid Plus) version is available. Order K3431 grid plate, K3701 grid frame and K4893WHI 20A intermediate switch

Albany Plus™

3 Pole Fan Isolator

2 GANG SP 2 WAY 10 AMP	3 GANG SP 2 WAY 10 AMP	1 GANG SP 2 WAY WIDE ROCKER 10 AMP	2 GANG SP 2 WAY WIDE ROCKER 10 AMP	WITHOUT SWITCHLOCK 10 AMP	SWITCHLOCK FOR FAN ISOLATOR
K4672BSS 1	K4673BSS 5	K4761BSS 5	K4762BSS 5	K4860BSS 1	K4858 10
K4672BRC 1	K4673BRC 1	K4761BRC 1	K4762BRC 1	K4860BRC 1	
K4672SAG 1	K4673SAG 1	K4761SAG 1	K4762SAG 1	K4860SAG 1	
K4672PCR 1	K4673PCR 1	K4761PCR 1	K4762PCR 1	K4860PCR 1	
MOUNTING BOXES **FLUSH** 3995ZIC **SURFACE WITH KNOCKOUTS** K899ALM **SURFACE WITHOUT KNOCKOUTS** K829ALM These switches do not have to be derated when used with fluorescent or inductive loads. Switches can be wired as either one-way or two-way. **DIMENSIONS** 86 x 86mm **FIXING CENTRES** 60.3mm BS EN 60669-1:1999 If an intermediate switch is required, a modular (Grid Plus) version is available. Order K3431 grid plate, K3701 grid frame and K4893WHI 20A intermediate switch	**MOUNTING BOXES** **FLUSH** 3995ZIC **SURFACE WITH KNOCKOUTS** K899ALM **SURFACE WITHOUT KNOCKOUTS** K829ALM These switches do not have to be derated when used with fluorescent or inductive loads. Switches can be wired as either one-way or two-way. **DIMENSIONS** 86 x 86mm **FIXING CENTRES** 60.3mm BS EN 60669-1:1999 If an intermediate switch is required, a modular (Grid Plus) version is available. Order K3431 grid plate, K3701 grid frame and K4893WHI 20A intermediate switch	**MOUNTING BOXES** **FLUSH** 3995ZIC **SURFACE WITH KNOCKOUTS** K899ALM **SURFACE WITHOUT KNOCKOUTS** K829ALM These switches do not have to be derated when used with fluorescent or inductive loads. Switches can be wired as either one-way or two-way. **DIMENSIONS** 86 x 86mm **FIXING CENTRES** 60.3mm BS EN 60669-1:1999 If an intermediate switch is required, a modular (Grid Plus) version is available. Order K3431 grid plate, K3701 grid frame and K4893WHI 20A intermediate switch	**MOUNTING BOXES** **FLUSH** 3995ZIC **SURFACE WITH KNOCKOUTS** K899ALM **SURFACE WITHOUT KNOCKOUTS** K829ALM These switches do not have to be derated when used with fluorescent or inductive loads. Switches can be wired as either one-way or two-way. **DIMENSIONS** 86 x 86mm **FIXING CENTRES** 60.3mm BS EN 60669-1:1999 If an intermediate switch is required, a modular (Grid Plus) version is available. Order K3431 grid plate, K3701 grid frame and K4893WHI 20A intermediate switch	**MOUNTING BOXES** **FLUSH** 3995ZIC **SURFACE** K2160WHI For local isolation of fans with or without timers for repair or routine maintenance. **DIMENSIONS** 86 x 86mm **FIXING CENTRES** 60.3mm BS EN 60669-2-4	For use with K4860

Albany Plus™

Standard Dimmer Switches

FINISHES	2 WAY SINGLE 230V A.C. 50HZ 40W MIN - 250W MAX	2 WAY SINGLE 230V A.C. 50HZ 60W MIN - 500W MAX	2 WAY DOUBLE 230V A.C. 50HZ 40W MIN - 250W MAX FOR EACH DIMMER	2 WAY DOUBLE 230V A.C. 50HZ 60W MIN - 450W MAX FOR EACH DIMMER	2 WAY TRIPLE 230V A.C. 50HZ 40W MIN - 250W MAX FOR EACH DIMMER
BRUSHED STAINLESS STEEL	K1534BSS 1	K1551BSS 1	K1532BSS 1	K1552BSS 1	K1533BSS 1
BRUSHED CHROME	K1534BRC 1	K1551BRC 1	K1532BRC 1	K1552BRC 1	K1533BRC 1
SATIN GOLD	K1534SAG 1	K1551SAG 1	K1532SAG 1	K1552SAG 1	K1533SAG 1
POLISHED CHROME	K1534PCR 1	K1551PCR 1	K1532PCR 1	K1552PCR 1	K1533PCR 1

LEAD TIMES
Please contact our Customer Services Department on
01268 563 404

BS EN 60669-2-1, overload protected and are suitable for use with tungsten filament lamps only.
Two way dimmers use push on/push off switches.
They are not suitable for use with fluorescent loads, LED or with electronic/wire-wound transformers in low voltage lighting systems.
Suitable for use with good quality electronic or wire wound transformers. Can also be used with good quality mains voltage halogen lamps incorporating GU10 bases.
Please check with lamp manufacturer to determine suitability.

Albany Plus™

Intelligent Dimmer Switches

2 WAY SINGLE 230V A.C. 50HZ 40W/VA MIN - 300W/240VA MAX	2 WAY SINGLE 230V A.C. 50HZ 60W/VA MIN - 500W/400VA MAX	2 WAY DOUBLE 230V A.C. 50HZ 40W/VA MIN - 300W/240VA MAX	2 WAY DOUBLE 230V A.C. 50HZ 60W/VA MIN - 450W/360VA MAX FOR EACH DIMMER
K1536BSSLV 1	**K1551BSSLV** 1	**K1532BSSLV** 1	**K1552BSSLV** 1
K1536BRCLV 1	**K1551BRCLV** 1	**K1532BRCLV** 1	**K1552BRCLV** 1
K1536SAGLV 1	**K1551SAGLV** 1	**K1532SAGLV** 1	**K1552SAGLV** 1
K1536PCRLV 1	**K1551PCRLV** 1	**K1532PCRLV** 1	**K1552PCRLV** 1

BS EN 60669-2-1, 'state of the art' micro controller based circuitry to provide soft start and overload protection.
The soft start feature helps in greatly prolonging the life of tungsten, or halogen lamps.
Suitable for use with good quality electronic or wire wound transformers. Can also be used with good quality mains voltage halogen lamps incorporating GU10 bases.
Please check with lamp manufacturer to determine suitability.
Not suitable for use with fluorescent or LED loads.

Albany Plus™

Blank Plates

TV/FM Coaxial Socket Outlets

FINISHES	1 GANG		2 GANG		NON ISOLATED		ISOLATED		TWIN OUTLET WITH TV/FM DIPLEXER	
BRUSHED STAINLESS STEEL	K3330BSS	10	K3329BSS	5	K3580BSS	5	K3581BSS	5	K3582BSS	5
BRUSHED CHROME	K3330BRC	1	K3329BRC	1	K3580BRC	1	K3581BRC	1	K3582BRC	1
SATIN GOLD	K3330SAG	1	K3329SAG	1	K3580SAG	1	K3581SAG	1	K3582SAG	1
POLISHED CHROME	K3330PCR	1	K3329PCR	1	K3580PCR	1	K3581PCR	1	K3582PCR	1

LEAD TIMES
Please contact our Customer Services Department on
01268 563 404

MOUNTING BOXES:
FLUSH
1 gang: 866ZIC
SURFACE WITH KNOCKOUTS
1 gang: K899ALM
SURFACE WITHOUT KNOCKOUTS
K829ALM
DIMENSIONS
86 x 86mm
FIXING CENTRES
60.3mm
BS 5733:2010

MOUNTING BOXES:
FLUSH
2 gang: 886ZIC
SURFACE WITH KNOCKOUTS
2 gang: K897ALM
SURFACE WITHOUT KNOCKOUTS
K830ALM
DIMENSIONS
86 x 146mm
FIXING CENTRES
120.6mm
BS 5733:2010

MOUNTING BOXES
FLUSH
861ZIC
SURFACE WITH KNOCKOUTS
K899ALM
SURFACE WITHOUT KNOCKOUTS
K829ALM
K3580
Single outlet for connection to a single TV or FM co-axial aerial lead

MOUNTING BOXES
FLUSH
861ZIC
SURFACE WITH KNOCKOUTS
K899ALM
SURFACE WITHOUT KNOCKOUTS
K829ALM
K3581
Provides safety isolation rated at 2000Va.c. between aerial lead and socket. Single outlet for connection to a single TV or FM co-axial aerial lead

MOUNTING BOXES
FLUSH
861ZIC
SURFACE WITH KNOCKOUTS
K899ALM
SURFACE WITHOUT KNOCKOUTS
K829ALM
K3582
Provides safety isolation rated at 2000Va.c. between aerial lead and socket. Single outlet for connection to a single TV or FM co-axial aerial lead. Twin outlet with TV/FM

Albany Plus™

Satellite Socket Outlets

SINGLE OUTLET
F TYPE SATELLITE SOCKET

Floor Mounted Euro Frames

	1 GANG STANDARD	1 GANG RECESSED	2 GANG STANDARD	2 GANG RECESSED
K3585BSS 1	790BSS 1	791BSS 1	795BSS 1	796BSS 1
K3585BRC 1	790BRC 1	791BRC 1	795BRC 1	796BRC 1
K3585SAG 1	790SAG 1	791SAG 1	795SAG 1	796SAG 1
K3585PCR 1				

DIMENSIONS
86 x 86mm
FIXING CENTRES
60.3mm
IEC 169-2:1965
BS 5733:2010 where applicable

MOUNTING BOXES
FLUSH
1 gang: 866ZIC
Boxes must have a minimum depth of 35mm
DIMENSIONS
1 gang: 102 x 86mm
FIXING CENTRES
1 gang: 60.3mm
NOTE
Use 'F' type connectors with recessed euro frame products. This ensures full lid closure when the aerial lead is disconnected.
Power sockets must only be used with the standard Euro Frame products as the recessed type may NOT allow full plug engagement.
BS 5733:2010
For a complete selection of Euro modules, see pages 46-48.

MOUNTING BOXES
FLUSH
1 gang: 866ZIC
Boxes must have a minimum depth of 35mm
DIMENSIONS
1 gang: 102 x 86mm
FIXING CENTRES
1 gang: 60.3mm
NOTE
Use 'F' type connectors with recessed euro frame products. This ensures full lid closure when the aerial lead is disconnected.
Power sockets must only be used with the standard Euro Frame products as the recessed type may NOT allow full plug engagement.
BS 5733:2010
For a complete selection of Euro modules, see pages 46-48.

MOUNTING BOXES
FLUSH
2 gang: 886ZIC
Boxes must have a minimum depth of 35mm
DIMENSIONS
2 gang: 102 x 146mm
FIXING CENTRES
2 gang: 120.6mm
NOTE
Use 'F' type connectors with recessed euro frame products. This ensures full lid closure when the aerial lead is disconnected.
Power sockets must only be used with the standard Euro Frame products as the recessed type may NOT allow full plug engagement.
BS 5733:2010
For a complete selection of Euro modules, see pages 46-48.

MOUNTING BOXES
FLUSH
2 gang: 886ZIC
Boxes must have a minimum depth of 35mm
DIMENSIONS
2 gang: 102 x 146mm
FIXING CENTRES
2 gang: 120.6mm
NOTE
Use 'F' type connectors with recessed euro frame products. This ensures full lid closure when the aerial lead is disconnected.
Power sockets must only be used with the standard Euro Frame products as the recessed type may NOT allow full plug engagement.
BS 5733:2010
For a complete selection of Euro modules, see pages 46-48.

Fully screened modular TV/Satellite outlets are available to fit Euro frontplates.
See page 48 for details.

Albany Plus™

Euro Modular Frontplates

EURO
1 MODULE
25 X 50MM

EURO
2 MODULE
50 X 50MM

EURO
4 MODULE
100 X 50MM

LJU6C Datacom Frontplate

1 GANG
2 MODULE
22 X 37MM

FINISHES								
BRUSHED STAINLESS STEEL	K181BSS	5	K182BSS	5	K184BSS	5	K172BSS	5
BRUSHED CHROME	K181BRC	1	K182BRC	1	K184BRC	1	K172BRC	1
SATIN GOLD	K181SAG	1	K182SAG	1	K184SAG	1	K172SAG	1
POLISHED CHROME	K181PCR	5	K182PCR	5	K184PCR	5	K172PCR	5

LEAD TIMES
Please contact our Customer Services Department on
01268 563 404

DIMENSIONS
86 x 86mm
BS 5733:2010
NOTE
Euro Data Frontplates: no grid required, modules just clip into place.

DIMENSIONS
86 x 86mm
BS 5733:2010
NOTE
Euro Data Frontplates: no grid required, modules just clip into place.

DIMENSIONS
86 x 146mm
BS 5733:2010
NOTE
Euro Data Frontplates: no grid required, modules just clip into place.

DIMENSIONS
86 x 86mm
BS 5733:2010
NOTE
LJU6C Data Frontplates: no grid required, modules just clip into place.

For a complete selection of Euro modules and more information see pages 46-48.

Albany Plus™

Euro Power Modules

UK 250V 2 MODULE 50 X 50MM 13 AMP	GERMAN 2P+E 250V SHUTTERED 2 MODULE (NON UK) 16 AMP	AMERICAN 127V SHUTTERED 2 MODULE 50 X 50MM (NON UK) 15 AMP	UK 250V SHUTTERED 2 MODULE 50 X 50MM 5 AMP	FRENCH/BELGIAN 2P+E 250V SHUTTERED 2 MODULE 50 X 50MM (NON UK) 16 AMP
K5830WHI 10 **K5830BLK** 10	**K5831WHI** 10 **K5831BLK** 10	**K5832WHI** 10 **K5832BLK** 10	**K5833WHI** 10 **K5833BLK** 10	**K5834WHI** 10 **K5834BLK** 10
MOUNTING BOX 35mm minimum 46mm (for extra wiring space). **DIMENSIONS** 50 x 50mm BS 1363 Part 2:1995	**MOUNTING BOX** 46mm **DIMENSIONS** 50 x 50mm IEC 60884-1:2006	**MOUNTING BOX** 35mm 46mm (for extra wiring space) **DIMENSIONS** 50 x 50mm SASO 2204:2003	**MOUNTING BOX** 35mm minimum 46mm (for extra wiring space). **DIMENSIONS** 50 x 50mm BS 546:1950	**MOUNTING BOX** 46mm **DIMENSIONS** 50 x 50mm NF C61-314

Albany Plus™

Euro Power Modules

USB CHARGING
2 MODULE
50 X 50MM

Grid Plus Modular Frontplates

(SUPPLIED WITH GRIDS)

1 MODULE | 2 MODULE | 3 MODULE

FINISHES	Euro Power Modules		1 MODULE		2 MODULE		3 MODULE	
BRUSHED STAINLESS STEEL			K3431BSS	10	K3432BSS	10	K3433BSS	5
BRUSHED CHROME	K5837WHI	1	K3431BRC	1	K3432BRC	1	K3433BRC	1
SATIN GOLD	K5837BLK	1	K3431SAG	1	K3432SAG	1	K3433SAG	1
POLISHED CHROME			K3431PCR	1	K3432PCR	1	K3433PCR	1

LEAD TIMES
Please contact our Customer Services Department on
01268 563 404

USB charging sockets, each capable of supporting 2A charge (total of 2A)

K5837 MOUNTING BOX
Minimum Box depth 35mm
46mm for extra wiring space
IEC 60950-1
IEC 61000-6-1/3

DIMENSIONS
86 x 86mm
BS 5733:2010

DIMENSIONS
86 x 86mm
BS 5733:2010

DIMENSIONS
86 x 146mm
BS 5733:2010

Mains operated products and extra low voltage modules must not be installed within the same frontplate. Refer to BS 7671:2008 for details.

For a complete selection of Grid Plus switch modules see Grid Plus pages 190-205.

Albany Plus™

4 MODULE		6 MODULE		8 MODULE	
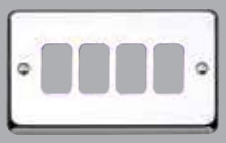					
K3434BSS	5	**K3436BSS**	1	**K3438BSS**	1
K3434BRC	1	**K3436BRC**	1	**K3438BRC**	1
K3434SAG	1	**K3436SAG**	1	**K3438SAG**	1
K3434PCR	1	**K3436PCR**	1	**K3438PCR**	1
DIMENSIONS 86 x 146mm BS 5733:2010		**DIMENSIONS** 146 x 146mm BS 5733:2010		**DIMENSIONS** 146 x 146mm BS 5733:2010	

For a complete selection of Grid Plus switch modules see Grid Plus pages 190-205.

Albany Plus™

Grid Plus Modular Frontplates
(SUPPLIED WITH GRIDS)

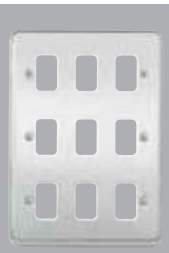
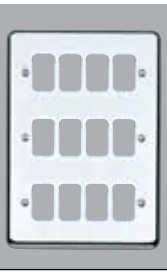

FINISHES	9 MODULE		12 MODULE		18 MODULE		24 MODULE	
BRUSHED STAINLESS STEEL	K3439BSS	1	K3442BSS	1	K3448BSS	1	K3454BSS	1
BRUSHED CHROME	K3439BRC	1	K3442BRC	1	K3448BRC	1	K3454BRC	1
SATIN GOLD	K3439SAG	1	K3442SAG	1	K3448SAG	1	K3454SAG	1
POLISHED CHROME	K3439PCR	1	K3442PCR	1	K3448PCR	1	K3454PCR	1

LEAD TIMES
Please contact our Customer Services Department on
01268 563 404

DIMENSIONS
9 module: 206 x 146mm
BS 5733:2010

DIMENSIONS
206 x 146mm
BS 5733:2010

DIMENSIONS
206 x 206mm
BS 5733:2010

DIMENSIONS
206 x 207mm
BS 5733:2010

For a complete selection of Grid Plus switch modules see Grid Plus pages 190-205.

GRID PLUS

RANGE INTRODUCTION

Grid Plus is a modular switching and monitoring system in a choice of attractive finishes to match complementary accessory ranges.

The comprehensive range of modules includes switches, indicators, dimmers, secret key switches, printed switches and buzzer units – making it the ideal system for commercial and public building applications.

Easy to fit and change, Grid Plus modules simply clip into place from the front of the mounting frame.

HOW TO SPECIFY

A modular switching and monitoring wiring device system. Modules to have a simple 'clip fit' mechanism to hold them to the mounting frame, which do not require specialist tools and are fitted in to place from the front. Accompanying front plates must be able to hold up to 24 modules in a variety of aesthetics and finishes. All products must be made in the UK and provided with a 20 year guarantee.

FEATURES & BENEFITS

VAST RANGE

Comprehensive range of frontplates and grid modules from a single manufacturer making the range flexible and suitable for more installations.

EASE OF INSTALLATION

Grid modules 'clip fit' to the frame without any requirement for special tools. They can be moved, removed or replaced whilst the frame is fitted to the box making installation or replacement speedy and simple.

DURABILITY

Grid frames are made from pre-galvanised steel to provide extra high corrosion resistance, preventing tarnishing and ensuring the longevity of the product.

SAFETY

Grid frames earth terminal capacity exceeds current standards for total safety assurance. All products are 100% tested before delivery for confidence of a 'fit and forget' installation. 20 year guarantee (10 years for electronic devices).

Grid Plus

	Blank Inserts	Switch Modules 10 Amp				
	1 MODULE	1 WAY SP 10 AMP	1 WAY DP 10 AMP	2 WAY SP 10 AMP	2 WAY RETRACTIVE SWITCH SP 10 AMP	2 WAY RED RETRACTIVE SWITCH SP 10 AMP
FINISHES						
WHITE	**K4880WHI** 10	**K4881WHI** 10	**K4981WHI** 10	**K4882WHI** 10	**K4885WHI** 10	**K4885RED** 1
BLACK	**K4880BLK** 10	**K4881BLK** 10	**K4981BLK** 10	**K4882BLK** 1	**K4885BLK** 10	**K4885REDB** 1
GRAPHITE	**K4880GRA** 10	**K4881GRA** 10		**K4882GRA** 10		
		These switches do NOT have to be derated when used with fluorescent or inductive loads. BS EN 60669-1:1999	These switches do NOT have to be derated when used with fluorescent or inductive loads. BS EN 60669-1:1999	These switches do NOT have to be derated when used with fluorescent or inductive loads. BS EN 60669-1:1999	**NOTE** Push switches are not designed for flourescent loads. BS EN 60669-1:1999	**NOTE** Push switches are not designed for flourescent loads. BS EN 60669-1:1999

B suffix on the list number denotes black inserts

Switch Modules 20 Amp

2 WAY RETRACTIVE SWITCH MARKED WITH BELL SYMBOL SP 10 AMP	2 WAY RETRACTIVE SWITCH MARKED 'PRESS' SP 10 AMP	2 WAY CENTRE OFF RETRACTIVE SWITCH SP 10 AMP	1 WAY SP 20 AMP	1 WAY PUSH TO MAKE DP 20 AMP	1 WAY RED ROCKER PUSH TO MAKE DP 20 AMP
K4885BWHI 1	K4885PWHI 10	K4900WHI 10	K4891WHI 10	K4910WHI 10	K4910RED 10
K4885BBLK 1	K4885PBLK 1	K4900BLK 10	K4891BLK 10	K4910BLK 10	K4910REDB 1
			K4891GRA 10		
NOTE Push switches are not designed for fluorescent loads. BS EN 60669-1:1999	NOTE Push switches are not designed for fluorescent loads. BS EN 60669-1:1999	NOTE Push switches are not designed for fluorescent loads. BS EN 60669-1:1999	These switches do NOT have to be derated when used with fluorescent or inductive loads. BS EN 60669-1:1999	NOTE Push switches are not designed for fluorescent loads. BS EN 60669-1:1999	NOTE Push switches are not designed for fluorescent loads. BS EN 60669-1:1999

B suffix on the list number denotes black inserts

Grid Plus

Switch Modules 20 Amp

	1 WAY PUSH TO BREAK RETRACTIVE DP 20 AMP	1 WAY RED ROCKER PUSH TO BREAK RETRACTIVE DP 20 AMP	2 WAY SP 20 AMP	2 WAY RED ROCKER SP 20 AMP	2 WAY SWITCH WITH INTEGRAL NEON LOCATOR SP 20 AMP	2 WAY AND CENTRE OFF SP 20 AMP
FINISHES						
WHITE	**K4915WHI** 10	**K4915RED** 10	**K4892WHI** 10	**K4892RED** 10	**K4892LWHI** 10	**K4899WHI** 10
BLACK	**K4915BLK** 10	**K4915REDB** 1	**K4892BLK** 10	**K4892REDB** 1	**K4892LBLK** 1	**K4899BLK** 10
GRAPHITE						
	NOTE Push switches are not designed for fluorescent loads. BS EN 60669-1:1999	**NOTE** Push switches are not designed for fluorescent loads. BS EN 60669-1:1999	These switches do NOT have to be derated when used with fluorescent or inductive loads. BS EN 60669-1:1999	These switches do NOT have to be derated when used with fluorescent or inductive loads. BS EN 60669-1:1999	These switches do NOT have to be derated when used with fluorescent or inductive loads. BS EN 60669-1:1999	These switches do NOT have to be derated when used with fluorescent or inductive loads. BS EN 60669-1:1999

B suffix on the list number denotes black inserts

B suffix on the list number denotes black inserts

RED ROCKER 2 WAY AND CENTRE OFF SP 20 AMP	INTERMEDIATE 20 AMP	INTERMEDIATE RED ROCKER 20 AMP	1 WAY DP 20 AMP	1 WAY NEON DP 20 AMP	1 WAY WITH WINDOW DP 20 AMP
K4899RED 10	K4893WHI 10	K4893RED 10	K4896WHI 10	K4896NWHI 1	K4896WWHI 10
K4899REDB 1	K4893BLK 10	K4893REDB 10	K4896BLK 10	K4896NBLK 1	K4896WBLK 10
			K4896GRA 10	K4896NGRA 1	
These switches do NOT have to be derated when used with fluorescent or inductive loads. BS EN 60669-1:1999	These switches do NOT have to be derated when used with fluorescent or inductive loads. BS EN 60669-1:1999	These switches do NOT have to be derated when used with fluorescent or inductive loads. BS EN 60669-1:1999	These switches do NOT have to be derated when used with fluorescent or inductive loads. BS EN 60669-1:1999	These switches do NOT have to be derated when used with fluorescent or inductive loads. BS EN 60669-1:1999	These switches do NOT have to be derated when used with fluorescent or inductive loads. BS EN 60669-1:1999

B suffix on the list number denotes black inserts

B suffix on the list number denotes black inserts

Grid Plus

Switch Modules 20 Amp

Printed Modules with and without Neon

FINISHES	1 WAY RED ROCKER DP 20 AMP	1 WAY BOILER DP 20 AMP	1 WAY BOILER NEON DP 20 AMP	1 WAY DISHWASHER DP 20 AMP	1 WAY DISHWASHER NEON DP 20 AMP
WHITE	K4896RED 10	K4896BRWHI 1	K4896NBRWHI 1	K4896DWWHI 1	K4896NDWWHI 1
BLACK	K4896REDB 1	K4896BRBLK 1	K4896NBRBLK 1	K4896DWBLK 1	K4896NDWBLK 1
	These switches do NOT have to be derated when used with fluorescent or inductive loads. BS EN 60669-1:1999	BS EN 60669-1:1999	BS EN 60669-1:1999	BS EN 60669-1:1999	BS EN 60669-1:1999

1 WAY COOKER HOOD DP 20 AMP	1 WAY COOKER HOOD NEON DP 20 AMP	1 WAY FAN DP 20 AMP	1 WAY FAN NEON DP 20 AMP	1 WAY FRIDGE DP 20 AMP
K4896CHWHI 1	**K4896NCHWHI** 1	**K4896FNWHI** 1	**K4896NFNWHI** 1	**K4896FGWHI** 1
K4896CHBLK 1	**K4896NCHBLK** 1	**K4896FNBLK** 1	**K4896NFNBLK** 1	**K4896FGBLK** 1
BS EN 60669-1:1999	BS EN 60669-1:1999	BS EN 60669-1:1999	BS EN 60669-1:1999	BS EN 60669-1:1999

Grid Plus

Printed Modules with and without Neon

	1 WAY FRIDGE NEON DP 20 AMP	1 WAY FREEZER DP 20 AMP	1 WAY FREEZER NEON DP 20 AMP	1 WAY FRIDGE FREEZER DP 20 AMP	1 WAY FRIDGE FREEZER NEON DP 20 AMP
FINISHES					
WHITE	**K4896NFGWHI** 1	**K4896FZWHI** 1	**K4896NFZWHI** 1	**K4896FFWHI** 1	**K4896NFFWHI** 1
BLACK	**K4896NFGBLK** 1	**K4896FZBLK** 1	**K4896NFZBLK** 1	**K4896FFBLK** 1	**K4896NFFBLK** 1
	BS EN 60669-1:1999	BS EN 60669-1:1999	BS EN 60669-1:1999	BS EN 60669-1:1999	BS EN 60669-1:1999

1 WAY WASTE DISPOSAL DP 20 AMP	1 WAY WASTE DISPOSAL NEON DP 20 AMP	1 WAY WASHING MACHINE DP 20 AMP	1 WAY WASHING MACHINE NEON DP 20 AMP	1 WAY TUMBLE DRYER DP 20 AMP	1 WAY TUMBLE DRYER NEON DP 20 AMP
K4896WDWHI 1	**K4896NWDWHI** 1	**K4896WMWHI** 1	**K4896NWMWHI** 1	**K4896TDWHI** 1	**K4896NTDWHI** 1
K4896WDBLK 1	**K4896NWDBLK** 1	**K4896WMBLK** 1	**K4896NWMBLK** 1	**K4896TDBLK** 1	**K4896NTDBLK** 1
BS EN 60669-1:1999	BS EN 60669-1:1999	BS EN 60669-1:1999	BS EN 60669-1:1999	BS EN 60669-1:1999	BS EN 60669-1:1999

Grid Plus

Printed Modules with and without Neon

FINISHES	1 WAY WASHER DRYER DP 20 AMP	1 WAY WASHER DRYER NEON DP 20 AMP	1 WAY MICROWAVE DP 20 AMP	1 WAY MICROWAVE NEON DP 20 AMP	1 WAY HEATER DP 20 AMP
WHITE	K4896WDRWHI 1	K4896NWDRWHI 1	K4896MWWHI 1	K4896NMWWHI 1	K4896HRWHI 1
BLACK	K4896WDRBLK 1	K4896NWDRBLK 1	K4896MWBLK 1	K4896NMWBLK 1	K4896HRBLK 1
	BS EN 60669-1:1999	BS EN 60669-1:1999	BS EN 60669-1:1999	BS EN 60669-1:1999	BS EN 60669-1:1999

1 WAY HEATER NEON DP 20 AMP	1 WAY OVEN DP 20 AMP	1 WAY OVEN NEON DP 20 AMP	1 WAY HOB DP 20 AMP	1 WAY HOB NEON DP 20 AMP	1 WAY IMMERSION HEATER DP 20 AMP
K4896NHRWHI 1	**K4896OVWHI** 1	**K4896NOVWHI** 1	**K4896HBWHI** 1	**K4896NHBWHI** 1	**K4896IHWHI** 1
K4896NHRBLK 1	**K4896OVBLK** 1	**K4896NOVBLK** 1	**K4896HBBLK** 1	**K4896NHBBLK** 1	**K4896IHBLK** 1
BS EN 60669-1:1999	BS EN 60669-1:1999	BS EN 60669-1:1999	BS EN 60669-1:1999	BS EN 60669-1:1999	BS EN 60669-1:1999

Grid Plus

Printed Modules with and without Neon

FINISHES	1 WAY IMMERSION HEATER NEON DP 20 AMP	1 WAY PLINTH HEATER DP 20 AMP	1 WAY PLINTH HEATER NEON DP 20 AMP	1 WAY WORKTOP LIGHTING DP 20 AMP	1 WAY WORKTOP LIGHTING NEON DP 20 AMP
WHITE	K4896NIHWHI 1	K4896PHWHI 1	K4896NPHWHI 1	K4896WLWHI 1	K4896NWLWHI 1
BLACK		K4896PHBLK 1		K4896WLBLK 1	K4896NWLBLK 1
	BS EN 60669-1:1999	BS EN 60669-1:1999	BS EN 60669-1:1999	BS EN 60669-1:1999	BS EN 60669-1:1999

1 WAY WINE COOLER DP 20 AMP	1 WAY WINE COOLER NEON DP 20 AMP	1 WAY WARMING DRAWER DP 20 AMP	1 WAY WARMING DRAWER NEON DP 20 AMP	1 WAY COFFEE MACHINE DP 20 AMP	1 WAY COFFEE MACHINE NEON DP 20 AMP
K4896WCWHI 1	**K4896NWCWHI** 1	**K4896WDAWHI** 1	**K4896NWDAWHI** 1	**K4896CMWHI** 1	**K4896NCMWHI** 1
K4896WCBLK 1	**K4896NWCBLK** 1	**K4896WDABLK** 1	**K4896NWDABLK** 1	**K4896CMBLK** 1	**K4896NCMBLK** 1
BS EN 60669-1:1999	BS EN 60669-1:1999	BS EN 60669-1:1999	BS EN 60669-1:1999	BS EN 60669-1:1999	BS EN 60669-1:1999

Grid Plus

Secret Key Switch Modules

	INTERMEDIATE SECRET KEY SWITCH 20 AMP	2 WAY SECRET KEY SWITCH SP 20 AMP	2 WAY SECRET KEY SWITCH MARKED 'EMG LTG TEST' SP 20 AMP	1 WAY SECRET KEY SWITCH DP 20 AMP	EMERGENCY LIGHTING DP 20 AMP
					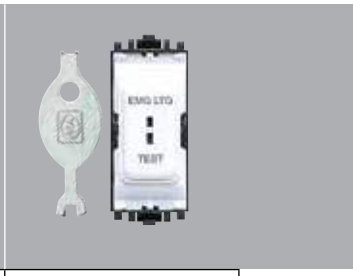
FINISHES					
WHITE	**K4894WHI** 10	**K4898WHI** 10	**K4898ELWHI** 10	**K4917WHI** 10	**K4917ELWHI** 10
BLACK	**K4894BLK** 1	**K4898BLK** 1	**K4898ELBLK** 1	**K4917BLK** 1	
	These switches do NOT have to be derated when used with fluorescent or inductive loads. BS EN 60669-1:1999 Key (3405ZIC) is supplied.	These switches do NOT have to be derated when used with fluorescent or inductive loads. BS EN 60669-1:1999 Key (3405ZIC) is supplied.	These switches do NOT have to be derated when used with fluorescent or inductive loads. BS EN 60669-1:1999 Key (3405ZIC) is supplied.	These switches do NOT have to be derated when used with fluorescent or inductive loads. BS EN 60669-1:1999 Key (3405ZIC) is supplied.	These switches do NOT have to be derated when used with fluorescent or inductive loads. BS EN 60669-1:1999 Key (3405ZIC) is supplied.

Indicator Unit Modules

2 WAY SECRET KEY SWITCH (BIASED 1 WAY) SP 20 AMP	200-250V NEON	200-250V NEON	200-250V FLUORESCENT	21-36V FILAMENT	21-36V FILAMENT
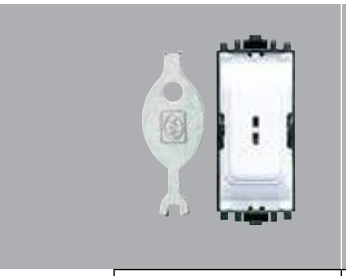					
K4918WHI 10	K4889RED 10	K4889AMB 10	K4889GRN 10	K4836RED 10	K4836AMB 10
K4918BLK 10	K4889REDB 1				
These switches do NOT have to be derated when used with fluorescent or inductive loads. BS EN 60669-1:1999 Key (3405ZIC) is supplied.	BS 5733:2010	BS 5733:2010	BS 5733:2010	BS 5733:2010	BS 5733:2010

B suffix on the list number denotes black inserts

Will Operate On Both A.C. And D.C

Grid Plus

Indicator Unit Modules

21-36V
FILAMENT

Dimmer Switch Modules

TUNGSTEN FILAMENT AND LOW VOLTAGE LIGHTING

40W/VA-220W/
180VA MAX
230V A.C., 50HZ
1 MODULE

60W/VA-400W/
320VA MAX
230V A.C., 50HZ
2 MODULE

0-10V/1-10V
FLUORESCENT
CONTROLLER
1 MODULE

40-220W/180VA/
4-70W
LED INTELLIGENT
DIMMER
1 MODULE

FINISHES									
WHITE	K4836GRN	10	K4501WHILV	1	K4500WHILV	1	K4499WHI	1	K4511WHILV	1
BLACK			K4501BLKLV	1	K4500BLKLV	1	K4499BLK	1	K4511BLKLV	1

BS 5733:2010

These dimmers employ the latest microcontroller based circuitry to provide electronic soft start and overload protection.
Suitable for use with good quality electronic or wire wound transformers. Can also be used with good quality mains voltage halogen lamps incorporating GU10 bases. Please check with lamp manufacturer to determine suitability.
K4501WHI/BLK Max. No. of low voltage T/F's – 3
K4500WHI/BLK Max. No. of low voltage T/F's – 5
Not suitable for fluorescent loads.
All dimmers have push on – push off, 2 way switches, integral with rotary control.
NOTE
Refer to technical section for derating.
Conform to BS EN 60669-2-1 and BS EN 55015

MK Fluorescent Grid Dimmers are low voltage controllers for connection to 1-10V controllable ballasts.

K4511WHILV 1 Module 2 Way 40-220W/180VA/4-70W LED Intelligent Dimmer.

K4511BLKLV 1 Module 2 Way 40-220W/180VA/4-70W LED Intelligent Dimmer.

Will Operate On Both A.C. And D.C

Accessory Modules

SINGLE TV CO-AXIAL OUTLET NON-ISOLATED	SINGLE TV CO-AXIAL OUTLET ISOLATED	200-250V A.C. BUZZER UNIT	21-36V A.C. BUZZER UNIT	16A CORD OUTLET	13A FUSE UNIT	13A FUSE UNIT WITH TAMPERPROOF SCREW
						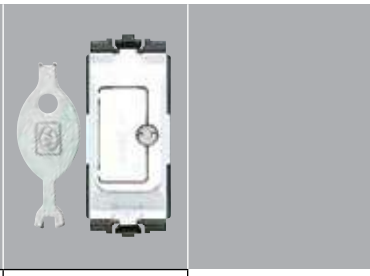
K4520WHI 10	**K4521WHI** 10	**K4000WHI** 10	**K4001WHI** 10	**K4886WHI** 10	**K4890WHI** 10	**K4890KOWHI** 10
K4520BLK 10	**K4521BLK** 10			**K4886BLK** 10	**K4890BLK** 10	**K4890KOBLK** 10
For direct connection to TV or FM aerial co-axial downlead. NOT to be used in same enclosure as mains exceeding 50V. BS 3041:1977 IEC 169-2:1965 BS 5733:2010 where applicable.	For direct connection to TV or FM aerial co-axial downlead. NOT to be used in same enclosure as mains exceeding 50V. BS 3041:1977 IEC 169-2:1965 BS 5733:2010 where applicable.	**SOUND OUTPUT LEVEL** Av 61 db @ 15 feet. BS 5733:2010	**SOUND OUTPUT LEVEL** Av 61 db @ 15 feet. BS 5733:2010	Complete with 3 pairs of terminals. The supply terminals are suitable for up to 2 x 2.5mm² or 1 x 4mm² solid conductors. The load terminals are suitable for one 1.5mm² flexible cord. A cord grip is also fitted. BS 5733:2010	Fuse carrier comes with 13A cartridge fuse link to BS 1362. BS 5733:2010	Fuse carrier comes with 13A cartridge fuse link to BS 1362. BS 5733:2010 Key (3405ZIC) is supplied.

Grid Plus

SELECTION CHART

	1	2	3	4	6
	COVER PLATES				
LOGIC PLUS™	**K3631WHI/GRA** 10	**K3632WHI/GRA** 10	**K3633WHI/GRA** 10	**K3634WHI/GRA** 10	**K3636WHI/GRA** 1
METALCLAD PLUS™	**K3491ALM** 10	**K3492ALM** 10	**K3493ALM** 5	**K3494ALM** 5	**K3496ALM** 1
ALBANY PLUS™ SEE ALBANY PLUS PG 167	**K3431** 1	**K3432** 1	**K3433** 1	**K3434** 1	**K3436** 1
EDGE™ SEE EDGE PG 130	**K14331** 1	**K14332** 1	**K14333** 1	**K14334** 1	**K14346** 1
ASPECT SEE ASPECT PG 98	**K24331** 1	**K24332** 1	**K24333** 1	**K24334** 1	**K24346** 1
	BOXES				
LOGIC PLUS FLUSH	**891ALM** 10 2 X 20MM KNOCKOUTS	**891ALM** 10 2 X 20MM KNOCKOUTS	**892ALM** 5 4 X 20MM, 4 X 25MM KNOCKOUTS	**892ALM** 5 4 X 20MM, 4 X 25MM KNOCKOUTS	**893ALM** 5 4 X 20MM, 4 X 25MM KNOCKOUTS
	821ALM 10 WITHOUT KNOCKOUTS	**821ALM** 10 WITHOUT KNOCKOUTS	**822ALM** 5 WITHOUT KNOCKOUTS	**822ALM** 5 WITHOUT KNOCKOUTS	**823ALM** 5 WITHOUT KNOCKOUTS
LOGIC PLUS SURFACE METAL	**K2213ALM** 5 5 X 20MM KNOCKOUTS	**K2213ALM** 5 5 X 20MM KNOCKOUTS	**K2214ALM** 5 7 X 20MM KNOCKOUTS	**K2214ALM** 5 7 X 20MM KNOCKOUTS	
	K2211ALM 5 WITHOUT KNOCKOUTS	**K2211ALM** 5 WITHOUT KNOCKOUTS	**K2212ALM** 5 WITHOUT KNOCKOUTS	**K2212ALM** 5 WITHOUT KNOCKOUTS	
LOGIC PLUS SURFACE MOULDED	**K2140WHI** 10 WITHOUT KNOCKOUTS	**K2140WHI** 10 WITHOUT KNOCKOUTS	**K2142WHI** 5 WITHOUT KNOCKOUTS	**K2142WHI** 5 WITHOUT KNOCKOUTS	
LOGIC PLUS SURFACE PVC	**K2181WHI** 10 WITHOUT KNOCKOUTS	**K2181WHI** 10 WITHOUT KNOCKOUTS	**K2183WHI** 5 WITHOUT KNOCKOUTS	**K2183WHI** 5 WITHOUT KNOCKOUTS	
METALCLAD PLUS & ALBANY PLUS SURFACE	**K8891ALM** 10 5 X 20MM KNOCKOUTS	**K8891ALM** 10 5 X 20MM KNOCKOUTS	**K8892ALM** 5 7 X 20MM KNOCKOUTS	**K8892ALM** 5 7 X 20MM KNOCKOUTS	**K8893ALM** 5 4 X 20MM, 4 X 25MM KNOCKOUTS
	K8821ALM 10 WITHOUT KNOCKOUTS	**K8821ALM** 10 WITHOUT KNOCKOUTS	**K8822ALM** 5 WITHOUT KNOCKOUTS	**K8822ALM** 5 WITHOUT KNOCKOUTS	**K8823ALM** 1 WITHOUT KNOCKOUTS
	K8901ALM 5 DEEP BOX 5 X 20MM KNOCKOUTS	**K8901ALM** 5 DEEP BOX 5 X 20MM KNOCKOUTS	**K8902ALM** 5 DEEP BOX 4 X 20MM, 4 X 25MM KNOCKOUTS	**K8902ALM** 5 DEEP BOX 4 X 20MM, 4 X 25MM KNOCKOUTS	
ALBANY PLUS ASPECT & EDGE FLUSH	**891ALM** 10 2 X 20MM KNOCKOUTS	**891ALM** 10 2 X 20MM KNOCKOUTS	**892ALM** 5 4 X 20MM, 4 X 25MM KNOCKOUTS	**892ALM** 5 4 X 20MM, 4 X 25MM KNOCKOUTS	**893ALM** 5 4 X 20MM, 4 X 25MM KNOCKOUTS
	821ALM 10 WITHOUT KNOCKOUTS	**821ALM** 10 WITHOUT KNOCKOUTS	**822ALM** 5 WITHOUT KNOCKOUTS	**822ALM** 5 WITHOUT KNOCKOUTS	**823ALM** 5 WITHOUT KNOCKOUTS
	GRIDS				
EDGE & ASPECT COVER PLATES INCLUDE AN INTEGRAL GRID	**K3701** 10	**K3702** 10	**K3703** 10	**K3704** 10	**K3703 X 2** 10

Grid Plus

8	9	12	18	24	Architrave
K3638WHI/GRA 1		K3639WHI 1			
K3498ALM 1	K3499ALM 1	K3502ALM 1	K3508ALM 1	K3514ALM 1	
K3438 1	K3439 1	K3442 1	K3448 1	K3454 1	K3401 1
K14348 1	K14349 1	K14352 1	K14358 1	K14354 1	K14401 1
K24348 1					
893ALM 5 4 X 20MM, 4 X 25MM KNOCKOUTS		895ALM 1 5 X 20MM, 5 X 25MM KNOCKOUTS			
823ALM 5 WITHOUT KNOCKOUTS		825ALM 1 WITHOUT KNOCKOUTS			
K8893ALM 5 4 X 20MM, 4 X 25MM KNOCKOUTS	K8895ALM 1 5 X 20MM, 5 X 25MM KNOCKOUTS	K8895ALM 1 5 X 20MM, 5 X 25MM KNOCKOUTS	K8898ALM 1 5 X 20MM, 5 X 25MM KNOCKOUTS	K8900ALM 1 6 X 20MM, 6 X 25MM KNOCKOUTS	
K8823ALM 5 WITHOUT KNOCKOUTS	K8825ALM 1 WITHOUT KNOCKOUTS	K8825ALM 1 WITHOUT KNOCKOUTS	K8826ALM 1 WITHOUT KNOCKOUTS	K8827ALM 1 WITHOUT KNOCKOUTS	
893ALM 5 4 X 20MM, 4 X 25MM KNOCKOUTS	895ALM 1 5 X 20MM, 5 X 25MM KNOCKOUTS	895ALM 1 5 X 20MM, 5 X 25MM KNOCKOUTS	898ALM 1 6X 32MM KNOCKOUTS	900ALM 1 6X 32MM KNOCKOUTS	3895ZIC 5 3 X 20MM KNOCKOUTS (FOR FLUSH MOUNTING ONLY)
823ALM 5 WITHOUT KNOCKOUTS	825ALM 1 WITHOUT KNOCKOUTS	825ALM 1 WITHOUT KNOCKOUTS			3891ZIC 5 1 GANG ARCHITRAVE BOXES FOR EDGE
K3704 X 2 10	K3703 X 3 10	K3704 X 3 10	K3706 X 3 10	K3706 X 4 10	K3708ZIC 10

HIGH POWER DIMMER

RANGE INTRODUCTION

When an installation requires the specification of a dimmer to control larger lighting loads, the MK Electric High Power Dimmer will meet your requirements, and give you the confidence that you have specified a product which comes with MK's brand standards of quality, reliability, safety and responsibility.

As with all MK products the High Power Dimmer is manufactured to ISO 9002 certification using only the most superior manufacturing techniques and raw materials. Each product undergoes 100% electrical and visual testing to ensure reliability and safety, and is guaranteed for 2 years.

The High Power Dimmer includes a host of different functions, enabling lighting scene control, stairwell lighting and push button dimmer with memory. For applications up to 3000W loads, an installation can be specified to include a Master and up to 2 Slaves.

Dimming can offer energy savings compared to powering a lamp to full brightness.

FEATURES & BENEFITS

- Up to 1000W dimming output per unit
- Up to 3000W dimming output when utilising Master and Slaves
- Provides rotary control using a 1-10V interface such as the K4499 Fluorescent Controller Module from the MK Electric Grid Plus Range
- Universal, Trailing Edge and Leading Edge Dimmers available
- Automatic load detection on Universal module
- Central on/off function
- Staircase lighting function with or without switch-off warning
- Lighting scene control with two, user adjustable, preset scene levels
- Overload and short circuit protection

HOW TO SPECIFY

A lighting control solution for dimming loads up to a maximum of 3000W with the ability to control trailing edge and leading edge load types. Where necessary, automatic load detection and lighting scene control with two user adjustable scene levels to be available. Dimming module to have stairwell lighting control with a turn off period between 1 second and 8 minutes with a 50% brightness warning function. Dimming module to be din rail mounted and provide overload and short circuit protection.

High Power Dimmer

OPERATING MODES

Function	Description
Push button dimmer with memory	Non cyclic dimming with maximum & minimum brightness limit adjustment. Soft start switch on at last dimming level.
Push button dimmer without memory	Non cyclic dimming with maximum & minimum brightness limit adjustment. Soft start switch on at maximum level.
Push button cyclic dimmer with memory	Cyclic dimming with maximum & minimum brightness limit adjustment. Soft start switch on at last dimming level.
Push button cyclic dimmer without memory	Cyclic dimming with maximum & minimum brightness limit adjustment. Soft start switch on at maximum level.
Stairwell lighting controller with turn off warning	Time Delay Switch with 50% brightness turn off warning. Adjustable time-on period between 1sec – 2.3hrs. Adjustable turn-off warning periods between 1sec – 8min.
Stairwell lighting controller without turn of warning	Time Delay Switch without turn off warning. Adjustable brightness and time-on period.
Scene Control Dimmer	Two user adjustable preset scene levels.
Rotary Dimmer using 0/1-10V control	Rotary control dimming with conventional 0/1-10V controls, (e.g. MK K4499).

PRODUCT SELECTOR

List Number	Description	230V Tungsten Filament Lamps	12V Wirewound Transformers	12V Electronic Transformers
K1400	1kW Universal Dimmer – Master/Slave	Yes 60-1000W	Yes 50-900VA	Yes 50-900VA
K1401M	1kW Leading Edge Dimmer – Master	Yes 60-1000W	Yes 50-900VA	–
K1401S	1kW Leading Edge Dimmer – Slave	Yes 60-1000W	Yes 50-900VA	–
K1402M	1kW Trailing Edge Dimmer – Master	Yes 60-1000W	–	Yes 50-900VA
K1402S	1kW Trailing Edge Dimmer – Slave	Yes 60-1000W	–	Yes 50-900VA

COMPATIBLE WIRING DEVICES

List Number	Descripton	Product Range
K4499WHI / BLK	**0-10V Fluorescent Controller One Module**	Grid Plus
K4900WHI / BLK	**10A Retractive Grid Switch**	Grid Plus

High Power Dimmer

1kW Din Rail Dimmer Modules

UNIVERSAL 1kW | LEADING EDGE 1kW | 1kW | TRAILING EDGE 1kW | 1kW

K1400

K1401M

K1401S

K1402M

K1402S

K1400 — 1
1kW UNIVERSAL DIMMER – MASTER/SLAVE

DIMENSIONS
108 x 55 x 60mm
6 DIN module
MOUNTING
Suitable for mounting onto 35mm DIN rail
TERMINALS
MAINS SUPPLY/SLAVE CONTROL
2 x 1.5mm² or 1 x 2.5mm²
T1/2/3 SWITCH CONTROL
1 x 1mm²
LOADS
Resistive, Incandescent and Mains Halogen lamps: 60-1000W
Low voltage wire-wound transformers: 50-900VA
Low voltage electronic transformers: 50-900VA
MAXIMUM CONTROL LINE LENGTH
100m
EN 60669-2-1
For use with up to 2 x K1400 units configured as slaves

K1401M — 1
1kW LEADING EDGE DIMMER – MASTER

DIMENSIONS
108 x 55 x 60mm
6 DIN module
MOUNTING
Suitable for mounting onto 35mm DIN rail
TERMINALS
MAINS SUPPLY/SLAVE CONTROL
2 x 1.5mm² or 1 x 2.5mm²
T1/2/3 SWITCH CONTROL
1 x 1mm²
LOADS
Resistive, Incandescent and Mains Halogen lamps: 60-1000W
Low voltage wire-wound transformers: 50-900VA
MAXIMUM CONTROL LINE LENGTH
100m
EN 60669-2-1
For use with up to 2 x K1401S or K1402S slaves

K1401S — 1
1kW LEADING EDGE DIMMER – SLAVE

DIMENSIONS
108 x 55 x 60mm
6 DIN module
MOUNTING
Suitable for mounting onto 35mm DIN rail
TERMINALS
MAINS SUPPLY/SLAVE CONTROL
2 x 1.5mm² or 1 x 2.5mm²
T1/2/3 SWITCH CONTROL
1 x 1mm²
LOADS
Resistive, Incandescent and Mains Halogen lamps: 60-1000W
Low voltage wire-wound transformers: 50-900VA
MAXIMUM CONTROL LINE LENGTH
100m
EN 60669-2-1
For use with K1401M or K1402M Master dimmers

K1402M — 1
1kW TRAILING EDGE DIMMER – MASTER

DIMENSIONS
108 x 55 x 60mm
6 DIN module
MOUNTING
Suitable for mounting onto 35mm DIN rail
TERMINALS
MAINS SUPPLY/SLAVE CONTROL
2 x 1.5mm² or 1 x 2.5mm²
T1/2/3 SWITCH CONTROL
1 x 1mm²
LOADS
Resistive, Incandescent and Mains Halogen lamps: 60-1000W
Low voltage electronic transformers: 50-900VA
MAXIMUM CONTROL LINE LENGTH
100m
EN 60669-2-1
For use with up to 2 x K1401S or K1402S slaves

K1402S — 1
1kW TRAILING EDGE DIMMER – SLAVE

DIMENSIONS
108 x 55 x 60mm
6 DIN module
MOUNTING
Suitable for mounting onto 35mm DIN rail
TERMINALS
MAINS SUPPLY/SLAVE CONTROL
2 x 1.5mm² or 1 x 2.5mm²
T1/2/3 SWITCH CONTROL
1 x 1mm²
LOADS
Resistive, Incandescent and Mains Halogen lamps: 60-1000W
Low voltage electronic transformers: 50-900VA
MAXIMUM CONTROL LINE LENGTH
100m
EN 60669-2-1
For use with K1401M or K1402M Master dimmers

High Powered Dimmers are Din Rail mounted, suitable for any standard BS EN 50022 35mm Din Rail, and are 6 Din Modules wide.

Boxes

Steel Boxes

25MM FLUSH

861ZIC 10
1 GANG
ONE ADJUSTABLE LUG

862ZIC 5
2 GANG
ONE ADJUSTABLE LUG

With earth terminal and adjustable lug
DIMENSIONS
1 gang: 75 x 75mm
2 gang: 75 x 135mm
FIXING CENTRES
1 gang: 60.3mm
2 gang: 120.6mm
KNOCKOUTS
1 gang: 10 x 20mm
2 gang: 12 x 20mm
BS 4662:2006

35MM FLUSH

K863 5
3 GANG
35MM DEEP

FOR 3 GANG K2737 LOGIC PLUS™ SWITCHSOCKET

Fitted with two earth terminals.
Two adjustable lugs.
DIMENSIONS
203 x 75mm
FIXING CENTRE
180.9mm
KNOCKOUTS
3 gang: 14 x 20mm, 6 x 25mm
BS 4662:2006

35MM FLUSH

866ZIC 10
1 GANG
ONE ADJUSTABLE LUG

886ZIC 5
2 GANG
ONE ADJUSTABLE LUG

DIMENSIONS
1 gang: 75 x 75mm
2 gang: 75 x 135mm
FIXING CENTRES
1 gang: 60.3mm
2 gang: 120.6mm
KNOCKOUTS:
1 gang: 7 x 20mm, 3 x 25mm
2 gang: 11 x 20mm, 4 x 25mm
BS 4662:2006

46MM 47MM FLUSH

877ZIC 10
1 GANG
46MM DEEP

878ZIC 5
2 GANG 47MM DEEP
ONE ADJUSTABLE LUG

DIMENSIONS
1 gang: 75 x 75mm
2 gang: 75 x 135mm
FIXING CENTRES
1 gang: 60.3mm
2 gang: 120.6mm
KNOCKOUTS
1 gang: 6 x 20mm, 4 x 25mm
2 gang: 9 x 20mm, 6 x 25mm
BS 4662:2006

Mounting box accessories see page 217

Flush and surface mounted metal boxes and frames, surface PVC and moulded urea boxes, frames and accessories.

All MK flush metal boxes are manufactured from superior materials and are fitted with earth terminals, an adjustable lug for out of square alignment and include more than an adequate number of knockouts.

41MM FOR USE WITH LOGIC PLUS™ SURFACE

K2211ALM 5
1 GANG
WITHOUT KNOCKOUTS

K2212ALM 5
2 GANG
WITHOUT KNOCKOUTS

K2213ALM 5
1 GANG
5 X 20MM KNOCKOUTS

K2214ALM 5
2 GANG
7 X 20MM KNOCKOUTS

All boxes are fitted with an earth terminal.
DIMENSIONS
1 gang: 86 x 86mm
2 gang: 86 x 146mm
FIXING CENTRES
1 gang: 60.3mm
2 gang: 120.6mm
BS 5733:2010

41MM SQUARE CORNERS SURFACE

2211ALM 5
1 GANG
WITHOUT KNOCKOUTS

2212ALM 5
2 GANG
WITHOUT KNOCKOUTS

2213ALM 5
1 GANG
5 X 20MM KNOCKOUTS

2214ALM 5
2 GANG
7 X 20MM KNOCKOUTS

Boxes

Steel Boxes

35MM / 47MM
FLUSH

K14101 1
35MM FOR EDGE™
COMBINATION PLATE K14100

K14102 1
47MM FOR EDGE™
COMBINATION PLATE K14100

Fitted with two earth terminals.
Two adjustable lugs.
DIMENSIONS
279.6 x 159.5mm
FIXING CENTRES
268.2mm / 87.3mm
KNOCKOUTS
35mm 18 x 20mm, 6 x 25mm
47mm 12 x 20mm, 12 x 25mm
BS 5733:2010

K14201 1
35MM FOR EDGE™ IN-LINE
COMBINATION PLATE K14200

K14202 1
47MM FOR EDGE™ IN-LINE
COMBINATION PLATE K14200

Fitted with two earth terminals.
Two adjustable lugs.
DIMENSIONS
430 x 75mm
FIXING CENTRES
417.4mm
KNOCKOUTS
35mm Middle Box: 6 x 20mm, 2 x 25mm
35mm End Boxes: 15 x 20mm, 5 x 25mm
47mm Middle Box: 4 x 20mm, 4 x 25mm
47mm End Boxes: 10 x 20mm, 10 x 25mm
BS 5733:2010

K14206 1
35MM FOR EDGE™ IN-LINE
COMBINATION PLATE K14205

K14207 1
47MM FOR EDGE™ IN-LINE
COMBINATION PLATE K14205

Fitted with two earth terminals.
Two adjustable lugs.
DIMENSIONS
392 x 75mm
FIXING CENTRES
382.5mm
KNOCKOUTS
35mm Left 2G Box: 7 x 20mm, 3 x 25mm
35mm Middle Boxes: 4 x 20mm
35mm Right Box: 6 x 20mm
47mm Left 2G Box: 4 x 20mm, 6 x 25mm
47mm Middle Boxes: 2 x 20mm, 1 x 25mm
47mm Right Box: 4 x 20mm, 1 x 25mm
BS 5733:2010

Steel Boxes

35MM / 47MM
FLUSH

47MM
FLUSH

853ZIC

857ZIC

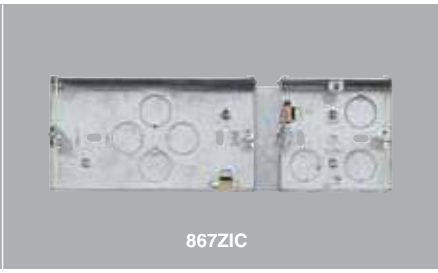
867ZIC

853ZIC 1
35MM FOR LOGIC PLUS™
4 GANG COMBINATION PLATE K2740WHI

854ZIC 1
47MM FOR LOGIC PLUS™
4 GANG COMBINATION PLATE K2740WHI

BS 5733:2010

DIMENSIONS
279.6 x 159.5mm

857ZIC 1
35MM FOR LOGIC PLUS™
2 GANG COMBINATION PLATE K2741WHI

858ZIC 1
47MM FOR LOGIC PLUS™
2 GANG COMBINATION PLATE K2741WHI
AND 4+4 MODULE COMBINATION PLATES
(EDGE™/ASPECT/ELEMENTS)

BS 5733:2010

DIMENSIONS
135 x 159.5mm

867ZIC 1
47MM BOX FOR
2+1 COMBINATION PLATE
(EDGE™)

BS EN 60670-1:2005
DIMENSIONS
220 x 75mm

Mounting box accessories see page 217

Boxes

Steel Boxes

47MM
FLUSH

868ZIC 1
47MM BOX FOR
1G+2G+1G COMBINATION PLATE
(EDGE™/ASPECT/ELEMENTS)

BS EN 60670-1:2005
DIMENSIONS
305 x 75mm

869ZIC 1
47MM BOX FOR
6+6 MODULE COMBINATION PLATE
(EDGE™/ASPECT/ELEMENTS)

BS EN 60670-1:2005
DIMENSIONS
203 x 159.5mm

47MM
FLUSH

870ZIC

870ZIC 1
47MM BOX FOR
2+1 COMBINATION PLATE
(ASPECT/ELEMENTS)

BS EN 60670-1:2005
DIMENSIONS
220x75mm

41MM
SURFACE

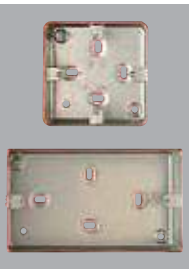

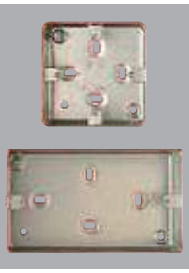

2001ALM 5
1 GANG
WITHOUT KNOCKOUTS

2002ALM 5
2 GANG
WITHOUT KNOCKOUTS

2003ALM 5
1 GANG
5 X 20MM KNOCKOUTS

2004ALM 5
2 GANG
7 X 20MM KNOCKOUTS

All boxes are fitted with an earth terminal.
DIMENSIONS
1 gang: 86 x 86mm
2 gang: 86 x 146mm
FIXING CENTRES
1 gang: 60.3mm
2 gang: 120.6mm
BS 5733:2010

Mounting box accessories see page 217

Boxes

Steel Boxes

48MM SURFACE

K5400WHI 1
2 GANG
4 X 20MM KNOCKOUTS
4X 25MM KNOCKOUTS

DIMENSIONS
86 x 146mm
FIXING CENTRES
120.6mm
BS 5733:2010

55MM FLUSH

5120ALM 1
FOR FLUSH
COOKER CONTROL UNIT
K5011WHI

Fitted with two earth terminals.
DIMENSIONS
152 x 140 x 55mm
KNOCKOUTS
5 x 25mm.
Two in each of the top & bottom, one in the back.
BS 4177:1992

65MM FLUSH

5268ALM 1
FOR 32 AMP
TP & N SWITCHES 5114WHI

Fitted with 2 earth terminals
DIMENSIONS
178 x 114 x 65mm
KNOCKOUTS
5 x 25mm.
Two in each of the top and bottom, one in the back.
BS 5733:2010

40MM SURFACE

K829ALM 5
1 GANG
WITHOUT KNOCKOUTS

K830ALM 5
2 GANG
WITHOUT KNOCKOUTS

K899ALM 10
1 GANG
5 X 20MM KNOCKOUTS

K897ALM 5
2 GANG
8 X 20MM KNOCKOUTS

Spares or replacements for the surface Metalclad Plus range.
All boxes are fitted with an earth terminal.
BS 5733:2010

ARCHITRAVE FLUSH

3921ZIC 10
1 GANG

DIMENSIONS
1 gang: 75 x 27 x 27mm
FIXING CENTRES
1 gang: 60.3mm
KNOCKOUTS
1 gang: 3 x 16mm
BS 4662:2006

DUAL FLUSH

887ZIC 5
DUAL BOX

888ZIC 10
DIVIDING SCREEN
FOR DUAL BOX

Dual box 887ZIC will accept any two flush accessories with 86mm square plates and two M3.5 fixing holes on 60.3mm centres.
Fitted with 2 earth terminals.
DIMENSIONS
75 x 161 x 35mm
KNOCKOUTS
2 gang:10 x 20mm, 4 x 25mm
BS 4662:2006

Metal Frames For Panel Mounting

K2200 10
1 GANG

K2202 5
2 GANG

FIXING CENTRES
1 gang: 60.3mm
2 gang: 120.6mm
BS 5733:2010

Blank Plates

METALCLAD PLUS™

K3390ALM 5
FOR 1 GANG
SURFACE BOXES
K899 & K829

K3369ALM 5
FOR 2 GANG
SURFACE BOXES
K830 & K897

DIMENSIONS
K3390: 86 x 86mm
K3369: 86 x 147mm
FIXING CENTRES
K3390: 60.3mm
K3369: 120.6mm
BS 5733:2010

METALCLAD

3390ALM 10
FOR 1 GANG SURFACE
BOXES 899 & 829

3370ALM 10
FOR 1 GANG SURFACE
BOXES 891 & 821

3369ALM 5
FOR 2 GANG SURFACE
BOXES 892 & 822

DIMENSIONS
3390: 81 x 81mm
3370: 76 x 76mm
3369: 76 x 136mm
FIXING CENTRES
1 gang: 60.3mm
2 gang: 120.6mm
BS 5733:2010

Mounting box accessories see page 217

Boxes

PVC Boxes

19MM
SURFACE

32MM
SURFACE

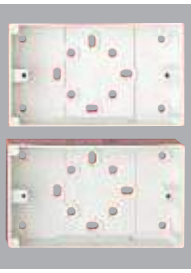

2120WHI 10
FOR 1, 2 AND 3 GANG PLATESWITCHES

With earth terminal
DIMENSIONS
87 x 87mm
FIXING CENTRES
60.3mm
Knockouts 'Cut-out' provided in top and bottom for 16mm oval PVC conduit. 20mm round 'push-out' type knockout in base for cable entry. Fixing holes are also provided for mounting to wall or over BS 4568-2 small circular boxes.
BS 5733:2010

2180WHI 10
1 GANG

2181WHI 10
1 GANG

DIMENSIONS
87 x 87mm
FIXING CENTRES
60.3mm
KNOCKOUTS
2180: One 'push-out' for 20mm oval conduit in top, one 'cut-out' for 20mm or 25mm oval conduit and one 20mm round 'push-out' in the base.
2181: One 'push-out' for 20mm round conduit in top and one 20mm round 'push-out' in base.
BS 5733:2010

2182WHI 5
2 GANG

2183WHI 5
2 GANG

DIMENSIONS
87 x 148mm
FIXING CENTRES
120.6mm
KNOCKOUTS
2182: Two 'push-outs' for 20mm oval conduit in top, two 'cut-outs' for 20mm or 25mm oval conduit and one 20mm round 'push-out' in base
2183: One 'push-out' for 20mm round conduit in top and one 20mm round 'push-out' in base.
BS 5733:2010

K2181WHI 10
FOR 1 GANG LOGIC PLUS™ POWER ACCESSORIES

K2183WHI 5
FOR 2 GANG LOGIC PLUS™ POWER ACCESSORIES

K2185WHI 5
FOR 3 GANG LOGIC PLUS™ POWER ACCESSORIES

KNOCKOUTS
K2181: One 'cut-out' for 20mm round conduit in top face, one 'cut-out' for 20mm or 25mm oval conduit in lower face and one 20mm round 'push-out' in the base.
K2183 and K2185: One 'cut-out' for 20mm round conduit in top face, two 'cut-outs' for 20mm or 25mm oval conduit in lower face and one 20mm round 'push-out' in the base. Both boxes are suitable for fitting over 1 gang and 2 gang BS 4662 flush steel boxes respectively.

DIMENSIONS
1 gang: 87 x 87mm
2 gang: 87 x 148mm
3 gang: 87 x 208mm
FIXING CENTRES
1 gang: 60.3mm
2 gang: 120.6mm
3 gang: 180.9mm
BS 4662:2006 where applicable

Moulded Boxes

ARCHITRAVE
SURFACE

16MM
SURFACE

30MM
SURFACE

K2151WHI 10
1 GANG
ARCHITRAVE BOX

K2152WHI 5
2 GANG
ARCHITRAVE BOX

Earth terminal fitted in base of boxes.
DIMENSIONS
1 gang: 87 x 33 x 16mm
2 gang: 148 x 33 x 16mm
FIXING CENTRES
1 gang: 60.3mm
2 gang: 120.6mm
BS 5733:2010

K2160WHI 10
FOR 1, 2 AND 3 GANG LOGIC PLUS™ PLATESWITCHES

K2161WHI 5
FOR 4 AND 6 GANG LOGIC PLUS™ PLATESWITCHES

Earth terminal fitted in base of boxes.
Knockouts provided in sides and bases.
DIMENSIONS
1 gang: 87 x 87mm
2 gang: 87 x 148mm
FIXING CENTRES
1 gang: 60.3mm
2 gang: 120.6mm
BS 5733:2010

K2140WHI 10
FOR 1 GANG LOGIC PLUS™ POWER ACCESSORIES

K2142WHI 5
FOR 2 GANG LOGIC PLUS™ POWER ACCESSORIES

Knockouts in base and sides for cable entry
K2142 and K2153 are suitable for fitting over 1 gang and 2 gang BS 4662 flush steel boxes respectively

K2153WHI 5
FOR 3 GANG LOGIC PLUS™ POWER ACCESSORIES

DIMENSIONS
1 gang: 87 x 87mm
2 gang: 87 x 148mm
3 gang: 87 x 208mm
FIXING CENTRES
1 gang: 60.3mm
2 gang: 120.6mm
3 gang: 180.9mm
BS 5733:2010

Boxes

Moulded Boxes

32MM SURFACE

2140WHI 10
FOR 1 GANG
POWER ACCESSORIES
SQUARE CORNERS

Knockouts are provided in base and sides for cable entry
DIMENSIONS
1 gang: 87 x 87mm
2 gang: 87 x 148mm
FIXING CENTRES
1 gang: 60.3mm
2 gang: 120.6mm
BS 5733:2010

44MM SURFACE

2031WHI 10
FOR 1 GANG
POWER ACCESSORIES
SQUARE CORNERS

Knockouts in base and sides for cable entry.
DIMENSIONS
87 x 87mm
FIXING CENTRES
60.3mm
BS 5733:2010

DRY LINING 35MM FLUSH

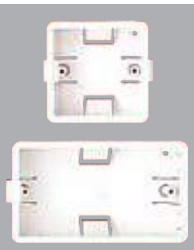

QFB1WHI 20
1 GANG
QFB2WHI 10
2 GANG

All round flange for a flush fit. One piece moulded lug automatically snaps into place. No rear projections. Clamp device on cable entry. Will accommodate partition thickness between 6mm and 16mm. Earth terminal facility.
BS 4662:2006

QFB/IG1 20
1 GANG WITH
INTUMESCENT GASKET
QFB/IG2 10
2 GANG WITH
INTUMESCENT GASKET

QFB/IG1 & QFB/IG2
Pre-fitted with intumescent gaskets to give fire protection, in accordance with BS 476-2:1987. In a fire situation, a chemical reaction will occur with the intumescent material. The void behind the wiring device will be filled, providing protection against the passage of fire.
BS 4662:2006

MI CABLE BOXES 37MM SURFACE

K2131WHI 5
1 GANG
10 CLAMPS
K2132WHI 5
2 GANG
12 CLAMPS

Clamps accept 20mm sealing pots.
DIMENSIONS
1 gang: 92 x 92mm
2 gang: 92 x 152mm
FIXING CENTRES
1 gang: 60.3mm
2 gang: 120.6mm
BS 5733:2010

DUAL BOX 38MM SURFACE

K2025WHI 5
FOR MOUNTING
TWO 1 GANG
LOGIC PLUS™
ACCESSORIES

This box has two slots in base with 60.3mm and 120.6 fixing centres for fitting over BS 4226 flush boxes. Knockouts provided for cable entry.
Includes integral dividing fillet.
DIMENSIONS
86 x 172 mm
BS 5733:2010

40MM SURFACE

K2031WHI 10
FOR 1 GANG
LOGIC PLUS™
POWER ACCESSORIES
K2172WHI 5
FOR 2 GANG
LOGIC PLUS™ 50 AMP
DP SWITCHES

Knockouts provided in sides and base.
K2172: Earth terminal fitted in base of box.
DIMENSIONS
K2031: 87 x 87mm
K2172: 87 x 148mm
FIXING CENTRES
K2031: 60.3mm
K2172: 120.6mm
BS 5733:2010

FLANGE BOXES 45MM FLUSH

K2061WHI 5
1 GANG
K2062WHI 5
2 GANG

DIMENSIONS
K2061: 88 x 88mm
K2062: 88 x 148mm
FIXING CENTRES
K2061: 60.3mm
K2062: 120.6mm
BS 5733:2010

Mounting Pattresses

SURFACE

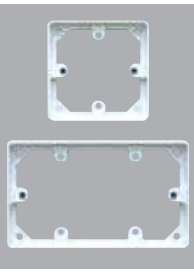

K2134WHI 10
1 GANG 20MM DEEP
FOR LOGIC PLUS™
ACCESSORIES
K2133WHI 10
2 GANG 20MM DEEP
FOR LOGIC PLUS™
ACCESSORIES

FIXING CENTRES
1 gang: 60.3mm
2 gang: 120.6mm
BS 5733:2010

LOGIC PLUS™ ACCESSORIES/BOX COMPATIBILITY CHART

SURFACE MOUNTING

	DEPTH: (MM)								
MOULDED	16 MOULDED	30 MOULDED	32* PVC	38 MOULDED	40 MOULDED	41 STEEL	41* STEEL	48* STEEL	55
1 GANG SOCKETS (13A)		K2140	K2181	K2025	K2031	K2211ALM	K2213ALM		
2 GANG SOCKETS		K2142	K2183		K2172	K2212ALM	K2214ALM	K5400	
3 GANG SOCKETS		K2153	K2185						
RCD SOCKETS					K2172	K2212ALM	K2214ALM	K5400	
FILTERED SOCKETS					K2172	K2212ALM	K2214ALM	K5400	
CONNECTION UNITS		K2140	K2181	K2025	K2031	K2211ALM	K2213ALM		
20A DP SWITCHES		K2140	K2181	K2025	K2031	K2211ALM	K2213ALM		
K5105 32A DP SWITCH		K2140	K2181	K2025	K2031	K2211ALM	K2213ALM		
K5205, K5215 (CK & SH)					K2172	K2212ALM	K2214ALM		
K5230								K5400	
K5060, K5061					K2212	K2214ALM		K5400	
K5040, K5041				■					
K5001									■
K700		K2140	K2181	K2025		K2211ALM	K2213ALM		
K701					K2172				
1, 2 & 3 GANG SWITCHES	K2160	K2140	K2181	K2025	K2031	K2211ALM	K2213ALM		
4 & 6 GANG SWITCHES	K2161	K2142	K2183		K2172	K2212ALM	K2214ALM	K5400	
1 GANG ARCHITRAVE SWITCH	K2151								
2 GANG ARCHITRAVE SWITCH	K2152								
DIMMERS USING PATTRESS									
K1501, K1511, K1531, K1532	K2160								
K1521, K1534, K1533, K1535	K2160								
DIMMERS NOT USING PATTRESS									
K1501, K1511, K1531, K1532		K2140	K2181	K2025	K2031				
K1521, K1534, K1533, K1535		K2140	K2181	K2025		K2211ALM	K2213ALM		
DATA/TELECOM PLATES	K2160	K2140	K2181	K2025		K2211ALM	K2213ALM		

FLUSH MOUNTING

	DEPTH: (MM)						
(STEEL & DRY LINING)	16	25*	27*	35*	45	47*	55
1 GANG SOCKETS (13A)		861ZIC		QFB/IG1	K2061	877ZIC	
2 GANG SOCKETS		862ZIC		QFB/IG2	K2062	878ZIC	
3 GANG SOCKETS		K863					
RCD SOCKETS				886ZIC	K2062	878ZIC	
FILTERED SOCKETS				886ZIC	K2062	878ZIC	
CONNECTION UNITS				866ZIC	K2061	877ZIC	
20A DP SWITCHES				866ZIC	K2061	877ZIC	
K5105 32ADP SWITCH				866ZIC		877ZIC	
K5205, K5215 (CK & SH)				886ZIC	K2062	878ZIC	
K5012							5120ALM
K5045					K2061	877ZIC	
K5060, K5061				886ZIC	K2061	878ZIC	
K5011							5120ALM
K700		861ZIC		866ZIC	K2061	877ZIC	
K701						878ZIC	
1, 2 & 3 GANG SWITCHES		861ZIC		866ZIC	K2061	877ZIC	
4 & 6 GANG SWITCHES		862ZIC		886ZIC	K2062		
1 GANG ARCHITRAVE SWITCH			3921ZIC				
DIMMERS USING PATTRESS							
K1501, K1511, K1531, K1532							
K1521, K1534, K1533, K1535						878ZIC	
DIMMERS NOT USING PATTRESS							
K1501, K1511, K1531, K1532		861ZIC		866ZIC	K2061	877ZIC	
K1521, K1534, K1533, K1535		861ZIC			K2062	877ZIC	
DATA/TELECOM PLATES		861ZIC		866ZIC	K2061	877ZIC	

■ BOX SUPPLIED WITH ACCESSORY ■ DEPENDENT UPON MODULES USED * WITH CONDUIT ENTRY KNOCKOUTS

NOTE: THE SIZE OF THE CABLE AND NATURE OF INSTALLATION SHOULD BE TAKEN INTO CONSIDERATION WHEN CHOOSING BOX DEPTH.

Ancillary Products

Switchsocket Outlets

MINI LOGIC
SURFACE
13 AMP

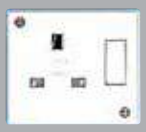

2959WHI

2949WHI

PANEL MOUNTING
13 AMP

2531WHI

2532WHI

Socket Outlets

PANEL MOUNTING
13 AMP

734WHI

735WHI

1232D1

2959WHI 10
1 GANG SP

2949WHI 5
2 GANG SP

These products are supplied with a mounting box.
Mounting boxes have knockouts for cables.

DIMENSIONS
1 gang: 74 x 64 x 46mm
2 gang: 133 x 64 x 46mm
BS 1363-2:1995

2531WHI 5
1 GANG SP
SWITCHSOCKET

2532WHI 5
2 GANG SP
SWITCHSOCKET

Supplied with M3.5 threaded eyelets and fixing screws.
These products have side entry terminals.
BS 1363-2:1995

734WHI 10
1 GANG
CRUCIFORM SOCKET

735WHI 10
1 GANG
CIRCULAR SOCKET

1232D1 10
1 GANG
NON STANDARD

Supplied with M3.5 threaded eyelets and fixing screws.
734 and 735 have side entry terminals.
They are also available with rear entry terminals.
Use suffix D5WHI when ordering.
1232D1 has rear entry terminals and is provided with facilities for 'clean earth' connection and are suitable for non-standard plugs with 'T' shaped earth pin.

734, 735
BS 1363-2:1995
1232D1
BS 1363-2:1995 where relevant.

Ancillary Products

Triple Pole & Neutral Switches

METAL FLUSH
32 AMP

5114WHI

SURFACE

5115WHI

5116WHI

Energy Saving Switch

FLUSH

4724WHI

4700WHI

Clock Connectors

FUSED

995WHI

5114WHI 1
FLUSH MOUNTED
WITH NEON

5115WHI 1
SURFACE MOUNTED
WITH NEON

5116WHI 1
SURFACE MOUNTED
WITH NEON

MOUNTING BOX
FLUSH
5268ALM
These products have a utilisation category of AC22 – rated operational current (Ie),32A – rated operational voltage (Ue), 440V. They are suitable for switching mixed resistive and inductive loads including moderate overloads.
5114 is also available in Albany Plus finishes (page 178).
All switches may be locked in the 'ON' or 'OFF' position with 1 the use of the MK Padlock K2000.
5116 is available in Metalclad Plus version (page 230).
TERMINAL CAPACITY
16mm² conductors. On surface mounted versions the earth terminal is fitted on base of box.
DIMENSIONS
5114 203 x 140mm
5115 182 x 118 x 82mm
5116 137 x 76 x 53mm
KNOCKOUTS
5115 5 x 25mm. Two top and bottom, one in back
5116 6 x 20mm. Wiring space limits recommended cable size to 6mm².
BS EN 60947-3:1999

4724WHI 10
20A DP SWITCH
WITH KEYTAG

4700WHI 10
SPARE KEYTAG

MOUNTING BOXES
FLUSH
866ZIC
SURFACE
2160WHI
The MK Energy Saving Switch provides a simple and effective way of reducing electricity consumption while increasing safety in buildings where appliances may be left on in unoccupied rooms.
By removing the keytag the power is switched off eliminating the need to switch off each individual light or appliance. A neon locator light on the switch unit makes it easy to locate when entering darkened rooms.
DIMENSIONS
86 x 86mm
FIXING CENTRES
60.3mm
BS EN 60669-1:1999

995WHI 10
FLUSH MOUNTING

Fitted with 2 amp fuse-link to BS 1362.Terminals will accommodate 2.5mm² conductors.
995WHI
Includes earthing facilities and is suitable for mounting in BS 4662 boxes. The removable fuse carrier is fully recessed and total projection of the plate is only 4.2mm. A knockout on the underside is provided so an M3.5 screw or hook engages with a tapped lug on the box (for hanging a wall clock).
DIMENSIONS
995WHI 86 x 86mm
FIXING CENTRES
995WHI 60.3mm
BS 5733:2010

Ancillary Products

Junction Boxes

1131WHI

1132WHI

1133WHI

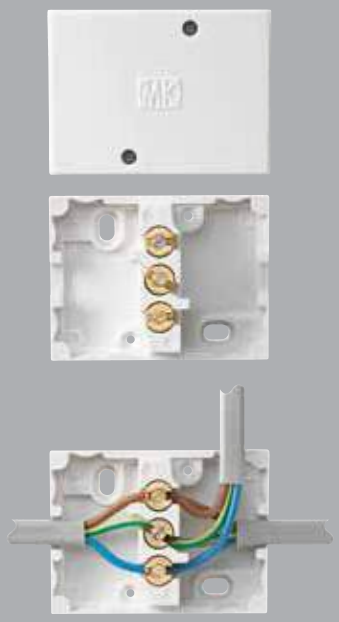

1130WHI

1131WHI — 10
4 TERMINAL BLOCKS
10A

DIMENSIONS
OVERALL DIAMETER
81.5mm
DEPTH WITH COVER
22.5mm
TERMINAL CAPACITY
1131 6 x 1.5mm² conductors
1132 4 x 4mm² conductors
BS EN 60670-22 (where applicable)

1132WHI — 10
3 TERMINAL BLOCKS
30A

DIMENSIONS
OVERALL DIAMETER
81.5mm
DEPTH WITH COVER
22.5mm
TERMINAL CAPACITY
1131 6 x 1.5mm² conductors
1132 4 x 4mm² conductors
BS EN 60670-22 (where applicable)

1133WHI — 10
3 TERMINAL BLOCKS
30A

DIMENSIONS
OVERALL DIAMETER
95mm
DEPTH WITH COVER
25mm
TERMINAL CAPACITY
Each terminal block accepts
up to 4 x 6mm² conductors
BS EN 60670-22 (where applicable)

1130WHI — 10
3 TERMINAL
30A

Particularly suitable for taking spurs off un-cut ring circuit conductors.
DIMENSIONS
86 x 64 x 31mm
TERMINAL CAPACITY
Each terminal accepts
3 x 4mm² conductors.
CABLE ENTRIES
Two opposite 'through' entries are 'open'.
Eight further knockouts are provided.
BS EN 60670-22 (where applicable)

Ancillary Products

Terminal Blocks

Service Connector Boxes

Accessories For Boxes

Neon Lamp Assemblies

913WHI

914WHI

1100BLK

1101BLK

3714

3710

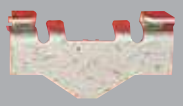

800ZIC

3840ZIC

5144SS000T9

17270SS

913WHI 5
3 WAY

914WHI 5
4 WAY

TERMINAL CAPACITY
913
Each terminal accepts up to 3 x 2.5mm² (solid conductors) or 3 x 4mm² (stranded conductors).
914
Each terminal accepts up to 4 x 1.5mm² conductors.
FIXING CENTRES
60.3mm for mounting on 'spare' lugs of 4 or 6 lug BS 4662 boxes.

1100BLK 10
5 WAY DOUBLE POLE
100A

1101BLK 10
5 WAY SINGLE POLE
100A

TERMINAL CAPACITY
All 35m²
Where it is necessary to take the outer sheath of a double insulated cable into the box, the cable sizes are restricted to 16mm².
DIMENSIONS (OVERALL)
1100BLK 110 x 70 x 60mm
1101BLK 65 x 50 x 38mm
BS 7657:2010

3714 100
BRASS EARTH TERMINAL
WITH BRACKET

K3716 100
BRASS EARTH TERMINAL

3710 100
EXTENSION STUD
M3.5
ZINC-PLATED STEEL
OVERALL LENGTH 34MM

800ZIC 20
BOX FIXING FLANGE
USE TWO TO MOUNT ANY FLUSH
MK BOX IN A DRY-PARTITION WALL

3840ZIC 10
CONVERSION BRACKET
COMPLETE WITH EARTH TERMINAL.
CONVERTS 25MM DEEP FLUSH SWITCH
BOXES WITH 42MM FIXING CENTRES TO
ACCOMMODATE PLATESWITCHES WITH
60.3MM FIXING CENTRES

5144SS000T9 1
LAMP LEAD AND
RESISTOR ASSEMBLY
FOR CEILING SWITCH BLOCKS
AND 32A DP SWITCHES

17270SS 10
LAMP LEAD AND
RESISTOR ASSEMBLY
TAG ENDED NEON FOR USE WITH
45A, 50A SWITCHES AND COOKER
CONTROL UNITS

7179PS 10
LAMP LEAD AND RESISTOR
ASSEMBLY, MALE CONNECTOR
FOR SWITCHSOCKETS

Ancillary Products

Fuse-Links

BS 646:1958
250V 50-60 HZ

K600

K630

K602

K601

BS HD 60269-3:2010
250V 50-60HZ

K606

K603

K605

K604

BS 1362:1973
250V 50-60HZ

K610

K612

K609

K608

K607

Extra Screws

USE WITH
EDGE™/ASPECT™
FRONTPLATES

K600 10
5A RED

K630 10
3A BLACK

K602 10
2A YELLOW

K601 10
1A GREEN

DIMENSIONS
OVERALL LENGTH
19.1mm +0.8mm -0.4mm
END-CAP DIAMETER
5.3mm +0.1mm -0.1mm
END-CAP LENGTH
4.0mm +0.8mm -0.8mm

K606 10
32A RED

K603 10
20A YELLOW

K605 10
16A BLUE

K604 10
5A WHITE

K606
OVERALL LENGTH
29.0mm +0.4mm -0.4mm
END-CAP DIAMETER
12.7mm +0.1mm -0.1mm
END-CAP LENGTH
8.0mm +0.5mm -0.5mm
K604
OVERALL LENGTH
23.0mm +0.0mm -0.8mm
END-CAP DIAMETER
6.35mm +0.1mm -0.1mm
END-CAP LENGTH
4.8mm +0.5mm -0.5mm
K603, K605
OVERALL LENGTH
26.0mm +0.2mm -0.6mm
END-CAP DIAMETER
10.32mm +0.1mm-0.1mm
END CAP LENGTH
6.4mm +0.5mm -0.5mm

K610 10
13A BROWN*

K612 10
3A RED*

K609 10
10A BLACK #

K608 10
5A BLACK#

K607 10
2A BLACK#

* These ratings are for use with plugs complying with BS 1363, fused connections units and similar accessories.

These ratings are for use with fused connection units and similar accessories.

DIMENSIONS
OVERALL LENGTH
25.4mm +0.8mm -0.4mm
END-CAP DIAMETER
6.3mm +0.2mm -0.5mm
END-CAP LENGTH
5.5mm +0.8mm -0.8mm

43066SSABST9 100
SCREW M3.5 22MM
(2 SCREWS/PKT)

43066SSNIPT9 100
SCREW M3.5 22MM
(2 SCREWS/PKT)

43066SSDBZT9 100
SCREW M3.5 22MM
(2 SCREWS/PKT)

43066SSLBKT9 100
SCREW M3.5 22MM
(2 SCREWS/PKT)

43066SSLIVT9 100
SCREW M3.5 22MM
(2 SCREWS/PKT)

43066SSPBRT9 100
SCREW M3.5 22MM
(2 SCREWS/PKT)

43066SSBRST9 100
SCREW M3.5 22MM
(2 SCREWS/PKT)

43066SSWHIT9 100
SCREW M3.5 22MM
(2 SCREWS/PKT)

43066SSTCOT9 100
SCREW M3.5 22MM
(2 SCREWS/PKT)

43066SSTIRT9 100
SCREW M3.5 22MM
(2 SCREWS/PKT)

4352SSABST9 100
SCREW M3.5 28MM
(2 SCREWS/PKT)

4352SSDBZT9 100
SCREW M3.5 28MM
(2 SCREWS/PKT)

4352SSLBKT9 100
SCREW M3.5 28MM
(2 SCREWS/PKT)

4352SSLIVT9 100
SCREW M3.5 28MM
(2 SCREWS/PKT)

4352SSBRST9 100
SCREW M3.5 28MM
(2 SCREWS/PKT)

4352SSTCOT9 100
SCREW M3.5 28MM
(2 SCREWS/PKT)

4352SSTIRT9 100
SCREW M3.5 28MM
(2 SCREWS/PKT)

4352SSWHIT9 100
SCREW M3.5 28MM
(2 SCREWS/PKT)

4352SSNIPT9 100
SCREW M3.5 28MM
(2 SCREWS/PKT)

4352SSPBRT9 100
SCREW M3.5 28MM
(2 SCREWS/PKT)

K14S42506ABST9 100
SCREW M3.5 47MM
(2 SCREWS/PKT)

K14S42506DBZT9 100
SCREW M3.5 47MM
(2 SCREWS/PKT)

K14S42506LBKT9 100
SCREW M3.5 47MM
(2 SCREWS/PKT)

K14S42506BRST9 100
SCREW M3.5 47MM
(2 SCREWS/PKT)

K14S42506TCOT9 100
SCREW M3.5 47MM
(2 SCREWS/PKT)

K14S42506TIRT9 100
SCREW M3.5 47MM
(2 SCREWS/PKT)

K14S42506NIPT9 100
SCREW M3.5 47MM
(2 SCREWS/PKT)

K14S42506LIVT9 100
SCREW M3.5 47MM
(2 SCREWS/PKT)

K14S42506PBRT9 100
SCREW M3.5 47MM
(2 SCREWS/PKT)

K14S42506WHIT9 100
SCREW M3.5 47MM
(2 SCREWS/PKT)

BRS finish for use with SAG accessories.
NIP finish for use with BSS, BRC, ALM, PCR/POC and Logic Plus™ accessories.
Tamperproof screws include one key per pack.

Ancillary Products

Replacement Components

USE WITH
EDGE™/ASPECT™
GRID PLUS™
FRONTPLATES

48370SSABST9 100
SCREW M3.0 12MM
(2 SCREWS/PKT)

48370SSDBZT9 100
SCREW M3.0 12MM
(2 SCREWS/PKT)

48370SSLBKT9 100
SCREW M3.0 12MM
(2 SCREWS/PKT)

48370SSLIVT9 100
SCREW M3.0 12MM
(2 SCREWS/PKT)

48370SSBRST9 100
SCREW M3.0 12MM
(2 SCREWS/PKT)

48370SSTCOT9 100
SCREW M3.0 12MM
(2 SCREWS/PKT)

48370SSTIRT9 100
SCREW M3.0 12MM
(2 SCREWS/PKT)

48370SSPBRT9 100
SCREW M3.0 12MM
(2 SCREWS/PKT)

48370SSNIPT9 100
SCREW M3.0 12MM
(2 SCREWS/PKT)

48370SSWHIT9 100
SCREW M3.0 12MM
(2 SCREWS/PKT)

BRS finish for use with SAG accessories.
NIP finish for use with BSS, BRC, ALM, PCR/POC and Logic Plus™ accessories.
Tamperproof screws include one key per pack.

USE WITH
LOGIC PLUS™/ALBANY PLUS™
GRID PLUS™
FRONTPLATES

11130BRSMA 100
SCREW M3.0 12MM

11130NIPMA 100
SCREW M3.0 12MM

11430BRSMA 100
SCREW M3.0 12MM
TAMPERPROOF

11430NIPMA 100
SCREW M3.0 12MM
TAMPERPROOF

BRS finish for use with SAG accessories.
NIP finish for use with BSS, BRC, ALM, PCR/POC and Logic Plus™ accessories.
Tamperproof screws include one key per pack.

USE WITH
LOGIC PLUS™/ALBANY PLUS™
FRONTPLATES

11135NIPMA 100
SCREW M3.5 14MM

11135BRSMA 100
SCREW M3.5 14MM

11135NIPMB 100
SCREW M3.5 22MM

11135BRSMB 100
SCREW M3.5 22MM

11135NIPMN 100
SCREW M3.5 25MM

11135BRSMN 100
SCREW M3.5 25MM

11135BRSME 100
SCREW M3.5 32MM

11135NIPME 100
SCREW M3.5 32MM

11135BRSMG 100
SCREW M3.5 48MM

11135NIPMG 100
SCREW M3.5 48MM

11435BRSMJ 100
SCREW M3.5 29MM
TAMPERPROOF

11435NIPMJ 100
SCREW M3.5 29MM
TAMPERPROOF

11435BRSME 100
SCREW M3.5 35MM
TAMPERPROOF

11435NIPME 100
SCREW M3.5 35MM
TAMPERPROOF

BRS finish for use with SAG accessories.
NIP finish for use with BSS, BRC, ALM, PCR/POC and Logic Plus™ accessories.
Tamperproof screws include one key per pack.

3405ZIC

645NIP 100
SECRET SCREW
FOR USE WITH 646, 655 & 647

644ZIC 10
KEY FOR 645NIP

3400ZIC 10
TAMPERPROOF KEY

3405ZIC 10
DUAL USE KEY FOR TAMPER PROOF KEY SWITCH AND SECRET SCREW CONNECTION UNITS

METALCLAD PLUS™

RANGE INTRODUCTION

All MK products are made to stand up to the wear and tear of everyday use, but in some areas you need them to be even tougher. That's why the Metalclad Plus™ range of surface mounted accessories is ideal for factories, workshops, garages and sheds.

Made from heavy gauge steel they're tough and impact resistant and they look good too. There is a wide selection of surface mounted products in the range including switchsockets with outboard rockers and light switches with wide rockers, both very useful when wearing gloves. An RCD protected socket is also available which is essential when operating power tools.

Echo™ is an innovative range of entirely wireless, batteryless and self powered switches and in finishes to complement the Metalclad Plus™ range. Please see page 21 for details.

HOW TO SPECIFY

A metal, surface and flush mounting range of wiring devices. Frontplates to have a maximum 9mm profile and subtle 7mm radius rounded corners. Cable connections must be upward facing with easy to identify white markings on a dark background, grouped in a straight line with captive terminal screws for ease of installation. All sockets to have a 3 pin operated shutter safety mechanism and double pole switching, with the contacts designed such that the neutral makes before and breaks after the live pole for improved safety. Switches to have a minimum 3mm contact gap with a positive 'click' to denote successful operation.

FEATURES & BENEFITS

TOUGH AND IMPACT RESISTANT

Metalclad Plus™ is ideal for factories, workshops, garages and sheds. White Metalclad Plus™ is ideal for Schools and Sports Halls.

COMPREHENSIVE RANGE

Suits all your needs where hard wearing performance is required.

FRONTPLATES HAVE SMOOTHLY CHAMFERED EDGES

Fits flush with the backbox providing a neat finish.

TOTAL SAFETY

3-pin operated "child resistant shutter system", which is designed to inhibit access to the electricity supply, unless all 3 pins of a standard British 13 Amp plug are in position.

All products are Surface mounted (supplied with box) with exception of White and D5 variants. Boxes can be obtained separately if needed.
See page 211.

Metalclad Plus™

METALLIC POWDER PAINT
Finish is corrosion and scratch resistant

HIGHLY IMPACT RESISTANT

SPECIFICALLY DESIGNED BACK BOXES
Ensure neat and exact fit

DOUBLE POLE SWITCHING

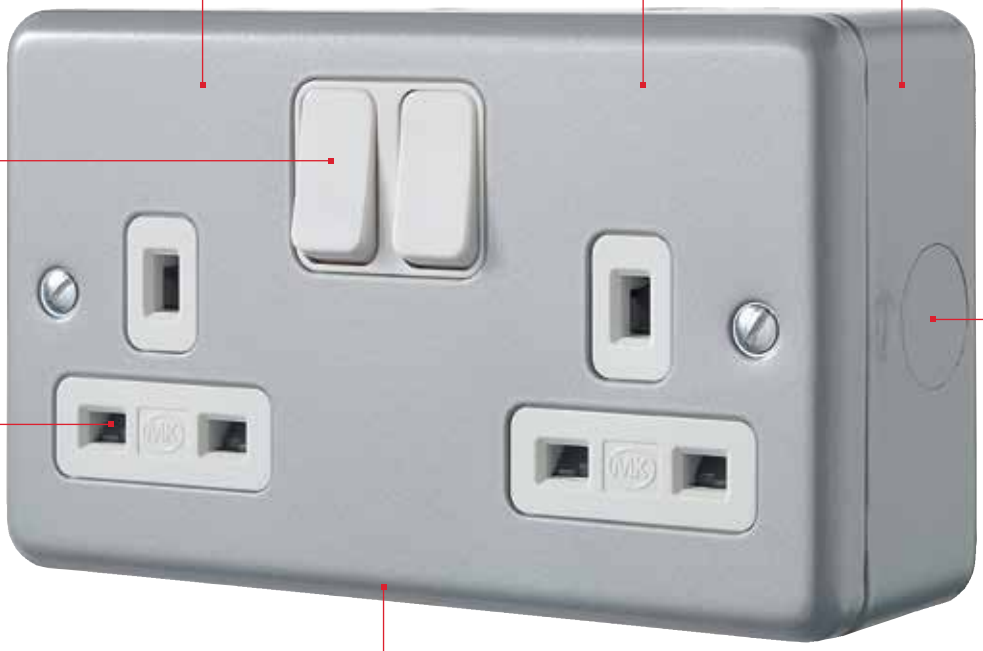

BOXES AVAILABLE WITH OR WITHOUT KNOCKOUTS

3-PIN "CHILD RESISTANT SHUTTER SYSTEM"
Designed to inhibit access to the electricity supply, unless all 3 pins of a standard British 13A plug are in position

STYLISH CURVED DESIGN

Terminal screws are backed out and captive terminals are upwards facing to make installation easier.

Funnel entrance to terminals enables positive cable connection.

Outboard rocker sockets are ideal for gloved hands.

Clear terminal markings for easy identification.

Metalclad Plus™

Switchsocket Outlets

DP
13 AMP

K2977ALM

K2977D6ALM

K2946ALM

K2946D6ALM

K3077WHI

K3046WHI

2 GANG DP
WITH 2 X USB
CHARGING PORTS
DUAL EARTH
13 AMP

K2943D5ALM

K2943D5WHI

WITH OUTBOARD
ROCKERS
13 AMP

K2945ALM

K2945D6ALM

K3045WHI

WITH NEONS
13 AMP

K2477ALM

K2477D6ALM

K2446ALM

K2446D6ALM

1 GANG DP

K2435ALM

K2977ALM 5
1 GANG DP WITH DUAL EARTH TERMINALS

K2977D5ALM 1
1 GANG DP WITH DUAL EARTH TERMINALS WITHOUT BOX

K2977D6ALM 1
1 GANG DP WITH RED ROCKER AND DUAL EARTH TERMINALS

K2946ALM 5
2 GANG DP

K2946D5ALM 1
2 GANG DP WITHOUT BOX

K2946D6ALM 1
2 GANG DP WITH RED ROCKERS

Earth terminal fitted in boxes.
DIMENSIONS
1 gang 86 x 86 x 51mm
2 gang 86 x 146 x 51mm
KNOCKOUTS
1 gang 6 x 20mm – Two in one side and one in each of the other three sides. One in base.
2 gang 8 x 20mm – Three in top two in bottom sides and one in each end. One in base.
SPARE BOXES
1 gang K829ALM* K899ALM
2 gang K830ALM* K897ALM

K3077WHI 10
1 GANG DP WITHOUT BOX

K3046WHI 5
2 GANG DP WITHOUT BOX

K2943D5ALM 1
2 GANG DP WITH DUAL EARTH TERMINALS WITH INTEGRAL USB CHARGING WITHOUT BOX

K2943D5WHI 1
2 GANG DP WITH DUAL EARTH TERMINALS WITH INTEGRAL USB CHARGING WITHOUT BOX

Features 2 USB charging sockets, each capable of supporting 2A charge (total of 2A)
BS5733: 2010
MOUNTING BOX
K897ALM
K897WHI

(*without side knockouts)
All boxes have a base knockout.
BOXES
BS 5733:2010
SOCKET
BS 1363-2:1995
HIGH INTEGRITY EARTHING
One gang switchsockets, two gang outboard switchsockets, two gang integrated USB switchsockets and two gang unswitched sockets are fitted with two earth terminals to provide a double earth facility for use when installations require a high integrity protective connection as specified within BS 7671:2008
DOUBLE POLE SWITCHING
All switchsockets have double pole switching (neutral makes first, breaks last).

K2945ALM 5
2 GANG DP WITH OUTBOARD ROCKERS AND DUAL EARTH TERMINALS

K2945D5ALM 5
2 GANG DP WITH OUTBOARD ROCKERS AND DUAL EARTH TERMINALS WITHOUT BOX

K2945D6ALM 1
2 GANG DP WITH RED OUTBOARD ROCKERS AND DUAL EARTH TERMINALS

K3045WHI 5
2 GANG DP WITHOUT BOX WITH OUTBOARD ROCKERS AND DUAL EARTH TERMINALS

K2477ALM 5
1 GANG DP WITH NEON AND DUAL EARTH TERMINALS

K2477D6ALM 1
1 GANG DP WITH NEON, RED ROCKER AND DUAL EARTH TERMINALS

K2446ALM 5
2 GANG DP WITH NEONS

K2446D6ALM 1
2 GANG DP WITH NEONS AND RED ROCKERS

K2435ALM 1
13A DP KEY OPERATED SOCKET

Earth terminal fitted in boxes.
DIMENSIONS
86 x 146 x 51mm
KNOCKOUTS
8 x 20mm – Three in top two in bottom sides and one in each end. One in base.
MOUNTING BOX
K830ALM* K897ALM
(*without side knockouts)
All boxes have a base knockout.
BOXES
BS 5733:2010
SOCKET
BS 1363-2:1995

All units are supplied with backboxes (except WHI, D5 products and Blankplates)

Metalclad Plus™

Socket Outlets

RCD PROTECTED 13 AMP

K6102ALM

K6302ALM

K6231ALM

ROUND PIN

K2871ALM

K2873ALM

NON STANDARD 13 AMP

K1247ALM

K1247D6ALM

K1248ALM

K1248D6ALM

13 AMP

K848ALM

K850ALM

ROUND PIN

K841ALM

K842ALM

K843ALM

K6102ALM 1
1 GANG DP
10mA ACTIVE CIRCUIT

K6302ALM 1
1 GANG DP
30mA ACTIVE CIRCUIT

K6305ALM 1
1 GANG DP
30mA PASSIVE CIRCUIT

K6231ALM 1
2 GANG SP
30mA ACTIVE CIRCUIT

K6233ALM 1
2 GANG SP
30mA PASSIVE CIRCUIT

It is important to ensure that the correct control circuit, active or passive, is selected for each application. See page 288 for definition.
Only suitable for supply voltage of 240V a.c.

DIMENSIONS
86 x 147 x 54mm

KNOCKOUTS
8 x 20mm – Three in top side, two in bottom side, one in base and one in each end.

SPARE BOX
K897ALM
BS 7288:1990

K2871ALM 1
1 GANG
5A DP
SHUTTERED

K2873ALM 5
1 GANG
15A DP
SHUTTERED

Earth terminal fitted in boxes.

DIMENSIONS
86 x 86 x 51mm

KNOCKOUTS
6 x 20mm – Two in one side and one in each of other three sides. One in base.
Spare Boxes with and without knockouts are available.
All boxes have a base knockout.
BS 546:1950

K1247ALM 5
1 GANG DP WITH
CLEAN EARTH FACILITY

K1247D6ALM 1
1 GANG DP
WITH RED ROCKER AND
CLEAN EARTH FACILITY

K1248ALM 1
2 GANG DP WITH
CLEAN EARTH FACILITY

K1248D6ALM 1
2 GANG DP
WITH RED ROCKERS AND
CLEAN EARTH FACILITY

These products are provided with facilities for 'clean earth' connection and are suitable for non standard plugs with 'T' shaped earth pin.
Earth terminal fitted in boxes.

NOTE
A suitable plug for these non standard sockets is 647WHI, see page 240.

DIMENSIONS
1 gang 86 x 86 x 51mm
2 gang 86 x 146 x 51mm

KNOCKOUTS
1 gang 6 x 20mm – Two in one side and one in each of other three sides. One in base.
2 gang 8 x 20mm – Three in top, two in bottom sides and one in each end. One in base.
Spare Boxes with and without knockouts are available.
All boxes have a base knockout
BS 1363-2:1995 where relevant

K848ALM 5
1 GANG

K850ALM 5
2 GANG
WITH DUAL EARTH
TERMINALS

K850ALM has two earth terminals providing a double earth facility when installations require a high integrity protective connection as specified within BS 7671:2008..

DIMENSIONS
1 gang 86 x 86 x 47mm
2 gang 86 x146 x 47mm

KNOCKOUTS
1 gang 6 x 20mm – Two in one side and one in each of other three sides. One in base.
2 gang 8 x 20mm – Three in top, two in bottom sides and one in each end. One in base.
Spare Boxes with and without knockouts are available.
All boxes have a base knockout.
BS 1363-2:1995

K841ALM 5
1 GANG
2A
SHUTTERED

K842ALM 5
1 GANG
5A
SHUTTERED

K843ALM 5
1 GANG
15A
SHUTTERED

Earth terminal fitted in box.

DIMENSIONS
86 x 86 x 47mm

KNOCKOUTS
6 x 20mm – Two in one side and one in each of other three sides. One in base.
Spare Boxes with and without knockouts are available.
All boxes have a base knockout.
BS 546:1950

Metalclad Plus™

Features and Benefits

When servicing or repairing appliances fuse carriers on connection units can be padlocked for additional safety

A secret key-operated switch helps prevent unauthorised usage

An optional tamperproof screw on the fuse carrier is particularly useful for appliances in public areas

In-line terminals means that cables can be cut to the same length. White printing gives instant terminal identification

A simple but effective cord grip securely holds the cable in connection units

Backboxes come with or without side knockouts. All boxes have a central knockout in the base for added on-site flexibility

Socket Outlets

127V
(NON UK)
15 AMP

K2271ALM

K2272ALM

Connection Units

SWITCHED
FUSED
13 AMP

K963KOALM

K942ALM

K962ALM

K962D6ALM

K3042WHI

K3062WHI

K2271ALM 5
1 GANG
SHUTTERED
(NON UK)

K2272ALM 5
2 GANG
SHUTTERED
(NON UK)

Earth terminal fitted in box.
DIMENSIONS
1 gang 86 x 86 x 47mm
2 gang 86 x146 x 47mm
KNOCKOUTS
1 gang 6 x 20mm.
Two in one side and one in each of other three sides. One in base
2 gang 8 x 20mm.
Three in top, two in bottom sides and one in each end. One in base
Spare Boxes with and without knockouts are available.
All boxes have a base knockout.
SASO 2204:2003

K963KOALM 1
DP WITH SECRET KEY OPERATED SWITCH, NEON AND TAMPERPROOF FUSE CARRIER SCREW*

K942ALM 5
DP SWITCHED

K942D5ALM 1
DP SWITCHED WITHOUT BOX

K962ALM 5
DP SWITCHED WITH NEON

K962D6ALM 1
DP SWITCHED WITH NEON AND RED ROCKER

Earth terminal fitted in base of the box.
DIMENSIONS
86 x 86 x 47mm
KNOCKOUTS
6 x 20mm.
Two in one side and one in each of other three sides, one in base.
Spare Boxes with and without knockouts are available.
All boxes have a base knockout.
BS 1363-4:1995

* Secret Key – 3405ZIC found on page 223.

K3042WHI 10
DP SWITCHED WITHOUT BOX

K3062WHI 10
DP SWITCHED WITH NEON WITHOUT BOX

All units are supplied with backboxes (except WHI, D5 products and Blankplates)

Metalclad Plus™

Switches

UNSWITCHED
FUSED
13 AMP

10 AMP

K932ALM

K972ALM

K972D6ALM

K3072WHI

K954ALM

K983ALM

K989ALM

K986ALM

K3054WHI

K3086WHI

K3591ALM

K3592ALM

K3593ALM

K5252ALM

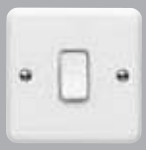
K3091WHI

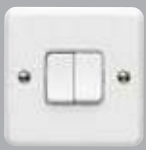
K3092WHI

K932ALM 5
DP SWITCHED
WITH FLEX OUTLET

K972ALM 5
DP SWITCHED
WITH FLEX OUTLET
AND NEON

K972D6ALM 1
DP SWITCHED
WITH FLEX OUTLET,
NEON AND RED ROCKER

K3072WHI 10
DP SWITCHED
WITH FLEX OUTLET
AND NEON
WITHOUT BOX

K954ALM 5
UNSWITCHED

K983ALM 5
UNSWITCHED WITH NEON

K989ALM 5
UNSWITCHED
WITH FLEX OUTLET

K986ALM 5
UNSWITCHED
WITH FLEX OUTLET AND NEON

DIMENSIONS
86 x 86 x 47mm
KNOCKOUTS
6 x 20mm.
Two in one side and one in each of other three sides, one in base.
Spare Boxes with and without knockouts are available.
All boxes have a base knockout.
BS 1363-4:1995

K3054WHI 10
UNSWITCHED
WITHOUT BOX

K3086WHI 10
UNSWITCHED WITH
FLEX OUTLET AND NEON
WITHOUT BOX

MOUNTING BOX
1 gang K829ALM* K899ALM
(*without side knockouts)
All boxes have a base knockout

K3591ALM 5
1 GANG SP
TWO WAY

K3592ALM 5
2 GANG SP
TWO WAY

K3593ALM 5
3 GANG SP
TWO WAY

K5252ALM 1
20AX DP KEY
OPERATED SWITCH

DIMENSIONS
Key Operated: 86 x 86 x 51mm
Switch: 86 x 86 x 47mm
SPARE BOXES
1 gang K829ALM* K899ALM
(*without side knockouts)
All boxes have a base knockout.
BS 5733:2010
SOCKET
BS 1363-2:1995
SWITCH
BS EN 60669-1:1999
These switches do NOT have to be derated when used with fluorescent or inductive loads.
An earth terminal is fitted in each box.
KNOCKOUTS
6 x 20mm
Two in one side and one in each of other three sides, one in base.
BS EN 60669-1:1999

K3091WHI 10
1 GANG SP
TWO WAY
WITHOUT BOX

K3092WHI 10
2 GANG SP
TWO WAY
WITHOUT BOX

MOUNTING BOX
1 gang K829ALM* K899ALM
(*without side knockouts)
All boxes have a base knockout

Metalclad Plus™

Switches

WIDE ROCKERS
10 AMP

K3781ALM

K3782ALM

DP Switches

20 AMP

K5212ALM

K5232ALM

K3012WHI

32 AMP AND
50 AMP

K5240ALM

K5230ALM

Triple Pole

32 AMP AND
10 AMP

K5116ALM

K2857ALM

K4858

Euro Data Frontplates

K181ALM

K182ALM

K184ALM

K3781ALM 5
1 GANG SP
TWO WAY
WITH WIDE ROCKER

K3782ALM 5
2 GANG SP
TWO WAY
WITH WIDE ROCKERS

These switches do NOT have to be derated when used with fluorescent or inductive loads.
An earth terminal is fitted in each box.

DIMENSIONS
86 x 86 x 47mm

KNOCKOUTS
6 x 20mm.
Two in one side and one in each of other three sides, one in base.
Spare Boxes with and without knockouts are available.
All boxes have a base knockout.
BS EN 60669-1:1999

K5212ALM 5
DP SWITCH

K5232ALM 1
DP SWITCH
WITH NEON

K5242ALM 5
DP SWITCH
WITH FLEX OUTLET
AND NEON

K3012WHI 10
DP SWITCH
WITHOUT BOX

Earth terminal fitted in base of box.

DIMENSIONS
86 x 86 x 47mm

KNOCKOUTS
6 x 20mm.
Two in one side and one in each of other three sides, one in base.
Spare Boxes with and without knockouts are available.
All boxes have a base knockout.
BS EN 60669-1:1999
DP Switches are not recommended for switching large banks of PCs.

K5240ALM 1
32A DP SWITCH
WITH NEON

K5230ALM 1
50A DP SWITCH
WITH NEON

Earth terminal fitted in base of box.

DIMENSIONS
K5240 86 x 86 x 65mm
K5230 147 x 86 x 65mm

KNOCKOUTS
K5240 6 x 20mm. Two in one side and one in each of other three sides, one in base.
K5230 4 x 20mm, 4 x 25mm

SPARE BOX
K5240 K8901ALM
K5230 K8902ALM
All boxes have a base knockout.
BS EN 60669-1:1999

K5116ALM 1
32A THREE POLE AND N SWITCH
WITH NEON AND
EARTH TERMINAL

K2857ALM 1
10A THREE POLE FAN ISOLATOR
WITH SWITCHLOCK
AND PADLOCK

K2859ALM 1
10A THREE POLE FAN ISOLATOR
WITHOUT SWITCHLOCK

K4858 10
SWITCHLOCK
FOR FAN ISOLATOR

K5116
440V max. AC22, 12kW (16HP) & 415V, 3 phase 32A continuous duty.
Making capacity is 2000A peak.
Lockable 'ON' or 'OFF' with MK padlock no K2000.

K2857
For local isolation of fans with or without timers for repair or routine.

DIMENSIONS
K5116 147 x 86 x 65mm
K2857 86 x 86 x 47mm

KNOCKOUTS
K5116 4 x 20mm², 4 x 25mm²
K2857 6 x 20mm²

SPARE BOXES
K5116 K8902ALM
K2857 K899ALM, K829ALM
BS EN 60947-3:1999
BS EN 60669-2-4 (**K2857**)

K181ALM 5
1 GANG EURO FRONTPLATE
ONE MODULE
APERTURE SIZE 25 X 50MM

K182ALM 5
1 GANG EURO FRONTPLATE
TWO MODULE
APERTURE SIZE 50 X 50MM

K184ALM 1
2 GANG EURO FRONTPLATE
FOUR MODULE
APERTURE SIZE 100 X 50MM

MOUNTING BOXES
Mounting Box is not supplied with frontplate.
Suitable for flush boxes to BS 4662:2006 and surface boxes to BS 5733:2010 Refer to appropriate module for minimum box depth.

FIXING CENTRES
1 gang 60.3mm
2 gang 120.6mm

STANDARDS
BS 5733:2010 where applicable

NOTE
No grid required, modules just clip into place.

All units are supplied with backboxes (except WHI, D5 products and Blankplates)

All units are supplied with backboxes
(except WHI, D5 products and Blankplates)

Metalclad Plus™

Euro Power Modules

Euro Datacom Modules

RJ11/12 | RJ45 CAT 6 | RJ45 CAT 5e

K3182WHI

K3184WHI

K5830WHI

K5831WHI

K5832WHI

K5833WHI

K5834WHI

K5837WHI

K5887WHI

K5887BLK

K5846WHI

K5846sBLK

K5864WHI

K5844WHI

K5845WHI

K5845BLK

K3182WHI 1
1 GANG EURO
FRONTPLATE
TWO MODULE
APERTURE SIZE
50 X 50MM

K3184WHI 1
2 GANG EURO
FRONTPLATE
FOUR MODULE
APERTURE SIZE
100 X 50MM

MOUNTING BOXES
Mounting Box is not supplied with frontplate.
Suitable for flush boxes to BS 4662:2006 and surface boxes to BS 5733:2010 Refer to appropriate module for minimum box depth.
FIXING CENTRES
1 gang 60.3mm
2 gang 120.6mm
STANDARDS
BS 5733:2010 where applicable
NOTE
No grid required, modules just clip into place.

Mains operated products and extra low voltage modules must not be installed within the same frontplate. Refer to BS 7671:2008 for details.

K5830WHI 10
K5830BLK 10
UK 1 GANG
EURO 2 MODULE
13A 250V SHUTTERED

K5831WHI 10
K5831BLK 10
GERMAN 2P+E
16A 250V SHUTTERED
EURO 2 MODULE
(NON UK)

K5832WHI 10
K5832BLK 10
AMERICAN 2P+E
15A 127V SHUTTERED
EURO 2 MODULE
(NON UK)

K5830
MOUNTING BOX
35mm
46mm (for extra wiring space)
DIMENSIONS
50 x 50mm
BS 1363-2:1995
K5831
MOUNTING BOX
46mm
DIMENSIONS
50 x 50mm
IEC 60884-1:2006
K5832
MOUNTING BOX:
35mm
46mm (for extra wiring space)
DIMENSIONS
50 x 50mm
SASO 2204:2003

K5833WHI 10
K5833BLK 10
UK 1 GANG EURO 2 MODULE
5A 250V SHUTTERED

K5834WHI 10
K5834BLK 10
FRENCH/BELGIAN 2P+E
16A 250V SHUTTERED
EURO 2 MODULE
(NON UK)

K5837WHI 1
K5837BLK 1
USB CHARGING MODULE
EURO 2 MODULE

K5833
MOUNTING BOX
35mm
46mm
(for extra wiring space)
DIMENSIONS
50 x 50mm
BS 546:1950
K5834
MOUNTING BOX
46mm
DIMENSIONS
50 x 50mm
NF C61-314
K5837
MOUNTING BOX
35mm
46mm
(for extra wiring space)
DIMENSIONS
50 x 50mm
Features 2 charging sockets each delivering 1A charging current at 5Vdc (total 2A max). Allows charging of portable devices via USB 2.0 type A plug.
IEC 60950-1
IEC 61000-6-1/3

K5887WHI 5
K5887BLK 5
RJ11/12
ONE MODULE 25 X 50MM

Suitable for both RJ11 and RJ12 jacks
RJ11
4 wire
RJ12
6 wire
MOUNTING BOXES
Minimum box depth 25mm
FCC68
EN 41003

K5846WHI 5
K5846BLK 5
RJ45 CAT 6
ONE MODULE 25 X 50MM

K5846SWHI 5
K5846SBLK 5
RJ45 CAT 6 SCREENED
ONE MODULE 25 X 50MM

K5864WHI 5
RJ45 CAT 6 ANGLED
ONE MODULE 25 X 50MM

Cat 6 performance.
Suitable for both 568A and 568B wiring schemes.
MOUNTING BOXES
Minimum Box Depth 35mm
ISO/IEC 11801
EN 50173
TIA 568
EN 41003

K5844WHI 5
RJ45 CAT 5e ANGLED
ONE MODULE 25 X 50MM

K5845WHI 5
K5845BLK 5
RJ45 CAT 5e
ONE MODULE 25 X 50MM

Enhanced Cat 5 performance.
Suitable for both 568A and 568B wiring schemes.
MOUNTING BOXES
Minimum box depth 25mm standard
ISO/IEC 11801
EN 50173
TIA 568
EN 41003

For the full range of euro modules see Logic Plus pages 46-48

Metalclad Plus™

Euro Datacom Modules

LJU6C Data Frontplates

TELEPHONE

K5820WHI

K5821WHI

K5821BLK

BNC

K5801WHI

BLANKS

K180WHI

K188WHI K188BLK

K186WHI K186BLK

FRONTPLATES

K172ALM

K5820WHI 5
K5820BLK 5
TELEPHONE MASTER
ONE MODULE 25 X 50MM

K5821WHI 5
K5821BLK 5
TELEPHONE SECONDARY
ONE MODULE 25 X 50MM

MOUNTING BOXES
Minimum depth 25mm
BS 6312-2

K5801WHI 5
BNC 50Ω
ONE MODULE 25 X 50MM

50 Ohm crimp connector suitable for use with RG58, URM43, URM76 and Beldon 9907 type co-axial cables.

MOUNTING BOXES
Minimum box depth 25mm

K180WHI 10
TWO MODULE
BLANK 50 X 50MM

K188WHI 10
K188BLK 10
ONE MODULE
BLANK 25 X 50MM

K186WHI 10
K186BLK 10
HALF MODULE
BLANK 12.5 X 50MM

BS 5733:2010 where applicable

K172ALM 5
1 GANG TWIN
LJU6C FRONTPLATE
TWO MODULE
APERTURE SIZE
22 X 37MM

MOUNTING BOXES
Suitable for flush boxes to BS 4662:2006 and surface boxes to BS 5733:2010
Refer to appropriate module for minimum box depth.

FIXING CENTRES
1 gang 60.3mm
BS 5733:2010 where appropriate

NOTE
No grid required, modules just clip into place

For the full range of euro modules see Logic Plus pages 46-48

LJU6C Datacom Modules

RJ11/12

K5787WHI

RJ45 CAT 6

K5746WHI

K5746BLK

K5746SWHI

K5746SBLK

RJ45 CAT 5e

K5745WHI

K5745BLK

BLANKS

K170WHI

K170BLK

K5787WHI 5
RJ11/12
ONE MODULE

Suitable for both RJ11 and RJ12 jacks.
RJ11
4 wire
RJ12
6 wire
MOUNTING BOXES
Minimum box depth 25mm
FCC68
EN41003

K5746WHI 5
K5746BLK 5
RJ45 CAT 6
ONE MODULE
K5746SWHI 5
K5746SBLK 5
RJ45 CAT 6
SCREENED
ONE MODULE

Cat 6 performance.
Suitable for both 568A and 568B wiring schemes.
MOUNTING BOXES
Minimum Box Depth 35mm
ISO/IEC 11801
EN 50173
TIA 568
EN 41003

K5745WHI 5
K5745BLK 5
RJ45 CAT 5e
ONE MODULE

Enhanced Cat 5 performance.
Suitable for both 568A and 568B wiring schemes.
MOUNTING BOXES
Minimum box depth 25mm
ISO/IEC 11801
EN 50173
TIA 568
EN 41003

K170WHI 10
K170BLK 10
ONE MODULE BLANK

BS 5733:2010 where appropriate

Metalclad Plus™

Boxes

K829ALM

K830ALM

K899ALM

K899WHI

K897ALM

K897WHI

Blank Plates

K3390ALM

K3390WHI

K3369ALM

K3369WHI

Grid Plus Frontplates

K3492ALM

K3494ALM

K3502ALM

K3491WHI

K3492WHI

K3493WHI

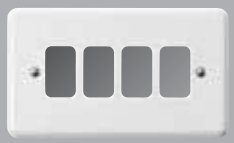
K3494WHI

K829ALM 5
1 GANG
WITHOUT KNOCKOUTS

K830ALM 5
2 GANG
WITHOUT KNOCKOUTS

K899ALM 10

K899WHI 10
1 GANG
6 X 20MM KNOCKOUTS

All boxes are fitted with a brass earth terminal and a base knockout.

DIMENSIONS
1 gang 86 x 86 x 38mm
2 gang 86 x 147 x 38mm

These boxes are not suitable for mounting Grid Plus modules or modular data/telecom modules.

BS 5733:2010

K897ALM 5

K897WHI 5
2 GANG
8 X 20MM KNOCKOUTS

K3390ALM 5

K3390WHI 5
1 GANG

K3369ALM 5

K3369WHI 5
2 GANG

DIMENSIONS
K3390 86 x 86mm
K3369 86 x 147mm

FIXING CENTRES
K3390 60.3mm
K3369 120.6mm

BS 5733:2010

Blank plates supplied without backboxes.

K3491ALM 10
1 MODULE

K3492ALM 10
2 MODULE

K3493ALM 5
3 MODULE

K3494ALM 5
4 MODULE

K3496ALM 1
6 MODULE

K3498ALM 1
8 MODULE

K3499ALM 1
9 MODULE

K3502ALM 1
12 MODULE

K3508ALM 1
18 MODULE

K3514ALM 1
24 MODULE

DIMENSIONS
1 & 2 module 86 x 86mm
3 & 4 module 86 x 146mm
6 & 8 module 146 x 146mm
9 & 12 module 146 x 206mm
18 module 206 x 206mm
24 module 206 x 266mm

BS 5733:2010

See Grid Plus page 189 for a complete selection of switching modules.

K3491WHI 10
1 MODULE

K3492WHI 10
2 MODULE

K3493WHI 5
3 MODULE

K3494WHI 5
4 MODULE

Metalclad Plus™

Echo™ is an innovative range of entirely wireless, batteryless and self-powered switches, only available from MK Electric.

Echo™ Transmitters

1 AND 2 CHANNEL TRANSMITTERS FOR ECHO™

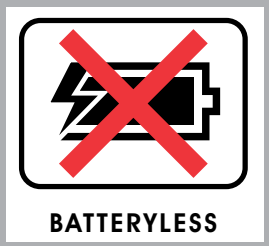

K3786ALM

K3786WHI

K3787ALM

K3787WHI

WIRELESS

No wires offers the benefits of almost instant switch installation and total location flexibility, resulting in reduced costs and disruption as well as improved speed and ease of installation – invaluable for areas needing to rearrange space periodically, e.g. commercial offices, or those where the channelling of walls isn't permittable or feasible, such as historic buildings or glass partition walls.

BATTERYLESS

No batteries means low maintenance and low running costs. No need to buy, fit, replace or dispose of batteries, eliminating nuisance and waste for a more sustainable option.

SELF-POWERED

The new Echo™ range works by harvesting tiny amounts of ambient energy which power a switch (Transmitter) to send an RF signal to the Switch Receiver which is connected to the lighting circuit – operating lighting at ranges of up to 30 metres within typical buildings.

For more information on Echo™, please see the Echo™ section page 21.

K3786ALM 1
K3786WHI 1
1 CHANNEL SWITCH TRANSMITTER FOR ECHO™

K3787ALM 1
K3787WHI 1
2 CHANNEL SWITCH TRANSMITTER FOR ECHO™

OPERATING FREQUENCY
868.3 Mhz
IP RATING
IP2 x D
DIMENSIONS
86 x 86mm
BS EN 60669-1
BS EN 60669-2-1
ETSI EN 301 489-1+ -3
ETSI EN 300 220-3

DURAPLUG®

RANGE INTRODUCTION

The Duraplug® range of heavy duty products has become a virtual byword for durability, strength and reliability.

Duraplug® offers a wide range of products including a complete range of safety extension leads featuring rubber covered plugs, extension leads, trailing sockets, lead connectors and cable couplers. All Duraplug® products are made from top quality, high impact resistant materials such as ABS/polycarbonate and rubber.

FEATURES & BENEFITS

- Produced with top quality, high impact resistant materials such as ABS/polycarbonate and rubber
- Sockets have visible red nylon shutters
- Lead connectors have retaining lugs to prevent accidental disconnection
- All internal parts of trailing sockets are retained in the base for ease of wiring

Heavy Duty Extension Leads

4 WAY
13 AMP

13 AMP

13 AMP

Heavy Duty Portable Socket

4 WAY
FILTERED
13 AMP

EXL135WHI EXL135BLK

EXL136WHI EXL136BLK

EXL137WHI EXL137BLK

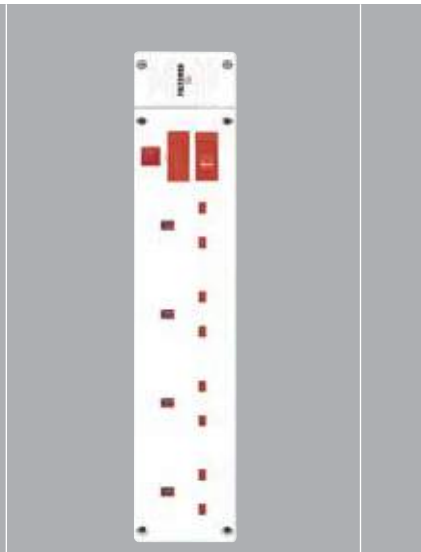

744WHI

EXL135WHI 1
EXL135BLK 1
13A WITH FUSE, NEON AND
2 METRE CABLE

Fitted with approved PVC insulated cable of appropriate core size for maximum 13A rating and a Duraplug® rubber plug.
The sockets are manufactured in high impact ABS/Polycarbonate.
Fitted with a fuse carrier and 13A fuse to BS 1362
BS 1363/A-2:1995
BS EN 50525-2-11 – Cable

EXL136WHI 1
EXL136BLK 1
13A WITH SWITCH, NEON AND
2 METRE CABLE

Fitted with approved PVC insulated cable of appropriate core size for maximum 13A rating and a Duraplug® rubber plug.
The sockets are manufactured in high impact ABS/Polycarbonate.
BS 1363/A-2:1995
BS EN 50525-2-11 – Cable

EXL137WHI 1
EXL137BLK 1
13A WITH FUSE, SWITCH, NEON AND
2 METRE CABLE

Fitted with approved PVC insulated cable of appropriate core size for maximum 13A rating and a Duraplug® rubber plug.
The sockets are manufactured in high impact ABS/Polycarbonate.
BS 1363/A-2:1995
BS EN 50525-2-11 – Cable

744WHI 1
13A WITH SWITCH, NEON AND FUSE

Fitted with a fuse carrier and 13A fuse to BS 1362.
Manufactured in high impact ABS/Polycarbonate.
Can also be wall mounted.
Fitted with a fuse carrier and 13A fuse to BS 1362
DIMENSIONS
317 x 68 x 31mm
SPECIFICATION
Max. Power 3.14kW
Response time (Varistor) better than 20ns
BS 1363/A-2:1995

Duraplug®

Heavy Duty Portable Socket

4 WAY
13 AMP

FC4134WHI FC4134BLK

13 AMP

FC4135WHI FC4135BLK

13 AMP

FC4136WHI FC4136BLK

Heavy Duty Trailing Sockets

13 AMP

FC133WHI

FC133ORG

FC133BLK

13 AMP

FCT133WHI

FCT133BLK

FC153BLK

FC4134WHI 1
FC4134BLK 1
13A WITH FUSE AND NEON

Manufactured in high impact ABS/ Polycarbonate incorporating optional wall mounting holes and equal length wire stripping.
DIMENSIONS
317 x 68 x 31mm
BS 1363/A-2:1995

FC4135WHI 1
FC4135BLK 1
13A WITH SWITCH AND NEON

Manufactured in high impact ABS/ Polycarbonate incorporating optional wall mounting holes and equal length wire stripping.
DIMENSIONS
317 x 68 x 31mm
BS 1363/A-2:1995

FC4136WHI 1
FC4136BLK 1
13A WITH SWITCH, FUSE AND NEON

Manufactured in high impact ABS/ Polycarbonate incorporating optional wall mounting holes and equal length wire stripping.
DIMENSIONS
317 x 68 x 31mm
BS 1363/A-2:1995

FC133WHI 10
FC133BLK 10
FC133ORG 10
13A SINGLE OUTLET

Manufactured from tough Polypropylene with rubber cover. All internal component parts are retained in the base for ease of wiring.
DIMENSIONS
79 x 62 x 29mm
BS 1363/A-2:1995

FCT133WHI 10
FCT133BLK 10
FCT133ORG 10
13A TWIN OUTLET
FC153BLK 10
15A SINGLE OUTLET
ROUND PIN

FCT133
Manufactured from tough Polypropylene with rubber cover. All internal component parts are retained in the base for ease of wiring.
BS 1363/A-2:1995
FC153
Rubber cover.
BS 546:1950
DIMENSIONS
FCT133 80 x 125 x 29mm
FC153 67 x 53 x 33mm

Duraplug®

Lead Connectors

TWO & THREE PIN
10 AMP

SPARES
10 AMP

Rubber Plugs

Cable Couplers

LCP102BLK

LCP103BLK

LCP102PBLK

LCP102SBLK

LCP103SBLK

LCP103PBLK

LCP103PWHI

PF133WHI

PF133ORG

P153BLK

CCP53BLK

CCP153BLK

LCP102BLK 10
LCP102ORG 10
TWO PIN 10A PLUG AND SOCKET
LCP103WHI 10
LCP103BLK 10
THREE PIN 10A PLUG AND SOCKET

This range of connectors provides a safe and easy method of extending power cables and electrical tools and appliances. With rubber cover and polypropylene inserts with integral cable grips. Retaining lugs prevent accidental disconnection.
Two pin versions are only for use with double insulated Class 2 appliances.
Three pin versions must be used with earthed appliances.
DIMENSIONS
40 x 25 x 80mm
BS 5733: 2010
Comply with IP44 Ingress Protection rating to BS EN 60529:1992

LCP102PBLK 10
LCP102PORG 10
10A PLUG TWO PIN
LCP102SBLK 10
LCP102SORG 10
10A SOCKET TWO PIN

BS 5733:2010
Comply with IP44 Ingress Protection rating to BS EN 60529:1992

LCP103PWHI 10
LCP103PBLK 10
10A PLUG THREE PIN
LCP103SWHI 10
LCP103SBLK 10
10A SOCKET THREE PIN

BS 5733:2010
Comply with IP44 Ingress Protection rating to BS EN 60529:1992

P53BLK 10
5A ROUND PIN
PF133WHI 10
PF133ORG 10
PF133BLK 10
FITTED WITH 13A FUSE
P153BLK 10
15A ROUND PIN

PF133
With rubber cover.
Available with alternative fuse ratings to special order only.
Approved by ASTA Licence no.470
BS 1363/A-1:1995

P53BLK
Manufactured in rubber

P153BLK
With rubber cover and ABS/ Polycarbonate base.
BS 546:1950

CCP53BLK 1
5A PLUG & SOCKET
CCP153BLK 1
15A PLUG & SOCKET
CCP133PBLK 1
SPARE 13A PLUG

These splashproof couplers are a rugged means of connecting cables in industrial and commercial environments. Fitted with heavy duty cable clamps, tapered cable entry and fuse (13A version only).
DIMENSIONS
Diameter x Length
CCP53 60 x 173mm
CCP133 65 x 182mm
CCP153 68 x 180mm
BS 5733:2010 (BS 1363 Pin centres for 13A versions)
BS 5733:2010 (BS 546 Pin centres for 5A and 15A versions)

Plugs and Adaptors

Safetyplugs

Toughplugs

NON STANDARD

Established range of plugs and adaptors. The established names of Safetyplug™ and Toughplug™ strengthen MK's reputation for high quality products with the accent on safety and quality.

646WHI 10
646CHA 10
FITTED WITH 13A FUSE
64603WHI 10
FITTED WITH 3A FUSE
645NIP 100
SECRET SCREW FOR SAFETYPLUG AND TOUGHPLUG
644ZIC 10
KEY FOR SECRET SCREW

See page 222 for spare fuse links.
BS 1363-1:1995

647WHI 10
647CHA 10
FITTED WITH 13A FUSE

See page 222 for spare fuse links.
T shaped earth pin for use with MK non-standard 13A sockets only.
BS 1363-1:1995 (where relevant)

655WHI 10
FITTED WITH 13A FUSE
65503WHI 10
FITTED WITH 3A FUSE
655BLK 10
655ORG 10
655RED 10
FITTED WITH 13A FUSE
655D8WHI 10
655D8RED 10
MARKED 'HOSPITAL PROPERTY'
FITTED WITH 13A FUSE

See page 222 for spare fuse links.
BS 1363/A-1:1995

Plugs and Adaptors

Round Pin Plugs

Plug Adaptors

505WHI

515WHI

641WHI

690WHI

692WHI

696WHI

698PPK

502WHI 10
2A

505WHI 10
5A

515WHI 10
15A RESILIENT COVER

641WHI 10
5A FUSED

643WHI 10
15A FITTED WITH 5A FUSE

See page 222 for spare fuse links to BS 646.
BS 546:1950

690WHI 5
13A WITH 1 X 13A AND
1 COMBINED 16A UNIVERSAL
AND GERMAN TYPE 2P+E
SOCKET OUTLET
FUSED 13A

BS 1363-3:1995 (where relevant)

692WHI 5
13A WITH
3 X 13A SOCKET OUTLETS
FUSED 13A

696WHI 5
13A WITH
2 X 13A SOCKET OUTLETS
UNFUSED

698PPK 10
13A WITH
1 X 1A SHAVER SOCKET OUTLET
FUSED 1A

BS 1363-3:1995 (where relevant)

MASTERSEAL PLUS™

RANGE INTRODUCTION

Masterseal Plus™ has been specifically developed for use in both outdoor and indoor environments, and where wiring devices and accessories would be at risk from penetration by dust or water.

With a rating of IP66*, Masterseal Plus™ offers total protection against dust, and is protected against high pressure jets of water from any direction. Masterseal Plus™ sockets can seal around virtually any standard 13A plug – including moulded on plugs – allowing safe connection for any appliance.

An improved catch eases the opening and closing of the lid, whilst ensuring the integrity of the seal. The gasket is fixed to the mounting frame of the product, enabling rapid installation, and removing the risk of error when placing a floating gasket.

The Masterseal Plus™ range extends to over 90 product variations as the enclosures house selected products from the Logic Plus™ portfolio – thus offering all the benefits of the Logic Plus™ range within the Masterseal Plus™ enclosures.

*Grid Plus enclosures are IP56

FEATURES & BENEFITS

IP66*

Masterseal Plus™ offers total dust ingress protection, and is protected against high-pressure water jets from any direction, when in use.

ROBUST CONSTRUCTION AND TEMPERATURE TOLERANT

Masterseal Plus™ will not discolour, crack or fade in UV light (unlike many other plastics), and will maintain operation in extremes of heat and cold.

IMPACT PROTECTION

Masterseal Plus™ enclosures are made from polycarbonate, one of the toughest thermoplastics available – incidentally also used in products such as motorcycle helmets.

WIDEST RANGE

The Masterseal Plus™ range extends to over 90 product variants. The enclosures house products from the Logic Plus™ range, all enclosures and switches are available in Grey, White and Black.

20 YEAR GUARANTEE

Masterseal Plus™ is guaranteed for an industry-leading 20 years. (10 years for electronic products)

MK® by Honeywell
CELEBRATING 100 MILLION SOCKETS

Technical Hotline
+44 (0)1268 563720

Masterseal Plus™

ULTIMATE PROTECTION

For the Great Brtitish Weather

MK Electric has always been at the forefront of technical innovation, not least in the IP environment.

Masterseal Plus™ has been tested to levels well in excess of British Standards. Masterseal Plus™ safeguards users in the harshest of environments, employing a gel seal for improved protection.

With a superb rating of IP66, Masterseal Plus™ is dust-tight to any ingress, and water-tight against high-pressure water jets from any direction.

HOW TO SPECIFY

A range of water and dust tight enclosures, rated at IP66 when in use, manufactured from UV stable thermoplastic material and utilising a gel gasket seal and easy to open catch mechanism.

To enable quick and easy installation the seal will be fixed to the mounting frame of the unit.

Containing a urea moulded anti-bacterial range of wiring accessories, designed with soft curves and chamfered top edges that offer a slim unobtrusive appearance.

Cable connections must be upward facing with easy to identify white markings on a dark background, grouped in a straight line with captive terminal screws for ease of installation.

All standard BS sockets to have a 3 pin operated “child Resistant” shutter system and double pole switching, with the contacts designed such that the neutral makes before and breaks after the live pole for improved safety.

All products to be made in the UK.

Masterseal Plus™

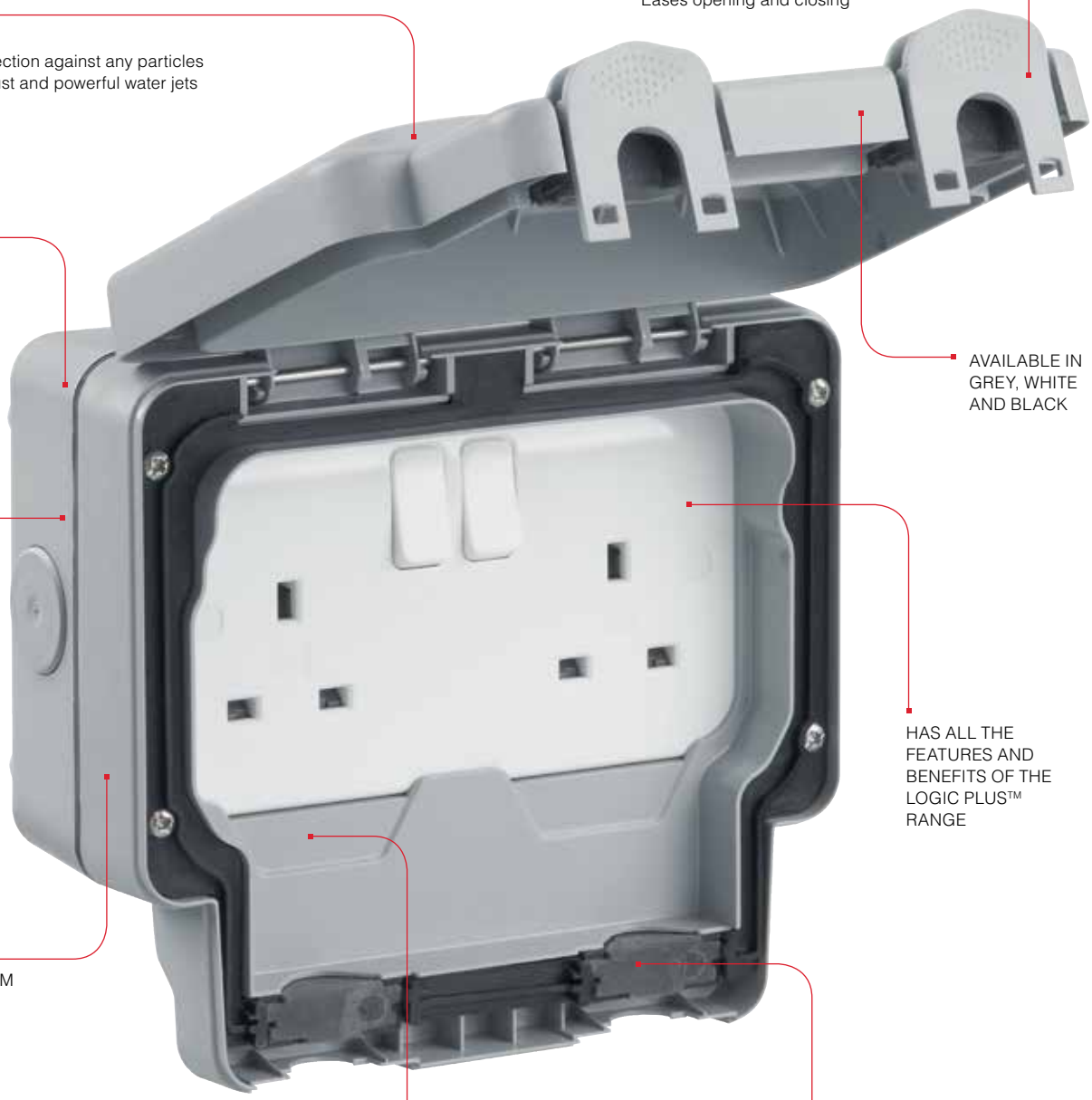

IMPROVED CATCH
Eases opening and closing

IP66
Protection against any particles of dust and powerful water jets

REAR DRILL HOLES
For easier installation

AVAILABLE IN GREY, WHITE AND BLACK

FIXED GASKET SPEEDS INSTALLATION
and removes risk of error when placing a floating gasket

HAS ALL THE FEATURES AND BENEFITS OF THE LOGIC PLUS™ RANGE

MANUFACTURED FROM POLYCARBONATE
For impact protection

SEALED IN USE WITH VIRTUALLY ANY STANDARD 13A PLUG
including moulded on plugs

GEL SEAL
Durable water and dust tight seal for improved protection

Masterseal Plus™

To view the video visit the
MK Electric by Honeywell YouTube channel

by Honeywell

CELEBRATING 100 MILLION SOCKETS

Masterseal Plus™

Switchsocket Outlets, Timer Socket Outlets, and Key Operated Socket Outlets

13 AMP
IP66

RCD PROTECTED
13 AMP
IP66

Socket Outlets

13 AMP
IP66

16 AMP
IP66
(NON UK)

K56486GRY

K56485GRY

K56301GRY

K56480GRY

K56483GRY

K56482BLK

K56485WHI

K56231BLK

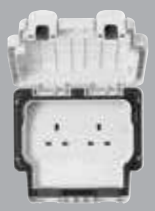
K56481WHI

K56483WHI

K56488GRY

K56487GRY

K56233WHI

K56481BLK

K56483BLK

K56486GRY 1
K56486WHI 1
K56486BLK 1
13A DP
1 GANG SWITCHED
K56482GRY 1
K56482WHI 1
K56482BLK 1
13A DP
2 GANG SWITCHED
K56488GRY 1
K56488WHI 1
K56488BLK 1
13A DP SWITCHED
2 GANG
NEON
CLEAR COVER

Fixing holes are for No.8 woodscrews (not supplied).
K56486 has 4 x 20mm entries, 1 on top, bottom and each side and is supplied with an earth terminal in the back box.
2 gang backbox has 5 cable entries, 2 on top and 1 centrally on other 3 sides. Supplied with earth terminals in backbox.
DIMENSIONS
1 gang 157 x 110 x 89mm
2 gang 157 x 175 x 89mm
BS 1363-2:1995
IP66 BS EN 60529:1992

K56485GRY 1
K56485WHI 1
K56485BLK 1
13A SP
1 GANG
WITH ELECTRONIC
TIMER MODULE
K56487GRY 1
K56487WHI 1
K56487BLK 1
13A 1 GANG DP
KEY OPERATED SOCKET

Timer Module meets the requirements of IEC 60730-1 and IEC 60730-2-7 Standards

K56301GRY 1
K56301WHI 1
K56301BLK 1
1 GANG DP
30mA RATED TRIPPING
CURRENT ACTIVE
CONTROL CIRCUIT
K56231GRY 1
K56231WHI 1
K56231BLK 1
2 GANG SP
30mA RATED TRIPPING
CURRENT ACTIVE
CONTROL CIRCUIT
K56233GRY 1
K56233WHI 1
K56233BLK 1
2 GANG SP
30mA RATED TRIPPING
CURRENT PASSIVE
CONTROL CIRCUIT

RCD protected sockets are pulsating d.c. and a.c. fault current sensitive.
Fixing holes are for No.8 woodscrews (not supplied).
Supplied with an earth terminal in the back box. The Sentrysocket has 5 entries. Suitable for supply voltage of 240V a.c.
Standard Shutters.
DIMENSIONS
157 x 175 x 89mm
BS 7288:1990
IP66 BS EN 60529:1992

K56480GRY 1
K56480WHI 1
K56480BLK 1
13A 1 GANG
UNSWITCHED
K56481GRY 1
K56481WHI 1
K56481BLK 1
13A 2 GANG
UNSWITCHED

Fixing holes are for No.8 woodscrews (not supplied).
K56480 has 4 x 20mm entries, 1 on top, bottom and each side and is supplied with an earth terminal in the back box.
BS 1363-2:1995
IP66 BS EN 60529:1992
K56481 Backbox has 5 cable entries, 2 on top and 1 centrally on other 3 sides. Supplied with earth terminals in backbox.
DIMENSIONS
1 gang 157 x 110 x 89mm
2 gang 157 x 175 x 89mm
BS 1363-2:1995
IP66 BS EN 60529:1992

K56483GRY 1
K56483WHI 1
K56483BLK 1
16A
1 GANG
2P+E
UNSWITCHED
(NON UK)

Fixing holes are for No.8 woodscrews (not supplied).
K56483 is for use with plugs having right angled cable exit.
DIMENSIONS
157 x 110 x 89mm
IEC 60884-1:2006
IP66 BS EN 60529:1992

Masterseal Plus™ enclosures are manufactured from polycarbonate. This provides an extremely high level of impact resistance. However some chemicals and synthetic oils can harm polycarbonate.
Refer to chemical resistance table on page 553.

Masterseal Plus™

Key Operated Switches

20 AMP
IP66

K56425GRY

K56425WHI

K56425BLK

K56425GRY 1
K56425WHI 1
K56425BLK 1
20A
1 GANG
DP KEY OPERATED SWITCH

Fixing holes are for No.8 woodscrews (not supplied).
K56425 Backbox has 4 x 20mm entries, 1 on top, bottom and each side and is supplied with an earth terminal in the back box.
DIMENSIONS
160 x 117 x 89mm
BS EN 60669-1:1999
IP66 BS EN 60529:1992

Connection Units

13 AMP
IP66

K56410WHI

K56410BLK

K56410GRY

K56410GRY 1
K56410WHI 1
K56410BLK 1
13A DP
1 GANG
SWITCHED, FUSED

Fitted with a 13A fuse link to BS 1362.
Fixing holes are for No.8 woodscrews (not supplied).
Backbox has 4 x 20mm entries, 1 on each edge, and is supplied with an earth terminal in the backbox.
DIMENSIONS
160 x 117 x 89mm
BS 1363-4:1995
IP66 BS EN 60529:1992

Switches

10 AMP
IP66

K56400GRY

K56401WHI

K56402BLK

K56400GRY 1
K56400WHI 1
K56400BLK 1
10A 1 GANG
SP ONE-WAY

K56401GRY 1
K56401WHI 1
K56401BLK 1
10A 1 GANG
SP TWO-WAY

K56402GRY 1
K56402WHI 1
K56402BLK 1
10A 2 GANG
SP ONE-WAY

10 AMP
IP66

K56406GRY

K56407BLK

K56408WHI

K56406GRY 1
K56406WHI 1
K56406BLK 1
10A 1 GANG
DP ONE-WAY

K56407GRY 1
K56407WHI 1
K56407BLK 1
10A 1 GANG
SP TWO-WAY
PUSH TO MAKE OR PUSH TO BREAK
'BELL'

K56408GRY 1
K56408WHI 1
K56408BLK 1
10A 1 GANG
SP TWO-WAY
PUSH TO MAKE OR PUSH TO BREAK
'PRESS'

Fixing holes are for No.8 woodscrews (not supplied).
Each switch is fitted with a neon which can be wired as a locator.
The enclosure has 4 x 20mm entries, 1 on top, bottom and each side and is supplied with an earth terminal and a loop terminal in the back box.
These switches (except push switches) do NOT have to be derated when used with fluorescent or inductive loads.
DIMENSIONS
95 x 95 x 57mm
BS EN 60669-1:1999
IP66 to BS EN 60529:1992

20 AMP
IP66

K56409GRY

K56409WHI

K56409BLK

K56409GRY 1
K56409WHI 1
K56409BLK 1
20A 1 GANG
DP ONE-WAY
'PRESS'

Fixing holes are for No.8 woodscrews (not supplied).
Each switch is fitted with a neon which can be wired as a locator.
The enclosure has 4 x 20mm entries, 1 on top, bottom and each side and is supplied with an earth terminal and a loop terminal in the back box.
DIMENSIONS
95 x 95 x 57mm
BS EN 60669-1:1999
IP66 to BS EN 60529:1992

Grid Plus Enclosures

IP56

K56414GRY

K56414WHI

K56414BLK

K56414GRY 1
K56414WHI 1
K56414BLK 1
MODULAR GRID PLUS ENCLOSURE SUPPLIED WITH 1 AND 2 GANG INSERTS*

Fixing holes are for No.8 woodscrews (not supplied).
Backbox has 4 x 20mm entries, 1 on top, bottom and each side.
Supplied with an earth terminal and a loop terminal in the backbox.
DIMENSIONS
95 x 95 x 80mm
BS EN 60669-1:1999
IP56 to BS EN 60529:1992

* NOTE: Installers may select any switch or neon modules, excluding dimmers, from Grid Plus range and configure product to suit installation requirements.

Masterseal Plus™

Switch Enclosures

IP66

K56420GRY

K56421WHI

K56422BLK

K56422GRY

K56420GRY 1
K56420WHI 1
K56420BLK 1
1 GANG FOR USE WITH ANY ONE SWITCH MODULE
K56421GRY 1
K56421WHI 1
K56421BLK 1
1 GANG WITH NEON FOR USE WITH ANY SWITCH AND ANY NEON MODULE
K56422GRY 1
K56422WHI 1
K56422BLK 1
2 GANG FOR USE WITH ANY TWO SWITCH MODULES

Fixing holes are for No.8 woodscrews (not supplied).
Each enclosure is fitted with a neon which should be wired as a locator. The enclosure has 4 x 20mm entries, 1 on top, bottom and each side and is supplied with an earth terminal and a loop terminal in the back box.

NOTE
These enclosures are for use with the Masterseal Plus™ switch and neon modules.

DIMENSIONS
95 x 95 x 57mm
IP66 to BS EN 60529:1992

Switch Modules

10 AMP

56881BLK

56882BLK

56883BLK

56881BLK 10
10A SP
ONE-WAY
56882BLK 10
10A SP
TWO-WAY
56883BLK 10
10A DP
ONE-WAY

For use only with Masterseal Plus™ switch enclosures.
These switches do NOT have to be derated when used with fluorescent or inductive loads.
BS EN 60669-1:1999

20 AMP

56891BLK

56892BLK

56893BLK

56896BLK

56891BLK 10
20A SP
ONE-WAY
56892BLK 10
20A SP
TWO-WAY
56893BLK 10
20A
INTERMEDIATE
56896BLK 10
20A DP
ONE-WAY

For use only with Masterseal Plus™ switch enclosures.
These switches do NOT have to be derated when used with fluorescent or inductive loads.
BS EN 60669-1:1999

Neon Modules

56889RED

56889RED 10
200-250V NEON
RED

BS 5733: 2010

Data/Telecom Enclosures Euro Format

IP66

K56423GRY

K56423WHI

K56423BLK

K56423GRY 1
K56423WHI 1
K56423BLK 1
1 GANG
DATA ENCLOSURE
FOR 2 MODULE EURO OUTLET

2 data modules can be accommodated providing care is used to ensure that the cables are correctly routed through the outlet.
Fixing holes are for No.8 woodscrews (not supplied). Backbox has 4 x 20mm entries, 1 on each edge. Supplied with an earth terminal and a loop terminal in the backbox.

DIMENSIONS
160 x 117 x 89mm
IP66 to BS EN 60529:1992

Euro Data Modules

TELECOM

K5820WHI K5820BLK

K5821WHI K5821BLK

K5820WHI 5
K5820BLK 5
TELEPHONE MASTER
ONE MODULE
K5821WHI 5
K5821BLK 5
TELEPHONE
SECONDARY
ONE MODULE

DIMENSIONS
25 x 50mm
BS 6312-2

See Logic Plus page 46-48 for a full range of Euro modules

Masterseal Plus™

Euro Data Modules

DATA

Junction Boxes

30 AMP
IP66

Flush Mounting Frames

Flush Mounting Bezels

Conduit Entries

Accessories

K5844WHI

K5887WHI

K5887BLK

K56506GRY

K56506WHI
(COVER ON)

K56506WHI
(COVER OFF)

K56500GRY

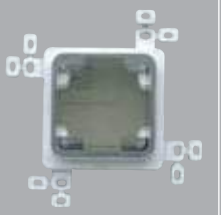
56500WHI

K56501GRY

K56502GRY

56502WHI

K56503GRY

56460WHI

56461WHI

56462WHI

56463WHI

56464WHI

MK9933

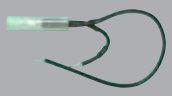
56890GRN

K5844WHI 5
RJ45 CAT 5e
ANGLED UNSCREENED
ONE MODULE

K5887WHI 5
K5887BLK 5
RJ11/12
ONE MODULE

K5844
Enhanced Cat 5e performance. Suitable for both 568A and 568B wiring schemes.

ISO/IEC 11801
EN 50173
TIA 568
EN 41003

K5887
Suitable for both RJ11 and RJ12 jacks
RJ11 4 wire
RJ12 6 wire

FCC68
EN 41003

DIMENSIONS
25 x 50mm

See Logic Plus page 46-48 for a full range of Euro modules

K56506GRY 1
K56506WHI 1
K56506BLK 1
JUNCTION BOX
WITH FOUR
4-WAY TERMINALS

Fixing holes are for No. 8 woodscrews (not supplied).
The enclosure has 4 entries, 1 on top, bottom and both sides.

TERMINAL CAPACITY
Each terminal block accepts four 2.5mm² cables.

DIMENSIONS
95 x 95 x 65mm
BS 6220:1983
IP66 to BS EN 60529

K56500GRY 1
K56500WHI 1
1 GANG
PLASTER/TILE FLUSH
MOUNTING FRAME WITH
PROTECTIVE COVER
FOR USE WITH
160 X 117MM PRODUCTS

56500GRY 1
56500WHI 1
1 GANG
PLASTER/TILE FLUSH
MOUNTING FRAME WITH
PROTECTIVE COVER
FOR USE WITH
95 X 95MM SWITCHES

K56501GRY 1
K56501WHI 1
2 GANG
PLASTER/TILE FLUSH
MOUNTING FRAME WITH
PROTECTIVE COVER

The Flush adaptors for plaster and tile can be used with finish depths up to 20mm, by using the spacers provided.Allows flush mounted Masterseal Plus™ products to maintain their IP rating.
Can be used with side entry or back entry enclosures.

DIMENSIONS
56500 115 x 115 x 34mm
K56500 135 x 135 x 34mm
K56501 135 x 195 x 34mm

K56502GRY 1
K56502WHI 1
1 GANG
FLUSH MOUNTING
BEZEL FOR USE WITH
160 X 117MM PRODUCTS

56502GRY 1
56502WHI 1
1 GANG
FLUSH MOUNTING
BEZEL FOR USE WITH
95 X 95MM SWITCHES

K56503GRY 1
K56503WHI 1
2 GANG
FLUSH MOUNTING BEZEL

The Flush adaptors for brick and cavity walls should be used on vertical surfaces where no additional finishing, such as plastering is required.
Allows flush mounted Masterseal Plus™ products to maintain their IP rating.
Can only be used with back entry enclosures.
Supplied with 4 self tapping screws to fix enclosure to mounting bezel.
Clip-on surround hides mounting screws.

DIMENSIONS
56502 145 x 145 x 41mm
K56502 165 x 165 x 41mm
K56503 165 x 245 x 41mm

56460GRY 5
56460WHI 5
ENTRY BLANK

56461BLK 5
56461WHI 5
PVC CABLE ENTRY
TO PROVIDE DIRECT
ENTRY OF POWER CABLE
TO THE UNIT VIA THE
BOTTOM BOX ENTRY

56462BLK 5
56462WHI 5
20MM PLAIN CONDUIT
ENTRY PUSH FIT
ADAPTOR BETWEEN
BACK BOX AND 20MM
PLAIN CONDUIT

56463BLK 5
56463WHI 5
20MM THREADED
CONDUIT ENTRY PUSH
FIT ADAPTOR BETWEEN
BACK BOX AND 20MM
THREADED CONDUIT

56464BLK 5
56464WHI 5
BOX COUPLER
FOR GANGING ONE
MASTERSEAL PLUS™
BOX NEXT TO ANOTHER

MK9933 1
M20 EARTH LEAD
ADAPTOR FOR EARTHING
METAL CONDUIT

56890GRN 5
REPLACEMENT
NEON LOCATOR

Masterseal Plus™

Echo™ is an innovative range of entirely wireless, batteryless and self-powered switches, only available from MK Electric

1 and 2 Channel Transmitter For Echo™

IP66

Enclosure

IP66

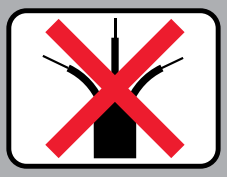

WIRELESS

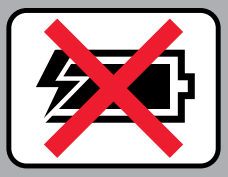

BATTERYLESS

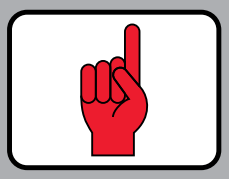

SELF-POWERED

K55400GRY

K55406WHI

K55406BLK

K55000GRY

WIRELESS

No wires offers the benefits of almost instant switch installation and total location flexibility, resulting in reduced costs and disruption as well as improved speed and ease of installation – invaluable for areas needing to rearrange space periodically, e.g. commercial offices, or those where the channelling of walls isn't permittable or feasible, such as historic buildings or glass partition walls.

BATTERYLESS

No batteries means low maintenance and low running costs. No need to buy, fit, replace or dispose of batteries, eliminating nuisance and waste for a more sustainable option.

SELF-POWERED

The new Echo™ range works by harvesting tiny amounts of ambient energy which power a switch (Transmitter) to send an RF signal to the Switch Receiver which is connected to the lighting circuit – operating lighting at ranges of up to 30 metres within typical buildings.

K55400GRY	1	**K55000GRY**	1
K55400WHI	1	**K55000WHI**	1
K55400BLK	1	**K55000BLK**	1

1 CHANNEL TRANSMITTER FOR ECHO™

K55406GRY	1
K55406WHI	1
K55406BLK	1

2 CHANNEL TRANSMITTER FOR ECHO™

See page 29 for a full range of Echo™ receivers and accessories

No wires
- Instant switch installation
- Location/relocation flexibility
- Simplifies office 'churn' – less disruption

No batteries
- Low maintenance
- Low running costs
- Less waste, a more sustainable option
- No nuisance factor

Flexibility
- No wires, no constraints
- Suitable for all wall types, including where channelling isn't feasible
- Ideal for commercial, residential and historic buildings

Quality reliability and safety come as standard

10 year guarantee

COMMANDO SAFETYSWITCH

RANGE INTRODUCTION

Commando Safetyswitches are manufactured from Polybutylene Terephthalate (PBT) for maximum impact resistance.

The range offers a selection of IP54 and IP65 ratings to cover a variety of indoor and outdoor needs. The units are lockable for added safety and accept auxiliary contacts to increase further the range of applications.

A range of Triple Pole and Neutral switches are also available, manufactured from Polycarbonate (PC).

FEATURES & BENEFITS

IMPACT RESISTANT

PBT and PC enclosures provide remarkable impact resistance

WATER RESISTANT

IP54, IP65 and IP66 ratings mean Commando Safetyswitch and Triple Pole and Neutral switches are suitable for outdoor and indoor use

ADDED SAFETY

Commando Safetyswitches have mechanically interlocked lids meaning the cover is impossible to remove when the switch is in the 'ON' position

HOW TO SPECIFY

A range of industrial "Commando" triple pole and neutral Safety Switches designed to provide IP65 ingress protection. Product case must be interlocked to ensure that the case cannot be opened while the switch is in the "ON" position. All switches are to have Neutral and earth terminals fitted as standard and have I.S.O. metric conduit entries for ease of installation.

Commando Safetyswitch

Commando Safetyswitches

I.S.O. metric conduit entries for ease of installation

Neutral and Earth terminals fitted as standard

PBT enclosure offers remarkable impact resistance

Choice of units splashproof to IP54 and IP65 for use indoors or outdoors

Direct acting operating handle gives positive indication of the state of the contacts

63A, 100A and 125A units have mechanically operated lids for additional safety in use. This means the cover is impossible to remove when the switch is in the 'ON' position

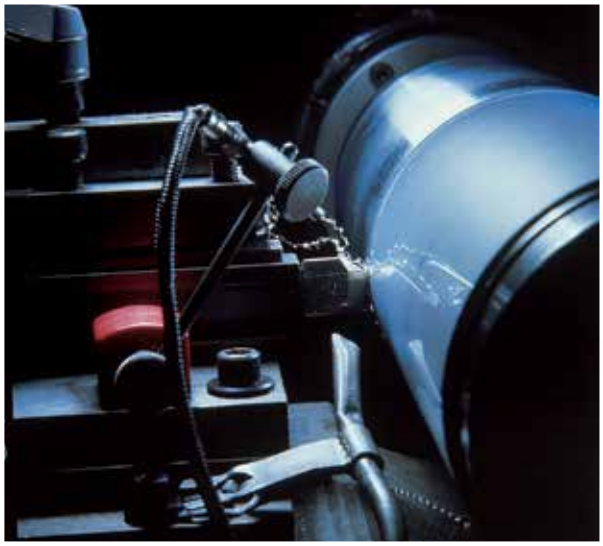

Switch Disconnectors

16 AMP (Ith)
3 POLE
IP65

25 AMP (Ith)
3 POLE
IP65

K6816

K6825

K6816YEL

K6825YEL

K6816 5
K6816YEL 5
UTILISATION CATEGORY
AC23A RATED OPERATIONAL:
CURRENT (**Ie**) 10A
VOLTAGE (Ue) 415V 50/60 HZ
POWER 5.5 KW

IP RATING
K6816 IP65
K6816YEL IP65
Supplied with blanking plugs and neutral terminals
TERMINAL CAPACITY
1.5 - 4mm²
CONDUIT ENTRY
4 x M20
K6816
Auxiliary contacts
List No: 6818 and 6819
Will accept one auxiliary contact.
K6816YEL
Auxiliary contact included.
BS EN 60947-3:2009

K6825 5
K6825YEL 5
UTILISATION CATEGORY
AC23A RATED OPERATIONAL:
CURRENT (**Ie**) 20A
VOLTAGE (Ue) 415V 50/60 HZ
POWER 11 KW

IP RATING
K6825 IP65
K6825YEL IP65
Supplied with blanking plugs and neutral terminals
TERMINAL CAPACITY
1.5 - 4mm²
CONDUIT ENTRY
4 x M20
K6825
Auxiliary contacts
List No: 6818 and 6819
Will accept one auxiliary contact.
K6825YEL
Auxiliary contact included.
BS EN 60947-3:2009

Commando Safetyswitch

Switch Disconnectors

25 AMP (Ith)
6 POLE
IP65

K6725

K6725YEL

40 AMP (Ith)
3 POLE
IP65

K6840

K6840YEL

63 AMP (Ith)
3 POLE
IP54 and IP65

6863

6863YEL

K6725 1
K6725YEL 1
UTILISATION CATEGORY
AC23A RATED OPERATIONAL:
CURRENT (**Ie**) 20A
VOLTAGE (Ue) 415V 50/60 HZ
POWER 11 KW

IP RATING
K6725 IP65
K6725YEL IP65
Supplied with blanking plugs and neutral terminals
TERMINAL CAPACITY
1.5 – 4mm²
CONDUIT ENTRY
4 x M20
2 x 18mm knockouts
K6725
Auxiliary contacts
List No: 6818 and 6819
Will accept one auxiliary contact.
K6725YEL
Auxiliary contact included.
BS EN 60947-3:2009

K6840 1
K6840YEL 1
UTILISATION CATEGORY
AC23A RATED OPERATIONAL:
CURRENT (**Ie**) 25A
VOLTAGE (Ue) 415V 50/60 HZ
POWER 15 KW

IP RATING
K6840 IP65
K6840YEL IP65
Supplied with blanking plugs and neutral terminals
TERMINAL CAPACITY
1.5 – 10mm²
CONDUIT ENTRY
4 x M25
K6840
Auxiliary contacts
List No: 6818 and 6819
Will accept one auxiliary contact.
K6840YEL
Auxiliary contact included.
BS EN 60947-3:2009

K6863 1
K6863YEL 1
UTILISATION CATEGORY
AC23A RATED OPERATIONAL:
CURRENT (**Ie**) 45A
VOLTAGE (Ue) 415V 50/60 HZ
POWER 22 KW

IP RATING
6863 IP54
6863YEL IP65
Supplied with blanking plugs and neutral terminals
TERMINAL CAPACITY
1.5 – 16mm²
CONDUIT ENTRY
4 x M32
2 x M16
6863
Auxiliary contacts
List No: 6813 or 6814
6863YEL
Auxiliary contact included.
BS EN 60947-3:2009

Commando Safetyswitch

Triple Pole And Neutral Switches

4 POLE
IP66

2 POLE
IP66

Auxiliary Contacts

Accessories

M4413

M4417

6813

MK9933

6814

M4414

M4418

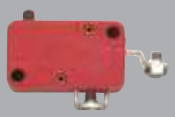
6817

6810

6818

6819

M4413 1
4 POLE
UTILISATION CATEGORY
AC23A RATED OPERATIONAL:
CURRENT (**Ie**) 32A
VOLTAGE (Ue) 240/415V 50/60 HZ
POWER 11 KW

M4414 1
4 POLE
UTILISATION CATEGORY AC23A RATED OPERATIONAL:
CURRENT (**Ie**) 20A
VOLTAGE (Ue) 240/415V 50/60 HZ
POWER 7.5 KW

TERMINAL CAPACITY
16mm² (Rigid stranded cable)
CONDUIT ENTRY
2 x 25mm cable entry top and bottom. Supplied with 2 x 25mm conduit adaptors.
4 x 20mm, 2 x 25mm knockouts for rear cable entry.
BS EN 60947-3:2009

M4417 1
2 POLE
UTILISATION CATEGORY
AC23A RATED OPERATIONAL:
CURRENT (**Ie**) 32A
VOLTAGE (Ue) 240V 50/60 HZ
POWER 5.5 KW

M4418 1
2 POLE
UTILISATION CATEGORY
AC23A RATED OPERATIONAL:
CURRENT (**Ie**) 20A
VOLTAGE (Ue) 240V 50/60 HZ
POWER 3.75 KW

6813 10
16A (Ith) SINGLE POLE
NORMALLY OPEN
4A OPERATIONAL CURRENT (**Ie**)

6814 10
16A (Ith) SINGLE POLE
NORMALLY CLOSED
4A OPERATIONAL CURRENT (**Ie**)

6817 10
10A (Ith) SINGLE POLE
NORMALLY OPEN
1.5A OPERATIONAL CURRENT (**Ie**)

6818 10
10A (Ith) SINGLE POLE
NORMALLY OPEN,
6A OPERATIONAL CURRENT (**Ie**)
AC15 @ 230V

6819 10
10A (Ith) SINGLE POLE
NORMALLY CLOSED, 6A
OPERATIONAL CURRENT (**Ie**)
AC15 @ 230V

MK9933 1
EARTH LEAD ADAPTOR
M20 X 1.5 / M20 X 1.5 THREAD
SIZE FOR 16A & 25A
SAFETYSWITCHES

6810 10
SHACKLE FOR UP TO 6 PADLOCKS

M4413, M4414, M4417, M4418 ENCLOSURES ARE POLYCARBONATE
Polycarbonate enclosures provide extremely high levels of impact resistance. Some chemicals and synthetic oils can harm polycarbonate. Call technical hotline for further information.

COMMANDO

RANGE INTRODUCTION

Commando offers a comprehensive range of industrial plugs, connectors, socket outlets, appliance inlets, Combi and Modular-Combi units.

The Commando range is designed to meet all relevant European and British Standards, whilst offering remarkable impact strength and an excellent choice of ingress protection ratings. Outstanding temperature performance and good resistance to chemicals make it ideal for the most arduous applications. Contact pins and sleeves are of solid brass with stainless steel springs to keep contacts free of dirt and to ensure constant contact pressure.

HOW TO SPECIFY

A range of industrial "Commando" industrial plugs, connectors, sockets and switches designed to provide IP44 & IP67 ingress protection. Products to have outstanding temperature performance and resistance to chemicals to ensure operation in arduous applications. All sockets to have self cleaning contacts and nickel plated pins to provide resistance to humidity and wear. Cable entry must be secured via a cable clamp that applies pressure to the cable for the lifetime of the product. Products must have prolonged earth pole connections to ensure that earth terminals are last to disconnect. Terminals to be clearly identified and have terminal screws backed out to provide fast and easy installation.

FEATURES & BENEFITS

RELIABILITY

Features like the calibrated contact sleeves with stainless steel springs, brass screws in brass contacts ,and the double earthing screws – all mean that this plug or socket will perform better and longer in difficult conditions.

ERGONOMIC DESIGN

All edges and corners are rounded to remove sharp edges. Cable protection is improved. New design offers a better and more comfortable grip for connection / disconnection.

CABLE GLAND

Every product across the range has a new cable clamp with an improved locking mechanism that will apply pressure to the cable for the lifetime of the product.

EASY WIRING

All screws are backed out and retained. Twin contact earth screws.

OUTSTANDING TEMPERATURE PERFORMANCE

Successful operation guaranteed between -25°C and 55°C.

Commando

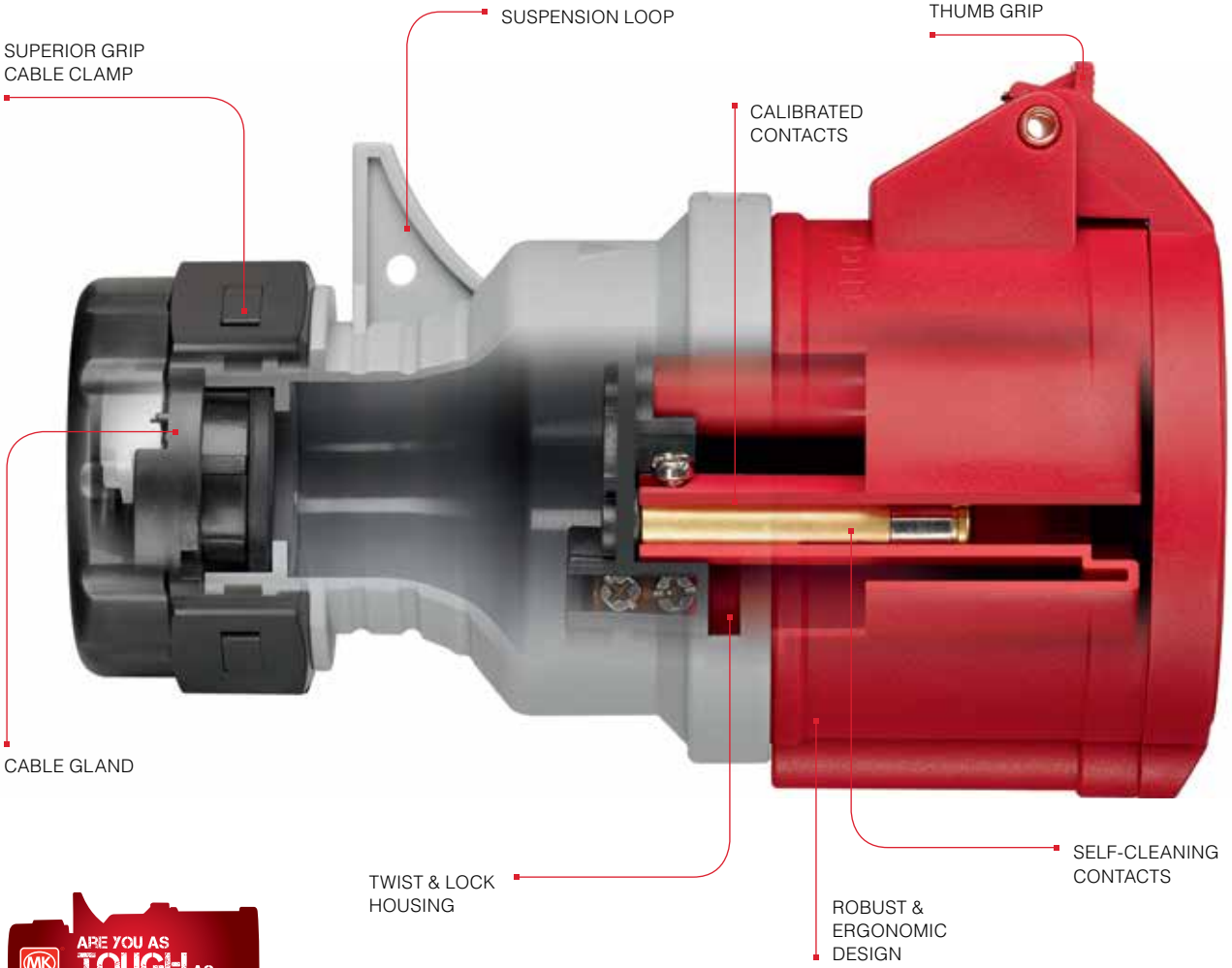

HIGH QUALITY MATERIALS

The Commando range offers remarkable impact strength.

Outstanding temperature performance and good resistance to chemicals make it ideal for the arduous applications.

CONNECTION SEAL

Prevent accidental disconnection or theft of equipment.

TIGHT AND SECURE

The cable gland has an improved locking mechanism that will apply pressure to the cable for the lifetime of the product.

PROLONGED EARTH CONNECTION

The earth connection is specifically designed, so that in the unlikely event of failure of the cable gland and the wires detach from the terminals the earth terminal will be the last to disconnect.

For extra protection the earth terminal is provided with 2 connection screws.

SUSPENSION LOOP

Products can be suspended above the floor, helping to keep the workspace in order.

QUICK AND EASY TO USE

Clear markings and terminal identification.

Clear instructions for cable strip length, tightening torque and opening of the product.

Commando

IP44 SPLASHPROOF 100-130V 50-60 HZ

Plugs

Connectors

Socket Outlets

ANGLED SURFACE

STRAIGHT PANEL MOUNTING

SURFACE – LOOP IN

Amps	Pin. Config-uration	Earth					
16	2P+E	4	**K9000YEL**	**K9100YEL**	**K9200YEL**	**K9400YEL**	**K13300YEL**
32	2P+E	4	**K9032YEL**	**K9132YEL**	**K9232YEL**	**K9432YEL**	**K13232YEL**
			Fitted with cable entry seal. BS EN 60309	Fitted with cable entry seal. BS EN 60309	**16A** Top conduit (M20) or rear cable entry, complete with blanking plug. **32A** Top conduit (M25) or rear cable entry, complete with blanking plug. BS EN 60309	All flanges have the same fixing centres and outside dimensions to assist panel builders. BS EN 60309	Suitable for top entry 1 x M20 and 1 x M25 or bottom entry 1 x M20 and 1 x M25 BS EN 6030

IP67 WATERTIGHT 100-130V 50-60 HZ

Plugs

Connectors

Socket Outlets

ANGLED SURFACE

PANEL MOUNTING

SURFACE – LOOP IN

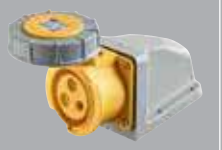
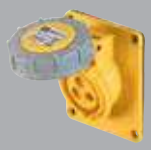

Amps	Pin. Config-uration	Earth					
16	2P+E	4	**K9023YEL**	**K9123YEL**	**K9193YEL**	**K9802YEL**	**K13323YEL**
32	2P+E	4	**K9053YEL**	**K9155YEL**	**K9761YEL**		**K13303YEL**
			Suitable for flexible cable only. BS EN 60309	Suitable for flexible cable only. BS EN 60309	16A Top conduit (M20) or rear cable entry, complete with blanking plug. 32A Top conduit (M25) or rear cable entry, complete with blanking plug BS EN 60309	All flanges have the same fixing centres and outside dimensions to assist panel builders BS EN 60309	Suitable for top entry 1 x M20 and 1 x M25 or bottom entry 1 x M20 and 1 x M25 BS EN 60309

Switchsocket Outlets

ANGLED
INTERLOCKED
SURFACE

Amps	Pin. Config-uration	Earth	
16	2P+E	4	**K73600YEL**
32	2P+E	4	**K13632YEL**

Switch can be locked in open or closed position.
Suitable for top entry 1 x M20 and 1 x M25 or bottom entry 1 x M20 and 1 x M25
BS EN 60309

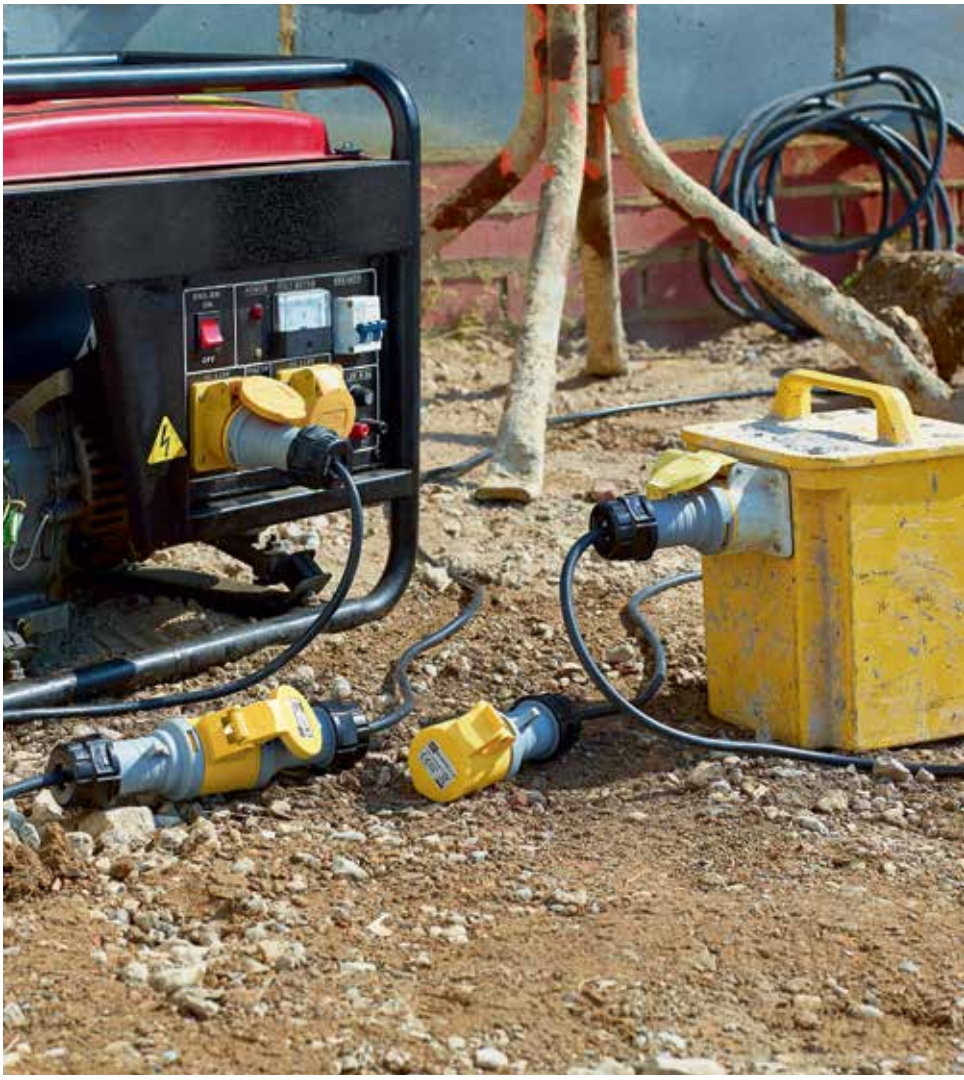

Switchsocket Outlets

ANGLED
INTERLOCKED
SURFACE

Amps	Pin. Config-uration	Earth	
16	2P+E	4	**K73623YEL**
32	2P+E	4	**K13653YEL**

Switch can be locked in open or closed position.
Suitable for top entry 1 x M20 and 1 x M25 or bottom entry 1 x M20 and 1 x M25
BS EN 60309

Commando

IP44 SPLASHPROOF 200 - 250V 50 - 60 HZ

Plugs

Connectors

Socket Outlets

ANGLED SURFACE

SURFACE-LOOP IN

STRAIGHT PANEL MOUNTING

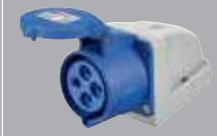

Amps	Pin. Config-uration	Earth	Plugs	Connectors	Socket Outlets: ANGLED SURFACE	Socket Outlets: SURFACE-LOOP IN	Socket Outlets: STRAIGHT PANEL MOUNTING
16	2P+E	6	**K9001BLU**	**K9101BLU**	**K9201BLU**	**K13301BLU**	**K9401BLU**
16	3P+E	9	**K9006BLU**	**K9106BLU**	**K9206BLU**		
16	3P+N+E	9	**K9014BLU**	**K9114BLU**	**K9214BLU**		
32	2P+E	6	**K9033BLU**	**K9133BLU**	**K9233BLU**	**K13333BLU**	**K9433BLU**
32	3P+E	9	**K9036BLU**	**K9136BLU**	**K9236BLU**		
32	3P+N+E	9	**K9044BLU**	**K9143BLU**	**K9240BLU**		
63	2P+E	6	**K9063BLU**	**K9172BLU**	**K9274BLU**		**K9472BLU**
			16A/32A Fitted with cable entry gland. **63A** Fitted with cable entry gland BS EN 60309	**16A/32A** Fitted with cable entry gland. **63A** Fitted with cable entry gland BS EN 60309	**16A** Top conduit (M20) or rear cable entry, complete with blanking plug. **32A** Top conduit (M25) or rear cable entry, complete with blanking plug. **63A** Top conduit (M32) or rear cable entry, complete with blanking plug BS EN 60309	Suitable for top entry 1 x M20 and 1 x M25 or bottom entry 1 x M20 and 1 x M25 BS EN 60309	**16/32A** All flanges have the same fixing centres and outside dimensions to assist panel builders BS EN 60309

Plugs

Connectors

Socket Outlets

ANGLED SURFACE

SURFACE – LOOP IN

Amps	Pin. Config-uration	Earth	Plugs	Connectors	Socket Outlets: ANGLED SURFACE	Socket Outlets: SURFACE – LOOP IN
16	2P+E	6	**K9024BLU**	**K9124BLU**	**K9194BLU**	**K13024BLU**
16	3P+E	6	**K9081BLU**	**K9082BLU**	**K9083BLU**	
32	2P+E	6	**K9054BLU**	**K9156BLU**	**K9762BLU**	**K13054BLU**
32	3P+E	6				
63	2P+E	6	**K9298BLU**	**K9856BLU**	**K9857BLU**	
			Suitable for flexible cable only 63A. With external clamp BS EN 60309	Suitable for flexible cable only 63A. With external clamp BS EN 60309	Suitable for top entry 2 x M25 or bottom entry 2 x M20. Will accept FL13 flange at top BS EN 60309	Suitable for top entry 1 x M20 and 1 x M25 or bottom entry 1 x M20 and 1 x M25 BS EN 60309

Photographs feature the most representative products. Design changes may occur (over different current ratings) from one product to another.

Commando

Amps	Pin. Configuration	Earth	ANGLED PANEL MOUNTING	Switchsocket Outlets ANGLED INTERLOCKED SURFACE	Appliance Inlets ANGLED SURFACE
16	2P+E	6	**K9771BLU**	**K73601BLU**	**K9701BLU**
16	3P+E	9		**K9601BLU**	
16	3P+N+E	9		**K9607BLU**	
32	2P+E	6	**K9774BLU**	**K73633BLU**	**K9733BLU**
32	3P+E	9		**K9633BLU**	
32	3P+N+E	9		**K9639BLU**	
63	2P+E	6		**K9306BLU**	
			16/32A new range has different fixing centres to old range. Old range is available for limited period. See technical section for details BS EN 60309	Switch can be locked in open or closed position. Suitable for top entry 2 x M32 or 2 x M40 or bottom entry 2 x M32 or 2 x M40 BS EN 60309	**16A** Top conduit (M20) or rear cable entry, complete with blanking plug. **32A** Top conduit (M25) or rear cable entry, complete with blanking plug BS EN 60309

Amps	Pin. Configuration	Earth	Switchsocket Outlets ANGLED INTERLOCKED SURFACE
16	2P+E	6	**K73624BLU**
16	3P+E	9	
32	2P+E	6	**K73654BLU**
32	3P+E	9	
63	2P+E	6	
			Switch can be locked in open or closed position. Suitable for top entry 1 x M20 and 1 x M25 or bottom entry 1 x M20 and 1 x M25 BS EN 6030

Commando

IP44 SPLASHPROOF 380 - 415V 50 - 60 HZ

Amps	Pin. Configuration	Earth	Plugs	Connectors	Socket Outlets ANGLED SURFACE	Socket Outlets STRAIGHT PANEL MOUNTING
16	3P+E	6	**K9007RED**	**K9107RED**	**K9207RED**	**K9407RED**
16	3P+N+E	6	**K9015RED**	**K9115RED**	**K9215RED**	**K13315RED**
32	3P+E	6	**K9037RED**	**K9137RED**	**K9237RED**	**K9437RED**
32	3P+N+E	6	**K9045RED**	**K9144RED**	**K9241RED**	**K9445RED**
63	3P+E	6	**K9066RED**	**K9165RED**	**K9265RED**	
63	3P+N+E	6	**K9071RED**	**K9170RED**	**K9269RED**	**K9470RED**
			16A/32A Fitted with cable entry gland. **63A** Fitted with cable entry gland. Thread size M48 BS EN 60309	**16A/32A** Fitted with cable entry gland. **63A** Fitted with cable entry gland. Thread size M48 BS EN 60309	**16A** Top conduit (M20) or rear cable entry, complete with blanking plug. **32A** Top conduit (M25) or rear cable entry, complete with blanking plug. **63A** Top conduit (M32) or rear cable entry, complete with blanking plug. BS EN 60309	**16/32A** All flanges have the same fixing centres and outside dimensions to assist panel builders BS EN 60309

IP67 WATERTIGHT 380 - 415V 50 - 60 HZ

Amps	Pin. Configuration	Earth	Plugs	Connectors	Socket Outlets ANGLED SURFACE	Switchsocket Outlets ANGLED INTERLOCKED SURFACE
16	3P+E	6	**K9025RED**	**K9125RED**	**K9763RED**	**K13625RED**
16	3P+N+E	6	**K9026RED**	**K9126RED**	**K9764RED**	**K73626RED**
32	3P+E	6	**K9055RED**	**K9157RED**	**K9765RED**	**K13655RED**
32	3P+N+E	6	**K9056RED**	**K9158RED**	**K9766RED**	**K73656RED**
63	3P+E	6	**K9282RED**	**K9842RED**	**K9858RED**	**K9432RED**
63	3P+N+E	6	**K9292RED**	**K9852RED**	**K9859RED**	**K73658RED**
			Suitable for flexible cable only. BS EN 60309	Suitable for flexible cable only. BS EN 60309	2 x 29/37mm knockouts (top), 1 x Ø29 and 1 x Ø23 knockout (bottom). Will accept FL13 flanges top and bottom BS EN 60309	Switch can be locked in open or closed position. Suitable for top entry 2 x M32 or 2 x M40 or bottom entry 2 x M32 or 2 x M40 BS EN 60309

All products are available in minimum order quantity of one.
Photographs feature the most representative products.
Design changes may occur (over different current ratings) from one product to another.

Switchsocket Outlets

ANGLED
INTERLOCKED
SURFACE

Amps	Pin. Config-uration	Earth	
16	3P+E	6	**K13607RED**
16	3P+N+E	6	**K73615RED**
32	3P+E	6	**K13637RED**
32	3P+N+E	6	**K73641RED**
63	3P+E	6	**K9665RED**
63	3P+N+E	6	**K73643RED**

Switch can be locked in open or closed position.
Suitable for top entry 2 x M32 or 2 x M40 or bottom entry 2 x M32 or 2 x M40
BS EN 60309

Commando

Protective Covers For Inlets

Earth Lead Adaptors and Blanking Plugs

9960BLK

MK9933

MK9934

9960BLK 1
FOR 2P+E, 16A
NO 125A OFFERING

9966BLK 1
2P+E, 3P+E, 32A

9967BLK 1
FOR ALL 63A (IP44)

MK9933 1
M20 X 1.5/ M20 X 1.5 THREAD SIZE
USED ON ALL 16A SOCKET OUTLETS
AND APPLIANCE INLETS (EXCEPT
INTERLOCKED). ALSO USED ON
16A AND 25A SAFETYSWITCHES

MK9934 5
M25 X 1.5/ M25 X 1.5 THREAD SIZE
USED ON ALL 32A SOCKET OUTLETS AND
APPLIANCE INLETS (EXCEPT INTERLOCKED)

9936 5
PG21/ M25 X 1.5 THREAD SIZE
USED ON 16A & 32A INTERLOCKED
SWITCHSOCKET OUTLETS

MK9937 5
M32 X 1.5/ M32 X 1.5 THREAD SIZE
USED ON ALL 63A SOCKET OUTLETS AND
APPLIANCE INLETS

MK9937 must not be used on installations that are rated above 63A.

Commando Industrial Plugs and Sockets

By referring to the chart below, it can be seen that there can be no interchangeability of products as the earth socket tube is placed in a different 'clock' position according to the voltage and frequency. This clock position is determined by looking into a socket-outlet from the front with the key-way at the bottom.

Unless otherwise stated all frequencies are 50-60Hz.

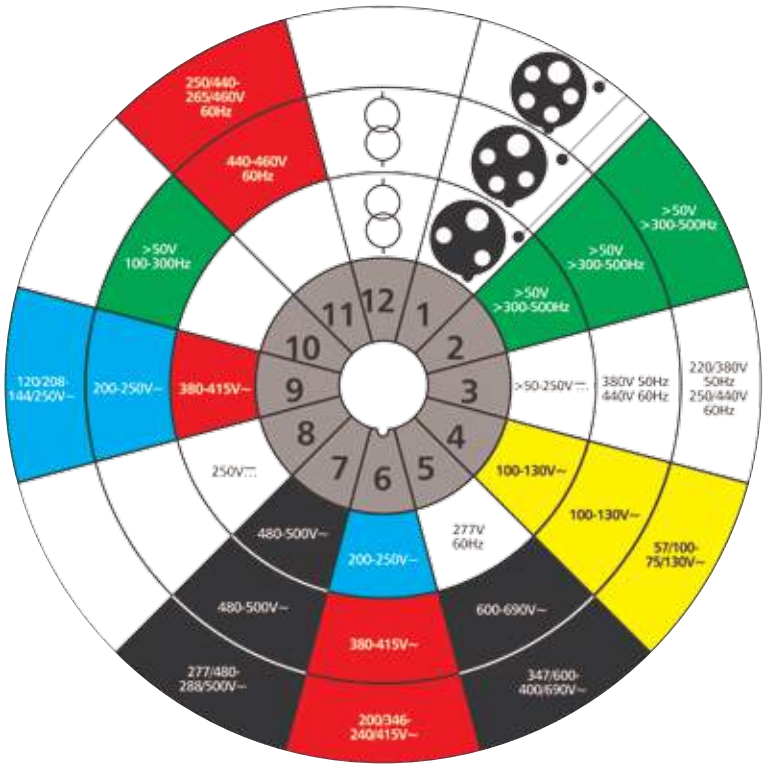

RATING CODE

The rating code which is found on the rating label of each accessory gives details of rated current, rated (operating) voltage (or range of voltages), rated frequency (if not 50/60Hz) and a symbol to indicate the position of the earth contact.

(i) For all products (except extra low voltage) the position given is that of the earth pin when a socket-outlet/connector is viewed from the front with the key-way at the bottom. When viewing a plug/ appliance inlet from the front with the key at the bottom, the position of the earth pin is reversed, ie., a 10 o'clock will appear at 2 o'clock and other positions are relative.

COMMANDO COMBI™

RANGE INTRODUCTION

Commando Combi units offer RCD protection in hazardous environments.

Enclosed in PC and ABS boxes, these units offer protection against high impact and are available in IP44 (Splashproof) or IP67 (Watertight), making Commando Combination units some of the safest products available.

FEATURES & BENEFITS

- High Impact Protection to IK08
- Available in either IP44 (Splashproof) or IP67 (Watertight) options
- Pre-designed, factory built option

HOW TO SPECIFY

An industrial range of IP44 & IP67 ingress protected "Commando" combination units designed to provide RCD protection in hazardous environments. Options must be available for a maximum of three Commando sockets. Products must have outstanding temperature performance and resistance to chemicals to ensure operation in arduous applications. All sockets to have self-cleaning contacts and nickel plated pins to provide resistance to humidity and wear. Terminals to be clearly identified and have terminal screws backed out to provide ease of installation.

Commando Combi™

TOUGH AND IMPACT RESISTANT TO IK08

OPTIONAL RCD PROTECTION

LOCKABLE LID

GOOD CHEMICAL RESISTANCE

IP44 PRE-CONFIGURED SOCKET OUTLETS (IP67 AVAILABLE UPON REQUEST CONTACT TECHNICAL HOTLINE ON +44 (0)1268 563720)

CUSTOM DESIGNED, FACTORY BUILT OPTION AVAILABLE
CONTACT TECHNICAL HOTLINE ON +44 (0)1268 563720
SEE PAGE 268.

Socket outlet selection includes 16A, 32A and 63A angled socket outlets across all relevant voltages.

IP44 and IP67 waterproof socket and switchsocket outlets.

Commando Combi™

IP44 SPLASHPROOF 100 - 130V 50 - 60 HZ

Socket Outlets

SINGLE PRE-WIRED WITH 30mA RCD

TWIN PRE-WIRED WITH 30mA RCD INDIVIDUALLY PROTECTED

ANGLED TWIN SURFACE PRE-WIRED

Switchsocket Outlet

INTERLOCKED PRE-WIRED WITH 30mA RCD

IP44

Amps	Pin. Configuration	Earth	Socket Outlets			Switchsocket Outlet
16	2P+E	4	K13413YEL	K73173YEL	K73143YEL	K13309YEL
32	2P+E	4				K13342YEL
			Suitable for top entry 2 x 25mm	Suitable for top entry 2 x ø25 / 2 x ø38 bottom entry 3 x 47.5mm	Suitable for top entry 2 x ø25 / 2 x ø38 bottom entry 3 x 47.5mm	Suitable for top entry 2 x ø25

IP44 SPLASHPROOF 200 - 250V 50 - 60 HZ

Socket Outlets

SINGLE PRE-WIRED WITH 30mA RCD

ANGLED TWIN SURFACE PRE-WIRED

Switchsocket Outlet

INTERLOCKED PRE-WIRED WITH 30mA RCD

IP44

Amps	Pin. Configuration	Earth	Socket Outlets		Switchsocket Outlet
16	2P+E	6	K73414BLU	K73174BLU	K73310BLU
63	2P+E	6	K73463BLU		K13343BLU
			Suitable for top entry 2 x 25mm	Suitable for top entry 2 x Ø25 / 2 x Ø38 Bottom entry 3 x 47.5mm	Suitable for top entry 2 x 25mm

IP44 SPLASHPROOF 380 - 415V 50 - 60 HZ

Socket Outlets

SINGLE PRE-WIRED WITH 30mA RCD

SINGLE PRE-WIRED WITH SINGLE 30mA RCD

Switchsocket Outlet

INTERLOCKED PRE-WIRED WITH 30mA RCD

IP44

Amps	Pin. Configuration	Earth	Socket Outlets		Switchsocket Outlet
16	3P+E	6	K13415RED		K13311RED
16	3P+N+E	6	K13416RED		K13312RED
32	3P+E	6	K13434RED		K13344RED
32	3P+N+E	6	K73435RED		K13345RED
63	3P+N+E	6		K73465RED	
			16/32A Suitable for top entry 2 x 25mm	Suitable for top entry 2 x Ø25 / 2 x Ø38 Bottom entry 3 x 47.5mm	Suitable for top entry 2 x 25mm

Commando Combi™

IP67 WATERTIGHT 100 - 130V 50 - 60 HZ

Socket Outlet
SINGLE
PRE-WIRED WITH
30mA RCD

Switchsocket Outlet
INTERLOCKED
PRE-WIRED WITH
30mA RCD

Amps	Pin. Config-uration	Earth	Socket Outlet	Switchsocket Outlet
16	2P+E	4	K13713YEL	K13346YEL
32	2P+E	4	K73718YEL	
			Suitable for top entry 2 x ø25	Suitable for top entry 2 x ø25

IP67 WATERTIGHT 200 - 250V 50 - 60 HZ

Socket Outlet
SINGLE
PRE-WIRED
WITH
30mA RCD

Switchsocket Outlet
INTERLOCKED
PRE-WIRED WITH
30mA RCD

Amps	Pin. Config-uration	Earth	Socket Outlet	Switchsocket Outlet
16	2P+E	6	K73714BLU	K13348BLU
16	3P+E	9		
32	2P+E	6	K13733BLU	K13349BLU
			Suitable for top entry 2 x ø25	Suitable for top entry 2 x ø25

IP67 SPLASHPROOF 380 - 415V 50 - 60 HZ

Socket Outlet
SINGLE
PRE-WIRED WITH
30mA RCD

Switchsocket Outlet
INTERLOCKED
PRE-WIRED WITH
30mA RCD

Amps	Pin. Config-uration	Earth	Socket Outlet	Switchsocket Outlet
16	3P+E	6		
16	3P+N+E	6	K13716RED	K13351RED
32	3P+E	6		K13352RED
32	3P+N+E	6	K73735RED	K73353RED
			Suitable for top entry 2 x ø25	Suitable for top entry 2 x ø25

MODULAR COMBI™

RANGE INTRODUCTION

A custom design service for Commando Combi products offering circuit protection, control and data products for use in hazardous environments. Modular Combi units are made to order and designed for almost any application.

Enclosed in durable Polycarb and ABS boxes, these units offer protection against high impact and are available in both IP44 and IP67, making Commando Combination units some of the safest products available.

Please contact the Technical Helpline (01268 563720) for further details or email mk.technical@honeywell.com for assistance on options available to meet your application requirements.

HOW TO SPECIFY

An industrial range of IP44 & IP67 ingress protected "Commando" combination units designed to provide RCD protection in hazardous environments. Options must be available for a maximum of three Commando sockets, Masterseal and data connections. Products must have outstanding temperature performance and resistance to chemicals to ensure operation in arduous applications. All sockets to have self-cleaning contacts and nickel plated pins to provide resistance to humidity and wear. Terminals to be clearly identified and have terminal screws backed out to provide ease of installation.

FEATURES & BENEFITS

- Compact units replace outlets traditionally scattered around walls
- Combination of outlets with MCB and RCD protection
- High Impact Protection
- Custom design service to suit various applications

Modular Combi™

SUMMARY GUIDE

STEP 1 Choose your system type and number of Commando socket outlets

Rating	Pin Config.	SOCKET OUTLETS - STRAIGHT 100-130V	200-250V	380-415V	SOCKET OUTLETS - INTERLOCKED 100-130V	200-250V	380-415V
16A	2P+E	✓	✓		✓	✓	
16A	3P+E	✓	✓	✓			✓
16A	3P+N+E	✓	✓	✓			✓
32A	2P+E	✓	✓		✓	✓	
32A	3P+E			✓			✓
32A	3P+N+E		✓	✓			✓
63A	2P+E		✓				
63A	3P+E			✓			
63A	3P+N+E			✓			

STEP 2 Choose the type of circuit protection for the outlets

Rating	SWITCH DISCONNECTOR 2 POLE	4 POLE	MCB SINGLE POLE 6kA TYPE B	TYPE C	10kA TYPE B	TYPE C	TYPE D	MCB DOUBLE POLE TYPE B	TYPE C	TYPE D	MCB TRIPLE POLE TYPE B	TYPE C	TYPE D
16A			✓	✓	✓	✓	✓	✓	✓	✓	✓	✓	✓
25A													
32A			✓	✓	✓	✓	✓	✓	✓	✓	✓	✓	✓
40A													
63A	✓				✓	✓	✓	✓	✓	✓	✓	✓	✓
80A													
100A	✓												
125A	✓	✓											

Rating	SRCBO One Module SOLID NEUTRAL (30mA) 6kA TYPE B	RCD 110V DOUBLE POLE 10mA	30mA	RCD 230V DOUBLE POLE 10mA	30mA	RCD PULSATING 10mA	30mA	RCD 230/400V FOUR POLE 30mA
16A	✓	✓	✓	✓	✓	✓		
25A								✓
32A	✓		✓		✓		✓	
40A								✓
63A					✓			✓
80A					✓			
100A					✓			

STEP 3 Choose the Control Products

Rating	CONTACTORS ONE MODULE	TWO MODULE	THREE MODULE	TIME SWITCHES SYNCHRONOUS THREE MODULE	QUARTZ STABILISED THREE MODULE	SYNCHRONOUS ONE MODULE	DIGITAL ONE CHANNEL TWO MODULE	ONE MODULE	DIGITAL TWO CHANNEL TWO MODULE
16A				✓	✓	✓	✓	✓	✓
20A	✓	✓		✓	✓				

STEP 3 Choose the Control Products

MASTERSEAL

SOCKET OUTLETS 13AMP	16AMP	SWITCH ENCLOSURES	SWITCH MODULES 20AMP	10AMP
✓	✓	✓	✓	✓

Overall Dimensions

DIMENSIONS

HEIGHT		WIDTH	DEPTH (WITH VARIOUS PRODUCTS)	
1 ROW	228 MM	252MM	16A SKT OUTLET	139MM
2 ROW	358MM	252MM	32A SKT OUTLET	148MM
3 ROW	488MM	252MM	16A INTERLOCK	152MM
4 ROW	618MM	252MM	32A SKT OUTLET	161MM
5 ROW	748MM	252MM	63A SKT OUTLET	167MM
			MASTERSEAL SKT O/T, FCU & DATA	146MM
			MASTERSEAL SWITCH	135MM

STEP 4 Email mk.technical@honeywell.com for design and quotation prior to placing your order.

CASE STUDY

BROADMOOR HOSPITAL – BESPOKE PRODUCTS

The redevelopment of Broadmoor Hospital required bespoke wiring device plates that would not only be resilient, but maintain the highest levels of safety at all times.

The complexities of this application meant that only a specialist solution would suffice and the MK Design Service were able to provide an offering that met their requirements whilst still delivering unrivalled quality from a UK manufacturer.

SENTRY

RANGE INTRODUCTION

The Sentry range of Consumer Units from MK Electric has been stylishly designed to blend in with its environment. The curved lines and slim-line appearance mean it won't look out of place when installed in hallways, lounges or kitchens of new properties.

The expanded range includes a 21-module unit for larger installations and also a 4-module unit to cater for small one-off installations and extensions to existing ones.

The MK Electric Design Service offers a pre-assembly service for custom built boards with all devices fitted, busbars cut and fitted with devices, live and neutral cables terminated.

SUPPORTS 17TH EDITION AMENDMENT 3 COMPLIANCE

Full range of products to support compliance with the 17th Edition Amendment 3 of the Wiring Regulations, including Full Metal non-combustible enclosures for Consumer Units.

MK ELECTRIC DESIGN SERVICE FOR PRE-ASSEMBLED CONSUMER UNITS

Save time and money by specifying project requirements through the MK Electric Design Service. Pre-assembled custom built boards, with all devices pre-fitted with busbars and cables are available to suit any installation.

FLOATING BUSBAR SYSTEM

Gives maximum installation flexibility.

BROAD SELECTION OF PRE-ASSEMBLED SPLIT LOAD UNITS AVAILABLE

Suits a variety of applications and saves installation time.

HOW TO SPECIFY

A metal range of consumer unit and accessories (Switch's MCB's, RCD's & RCBO's) designed to comply to the 17th Edition Amendment 3 of the wiring regulations (BS 7671:2008). Consumer unit doors must be top hinged to ensure the door is closed when the unit is not in use. The base, lid & door of the consumer unit must be earthed to provide safe operation at all times. A floating busbar system to be employed to ensure maximum installation flexibility and acceptance of control devices. All consumer units must have a curved door to prevent dust collection and offer a unobtrusive appearance that blends into the environment. Backed out captive screws, removable DIN rails and sufficient wiring space are required to ensure ease of installation and maintenance.

Sentry

MK Sentry Consumer Unit Features and Benefits

NEW: Manufactured from Zintec Steel

Corrosion resistant material which ensures full compliance with 17th Edition Amendment 3

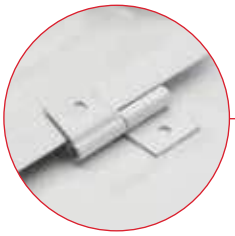

NEW: Top Hinged Door

Prevents door being left open after use leading to a possible fire risk

NEW: Multiple extra large knock outs

Aides and eases installation

NEW: Continual Earthing

Only need to earth once via the base

Curved Stylish Design

Blends into the environment

NEW: MK White Colour

Modernised aesthetics for visible installations.

Design service available for bespoke requests

Broad Selection Available

Suits a variety of applications

Sentry

Backed out and captive combi-head screws

Allows simple and speedy installation

Fixing holes

Tripod fixing to cope with uneven surfaces

NEW: 10mm Increased Height

Additional wiring space

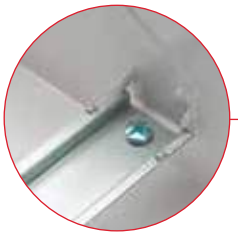

Easily removable Din Rail

Simplifying and easing first fix

Colour coded earth and neutral terminal locked

At top of unit for ease of wiring

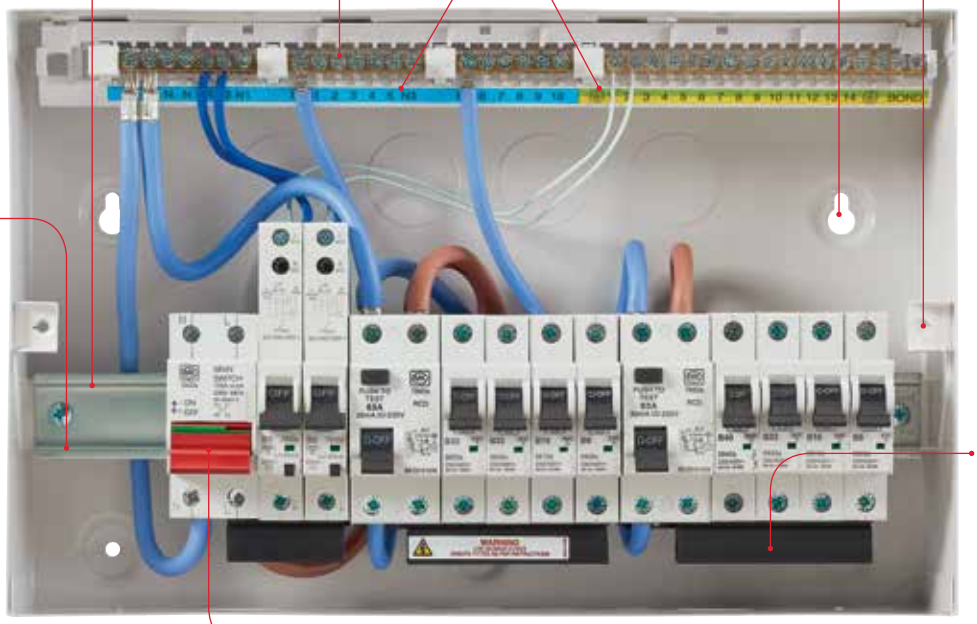

NEW: Supporting Din Rail "T" Bar

Additional support to prevent bowing and twisting which has been raised for improved cable routing

Floating busbar system

For maximum installation flexibility including acceptance of control modules

CONSUMER UNIT SELECTION GUIDE	
STEP 1	Determine the type of consumer unit configuration required. e.g Split Load, Standard or combination of split load / single RCD or dual RCD. For each Switch Disconnector or RCD to be used allow 2 modular ways.
STEP 2	Determine the number of outgoing circuits required. e.g Cooker, Lighting, Ring Main etc. For each circuit to be protected by an MCB or RCBO allow 1 modular way.
STEP 3	Determine what control products are required. e.g Bell Transformer, Time Delay Switch, contactors, timeswitches etc.
STEP 4	Determine the number of 'spare' modular ways required for future upgrades. For each 'spare' modular way select 1 Sentry blank module – 5544s or K5545sMAG (cover mounted blanks supplied with consumer units. See page 286).
STEP 5	Now add together the total number of modular ways required.
STEP 6	Select from our range of Insulated, Metal, Flush or stacked consumer units (using standard consumer units plus stacking kits). Choose the type and size most appropriate for your requirements.

Offset Incomer

Provides additional wiring space making mains input connections easier

Sentry

The MK Electric Design Service

THE MK ELECTRIC DESIGN SERVICE IS PERFECT FOR WHEN ONLY A CUSTOMISED SOLUTION CAN MEET YOUR REQUIREMENTS, OR WHEN FULLY ASSEMBLED CONSUMER UNITS CAN BE PROVIDED FOR YOUR PROJECT TO SAVE YOU INSTALLATION TIME.

Our dedicated team can help you to build the best configurations for your project, and then assemble the boards ready for installation. Using standard and non-standard Sentry components we can build and supply fully assembled units to an agreed design. For example, have your split load boards supplied with all the devices pre-fitted with busbars and cables to suit the installation This service is ideal for housing developers, or any project application*.

*Minimum order quantity of 20 of the same design

- Dedicated team on hand to build configuration to meet your needs
- Service is available for all MK Consumer Units
- Faster installation time on site
- Fast turnaround – 1 working day response time to initial enquiry

To find out more visit **www.mkelectric.co.uk** and follow the links to the **Design Service.**

STEP 1	Call the MK Electric Technical Services Team on 01268 563720 or email mk.technical@honeywell.com
STEP 2	Discuss the details of your project and circuit protection requirements with a member of the MK Technical Services Team or complete the online enquiry and click send
STEP 3	Within one working day you will have a response to your initial enquiry
STEP 4	Confirm the configurations and quantities
STEP 5	Receive the quote for your order
STEP 6	Place your order with your wholesaler
STEP 7	Your order will be delivered to the wholesaler of your choice. All boards will be fully assembled and ready for installation

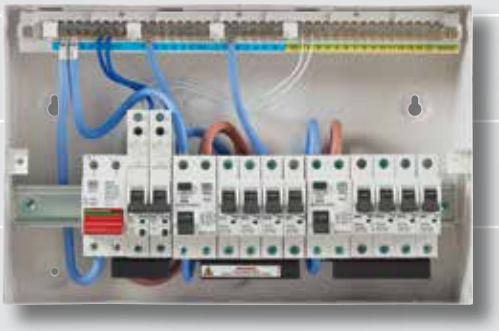

Consumer Units

METAL
ENCLOSURE ONLY
SURFACE

METAL
ENCLOSURE + SWITCH
DISCONNECTOR
SURFACE

K5604sMET

K5608sMET

K5612sMET

K5616sMET

K5621sMET

K5704sMET

K5708sMET

K5712sMET

K5716sMET

K5721sMET

K5604sMET 1
4 WAY ENCLOSURE
ACCEPTS 4 ONE MODULE PRODUCTS
(1 INTEGRAL NEUTRAL BAR)

K5608sMET 1
8 WAY ENCLOSURE
ACCEPTS 8 ONE MODULE PRODUCTS
(1 INTEGRAL NEUTRAL BAR)

K5612sMET 1
12 WAY ENCLOSURE
ACCEPTS 8 ONE MODULE PRODUCTS
(2 INTEGRAL NEUTRAL BARS FITTED WITH LINKS)

K5616sMET 1
16 WAY ENCLOSURE
ACCEPTS 16 ONE MODULE PRODUCTS
(3 INTEGRAL NEUTRAL BARS FITTED WITH LINKS)

K5621sMET 1
21 WAY ENCLOSURE
ACCEPTS 21 ONE MODULE PRODUCTS
(3 INTEGRAL NEUTRAL BARS FITTED WITH LINKS)

K5704sMET 1
4 WAY ENCLOSURE
100A SWITCH DISCONNECTOR
ACCEPTS A FURTHER 2 ONE MODULE PRODUCTS

K5708sMET 1
8 WAY ENCLOSURE
100A SWITCH DISCONNECTOR
ACCEPTS A FURTHER 6 ONE MODULE PRODUCTS

K5712sMET 1
12 WAY ENCLOSURE
100A SWITCH DISCONNECTOR
ACCEPTS A FURTHER 10 ONE MODULE PRODUCTS

K5716sMET 1
16 WAY ENCLOSURE
100A SWITCH DISCONNECTOR
ACCEPTS A FURTHER 14 ONE MODULE PRODUCTS

K5721sMET 1
21 WAY ENCLOSURE
100A SWITCH DISCONNECTOR
ACCEPTS A FURTHER 19 ONE MODULE PRODUCTS

All units are white coloured.
All units feature a robust galvanized metal base, lid & door.
The DIN rail embodies a useful alignment and fixing mechanism that allows quick installation.
Cable entry points are located on top, bottom, side and rear surfaces.

DIMENSIONS:	Width		Height		Depth
4 WAY	144	x	244	x	116mm
8 WAY	238	x	244	x	116mm
12 WAY	310	x	244	x	116mm
16 WAY	382	x	244	x	116mm
21 WAY	472	x	244	x	116mm

MAIN INCOMER RATING:
4 way enclosures: 63A
8, 12, 16 & 21 way enclosures: 100A
Degree of protection to BS EN 60529 to IP2XC.
Precautions must be taken to maintain the IP rating, e.g. Use of cable glands and knockouts.
BS EN 61439-3

All units are pre-fitted with a switch disconnector

DIMENSIONS:	Width		Height		Depth
4 WAY	144	x	244	x	116mm
8 WAY	238	x	244	x	116mm
12 WAY	310	x	244	x	116mm
16 WAY	382	x	244	x	116mm
21 WAY	472	x	244	x	116mm

MAIN INCOMER RATING:
4 way enclosures: 63A
8, 12, 16 & 21 way enclosures: 100A
Degree of protection to BS EN 60529 to IP2XC.
Precautions must be taken to maintain the IP rating, e.g. Use of cable glands and knockouts.
BS EN 61439-3

FACTORY BUILT SERVICE: MK can save you time and money by pre-assembling consumer units with your required Sentry components

Cover mounted blanks are supplied with ALL consumer units
(2 off x 1 for 4, 8 and 12 way enclosures and 2 off x 2 for 16 and 21 way enclosures)

Sentry

Consumer Units

SPLIT-LOAD
SINGLE RCD ARRANGEMENTS
METAL
SURFACE

SPLIT-LOAD
DUAL RCD ARRANGEMENTS
METAL
SURFACE

K5682sMET

K5662sMET

K5666sMET

K5687sMET

K5682sMET 1
12 WAY ENCLOSURE
100A SWITCH DISCONNECTOR
63A 30mA RCD
ACCEPTS A FURTHER 8 ONE MODULE PRODUCTS

K5689sMET 1
16 WAY ENCLOSURE
100A SWITCH DISCONNECTOR
63A 30mA RCD
ACCEPTS A FURTHER 12 ONE MODULE PRODUCTS

K5662sMET 1
12 WAY ENCLOSURE
100A SWITCH DISCONNECTOR
80A 30mA RCD
ACCEPTS A FURTHER 8 ONE MODULE PRODUCTS

K5685sMET 1
16 WAY ENCLOSURE
100A SWITCH DISCONNECTOR
80A 30mA RCD
ACCEPTS A FURTHER 12 ONE MODULE PRODUCTS

K5684sMET 1
21 WAY ENCLOSURE
100A SWITCH DISCONNECTOR
80A 30mA RCD
ACCEPTS A FURTHER 17 ONE MODULE PRODUCTS

K5666sMET 1
16 WAY ENCLOSURE
100A SWITCH DISCONNECTOR
2 X 63A 30mA RCD'S
ACCEPTS A FURTHER 10 ONE MODULE PRODUCTS

K5688sMET 1
16 WAY ENCLOSURE
100A SWITCH DISCONNECTOR
2 X 80A 30mA RCD'S
ACCEPTS A FURTHER 10 ONE MODULE PRODUCTS

K5686sMET 1
16 WAY ENCLOSURE
100A SWITCH DISCONNECTOR
1 X 63A & 1 X 80A 30mA RCD'S
ACCEPTS A FURTHER 10 ONE MODULE PRODUCTS

K5683sMET 1
21 WAY ENCLOSURE
100A SWITCH DISCONNECTOR
2 X 63A 30mA RCD'S
ACCEPTS A FURTHER 15 ONE MODULE PRODUCTS

K5687sMET 1
21 WAY ENCLOSURE
100A SWITCH DISCONNECTOR
2 X 80A 30mA RCD'S
ACCEPTS A FURTHER 15 ONE MODULE PRODUCTS

K5681sMET 1
21 WAY ENCLOSURE
100A SWITCH DISCONNECTOR
1 X 63A & 1 X 80A 30mA RCD'S
ACCEPTS A FURTHER 15 ONE MODULE PRODUCTS

All units are white coloured.
All units are pre-fitted with a switch disconnector and RCD together with all the necessary split-load cabling. The flexibility of design allows the RCD to be positioned to suit the required configuration of RCD protected and non-protected circuits, subject to the rating of either the switch or RCD not being exceeded. MK recommends the use of RCBO's for non RCD protected circuits to comply with the 17th Edition Amendment 3 Wiring Regulations.

DIMENSIONS:	Width		Height		Depth
4 WAY	144	x	244	x	116mm
8 WAY	238	x	244	x	116mm
12 WAY	310	x	244	x	116mm
16 WAY	382	x	244	x	116mm
21 WAY	472	x	244	x	116mm

MAIN INCOMER RATING:
4 way enclosures: 63A
8, 12, 16 & 21 way enclosures: 100A
Degree of protection to BS EN 60529 to IP2XC.
Precautions must be taken to maintain the IP rating, e.g. Use of cable glands and knockouts.
BS EN 61439-3

All units are white coloured.
All units are pre-fitted with a switch disconnector and RCD together with all the necessary split-load cabling. The flexibility of design allows the RCD to be positioned to suit the required configuration of RCD protected and non-protected circuits, subject to the rating of either the switch or RCD not being exceeded. MK recommends the use of RCBO's for non RCD protected circuits to comply with the 17th Edition Amendment 3 Wiring Regulations.

DIMENSIONS:	Width		Height		Depth
4 WAY	144	x	244	x	116mm
8 WAY	238	x	244	x	116mm
12 WAY	310	x	244	x	116mm
16 WAY	382	x	244	x	116mm
21 WAY	472	x	244	x	116mm

MAIN INCOMER RATING:
4 way enclosures: 63A
8, 12, 16 & 21 way enclosures: 100A
Degree of protection to BS EN 60529 to IP2XC.
Precautions must be taken to maintain the IP rating, e.g. Use of cable glands and knockouts.
BS EN 61439-3

FACTORY BUILT SERVICE: MK can save you time and money by pre-assembling consumer units with your required Sentry components

Cover mounted blanks are supplied with ALL consumer units
(2 off x 1 for 4, 8 & 2 way enclosures and 2 off x 2 for 16 & 21 way enclosures)

Sentry

FULLY POPULATED
ARRANGEMENTS
METAL
SURFACE

K6550sMET

K7673sMET

K6551sMET

K7663sMET

K7665sMET

K6552sMET

K7664sMET

K7666sMET

K7678sMET

K6550sMET 1
4 WAY ENCLOSURE
63A 30mA RCD
2 X MCB'S (1 X 6A & 1 X 16A)

K7663sMET 1
12 WAY ENCLOSURE
100A SWITCH DISCONNECTOR
63A 30mA RCD
6 X MCB'S (2 X 6A, 2 X 16A & 2 X 32A)
2 X RCBO'S (1 X 6A & 1 X 40A)

K7664sMET 1
12 WAY ENCLOSURE
100A SWITCH DISCONNECTOR
2 X 63A 30mA RCD'S
6 X MCB'S (2 X 6A, 1 X 16A, 2 X 32A & 1 X 40A)

K7673sMET 1
12 WAY ENCLOSURE
100A SWITCH DISCONNECTOR
6 X RCBO'S (2 X 6A, 1 X 16A, 2 X 32A & 1 X 40A)
ACCEPTS A FURTHER 4 ONE MODULE PRODUCTS

K7665sMET 1
16 WAY ENCLOSURE
100A SWITCH DISCONNECTOR
2 X 63A 30mA RCD'S
8 X MCB'S (2 X 6A, 2 X 16A, 3 X 32A & 1 X 40A)
ACCEPTS A FURTHER 2 ONE MODULE PRODUCTS

K7666sMET 1
16 WAY ENCLOSURE
100A SWITCH DISCONNECTOR
2 X 63A 30mA RCD'S
10 X MCB'S (3 X 6A, 2 X 16A, 4 X 32A & 1 X 40A)

K6551sMET 1
4 WAY ENCLOSURE
63A 30mA RCD
1 X MCB (1 X 50A)

K6552sMET 1
8 WAY ENCLOSURE
63A 30mA RCD
6 X MCB'S
(3 X 6A, 1 X 16A & 2 X 20A)

K7678sMET 1
21 WAY ENCLOSURE
1 X 63A & 1 X 80A 30mA RCD'S
12 X MCB'S
(3 X 6A, 2 X 16A, 2 X 20A,
4 X 32A & 1 X 40A)
ACCEPTS A FURTHER 3 ONE MODULE PRODUCTS

All units are white coloured.
All units are pre-fitted with a switch disconnector and RCD together with all the necessary split-load cabling. The flexibility of design allows the RCD to be positioned to suit the required configuration of RCD protected and non-protected circuits, subject to the rating of either the switch or RCD not being exceeded.

MK recommends the use of RCBO's for non RCD protected circuits to comply with the 17th Edition Amendment 3 Wiring Regulations.

DIMENSIONS:	Width		Height		Depth
4 WAY	144	x	244	x	116mm
8 WAY	238	x	244	x	116mm
12 WAY	310	x	244	x	116mm
16 WAY	382	x	244	x	116mm
21 WAY	472	x	244	x	116mm

MAIN INCOMER RATING:
4 way enclosures: 63A
8, 12, 16 & 21 way enclosures: 100A
Degree of protection to BS EN 60529 to IP2XC.
Precautions must be taken to maintain the IP rating, e.g. Use of cable glands and knockouts.
BS EN 61439-3

FACTORY BUILT SERVICE: MK can save you time and money by pre-assembling consumer units with your required Sentry components

Sentry

Consumer Units

INSULATED
SURFACE

K5604sMAG

K5608sMAG

K5612sMAG

K5616sMAG

K5621sMAG

Switch Disconnectors Double Pole

TWO MODULE

5500s

5560s

K5604SMAG 1
4 WAY ENCLOSURE
ACCEPTS 4 ONE MODULE PRODUCTS
(1 INTEGRAL NEUTRAL BAR)

K5608SMAG 1
8 WAY ENCLOSURE
ACCEPTS 8 ONE MODULE PRODUCTS
(1 INTEGRAL NEUTRAL BAR)

All units are magnolia coloured.
All units feature a robust base together with an all over front cover and moulded lid in an impact resistant, flame retardant thermoplastic. Cable entry points are located on top, bottom, side and rear surfaces.

DIMENSIONS:	Width		Height		Depth
K5604sMAG	140	x	230	x	110mm
K5608sMAG	234	x	230	x	110mm
K5612sMAG	306	x	230	x	110mm
K5616sMAG	378	x	230	x	110mm
K5621sMAG	468	x	230	x	110mm

MAIN INCOMER MAXIMUM RATING
K5604sMAG and K5504sMAG: 63A
All other consumer units: 100A

K5612SMAG 1
12 WAY ENCLOSURE
ACCEPTS 12 ONE MODULE PRODUCTS
(2 INTEGRAL NEUTRAL BARS
FITTED WITH LINK)

K5616SMAG 1
16 WAY ENCLOSURE
ACCEPTS 16 ONE MODULE PRODUCTS
(3 INTEGRAL NEUTRAL BARS
FITTED WITH LINK)

K5621SMAG 1
21 WAY ENCLOSURE
ACCEPTS 21 ONE MODULE PRODUCTS
(4 INTEGRAL NEUTRAL BARS
FITTED WITH LINKS)

K5687SMAG17ED 1

Degree of protection to BS EN 60529 to IP2XC.
Precautions must be taken to maintain the IP rating, e.g. use of cable glands and knockouts.
BS EN 60439-3:1999

5500s 5
100A 230V

5560s 5
63A 230V

Suitable for installation in Sentry Consumer Units and two or four module enclosures. Accepts direct to busbar or cable-in / cable-out connection.
CATEGORY OF DUTY:
AC22A for switching of resistive and inductive loads.
Positive contact status indication in accordance with 17th Edition IEE Wiring Regulations
(537.2.2.2 and 537.3.2.2)
DIMENSIONS:
81 x 36 x 76mm
CABLE CAPACITY:
50mm²
BS EN 60947-3:1999

FACTORY BUILT SERVICE: MK can save you time and money by pre-assembling consumer units with your required Sentry components

MCBs
Single Pole

TYPE B
ONE MODULE

5903s 5906s

5910s 5916s

5920s 5940s

5945s 5950s

5903s 10
3A 230V
5906s 10
6A 230V
5910s 10
10A 230V
5916s 10
16A 230V

Suitable for installation in Sentry Consumer Units and two or four module enclosures.
Positive contact status indication in accordance with 17th Edition IEE Wiring Regulations (537.2.2.2 and 537.3.2.2)
DIMENSIONS:
83 x 18 x 74mm
CABLE CAPACITY:
35mm²
Short-circuit breaking capacity: 6KA
BS EN 60898:2003

5920s 10
20A 230V
5925s 10
25A 230V
5932s 10
32A 230V
5940s 10
40A 230V
5945s 10
45A 230V
5950s 10
50A 230V

Suitable for installation in Sentry Consumer Units and two or four module enclosures.
Positive contact status indication in accordance with 17th Edition IEE Wiring Regulations (537.2.2.2 and 537.3.2.2)
DIMENSIONS:
83 x 18 x 74mm
CABLE CAPACITY:
35mm²
SHORT-CIRCUIT BREAKING CAPACITY:
6KA
BS EN 60898:2003

MCB
Single Pole

TYPE C
ONE MODULE

8703s 8706s

8710s 8716s

8720s 8732s

8740s 8750s

8703s 10
3A 230V
8706s 10
6A 230V
8710s 10
10A 230V
8716s 10
16A 230V

Suitable for installation in Sentry Consumer Units and two or four module enclosures.
Positive contact status indication in accordance with 17th Edition IEE Wiring Regulations (537.2.2.2 and 537.3.2.2)
DIMENSIONS:
83 x 18 x 74mm
CABLE CAPACITY:
35mm²
SHORT-CIRCUIT BREAKING CAPACITY:
6KA
BS EN 60898:2003

8720s 10
20A 230V
8725s 10
25A 230V
8732s 10
32A 230V
8740s 10
40A 230V
8750s 10
50A 230V
8763s 10
63A 230V

Suitable for installation in Sentry Consumer Units and two or four module enclosures.
Positive contact status indication in accordance with 17th Edition IEE Wiring Regulations (537.2.2.2 and 537.3.2.2)
DIMENSIONS:
83 x 18 x 74mm
CABLE CAPACITY:
35mm²
SHORT-CIRCUIT BREAKING CAPACITY:
6KA
BS EN 60898:2003

Sentry

RCBOs With Solid Neutral Single Pole

TYPE B
ONE MODULE

7932s 7933s

7936s 7937s

TYPE C
ONE MODULE

7934s 7935s

7938s 7939s

8932s 8933s 8934s

8935s 8936s

Residential 6kA RCD Double Pole Type AC

16 AMP
TWO MODULE

7816s

7932s 1
6A 230V
30mA
TRIPPING CURRENT

7933s 1
10A 230V
30mA
TRIPPING CURRENT

7934s 1
16A 230V
30mA
TRIPPING CURRENT

Suitable for installation in Sentry Consumer Units.
Positive contact status indication in accordance with 17th Edition IEE Wiring Regulations (537.2.2.2 and 537.3.2.2)

DIMENSIONS:
119 x 18 x 73mm
CABLE CAPACITY:
Live 25mm²,
Neutral 25mm²
SHORT CIRCUIT BREAKING CAPACITY:
6KA
BS EN 61009-1
BS IEC 61009-2-2

7935s 1
20A 230V
30mA TRIPPING CURRENT

7936s 1
32A 230V
30mA TRIPPING CURRENT

7937s 1
40A 230V
30mA TRIPPING CURRENT

7938s 1
45A 230V
30mA TRIPPING CURRENT

7939s 1
50A 230V
30mA TRIPPING CURRENT

8932s 1
6A 230V
30mA
TRIPPING CURRENT

8933s 1
10A 230V
30mA
TRIPPING CURRENT

8934s 1
16A 230V
30mA
TRIPPING CURRENT

8935s 1
20A 230V
30mA
TRIPPING CURRENT

8936s 1
32A 230V
30mA
TRIPPING CURRENT

7816s 1
16A 230V
30mA TRIPPING CURRENT

Sentry

32 AMP
TWO MODULE

7832s

7832s 1
32A 230V
30mA TRIPPING CURRENT

40 AMP
TWO MODULE

7840s

7840s 1
40A 230V
30mA TRIPPING CURRENT

63 AMP
TWO MODULE

7860s

7660s

7860s 1
63A 230V
30mA TRIPPING CURRENT

7560s 1
63A 230V
100mA
TRIPPING CURRENT

7660s 1
63A 230V
300mA TRIPPING CURRENT

80 AMP
TWO MODULE

7880s

7680s

7880s 1
80A 230V
30mA TRIPPING CURRENT

7580s 1
80A 230V
100mA TRIPPING CURRENT

7680s 1
80A 230V
300mA TRIPPING CURRENT

Sentry

Industrial 10kA RCDs
Double Pole
Type AC

16 AMP TWO MODULE	32 AMP TWO MODULE	40 AMP TWO MODULE	63 AMP TWO MODULE	80 AMP TWO MODULE	100 AMP TWO MODULE
6016s	6032s	5740s	5760s	6080s	6600s
6316s	6730s		5860s	5880s	7800s

6016s 1
16A 110V
10mA TRIPPING
CURRENT

6416s 1
16A 110V
30mA TRIPPING
CURRENT

6316s 1
16A 230V
10mA TRIPPING
CURRENT

5716s 1
16A 230V
30mA TRIPPING
CURRENT

6032s 1
32A 110V
30mA TRIPPING
CURRENT

6730s 1
32A 230V
30mA TRIPPING
CURRENT

5740s 1
40A 230V
30mA TRIPPING
CURRENT

5760s 1
63A 230V
30mA TRIPPING
CURRENT

6160s 1
63A 230V
100mA TRIPPING
CURRENT

5860s 1
63A 230V
300mA TRIPPING
CURRENT

6080s 1
80A 110V
30mA TRIPPING
CURRENT

5780s 1
80A 230V
30mA TRIPPING
CURRENT

6180s 1
80A 230V
100mA TRIPPING
CURRENT

5880s 1
80A 230V
300mA TRIPPING
CURRENT

7700s 1
100A 230V
30mA TRIPPING
CURRENT

6600s 1
100A 230V
100mA TRIPPING
CURRENT

7800s 1
100A 230V
300mA TRIPPING
CURRENT

Suitable for installation in Sentry Consumer Units and two or four module enclosures.
Positive contact status indication in accordance with 17th Edition IET Wiring Regulations (537.2.2.2 and 537.3.2.2)

DIMENSIONS:
85 x 36 x 75mm

CABLE CAPACITY:
50mm²

BS EN 61008:1995

Industrial 10kA RCDs Pulsating d.c. Fault Current Sensitive Double Pole Type A

TWO MODULE

6216s

5640s

6630s

Industrial 10kA RCDs Time Delayed Double Pole

TWO MODULE

6980s

6400s

Industrial 10kA RCDs Four Pole Type AC

25 AMP
FOUR MODULE

6425s

40 AMP
FOUR MODULE

6440s

6240s

6216s 1
16A 230V
10mA TRIPPING CURRENT

6630s 1
32A 230V
30mA TRIPPING CURRENT

5640s 1
40A 230V
30mA TRIPPING CURRENT

5660s 1
63A 230V
30mA TRIPPING CURRENT

Suitable for installation in Sentry Consumer Units and two or four module enclosures.
Positive contact status indication in accordance with 17th Edition IET Wiring Regulations (537.2.2.2 and 537.3.2.2)
DIMENSIONS:
85 x 36 x 75mm
CABLE CAPACITY:
50mm²
BS EN 61008:1995

6980s 1
80A 230V
100mA TRIPPING CURRENT
TIME DELAYED

6400s 1
100A 230V
100mA TRIPPING CURRENT
TIME DELAYED

Suitable for installation in Sentry Consumer Units and Four Module enclosures. When used as a mains incomer these units will provide discrimination with downstream instantaneously operating 10mA or 30 mA RCD's. For example, they can be used as main incomers on split load consumer units where it is not desirable, because of the possibility of unwanted tripping, to place all of the circuits on an instantaneous 30mA RCD, but where earth leakage protection is still required for these circuits or where compliance is required to the indirect contact protection requirements of the IET Wiring Regulations.

DIMS: 81 x 36 x 76mm

CABLE CAPACITY: 50mm²

BS EN 61008:1995

NOT TO BE USED FOR PERSONAL PROTECTION AGAINST ELECTRIC SHOCK

6425s 1
25A 230/400V
30mA TRIPPING CURRENT

Suitable for installation in Sentry four module enclosures and Commando Combi.
Positive contact status indication in accordance with 17th Edition IET Wiring Regulations (537.2.2.2 and 537.3.2.2)
DIMENSIONS:
85 x 72 x 75mm
CABLE CAPACITY:
50mm²
BS EN 61008:1995

6440s 1
40A 230/400V
30mA TRIPPING CURRENT

6240s 1
40A 230/400V
100mA TRIPPING CURRENT

FACTORY BUILT SERVICE
MK can save you time and money by pre-assembling consumer units with your required Sentry components

Sentry

Industrial 10kA RCDs Four Pole Type AC

63 AMP

FOUR MODULE

6463s

6363s

Industrial 10kA RCD Pulsating d.c. Fault Current Sensitive, Four Pole Type A

FOUR MODULE

6640s

Contactors

ONE MODULE

6220s

6720s

TWO MODULE

7240s

7263s

THREE MODULE

7440s

7463s

6463s 1
63A 230/400V
30mA TRIPPING CURRENT

6363s 1
63A 230/400V
100mA TRIPPING CURRENT

6263s 1
63A 230/400V
300mA TRIPPING CURRENT

6640s 1
40A 230/400V
30mA TRIPPING CURRENT

Suitable for installation in Sentry two or four module enclosures.

Positive contact status indication in accordance with 17th Edition IET Wiring Regulations (537.2.2.2 and 537.3.2.2)

DIMENSIONS:
85 x 72 x 75mm

CABLE CAPACITY:
50mm²

BS EN 61008:1995

6220s 1
20A
DOUBLE POLE

6720s 1
20A
DOUBLE POLE
WITH MANUAL OVERRIDE

Suitable for installation in Sentry Consumer Units and two or four module enclosures. Automatically switches higher loads than possible with a time switch eg; off peak tariffs.

A manual override enables the temporary setting of the contactor in either the on or off position in addition to normal automatic operation.

When a contactor is mounted alongside an MCB of greater than 10 amp current rating or two contractors are mounted alongside an MCB or side by side, it is necessary to insert a blank module between them (list no.5544s)

6420s 1
20A
FOUR POLE

7240s 1
40A
DOUBLE POLE

7263s 1
63A
DOUBLE POLE

7440s 1
40A
FOUR POLE

7463s 1
63A
FOUR POLE

CONTACTOR RATINGS:			
List no	6220s 6420s 6720s	7240s 7440s	7263s 7463s
RATED CURRENT Ith	20A	40A	63A
HEATING Single phase 230V Three phase 400V	5.4kW 16kW	8.6kW 26kW	13.6kW 41kW
MOTORS Single phase 230V Three phase 400V	1.1kW 4kW	2.2kW 7.5kW	4kW 11kW
LIGHTING Incandescent and Halogen lamps: Fluorescent Lamps: (Electronic Ballast)	2,800W 2,000W	7,000W 4,200W	10,000W 6,300W
VOLTAGE RATING (coil)	230V 50Hz	230V 50Hz	230V 50Hz
CABLE CAPACITY	6mm² rigid	25mm² rigid	25mm² rigid
BS EN 61095			
DIMENSIONS:	6220S: 84 x 18 x 66mm	6420S: 84 x 36 x 66mm	6720S: 84 x 18 x 66mm
	7240S: 84 x 36 x 66mm	7263S: 84 x 36 x 66mm	7440S: 84 x 54 x 66mm
	7463S: 84 x 54 x 66mm	(including half module blank)	

Sentry

Bell Transformer

TWO MODULE

5711s

Time Switches

SYNCHRONOUS
THREE MODULE

5707s

5724s

QUARTZ
STABILISED
THREE MODULE

5824s

SYNCHRONOUS
ONE MODULE

5833s

DIGITAL
ONE CHANNEL
TWO MODULE

5731s

DIGITAL
ONE CHANNEL
ONE MODULE

5733s

DIGITAL
TWO CHANNEL
TWO MODULE

5732s

5711s 1
RATING 1A AT 8V PRIMARY
220 – 240V A.C.50HZ

Suitable for installation in Sentry Consumer Units and two or four module enclosures.

NOTE:
When installed in a consumer unit, ensure that output cables inside the enclosures are suitable for a 230V environment, either by sleeving the bell wire to BS 2848 or using 230V cable.

Complete with terminal covers. Also suitable for surface mounting.

DIMENSIONS:
88 x 36 x 67mm
CABLE CAPACITY:
1 x 2.5mm2
EN 61558-2-8

5707s 1
7 DAY DIAL
MIN SETTING 3 HOURS

5724s 1
24 HOUR DIAL
MIN SETTING 30 MINUTES

Suitable for DIN rail mounting in Sentry Consumer Units or four module enclosures.
VOLTAGE RATING:
220-240Va.c. 50Hz
CURRENT RATING:
Resistive load 16A
Inductive load 4A
Tungsten lamps 6A (1350W)
Fluorescent lamps 1350W
DIMENSIONS:
85 x 54 x 68mm
CABLE CAPACITY:
2 x 2.5mm² or 4 x 1.5mm²

5824s 1
24 HOUR DIAL
MIN SETTING 30 MINUTES

Suitable for DIN rail mounting in Sentry Consumer Units and two or four module enclosures.
Power reserve 150 hours
VOLTAGE RATING:
220-240Va.c. 50-60Hz
CURRENT RATING:
Resistive load 16A
Inductive load 4A
Tungsten lamps 6A (1350W)
Fluorescent lamps 1350W
DIMENSIONS:
85 x 54 x 68mm
CABLE CAPACITY:
2 x 2.5mm² or 4 x 1.5mm²
EN 60730-2-7:1993

5833s 1
24 HOUR DIAL
MIN SETTING 30 MINUTES

Suitable for DIN rail mounting in Sentry Consumer Units and two or four module enclosures
VOLTAGE RATING:
240V 50Hz
CURRENT RATING:
Resistive load 16A
Inductive load 4A
Tungsten lamps 6A (1350W)
Fluorescent lamps 1350W
DIMENSIONS:
90 x 18 x 68mm
CABLE CAPACITY:
2 x 2.5mm² or 4 x 1.5mm²
EN 60730-2-7:1993

5731s 1
24 HOUR/7 DAY DISPLAY
MIN SETTING 1 MINUTE

Pre-programmed with UK time and automatic summer/winter adjustment.
Provides 50 programming selections. Freely selectable day grouping facility. Manual override, winter/summer time adjustment.
Power reserve of 3 years.
Suitable for DIN-rail mounting in Sentry Consumer Units and two or four module enclosures.
VOLTAGE RATING:
240V 50/60Hz
CURRENT RATING:
Resistive load 16A
Inductive load 2.5A
Tungsten lamps 5A (1000W)
Fluorescent lamps 1000W
DIMENSIONS:
85 x 36 x 68mm
CABLE CAPACITY:
2 x 2.5mm² or 4 x 1.5mm²
EN 60730-2-7:1993

5733s 1
24 HOUR DIAL
MIN SETTING 1 MINUTE

Provides 50 programming selections. Freely selectable day grouping facility. Manual override, winter/summer time adjustment, holiday programme and random generator are standard facilities.
Power reserve of 150 hours.
Suitable for DIN rail mounting in Sentry Consumer Units and two or four module enclosures
VOLTAGE RATING:
240V 50/60Hz
CURRENT RATING:
Resistive load 16A
Inductive load 2.5A
Tungsten lamps 5A (1000W)
Fluorescent lamps 1000W
DIMENSIONS:
90 x 18 x 74mm
CABLE CAPACITY:
2 x 2.5mm² or 4 x 1.5mm²
EN 60730-2-7:1993

5732s 1
24 HOUR/7 DAY DISPLAY
MIN SETTING 1 MINUTE

Pre-programmed with UK time and automatic summer/winter adjustment.
Provides 50 programming selections. Freely selectable day grouping facility. Manual override, winter/summer time adjustment.
Power reserve of 3 years.
Suitable for DIN-rail mounting in Sentry Consumer Units and two or four module enclosures.
VOLTAGE RATING:
240V 50/60Hz
CURRENT RATING:
Resistive load 16A
Inductive load 2.5A
Tungsten lamps 5A (1000W)
Fluorescent lamps 1000W
DIMENSIONS:
85 x 36 x 68mm
CABLE CAPACITY:
2 x 2.5mm² or 4 x 1.5mm²
EN 60730-2-7:1993

Sentry

Time Delay Switches

Consumer Unit Cable Kits

Accessories

ONE MODULE

5650s

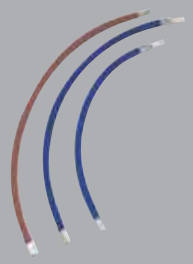

K5563s

K5565s

5562s

K8041s

K5593s

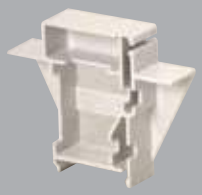

5544s

K5545sMAG

K5511s

KAX26s

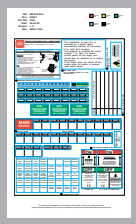

K5597s

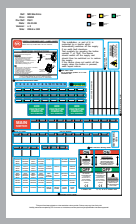

K5599s

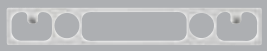

K6061SMET

K6062SMET

5650s 1
DELAY RANGE
1 - 7 MINUTES (APPROX)

Suitable for installation in Sentry Consumer Units and two or four module enclosures. Offers time delay control for complete circuits of either tungsten or fluorescent lighting with any number of standard push switches. It can also be used to control fans in bathrooms without a window. Delay setting can be over-ridden by setting to 'Perm-on' mode, or by fitting a remote overriding switch. Switch has a switching capacity of 16A Resistive loads (upf)

Fluorescent lamps uncompensated
Series compensated 1300W
Parallel compensated 480W
CFLS 100W Max. Maximum of 9 units can be connected
Incandescent lamps 2000W
Neon glow lamp load (locating lamp for Push Switch) 50mA max

VOLTAGE RATING:
230V 50Hz
DIMENSIONS:
84 x 18 x 70mm
CABLE CAPACITY:
1 x 4mm^{2}or 2 x 1.5mm^2

K5563s 5
SPLIT-LOAD KIT
CONSISTS OF 3 CABLES (2 NEUTRAL AND 1 LIVE) FOR USE WHEN ASSEMBLING A SPLIT LOAD ARRANGEMENT

K5565s 5
MULTI-INCOMER KIT
CONSISTS OF A BLUE FLEXIBLE CABLE WITH PRE-FITTED TERMINAL FOR THE NEUTRAL RETURN FROM SWITCH OR RCD TO SECOND OR THIRD NEUTRAL BAR

K5568s 5
17TH EDITION CABLE KIT FOR SWITCH AND TWIN RCD ARRANGEMENT

K5567s 5
A&D CABLE KIT FOR SWITCH PLUS TRIPLE RCD ARRANGEMENT

K5563S
For use when assembling split-load arrangement.
K5565S
For use when assembling a consumer unit in a multi-incomer arrangement with separate supply to each incomer.
These kits must be used to ensure compliance with BS EN 60439-3

5562s 1
EXTENSION TERMINAL FOR USE WHEN ASSEMBLING A CONSUMER UNIT AS A DISTRIBUTION BOARD. ENABLES DIRECT CONNECTION OF CABLES TO THE NEUTRAL BAR. CONSISTS OF A 25MM2 CAPACITY TERMINAL WITH CLAMP SCREW

K8041s 10
LOCKING DEVICE FOR USE WHEN LOCKING A SENTRY MCB, RCBO, RCD OR SWITCH DISCONNECTOR IN EITHER THE ON OR OFF POSITION

K5593s 1
BARREL LOCK AND KEY KIT SUITABLE FOR SECURING 'K' SERIES SENTRY CONSUMER UNIT LIDS.
ONLY SUITABLE FOR HYBRID AND INSULATED CONSUMER UNITS

5544s 5
MCB BLANK – GREY DESIGNED TO FILL UNUSED MODULES IN SENTRY CONSUMER UNITS AND SMALL ENCLOSURES. DIN-RAIL MOUNTED

K5545sMAG 10
COVER MOUNTED BLANK FOR FILLING SPACES IN THE 'K' SERIES SENTRY CONSUMER UNIT COVER, WHERE THERE ARE UNUSED MODULES

K5511s 1
BUSBAR 11 MODULE

K5590s 1
BUSBAR 20 MODULE

KAX26s 10
BUSBAR COVER
SUITABLE FOR INSULATING THE BUSBARS K5511S AND K5590S 20 MODULE.
ONLY SUITABLE FOR HYBRID AND INSULATED CONSUMER UNITS

K5597s 5
CONSUMER UNIT LABELS ADDITIONAL PRINTED AND BLANK LABELS, FOR IDENTIFYING DEVICES AND CIRCUITS ON DUAL & TRIPLE RCD BOARDS

K5599s 5
CONSUMER UNIT LABELS ADDITIONAL PRINTED AND BLANK LABELS, FOR IDENTIFYING DEVICES AND CIRCUITS ON SINGLE RCD BOARDS

K5804sD1MAG
K5808sD1MAG
K5812sD1MAG
K5816sD1MAG
K5821sD1MAG
REPLACEMENT PLASTIC FRONT COVERS

K6060SMET 1
16 WAY METAL CONSUMER UNIT SURFACE MOUNTING KIT

K6061SMET 1
12 WAY METAL CONSUMER UNIT STACKING KIT

K6062SMET 1
16 WAY METAL CONSUMER UNIT STACKING KIT

PRODUCT APPLICATION

ASPECT DOUBLE SOCKET – BESPOKE FINISH

Available on a worldwide basis, the MK Design Service is supported by a dedicated team to ensure the seamless delivery of your chosen products.

To find out more visit www.mkelectric.co.uk

SENTRYSOCKET®

RANGE INTRODUCTION

Sentrysocket provides a high level of protection against electrocution and is available in 4 MK wiring device ranges to suit most applications.

FEATURES & BENEFITS

ACTIVE CONTROL CIRCUIT

This version of Sentrysocket incorporates a 'RE-SET' mechanism and is mains failure sensitive ie. it will function under all normal conditions expected of an RCD but it will also trip in the event of a power cut or a dramatic reduction in mains voltage. This makes it ideal for use where hazardous situations could occur due to equipment such as rotating machinery and heat developing apparatus becoming suddenly energised after a power cut.

PASSIVE CONTROL CIRCUIT

This version of Sentrysocket incorporates a 'STAY-SET' mechanism and is mains failure proof ie. it will function under all normal conditions expected of an RCD but will not trip in the event of a power cut. This makes it suitable for freezers or use in inaccessible or unmanned locations.

ALL SENTRYSOCKETS ARE PULSATING D.C. AND A.C. FAULT CURRENT SENSITIVE PRODUCTS

Sentrysocket®

RCD Protected Switchsocket Outlets

13 AMP LOGIC PLUS FLUSH

K6300WHI

K6303WHI

K6231WHI

K6233WHI

ALBANY PLUS FLUSH

K6301BRC

K6304BSS

METALCLAD PLUS SURFACE

K6102ALM

K6302ALM

K6305ALM

K6231ALM

K6233ALM

MASTERSEAL PLUS IP66 SURFACE

K56301GRY

K56231BLK

K56231WHI

K6300WHI 1
1 GANG DP, 30mA RATED, TRIPPING CURRENT, ACTIVE CONTROL CIRCUIT

K6303WHI 1
1 GANG DP, 30mA RATED, TRIPPING CURRENT, PASSIVE CONTROL CIRCUIT

K6231WHI 1
2 GANG SP, 30mA RATED, TRIPPING CURRENT, ACTIVE CONTROL CIRCUIT

K6233WHI 1
2 GANG SP, 30mA RATED, TRIPPING CURRENT, PASSIVE CONTROL CIRCUIT

MOUNTING BOXES
Flush: 886ZIC – 35mm deep
Boxes must have a minimum depth of 30mm
SURFACE
K2140WHI, 30mm deep, products have up to 15mm thick frontplates
DIMENSIONS
86 x 146mm
FIXING CENTRES
120.6mm
BS 7288:1990

K6301BSS 1
K6301BRC 1
K6301PCR
K6301SAG 1
1 GANG DP
30mA RATED TRIPPING CURRENT
ACTIVE CONTROL CIRCUIT

K6304BRC 1
K6304BSS 1
1 GANG DP
30mA RATED TRIPPING CURRENT
PASSIVE CONTROL CIRCUIT

MOUNTING BOXES
Flush: 886ZIC – 35mm deep
Boxes must have a minimum depth of 30mm
SURFACE
with knockouts: K897ALM
without knockouts: K830ALM
DIMENSIONS
86 x 146mm
FIXING CENTRES
120.6mm
BS 7288:1990

K6102ALM 1
1 GANG DP
10mA RATED TRIPPING CURRENT
ACTIVE CONTROL CIRCUIT

K6302ALM 1
1 GANG DP
30mA RATED TRIPPING CURRENT
ACTIVE CONTROL CIRCUIT

K6305ALM 1
1 GANG DP
30mA RATED TRIPPING CURRENT
PASSIVE CONTROL CIRCUIT

DIMENSIONS
86 x 147 x 54mm
KNOCKOUTS
8 x 20mm
Three in top side, two in bottom side, one in each end and one in base
SPARE BOX
K897ALM
BS 7288:1990

K6231ALM 1
2 GANG SP
30mA RATED TRIPPING CURRENT
ACTIVE CONTROL CIRCUIT

K6233ALM 1
2 GANG SP
30mA RATED TRIPPING CURRENT
PASSIVE CONTROL CIRCUIT

DIMENSIONS
86 x 147 x 54mm
KNOCKOUTS
8 x 20mm
Three in top side, two in bottom side, one in each end and one in base
SPARE BOX
K897ALM
BS 7288:1990

K56301GRY 1
K56301WHI 1
K56301BLK 1
1 GANG DP
30mA RATED TRIPPING CURRENT ACTIVE CONTROL CIRCUIT

K56231GRY 1
K56231WHI 1
K56231BLK 1
2 GANG SP
30mA RATED TRIPPING CURRENT ACTIVE CONTROL CIRCUIT

K56233GRY 1
K56233WHI 1
K56233BLK 1
2 GANG SP
30mA RATED TRIPPING CURRENT
PASSIVE CONTROL CIRCUIT

Fixing holes are for No.8 woodscrews (not supplied).
Supplied with an earth terminal in the back box. The Sentrysocket has 5 entries. Suitable for supply voltage of 240V a.c.
Standard Shutters
DIMENSIONS
157 x 175 x 89mm
BS 7288:1990
IP66 BS EN 60529:1992

All SENTRYSOCKETS ARE PULSATING D.C. AND A.C. FAULT CURRENT SENSITIVE PRODUCTS:
It is important to ensure that the correct control circuit , active or passive, is selected for each application.
Suitable for supply voltage of 240V a.c.

Prestige 3D

Prestige 3D is a family of three compartment trunking from MK Electric, which satisfies the growing demands of cable management installations, as well as providing greater trunking depth to cater for Cat 5e, 6 and 7 structured cabling. Prestige 3D is rich in unique features offering greater cabling capacity and improved aesthetics.

PRESTIGE 3D
DADO AND SKIRTING

PRESTIGE 3D
ANTIBAC BLUE

PRESTIGE 3D
COMPACT

PRESTIGE **3D** DADO AND SKIRTING

Prestige 3D Dado and Skirting offers a comprehensive range of Cat 5e, 6 and 7 compliant full 3 compartment trunking with maximum cable capacity.

- Fully Cat 5e, 6 and 7 compliant
- Patented Data Sweep maximises cable capacity without the need for bulbous corners

PRESTIGE 3D ANTIBAC BLUE

Prestige 3D Antibac Blue offers an antibacterial cable management solution for power and data distribution in environments where hygiene is a priority. Prestige 3D Antibac Blue is designed to kill bacteria which can grow on surfaces such as trunking systems. It uses a silver based additive inherent within the PVCu which acts as an effective weapon in fighting harmful bacteria such as MRSA. Independent laboratory tests show kill rate of >99.9% over a 24 hour period for MRSA, and Klebsiella pneumoniae.

- Improved aesthetics with single piece covers
- All PVC extrusions manufactured from100% recycled materials*

PRESTIGE 3D COMPACT

Prestige 3D Compact is a Dado system which has a smaller footprint and offers a solution where space is restricted such as above radiators and below window sills. Cables are run in the top and bottom compartments allowing the full depth of the centre compartment for termination to devices. The Compact range is a lower price alternative especially if there are low quantities of cable to manage.

- 10 Year guarantee

*Based on 2014 consumption

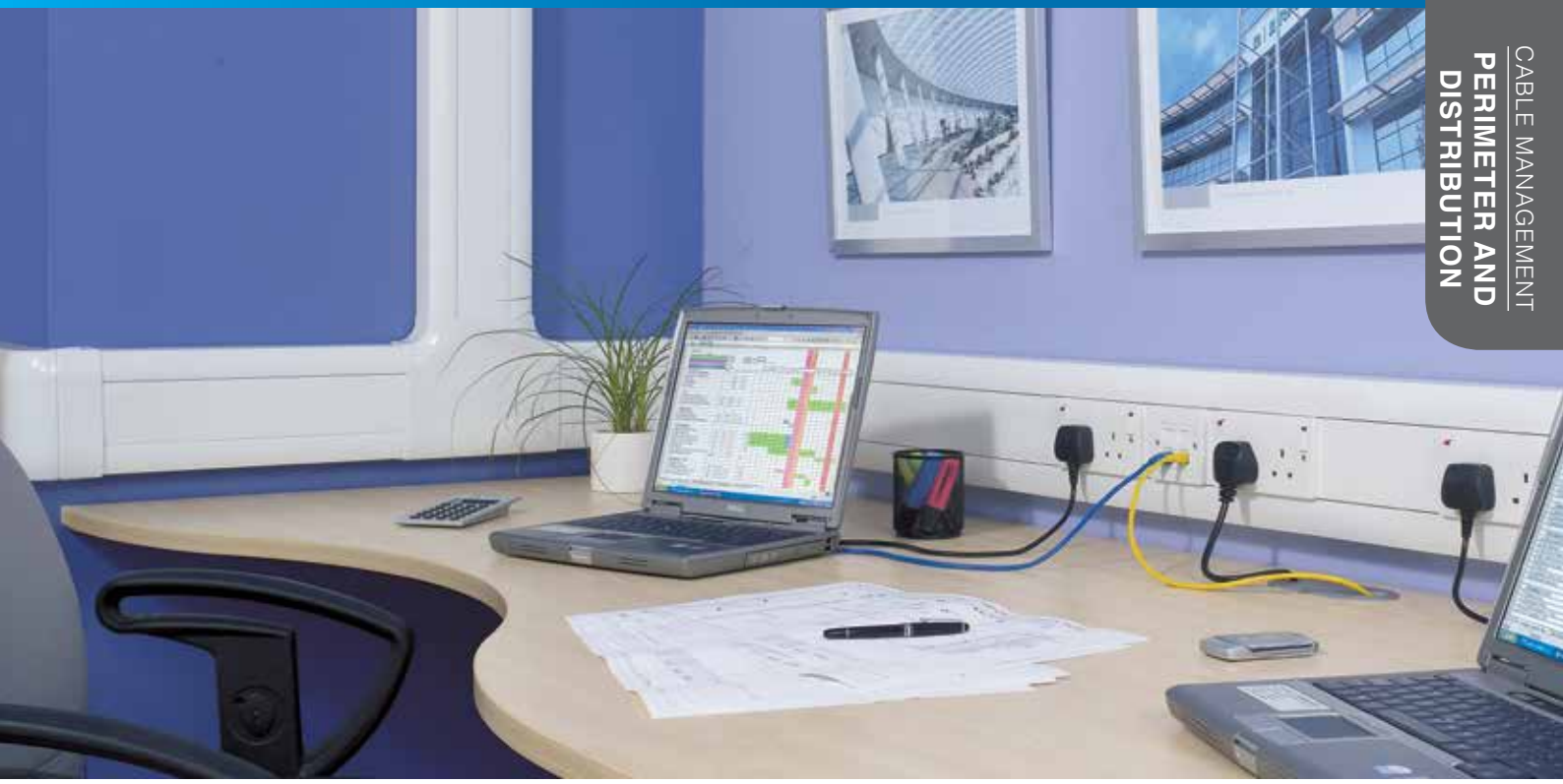

PRESTIGE 3D DADO AND SKIRTING

RANGE INTRODUCTION

Prestige 3D Dado and Skirting offers a comprehensive range of Cat 5e, 6 and 7 compliant compartment trunking with maximum cable capacity.

Prestige 3D meets both the demands for easier and faster installation while maintaining high aesthetics.

HOW TO SPECIFY

A range of 3 compartment Dado and Skirting manufactured from recycled PVCu, designed with a curved covers to compliment MK Logic Plus accessories. Cat 5e, 6 and 7 compliant on all Tees, Angles, Internal and External corners utilising data sweeps that ensure no loss of capacity without the need for bulky protruding covers. Products to have pre-punched bases and divider knockouts at 100mm intervals to facilitate easy installation without the need for drilling and cutting.

FEATURES & BENEFITS

CAT 5E, 6 & 7 COMPLIANT
Flexible Internal and External Corners, moulded Flat Angles and Tees

TOOL FREE CABLE ENTRY
Unique 'open box' mounting frames combined with divider knockouts to provide unhindered tool-free cable entry

MAXIMISES CAPACITY
Innovative External Corner Data Sweep allows continuous cable capacity and maintains the minimum trunking depth

PRE-DRILLED TRUNKING BASES
Eliminates the need to measure and drill fixing holes on site thus reducing installation time

HINGED LID
Supports cables during installation

STYLISH AND ROBUST
Curved outer covers that complement MK Logic Plus accessories

MADE FROM 100% RECYCLED PVCu*

10 YEAR GUARANTEE

*Based on 2014 consumption

Prestige 3D Dado and Skirting

DIVIDER KNOCKOUTS
Wiring is also made easy with 50 x 21mm knockouts at 100mm intervals along compartment dividers, providing instant access to mounting boxes, with no drilling or cutting.

BACK BOXES
1, 2 and 3 gang 45mm deep back boxes and 1 and 2 gang 40mm frames ensure Cat 5e, 6 and 7 compliance and ease of connection to power and data devices. The open top/bottom allows unhindered tool free cable entry, through the trunking compartment divider knockout. The back box can slide to align with appropriate knockout (see technical pages for restrictions on use).

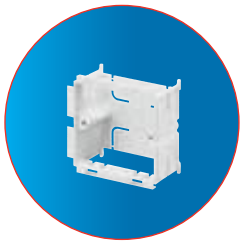

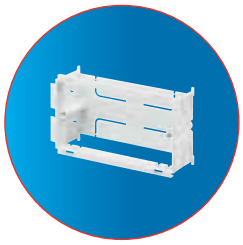

END CAPS
Neatly finishes runs of trunking. (Moulding provides internal location for extra security from optional screw fixing).

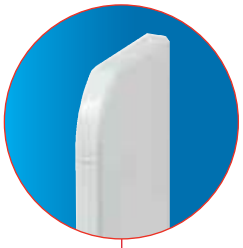

PRE-PUNCHED BASES
Wall fixing is simplified by the inclusion of pre-punched oval holes at 100mm intervals, ensures no drilling is required.

INTERNAL CORNER
Designed to accommodate irregularities in the squareness of the corner with a +/- 5 degrees flexibility range. The centre split gives maximum adjustment. Covers are radiused and compatible with Cat 5e, 6 and 7 data cabling requirements.

PART M
Compliance to Part M building regulations can be achieved using Part M flange, charcoal devices or charcoal straight cover.

SCREW FIXING KIT
Where higher security is required, e.g. schools, all fitting covers can be secured using the Screw Fixing Kit.

The Screw Fixing Kit is self-locating on the styling line of the system and has a cover to hide the screw head.

Prestige 3D Dado and Skirting

FLAT TEES AND ANGLES

The ingenuity of the patented tee design allows a variety of cable drop permutations. The tee's bridge can be fitted in two positions increasing the versatility of cable runs whilst maintaining the correct segregation and Cat 5e, 6 and 7 compliance. Screw fixing hole locations have a protective shroud to prevent the chafing of cables.

Both the Flat Angle and Tee compartment divider walls are curved (Cat 5e, 6 and 7 compliant) to allow data cables to lay in with no loss of capacity. The covers are one piece and clip securely into place, and the base is also a single moulded item, giving more strength than fabrication. Joint covers are not required where the tee/angle meets the trunking as the moulded covers now overlap the junction.

ELECTROMAGNETIC INTERFERENCE

Additional data cable/signal protection is provided by fitting screening divider VP30.

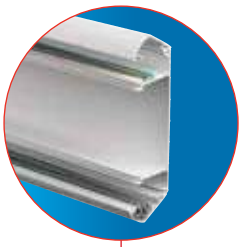

TRUNKING HINGE LIDS

A two stage location gives a hinge effect, enabling cables to be supported by the trunking cover during the installation. Cover design avoids dust traps and makes cleaning easier, and continues the aesthetics of the trunking.

STYLING LINES

All fittings are moulded with styling lines for aesthetic continuity.

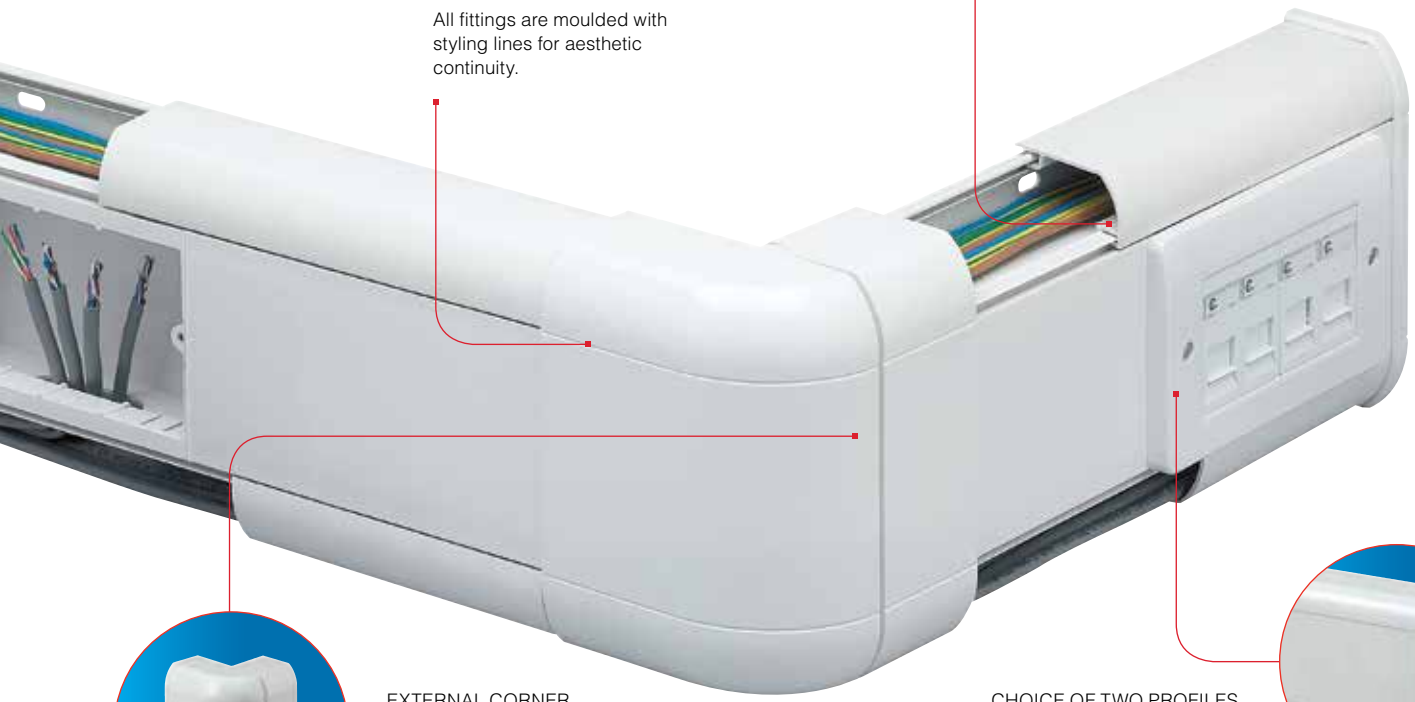

EXTERNAL CORNER

External Corners accommodate +/- 5 degree irregularities in the squareness of a corner. Corners come ready assembled to click into place, and offset side splits hide the effect of the split line for aesthetics.

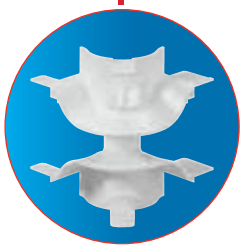

DATA SWEEP

The unique patented Data Sweep provides Cat 5e, 6 and 7 data cabling compliance, with no loss of capacity and without the need for bulky, protruding corner covers.

CHOICE OF TWO PROFILES

Available in Dado and Skirting profiles to suit most installations.

Available in white and charcoal.

Prestige 3D Dado and Skirting

Component Selector Chart

	Profile Lengths				Fittings
	Main Carrier	Straight Cover	Curved Cover	Square Cover	Flexible Internal Corner
	3 METRES 6m	3 METRES 30m	3 METRES 30m	3 METRES 30m	2
		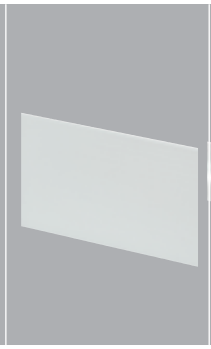			
DADO 170 X 57MM	VP180WHI VP180CHA	VP100WHI VP100CHA*	VP110WHI X2 VP110CHA X2		VP181WHI VP181CHA
SKIRTING 170 X 57MM	VP180WHI VP180CHA	VP100WHI VP100CHA*	VP110WHI VP110CHA	VP115WHI VP115CHA	VP191WHI VP191CHA

* Use Charcoal lid to help achieve compliance to Part M

Prestige 3D Dado and Skirting

Flexible External Corner	End Cap	Joint Cover	Flat Angle	Flat Tee	Adaptor
CONSISTS OF COVER AND DATA SWEEP 2	SUPPLIED AS LEFT AND RIGHT-HAND PAIR 2	5	CONSISTS OF COVER AND CARRIER 1	CONSISTS OF COVER AND CARRIER 1	SUITABLE FOR 20 AND 25MM CONDUIT AND YT2 AND YT4 MINI-TRUNKING 10
	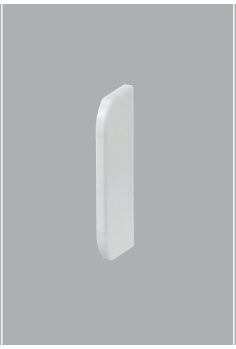				
VP182WHI VP182CHA	VP183WHI VP183CHA	VP184WHI VP184CHA	VP185WHI VP185CHA	VP187WHI VP187CHA	VP188WHI VP188CHA
VP192WHI VP192CHA	VP193WHI VP193CHA	VP194WHI VP194CHA	FLAT ANGLE UP VP195WHI VP195CHA FLAT ANGLE DOWN VP196WHI** VP196CHA**	VP197WHI VP197CHA	VP188WHI VP188CHA

** These items are fabricated

Prestige 3D Dado and Skirting

Accessories

Socket Spacer

VP129WHI 50
VP129CHA 50
SOCKET SACER
25MM WIDE

Visible width is 9mm after installation.

Part M Flange and Socket Spacer

VX40CHA 20
VX40BLU 20
PART M FLANGE FITTED BOTH SIDES OF A DEVICE

VX41CHA 10
VX41BLU 10
PART M SOCKET SPACER

Provides colour contrast with wiring device to comply with Part M.
Visible width is 25mm after installation.

Open Back Boxes

VP121WHI 25
1 GANG 45MM
OPEN BACK BOX

VP122WHI 10
2 GANG 45MM
OPEN BACK BOX

VP123WHI 5
3 GANG 45MM
OPEN BACK BOX

Open Mounting Frames*

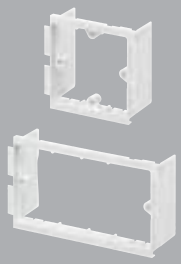

VP131WHI 25
VP131CHA 25
1 GANG 40MM OPEN
MOUNTING FRAME

VP132WHI 10
VP132CHA 10
2 GANG 40MM OPEN
MOUNTING FRAME

1 Gang frame is used in vertical applications.
Wings may be removed for greater wiring space.
*Open mounting frames are only suitable where services running in the centre compartment are the same as that of the accessory.

MCB/RCD Housing

VP35WHI 1
MCB/RCD HOUSING
WITH COVER
(ACCESSORY NOT SUPPLIED)

Mounts directly to central compartment of trunking to accept up to 2 x one module products from the Sentry range of MCBs and RCDs (excluding one module RCBOs).

Cable Retainer

VP105WHI 50
CABLE RETAINER

Screw Fixing Kit

VTS1000 20
SCREW FIXING KIT

Screening Divider

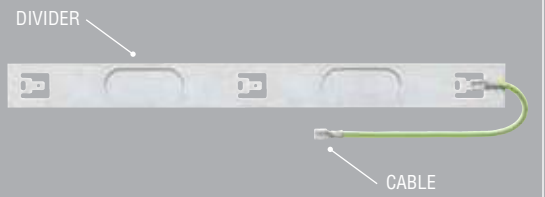

VP30** 15m
1.5M SCREENING
DIVIDER

VX31 10
300MM SCREEN
CONNECTING CABLE

** Cable not included

PRESTIGE 3D ANTIBAC BLUE INSTALLED WITH LOGIC PLUS PART M SWITCHSOCKET OUTLETS

PRESTIGE 3D ANTIBAC BLUE

RANGE INTRODUCTION

Prestige 3D Antibac Blue offers an antibacterial cable management solution for power and data distribution in environments where hygiene is a priority.

With ongoing concern over hospital acquired infections such as MRSA, the demand for antibacterial products continues to rise. Prestige 3D Antibac Blue is designed to kill bacteria which can grow on surfaces such as trunking systems. It uses a silver based additive inherent within the PVCu which acts as an effective weapon in fighting harmful bacteria such as MRSA, and Klebsiella pneumoniae. MK offer a complete antibacterial solution, by complementing Prestige 3D Antibac Blue with Logic Plus wiring devices, the entire installation will meet the requirements of an antibacterial specification. The trunking and wiring devices are both open to contact, therefore the control of the spread of bacteria and infections can only be effective with a complete solution. MK's Prestige 3D Antibac Blue range will meet the demands of the Healthcare Trusts, Infection Control Departments or Facilities Managers specifying antibacterial products.

HOW TO SPECIFY

A range of antibacterial 3 compartment Dado and Skirting, designed with a curved covers to compliment MK Logic Plus accessories. Products to have Blue fluorescent additive to clearly identify antibacterial properties. Cat 5e, 6 and 7 compliant on all Tees, Angles, Internal and External corners utilising data sweeps that ensure no loss of capacity without the need for bulky protruding covers. Products to have pre-punched bases and divider knockouts at 100mm intervals to facilitate easy installation without the need for drilling and cutting.

FEATURES & BENEFITS

UNIQUE ANTIBACTERIAL SOLUTION
Offers a complete antibacterial solution. >99.9% kill rate against MRSA and Klebsiella pneumoniae

UNIQUE PATENTED FLUORESCENCE
Demonstrable under UV light, providing customer confidence

CAT5E, 6 & 7 COMPLIENT
Flexible internal and external corners, moulded flat angles and tees

TOOL FREE CABLE ENTRY
Unique 'open box' mounting frames combined with divider knockouts to provide unhindered tool free cable entry

MAXIMISES CAPACITY
Innovative external corner data sweep allows continuous cable capacity and maintains the minimum trunking depth

PRE-DRILLED TRUNKING BASES
Eliminates the need to measure and drill fixing holes on site thus reducing installation time

TAMPER RESISTANT
Screw fixing Kit available for installations where higher security is required e.g. public buildings, hospitals, schools

PART M COMPLIANCE
Achievable utilising MK Logic Plus Graphite accessories or Part M Flange or Socket Spacer

10 YEAR GUARANTEE

Prestige 3D Antibac Blue

Reports show 300,000 healthcare associated infections were contracted in the UK in 2008, with an annual investment of £270million in infection control.

- Healthcare associated infections cause 5000 deaths a year, at a cost of £1billion.
- Patients recovering from such infections spend on average 10 extra days in hospital, which costs the NHS three times their original treatment.
- The use of antibacterial products supports the existing infection control initiatives such as hand hygiene and barrier nursing.

PRESTIGE 3D **ANTIBAC BLUE** INSTALLED WITH MEIGAN SOCKET OUTLETS

HOW DOES PRESTIGE 3D ANTIBAC BLUE WORK?

Prestige 3D Antibac Blue is an antibacterial 3 compartment power and data trunking system designed to kill bacteria which can grow on surfaces.

It uses a silver based additive inherent within the PVCu which acts as an effective weapon in fighting bacteria such as MRSA and other harmful bacteria. The silver additive is a bactericide and will therefore kill bacteria instead of just restricting their growth.

As the additive is inherent within the PVCu compound the antibacterial protection runs throughout the products themselves. There is no loss of protection where the trunking lengths are cut on-site or if the trunking surface becomes scuffed or scratched.

The antibacterial additive depends on intimate contact between surfaces of the trunking and the user, so any barriers such as dirt or grime will reduce or negate the antibacterial effect.

Prestige 3D Antibac Blue is not intended to replace standard cleaning regimes. It is an additional protection which can only operate efficiently if the surfaces are kept free of dirt and grime.

The antibacterial additive used in Prestige 3D Antibac Blue is registered with the Environmental Protection Agency (EPA) and compliant with the European Biocidal Products Directive (BPD).

The additive provides effective protection against both gram positive and gram negative bacteria, unlike some other anti-bacterial additives which are only effective against gram positive bacteria.

Prestige 3D Antibac Blue

MK Electric have commissioned independent tests to verify the antibacterial properties of Prestige 3D Antibac Blue.

The results, collected over a 24 hour period shows results of >99.9% kill rates on the organisms MRSA, and Klebsiella pneumoniae.

MK Electric have also commissioned independent tests to verify the antibacterial properties of Logic Plus. The results, collected over a 24 hour period shows results of 99.9% kill rates on the organism MRSA and 98.9% kill rates on the organism Klebsiella pneumoniae.

PRESTIGE 3D ANTIBAC BLUE			LOGIC PLUS	
	% ORGANISMS AT START OF TEST	% ORGANISMS AFTER 24 HOUR PERIOD	% ORGANISMS AT START OF TEST	% ORGANISMS AFTER 24 HOUR PERIOD
MRSA	100	<0.1	100	0.1
KLEBSIELLA PNEUMONIAE	100	<0.1	100	1.1

LOGIC PLUS SWITCHSOCKET OUTLET

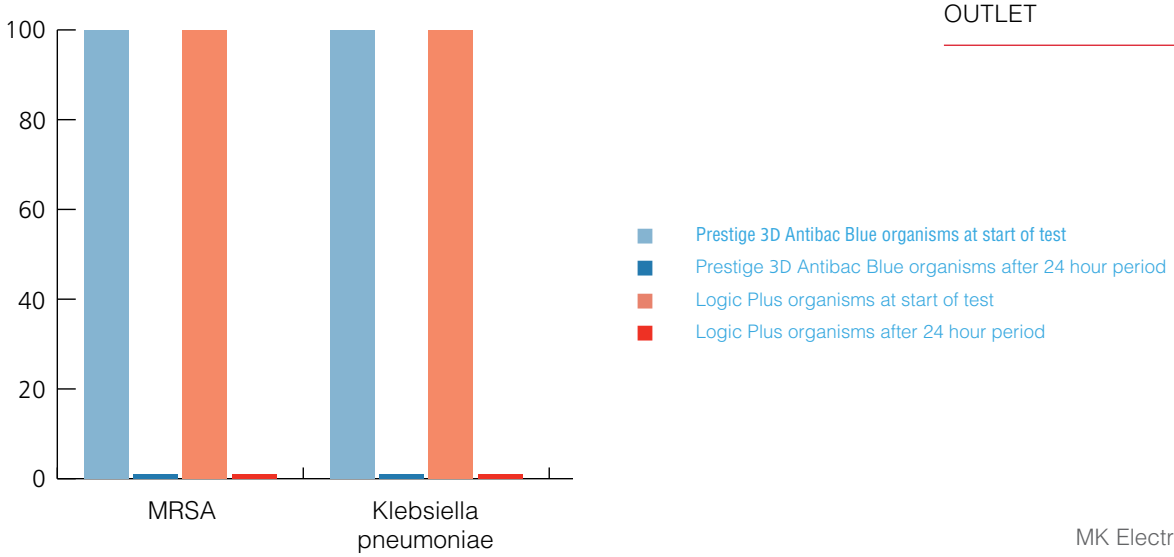

Prestige 3D Antibac Blue

DIVIDER KNOCKOUTS
Wiring is also made easy with 50 x 21mm knockouts at 100mm intervals along compartment dividers, providing instant access to mounting boxes, with no drilling or cutting.

BACK BOXES
1, 2 and 3 gang 45mm deep back boxes and 1 and 2 gang 40mm frames ensure Cat 5e, 6 and 7 compliance and ease of connection to power and data devices. The open top/bottom allows unhindered tool free cable entry, through the trunking compartment divider knockout. The back box can slide to align with appropriate knockout (see technical pages for restrictions on use).

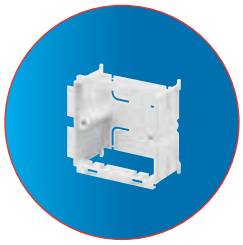

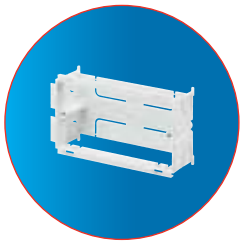

END CAPS
Neatly finishes runs of trunking. (Moulding provides internal location for extra security from optional screw fixing).

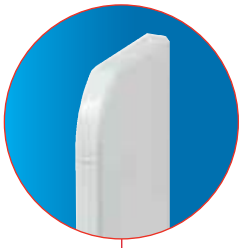

PRE-PUNCHED BASES
Wall fixing is simplified by the inclusion of pre-punched oval holes at 100mm intervals, ensures no drilling is required.

INTERNAL CORNER
Designed to accommodate irregularities in the squareness of the corner with a +/- 5 degrees flexibility range. The centre split gives maximum adjustment. Covers are radiused and compatible with Cat 5e, 6 and 7 data cabling requirements.

PART M
Compliance to Part M building regulations can be achieved using Part M flange or charcoal devices.

SCREW FIXING KIT
Where higher security is required, e.g. schools, all fitting covers can be secured using the Screw Fixing Kit.

The Screw Fixing Kit is self-locating on the styling line of the system and has a cover to hide the screw head.

Prestige 3D Antibac Blue

UNIQUE FLUORESCENCE
For complete customer confidence, Prestige 3D Antibac Blue features a patented fluorescent additive which glows bright blue under a UV light, unlike standard PVCu which glows dull purple.

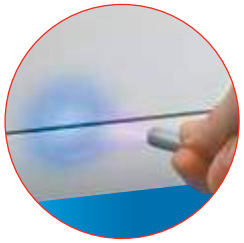

PRESTIGE 3D ANTIBAC BLUE

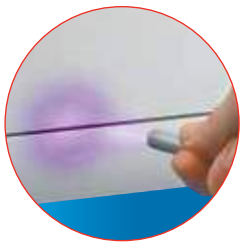

PRESTIGE 3D

FLAT TEES AND ANGLES
The ingenuity of the patented tee design allows a variety of cable drop permutations. The tee's bridge can be fitted in two positions increasing the versatility of cable runs whilst maintaining the correct segregation and Cat 5e, 6 and 7 compliance. Screw fixing hole locations have a protective shroud to prevent the chafing of cables.

Both the Flat Angle and Tee compartment divider walls are curved (Cat 5e, 6 and 7 compliant) to allow data cables to lay in with no loss of capacity. The covers are one piece and clip securely into place, and the base is also a single moulded item, giving more strength than fabrication. Joint covers are not required where the tee/angle meets the trunking as the moulded covers now overlap the junction.

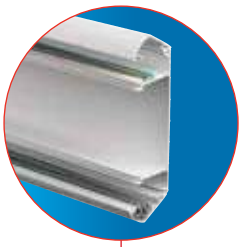

TRUNKING HINGE LIDS
A two stage location gives a hinge effect, enabling cables to be supported by the trunking cover during the installation. Cover design avoids dust traps and makes cleaning easier, and continues the aesthetics of the trunking.

STYLING LINES
All fittings are moulded with styling lines for aesthetic continuity.

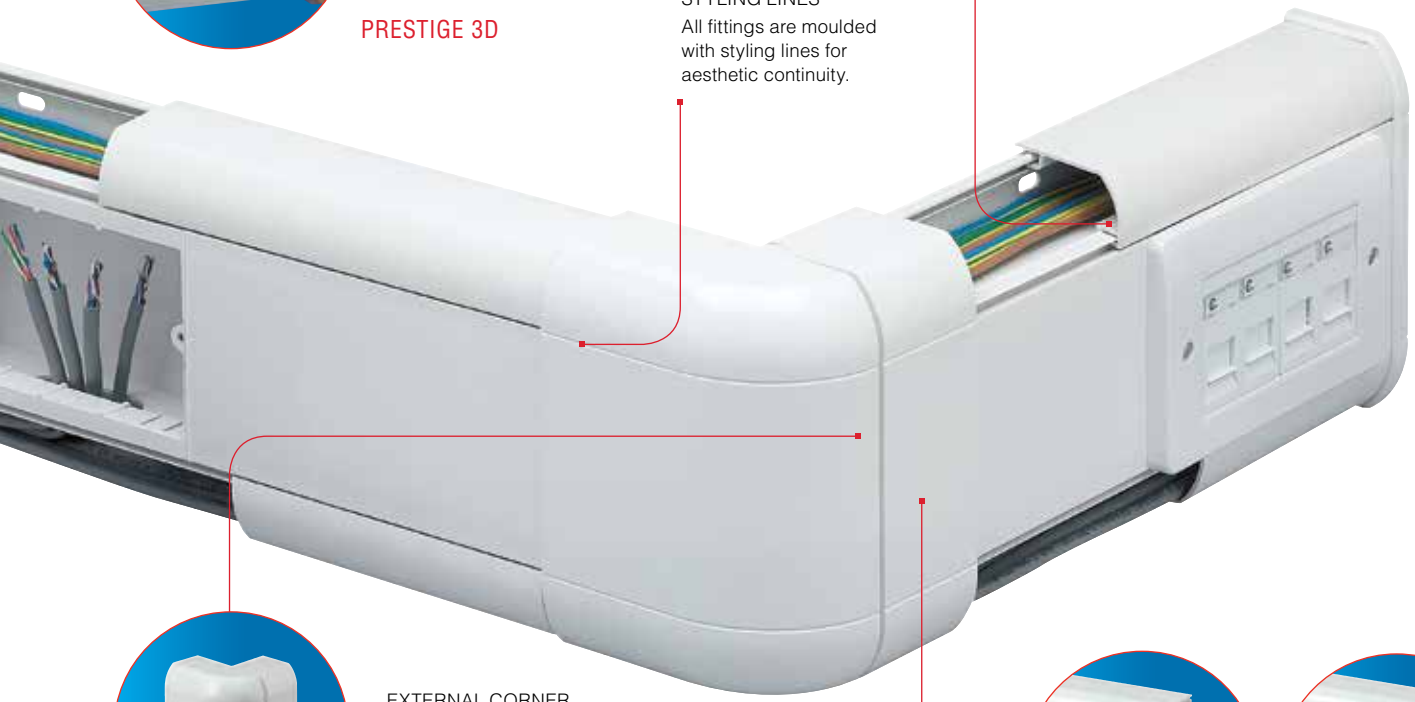

EXTERNAL CORNER
External Corners accommodate +/- 5 degree irregularities in the squareness of a corner. Corners come ready assembled to click into place, and offset side splits hide the effect of the split line for aesthetics.

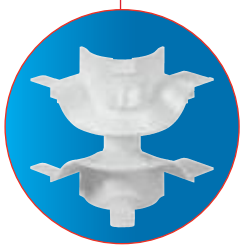

DATA SWEEP
The unique patented Data Sweep provides Cat 5e, 6 and 7 data cabling compliance, with no loss of capacity and without the need for bulky, protruding corner covers.

ELECTROMAGNETIC INTERFERENCE
Additional data cable/signal protection is provided by fitting screening divider VP30.

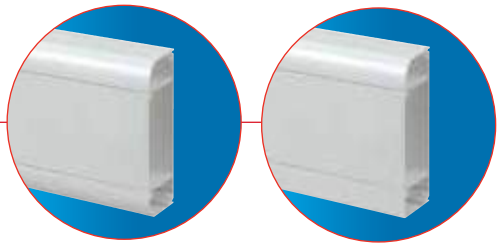

CHOICE OF TWO PROFILES
Available in Dado and Skirting profiles to suit most installations.

Prestige 3D Antibac Blue

Profile Lengths

Fittings

Component Selector Chart	Main Carrier*	Straight Cover	Curved Cover	Square Cover	Flexible Internal Corner	Flexible External Corner	End Cap
	3 METRES 6m	3 METRES 6m	3 METRES 30m	3 METRES 30m	2	CONSISTS OF COVER AND DATA SWEEP 2	SUPPLIED AS LEFT AND RIGHT-HAND PAIR 2
		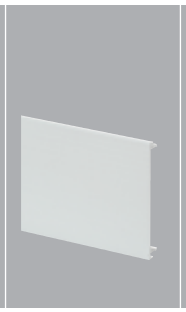					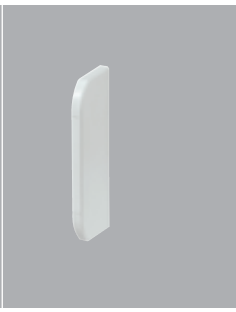
DADO 170 X 57MM	VP180WHI	VPAB100WHI	VPAB110WHI X2		VPAB181WHI	VPAB182WHI	VPAB183WHI
SKIRTING 170 X 57MM	VP180WHI	VPAB100WHI	VPAB110WHI	VPAB115WHI	VPAB191WHI	VPAB192WHI	VPAB193WHI

* Carrier components do not require the antibacterial additive as they have no exposure once the installation is complete. As such, the standard main carrier is sufficient, as are standard back boxes, mounting frames and cable retainers. The carrier components of the External Corner, Flat Angle and Flat Tee are also standard PVCu due to no exposure once installation is complete.

Prestige 3D Antibac Blue

Accessories

Joint Cover
2

Flat Angle
CONSISTS OF COVER AND CARRIER
1

Flat Tee
CONSISTS OF COVER AND CARRIER
1

Flange and Socket Spacer

Open Back Boxes

Open Mounting Frames*

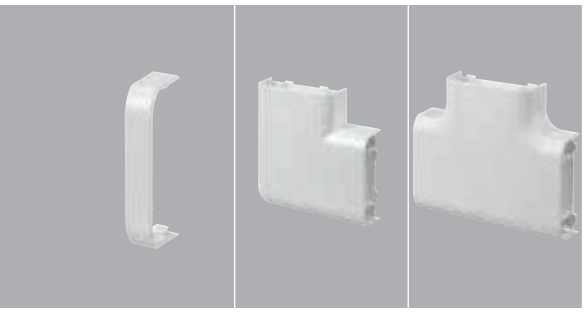

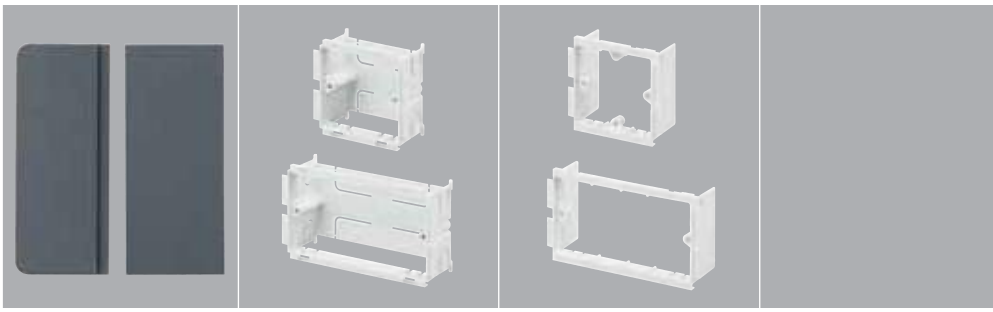

VPAB184WHI	VPAB185WHI	VPAB187WHI

VXAB40CHA* 20
PART M FLANGE FITTED BOTH SIDES OF A DEVICE

VXAB41CHA* 10
PART M SOCKET SPACER

VPAB129WHI** 50
SOCKET SPACER

Provides colour contrast with wiring device to comply with Part M.
* Visible width is 25mm after installation.
** Visible width is 9mm after installation.

VP121WHI 25
1 GANG 45MM OPEN BACK BOX

VP122WHI 10
2 GANG 45MM OPEN BACK BOX

VP123WHI 5
3 GANG 45MM OPEN BACK BOX

VP131WHI 25
1 GANG 40MM OPEN MOUNTING FRAME

VP132WHI 10
2 GANG 40MM OPEN MOUNTING FRAME

1 Gang frame is used in vertical applications.
Wings may be removed for greater wiring space.

*Open mounting frames are only suitable where services running in the centre compartment are the same as that of the accessory.

VPAB194WHI	FLAT ANGLE UP VPAB195WHI FLAT ANGLE DOWN VPAB196WHI	VPAB197WHI

Cable Retainer

Screw Fixing Kit

Screening Divider

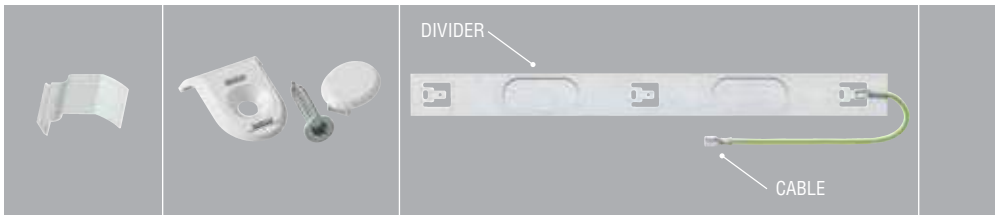

VP105WHI 50
CABLE RETAINER

VTSAB1000WHI 20
SCREW FIXING KIT

VP30** 15m
1.5M SCREENING DIVIDER

VX31 10
300MM SCREEN CONNECTING CABLE

**Cable not included

CASE STUDY

GLASGOW ROYAL INFIRMARY GETS A HEALTHY DOSE OF PRESTIGE 3D ANTIBAC BLUE

Infection control is a major concern in the healthcare sector. To help reduce the risk of spreading infections, bacteria and more, Glasgow Royal Infirmary's Intensive Care Unit installed more than 55 metres of Prestige 3D Antibac Blue during a recent refurbishment — becoming the first hospital in the UK to improve patient and staff safety through antibacterial cabling.

BENEFITS

COMPLETE SOLUTION

Only MK Electric offers a complete antibacterial solution that includes both wiring devices and cable management, but the single course for every product was just one of the reasons that the Glasgow Royal Infirmary chose Prestige 3D Antibac Blue.
The product is also complete in that it offers effective protection against both gram-positive and gram-negative bacteria rather than just one.

BEYOND HEALTHCARE

Of course, the hospital would not have chosen Prestige 3D Antibac Blue if it wasn't also an outstanding cable management solution above and beyond its health benefits. Like any healthcare facility, Glasgow Royal Infirmary's Intensive Care Unit has a large number of people moving about at any given time. The cable management provided by MK Electric not only ensures proper cabling to all equipment, but also ensures a clean, uncluttered work area for added safety.

For Glasgow Royal Infirmary's Intensive Care Unit, Prestige 3D Antibac Blue is an investment that's sure to have a healthy return.

PRESTIGE 3D COMPACT

RANGE INTRODUCTION

Prestige 3D Compact completes the 3D offering with all the 3D benefits of faster installation, Cat 5e, 6 and 7 compliance and improved aesthetics, but in a smaller footprint & ideal for confined locations.

The new concept uses the full trunking depth with a sliding open box (frame) principle to ease power and data connections.

HOW TO SPECIFY

A range of compact 3 compartment Dado and Skirting manufactured from recycled PVCu, designed with a curved covers to compliment MK Logic Plus accessories. Cat 5e, 6 and 7 compliant on all Tees, Angles, Internal and External corners utilising data sweeps that ensure no loss of capacity without the need for bulky protruding covers. Products to have pre-punched bases and divider knockouts at 100mm intervals to facilitate easy installation without the need for drilling and cutting.

FEATURES & BENEFITS

CAT5E, 6 & 7 COMPLIENT
Flexible Internal and External Corners, moulded Flat Angles and Tees

TOOL FREE CABLE ENTRY
Unique 'open box' mounting frames combined with divider knockouts to provide unhindered tool-free cable entry

MAXIMISES CAPACITY
Innovative External Corner Data Sweep allows continuous cable capacity and maintains the minimum trunking depth

PRE-DRILLED TRUNKING BASES
Eliminates the need to measure and drill fixing holes on site thus reducing installation time

HINGED LID
Mounting frames for LJU6/Euro data outlets to maximise use of space

STYLISH AND ROBUST
Curved outer covers that complement MK Logic Plus accessories

MADE FROM 100% RECYCLED PVCu*

10 YEAR GUARANTEE

*Based on 2014 consumption

Prestige 3D Compact

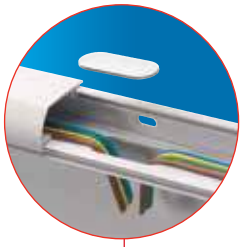

DIVIDER KNOCKOUTS
Wiring is also made easy with 50mm x 21mm knockouts at 100mm intervals along compartment dividers, providing instant access to mounting boxes with no drilling or cutting.

MOUNTING FRAMES
1 gang and 2 gang 'open box' mounting frames use the full trunking depth allowing ease of connection to power and data devices. The open top/bottom allows unhindered tool free cable entry through the trunking compartment divider knockout. The frame can slide to align with appropriate knockout.

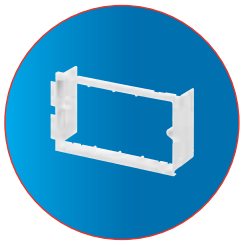

END CAPS
Neatly finishes runs of trunking. Moulding provides internal location for extra security from optional screw fixing.

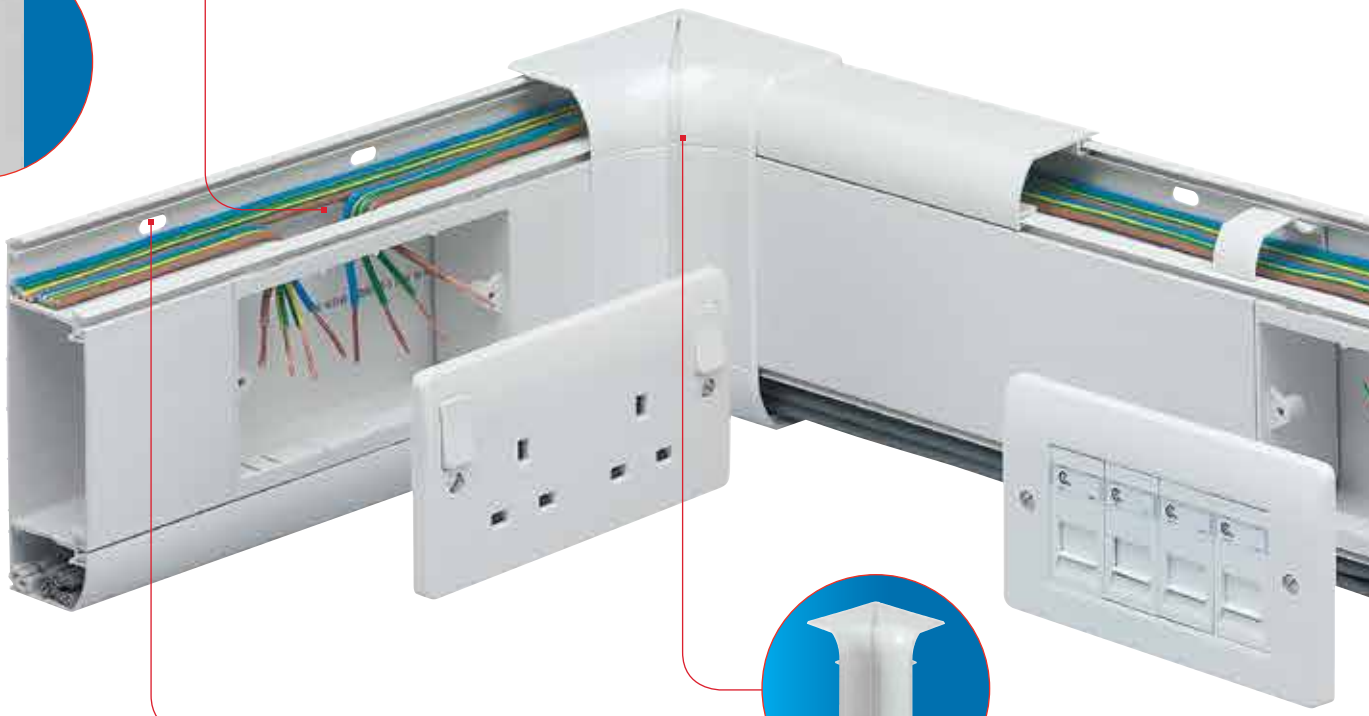

PRE-PUNCHED BASES
Wall fixing is simplified by the inclusion of pre-punched oval holes at 100mm intervals, ensures no drilling is required.

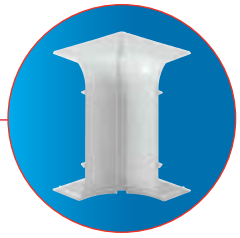

INTERNAL CORNER
Designed to accommodate irregularities in the squareness of the corner with a +/- 5 degree flexibility range. The centre split gives maximum adjustment. Covers are radiused and compatible with Cat 5e, 6 and 7 data cabling requirements.

SCREW FIXING KIT
Where higher security is required, all fitting covers can be secured using the Screw Fixing Kit. The Screw Fixing Kit is self-locating on the styling line of the system and has a cover to hide the screw head.

Prestige 3D Compact

FLAT TEES AND ANGLES

The ingenuity of the patented tee design allows a variety of cable drop permutations. The tee's bridge can be fitted in two positions increasing the versatility of cable runs whilst maintaining the correct segregation and Cat 5e, 6 and 7 compliance. Screw fixing hole locations have a protective shroud to prevent the chafing of cables.

Both the Flat Angle and Tee compartment divider walls are curved (Cat 5e, 6 and 7 compliant) to allow data cables to lay in with no loss of capacity. The covers are one piece and clip securely into place, and the base is also a single moulded item, giving more strength than fabrication. Joint covers are not required where the tee/angle meets the trunking as the moulded covers now overlap the junction.

ELECTROMAGNETIC INTERFERENCE

Additional data cable/signal protection is provided by fitting screening divider VCT30.

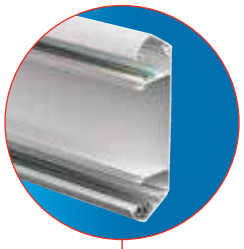

TRUNKING HINGED LIDS

A patented two stage location gives a hinge effect, enabling cables to be supported by the trunking cover during the installation. Cover design avoids dust traps and makes cleaning easier and continues the aesthetics of the trunking.

STYLING LINES

All fittings are moulded with styling lines for aesthetic continuity.

EXTERNAL CORNER

External Corners accommodate +/- 5 degree irregularities in the squareness of a corner. Corners come ready assembled to click into place, and offset side splits hide the effect of the split line for aesthetics.

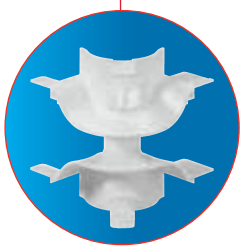

DATA SWEEP

The unique patented Data Sweep provides Cat 5e, 6 and 7 data cabling compliance, with no loss of capacity and without the need for bulky, protruding corner covers.

CHOICE OF TWO PROFILES

Available in Dado and Skirting profiles to suit most installations.

Available in white and charcoal.

Prestige 3D Compact

Profile Lengths

Component Selector Chart	Main Carrier	Extension Carrier	Straight Cover	Curved Cover	Extension Cover
	3 METRES 6m	3 METRES 15m	3 METRES 30m	3 METRES 30m	3 METRES 15m
				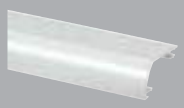	
 DADO 140 X 45MM	VCT140WHI		VCT100WHI	VCT110WHI X2	
 EXTENDED DADO 160 X 45MM	VCT140WHI	VCT160WHI	VCT100WHI	VCT110WHI	VCT120WHI

Prestige 3D Compact

Fittings

Flexible Internal Corner	Flexible External Corner	End Cap	Joint Cover	Flat Angle Up	Flat Angle Down	Flat Tee
2	CONSISTS OF COVER AND DATA SWEEP 2	SUPPLIED AS PAIR OF LEFT AND RIGHT-HAND END CAPS 2	5	CONSISTS OF COVER AND CARRIER 2	CONSISTS OF COVER AND CARRIER 2	CONSISTS OF COVER AND CARRIER 1
						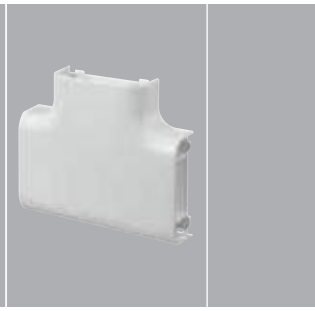
VCT141WHI	VCT142WHI	VCT143WHI	VCT144WHI	VCT145WHI	VCT145WHI	VCT147WHI
VCT161WHI	VCT162WHI	VCT163WHI (2X L/R PAIRS)	VCT164WHI	VCT165WHI	VCT166WHI	VCT167WHI (UP ONLY)

Prestige 3D Compact

Accessories

Socket Spacer

Part M Flange and Socket Spacer

Open Mounting Frames

Screening Divider

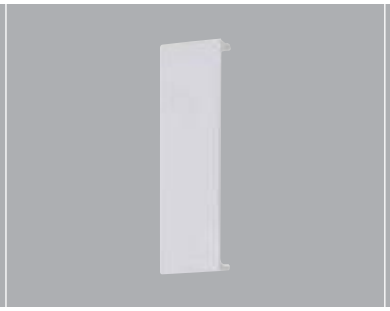

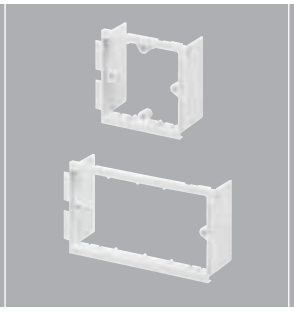

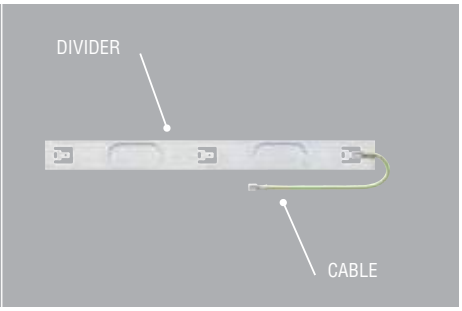

VCT25WHI 10
SOCKET SPACER

Visible width is 9mm after installation.

VX40CHA 20
VX40BLU 20
PART M FLANGE FITTED BOTH SIDES OF A DEVICE
VX41CHA 10
VX41BLU 10
PART M SOCKET SPACER

Provides colour contrast with wiring device to comply with Part M.
Visible width is 25mm after installation.

VCT121WHI 25
1 GANG 40MM OPEN MOUNTING FRAME
VCT122WHI 10
2 GANG 40MM OPEN MOUNTING FRAME

Wings may be removed for increased wiring space.

VCT30* 15m
1.5M SCREENING DIVIDER
VX31 10
300MM SCREEN CONNECTING CABLE

* Cable not included

Adaptors

SUITABLE FOR 20 AND 25MM CONDUIT AND YT2 AND YT4 MINI-TRUNKING. CONSISTS OF COVER AND CENTRE COMPARTMENT CABLE BRIDGE

Cable Retainer

Screw Fixing Kit

MCB/RCD Housing

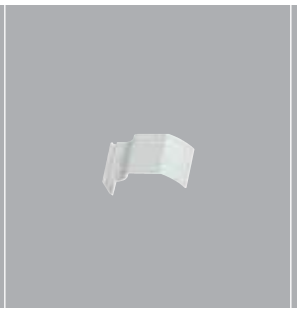

VCT148WHI 10
FOR USE WITH COVER VCT110WHI

VCT105WHI 50
CABLE RETAINER

VTS1000 20
SCREW FIXING KIT

VCT35WHI 1
MCB/RCD HOUSING WITH COVER (ACCESSORY NOT SUPPLIED)

Mounts directly to central compartment of trunking to accept up to 2 x one module products from the Sentry range of MCBs and RCDs (excluding one module RCBOs).

PRESTIGE 2COM

RANGE INTRODUCTION

Prestige 2com trunking is designed to meet the needs of current and future data cabling.

Prestige 2com is Cat 5e, 6 and 7 compliant and provides maximum capacity for data cabling.

HOW TO SPECIFY

A range of 60mm deep 2 compartment Dado trunking manufactured from recycled PVCu, designed with covers to maximise data channel cabling. Cat 5e, 6 and 7 compliant on all Tees, Angles, Internal and External corners to avoid deformation. Products to have pre-drilled trunking bases at 100mm intervals to facilitate easy installation without the need for drilling and cutting.

FEATURES & BENEFITS

CAT 5e, 6 & 7 COMPLIANT

50mm radius bends on all corners so cables lie in trunking correctly to avoid any deformation which may result in signal distortion and loss

MAXIMISES CAPACITY

60mm deep trunking with two equal compartments to maximise data channel cabling

FLEXIBLE ACCESSORIES

Accessories can be mounted on either or both compartments – enables maximum use of wiring space in one compartment

FRAMES MAXIMISE SPACE

Mounting frames for LJU6/Euro data outlets to maximise use of space

STYLISH AND ROBUST

Single piece end caps, corners and couplers for improved aesthetics and solid construction. Screw fix option for security of corner fittings

PRE-DRILLED TRUNKING BASES

Eliminates the need to measure and drill fixing holes on site thus reducing installation time

ALL EXTRUSIONS MANUFACTURED FROM 100% RECYCLED MATERIAL*

* Based on 2014 consumption.

Prestige 2com

AESTHETIC PROFILE
Stylish, contoured elegance.

ACCESSORY MOUNTING BOXES AND FRAMES
All boxes have facility to 'knockout' back for greater depth.

35mm boxes for larger cabling size requirements, deep accessories, data and power.

Accessories can be mounted in either or both compartments.

END CAPS
Neatly finish runs of trunking. Supplied as sets of right and left hand pairs including retainers and covers.

One-piece cover simplifies installation.

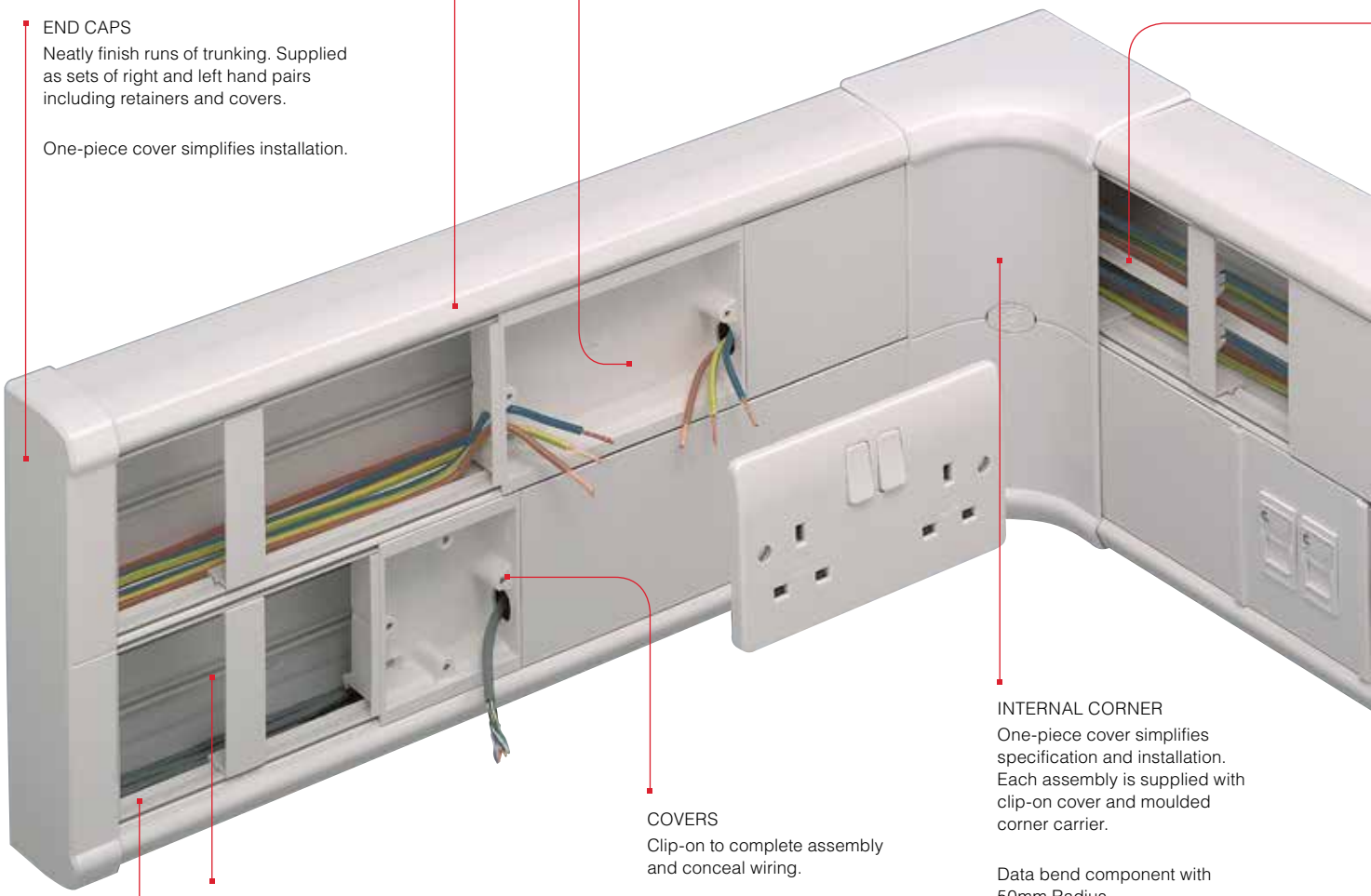

INTERNAL CORNER
One-piece cover simplifies specification and installation. Each assembly is supplied with clip-on cover and moulded corner carrier.

Data bend component with 50mm Radius.

Screw fix option
Unobtrusive screw fixings to maximise security against tampering.

COVERS
Clip-on to complete assembly and conceal wiring.

CABLE RETAINERS
Hold cables securely in place.

MAIN CARRIER
Pre-drilled at 100mm centres for ease and speed of installation.

Prestige 2com

EXTERNAL CORNER

One-piece cover component for ease of assembly and styling. Each assembly is supplied with clip-on cover and moulded corner carriers.

Data bend component with 50mm Radius.

Screw fix option: unobtrusive screw fixings to maximise security against tampering.

FLAT TEES AND ANGLES

These enable the Prestige 2com trunking configuration to follow the contours of the installation in the vertical plane and include 50mm radius inserts to ensure continued data cable protection.

CABLE DIVIDER

Sub-divides internal compartments.

2 COMPARTMENTS

For maximum data cable capacity complete compartment area can be used.

MINI TRUNKING ADAPTORS

For cable distribution to and from Prestige 2com a range of MK mini trunking and Egatube Conduit can be used.

COUPLER

One-piece cover component for ease of assembly. Each assembly is supplied with carrier moulding and clip-on cover (shown below).

CROSSOVER BRIDGE

Permits cabling to cross from one cable compartment to another within the assembly, whilst maintaining segregation.

Prestige 2com

Main Carrier

DIMENSIONS
210 X 60MM

VTS2001WHI 6m
3 METRE LENGTHS

VTS2001D1WHI 4m
2 METRE LENGTHS
for (non uk) markets

Not supplied with lid (cover)

Straight Cover

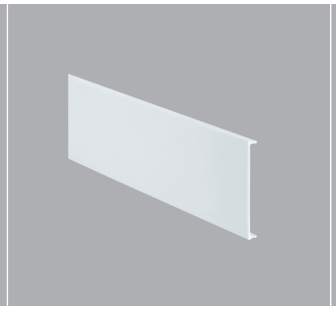

VTS5WHI 30m
3 METRE LENGTHS

VTS5D1WHI 20m
2 METRE LENGTHS
FOR (NON UK) MARKETS

Note each main carrier requires two straight covers

Coupler Assembly

VTS2005WHI 2

Lid Joint Cover

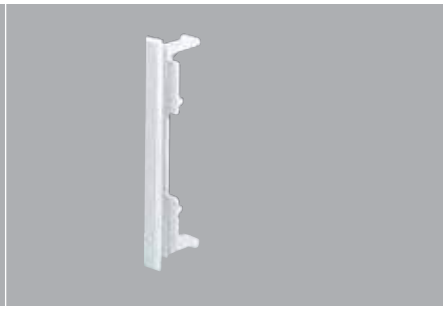

VTS2010WHI 10
USED TO JOIN 2 COVER PIECES AT REMOTE POINT FROM COUPLER

Cable Retainer

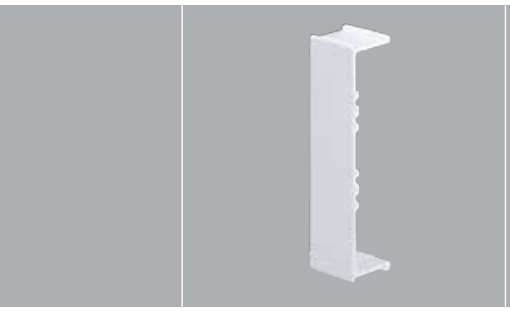

VTS2011WHI 10
CABLE RETAINER

Crossover Bridge

VTS2090WHI 10
CROSSOVER BRIDGE

Mini Trunking Adaptor

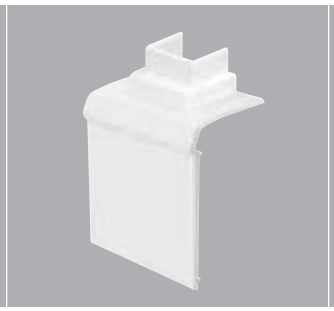

VTS2081WHI 10
YT1-YT3 MINI TRUNKING ADAPTOR.
USE APPROPRIATE YEA ADAPTOR (YEA1-YEA3) TO CONNECT MINI TRUNKING

VTS2084WHI 10
YT4 MINI TRUNKING ADAPTOR

Socket Spacer

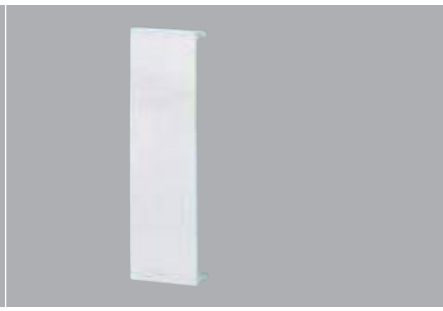

VTS25SWHI 10
ACCESSORY SOCKET SPACER TO ESTABLISH THE MINIMUM DISTANCE BETWEEN OUTLETS

Prestige 2com

Internal Corner Assembly

CONSISTS OF COVER AND CARRIER

VTS2004WHI 1
INCLUDES ADDITIONAL SCREW FIXING FOR EXTRA SECURITY
50MM RADIUS BEND

VTS2018WHI 10
SPARE INTERNAL SCREW COVERS FOR CORNER PIECES

External Corner Assembly

CONSISTS OF COVER, CARRIER AND RADIUS INSERT

VTS2003WHI 1
INCLUDES ADDITIONAL SCREW FIXING FOR EXTRA SECURITY
50MM RADIUS BEND

VTS2019WHI 10
SPARE EXTERNAL SCREW COVERS FOR CORNER PIECES

Radius Insert

EXTERNAL CORNER

VTS2009WHI 1
50MM RADIUS BEND INSERT FOR DATA CABLES EXTERNAL CORNER

End Cap Assembly

VTS2006WHI 2
END CAP ASSEMBLY

Cable Divider

VTS50WHI 30m
CABLE DIVIDER
3 METRE LENGTHS

Mounting Frames

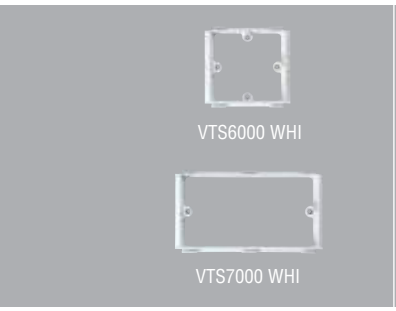

VTS6000WHI 10
1 GANG ACCESSORY MOUNTING FRAME

VTS7000WHI 5
2 GANG ACCESSORY MOUNTING FRAME

Flat Tee

VTS2014WHI 1
50MM RADIUS BEND

Flat Angle

VTS2012WHI 1
50MM RADIUS BEND

Prestige 2com

Accessory Boxes

VTS6035WHI

VTS7035WHI

VTS8028WHI

VTS4545WHI

VTS4545RWHI

VTS6025WHI 25
1 GANG 25MM DEEP

VTS6035WHI 25
1 GANG
35MM DEEP

VTS7025WH 10
2 GANG 25MM DEEP

VTS7035WHI 10
2 GANG 35MM DEEP

VTS8028WHI 5
3 GANG
28MM DEEP

VTS8035 10
3 GANG 35MM DEEP

K3716 100
BOX EARTH TERMINAL

VTS4545WHI 10
FLAT ADAPTOR PLATE
(NON UK)
45MM X 45MM APERTURE

VTS4545RWHI 10
RAISED ADAPTOR PLATE
(NON UK)
45MM X 45MM APERTURE

PRODUCT APPLICATION

ECHO 2 CHANNEL TRANSMITTER – ALBANY PLUS BRUSHED CHROME

Echo™ is an innovative range of entirely wireless, batteryless and self-powered switches and controls. Being wireless offers fantastic benefits, including instant installation and location flexibility. This reduces disruption and cost as there is no need to channel walls and run switching cables.

Prestige Poles and Posts

PRESTIGE POWER POLES

- Power Poles stand between the floor and ceiling and can be integrated with Interact Underfloor Power as part of a co-ordinated Cable Management system
- Particularly suited to raised floors and suspended ceilings, but can also be used with solid floors and ceilings
- Secured to the floor by a load plate
- A jacking assembly allows adjustment for varying ceiling heights as well as to secure it to the ceiling
- An extension bar is required for stability where the height exceeds 3.6 metres
- Outlet boxes can be located at virtually any height on the poles, so power and data points, light switches and accessory housings can be positioned quickly and easily at the optimum level for efficient operation
- All PVC extrusions manufactured from 100% recycled material*

PRESTIGE POWER POSTS

- Power Posts stand neatly on the floor and accept cables from below. They are ideal for raised floors but can also be installed on solid surfaces, fed for example from Cablelink Plus Screeded Floor Systems
- Fit unobtrusively under desks, and a single unit will provide up to twelve outlets for any combination of power and data points, light switches and accessory housings
- All PVC extrusions manufactured from 100% recycled material*

* Based on 2014 consumption.

Prestige Power Poles

PPA100WHI 1
POWER POLE ASSEMBLY WITH WHITE PAINTED ALUMINIUM BODY, WHITE PVC-U COVER AND 6 OUTLET BOXES

PPA100ALM 1
POWER POLE ASSEMBLY WITH ANODISED ALUMINIUM BODY, WHITE AND CHARCOAL PVC-U COVERS AND 6 OUTLET BOXES

Prestige Power Posts

PPT650WHI 1
POWER POST ASSEMBLY WITH WHITE PAINTED ALUMINIUM BODY, WHITE PVC-U COVER AND 5 OUTLET BOXES

PPT650ALM 1
POWER POST ASSEMBLY WITH ANODISED ALUMINIUM BODY, WHITE AND CHARCOAL PVC-U COVERS AND 5 OUTLET BOXES

Prestige Poles and Posts

Accessories for Poles and Posts

To allow flexibility in matching interior design and colour schemes, the pole and post bodies are available in a white epoxy coated or natural anodised aluminium finish, and the PVCu component covers come in charcoal or white.

The bodies accept a variety of co-ordinated accessories from MK's slim profile Edge and flawless Aspect ranges, to the Logic Plus range, as well as all other MK accessory ranges.

A matching MCB/RCD housing unit is available, also in charcoal or white.

PPC20WHI

PPCMHWHI

PPC40WHI

PPK1WHI

PPC50WHI

PPC20WHI 1
OUTLET BOX ASSEMBLY

PPC10WHI 3m
DIVIDING STRIP

PPC40WHI 1
TOP END COLLAR

PPC60WHI 10

PPC60CHA 10
POWER POST END CAP

PPCMHWHI 1

PPCMHCHA 1
MCB/RCD HOUSING
AVAILABLE IN A CHOICE OF TWO COLOURS, WHITE OR CHARCOAL
ACCEPTS UP TO 4 X ONE MODULE SENTRY PRODUCTS, EXCLUDING SINGLE MODULE RCBO'S, UP TO A MAXIMUM COMBINED RATING OF 63A (SEE PAGES 279-280).
THE HOUSING UNIT INCLUDES FIXING KIT, SENTRY MOUNTING DIN RAIL AND COVER MOULDING.

PPA100LIDWHI 2
SPARE LIDS
3.6M LENGTHS

PPK1WHI 1
EXTENSION BAR
FIXING KIT (0.9 METRE) FOR INSTALLATIONS WHERE THE HEIGHT FROM FLOOR TO SOLID CEILING (OR TO STRUCTURAL CONCRETE WHERE SUSPENDED CEILINGS ARE INSTALLED) EXCEEDS 3.6 METRES.

PPC50WHI 1
END LOAD PLATE

CASE STUDY

PRIVATE RESIDENCE

This UK-based designer was looking to create a home environment with modern and abstract design touches to the fore.

The highly contemporary interiors demanded something out of the ordinary, something unusual but nevertheless striking. MK was commissioned to manufacture working designs based on sketches from the client. The outcome was a customised range of products – both sockets and switches – that delivered both a uniqueness of design and that essential modern feel.

Available on a worldwide basis, the MK Design Service is supported by a dedicated team to ensure the seamless delivery of your chosen products.

To find out more visit www.mkelectric.co.uk

POWERLINK PLUS

RANGE INTRODUCTION

Powerlink Plus is a busbar trunking system developed to meet the power and data distribution needs of offices, schools and laboratories.

A comprehensive range of unique flush fitting accessories and gently curved covers combine to create a visually unrivalled installation. The system offers flexibility to easily adapt to future needs for the installer.

HOW TO SPECIFY

A busbar trunking system manufactured from recycled PVCu designed with plug in flush fitting accessories. Pre-fabricated corners and end caps supplied with carriers and busbar shields to provide maximum flexibility, systems integrity and protection. Pre-drilled trunking bases aid easy assembly and installation.

FEATURES & BENEFITS

CHOICE OF 3 PROFILES
To suit all your skirting and dado requirements

ONE-PIECE CORNER, COUPLERS AND END CAP COVERS
Simplifies installation and improves aesthetics

63A BUSBAR FOR PLUG-ON ACCESSORIES AND HIGH PROTECTIVE CONDUCTOR CURRENT COMPLIANCE
Quick and easy installation, eliminating the requirement for hard wiring

UNIQUE FLUSH FITTING ACCESSORIES
Provide an unobtrusive finish

PRE-DRILLED TRUNKING BASES
Eliminates the need to measure and drill fixing holes on site thus reducing installation time

LARGE DATA CABLING CAPABILITY IN OUTER COMPARTMENTS
For all your communication and data requirements

MADE FROM 100% PVCu
Powerlink Plus is both robust and easily workable on site

ALL EXTRUSIONS MANUFACTURED FROM 100% RECYCLED MATERIAL*

*Based on 2014 consumption.

Powerlink Plus

ACCESSORY SPACER
For mounting accessories as pairs or any number of in-line multiples.
One supplied with each 13A socket accessory.

PRE-WIRED CABLE ASSEMBLY
For electrical connection of busbar around corners.

FLUSH FITTING ACCESSORIES
Powerlink Plus offers a wide selection of flush fitting accessories, including switch sockets, DP switches, connection units and virtually every type of computer and telecom connector. All power accessories are available as plug-on units or with wire-in terminals. If that is not enough, an optional mounting kit will accept virtually any accessory within the entire MK range.

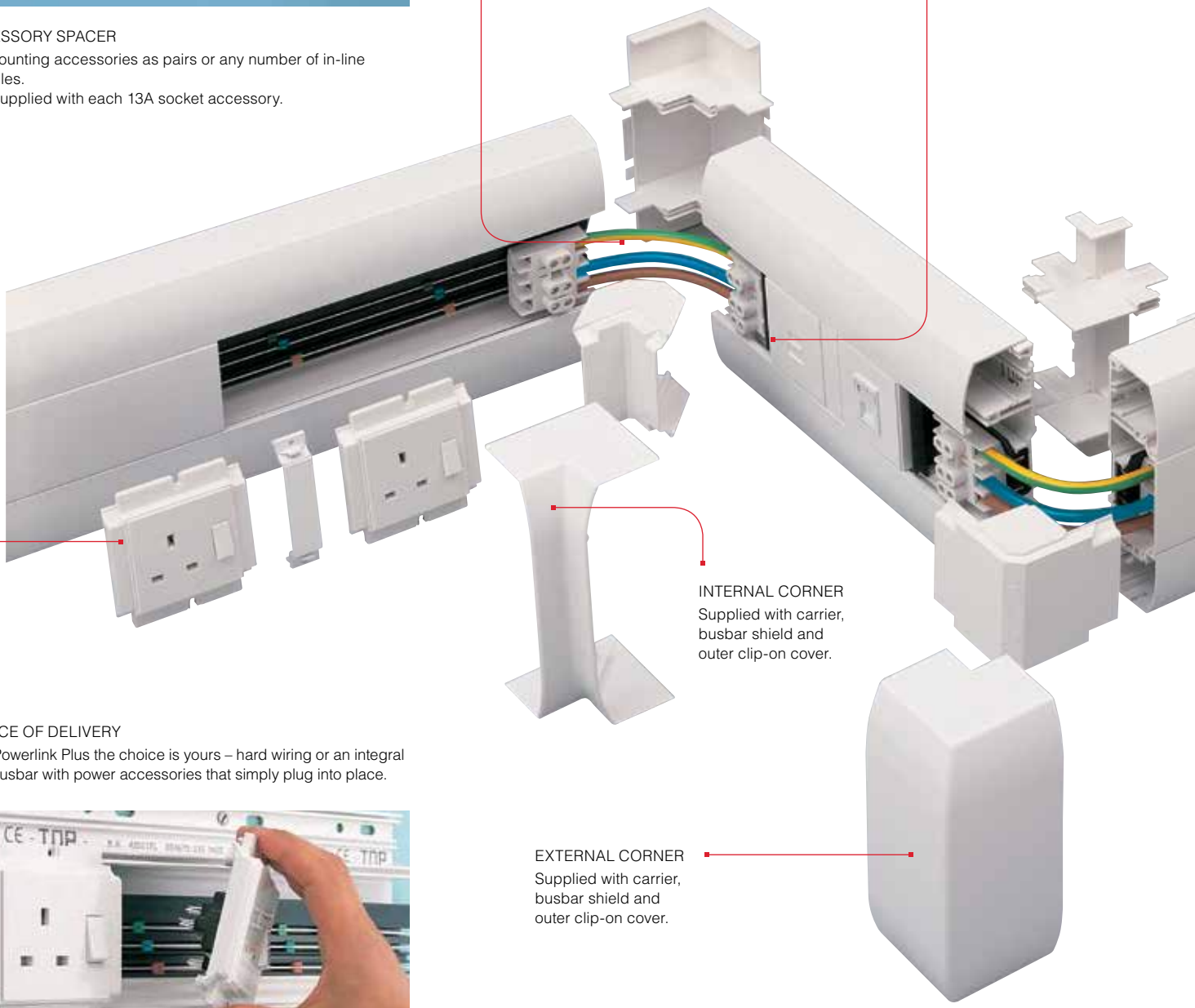

INTERNAL CORNER
Supplied with carrier, busbar shield and outer clip-on cover.

EXTERNAL CORNER
Supplied with carrier, busbar shield and outer clip-on cover.

CHOICE OF DELIVERY
With Powerlink Plus the choice is yours – hard wiring or an integral 63A busbar with power accessories that simply plug into place.

Powerlink Plus

MCB/RCD
Housing mounts directly to central compartment and accepts any one or two module product from the MK Sentry range (excluding RCBOs).

COUPLER
Joins trunking lengths together and to pre-assembled angles, crossovers or special corners. Supplied with busbar shield.

END CAP
Neatly finishes runs of trunking. Supplied with screw fix carrier/busbar shield and clip-on cover.

Powerlink Plus

Component Selector Chart

Standard length: 3 metres
Supplied with covers
Trunking size: 170mm (Height) x 50mm (Depth)
With extension fitted:
212mm (Height) x 50mm (Depth)
Material PVCu
Colour: White

Profile Lengths

	Trunking WITH AND WITHOUT 63 AMP BUSBARS		Coupler WITH BUSBAR SHIELD	
			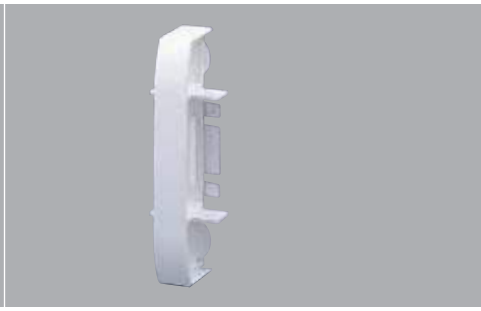	
Dado Trunking With Busbars	K1963WHI	3m	K1908WHI	5
Dado Trunking Without Busbars	K1903WHI	3m	K1908WHI	5
Skirting And Dado Trunking With Busbars	K1962WHI	3m	K1945WHI	5

Powerlink Plus

Fittings

End Caps	Internal Corner	External Corner
SUPPLIED AS A PAIR	WITH BUSBAR SHIELD	WITH BUSBAR SHIELD
K1904WHI 1 K1904CHA 1	K1905WHI* 1	K1906WHI* 1
K1904WHI 1	K1905WHI 1	K1906WHI 1
K1944WHI 1	K1911WHI* 1	K1912WHI* 1

*Requires 1 x 1919 Cable Link Assembly

Powerlink Plus

	Flat Angle	Flat Tee
Dado Trunking With Busbars	K1992WHI* 1 UP/DOWN	K1973WHI 1 UP K1972WHI 1 DOWN *Requires 2 x 1919 Cable Link Assembly
Dado Trunking Without Busbars	K1992WHI 1 UP/DOWN	K1973WHI 1 UP K1972WHI 1 DOWN
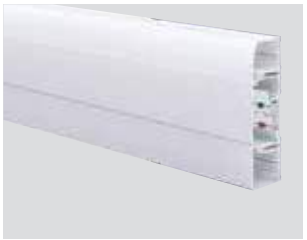 **Skirting And Dado Trunking With Busbars**	K1957WHI* 1 UP K1958WHI* 1 DOWN	

*Requires 1 x 1919 Cable Link Assembly

Powerlink Plus

Spares

Cable Retainers

VTS11WHI

VTS12WHI

Cable Entry Box

FLUSH

1922ALM

MCB/RCD Housing

K1949WHI

Mini Trunking Adaptors

K1926WHI

K1927WHI

Covers and Cable Divider

3 METRE LENGTHS

K1932WHI

K1935WHI

1934WHI

K1936WHI

VTS11WHI 10
CABLE RETAINERS
FOR USE WITH
EXTENSION
TRUNKING

VTS12WHI 10
CABLE RETAINERS
FOR USE IN OUTER
COMPARTMENTS

1922ALM 5
CABLE ENTRY BOX
FOR USE WITH
K1920 AND K1929

Three compartment flush mounted box with adjustable plate.
Included in the pack is a template for positioning on site prior to the trunking being installed.

DIMENSIONS
133 x 133 x 40mm

KNOCKOUTS
4 x 20mm
4 x 25mm

K1949WHI 1

Mounts directly to the centre compartment to accept up to 2 one module products from the MK Sentry range (except RCBOs).

DIMENSIONS
220mm (Length) x
100mm (Depth)
when mounted on trunking.

K1926WHI 10
YT4MINI TRUNKING
ADAPTOR
FOR USE WITH YEA
ADAPTORS FOR YT1, YT2
AND YT3 TRUNKING

Accepts MK Ega Mini Trunking adaptors.

K1932WHI 15m
OUTER COVER
SQUARE
SUPPLIED IN
3 METRE LENGTHS

K1935WHI 15m
OUTER COVER
CURVED
SUPPLIED IN
3 METRE LENGTHS

1934WHI 15m
CENTRAL COVER
STRAIGHT
SUPPLIED IN
3 METRE LENGTHS

K1936WHI 15m
EXTENSION COVER
SUPPLIED IN
3 METRE LENGTHS

Powerlink Plus

Socket Outlets

Switchsocket Outlets

'PLUG-ON'
13 AMP
STANDARD

1956WHI

'PLUG-ON'
13 AMP
STANDARD

1950WHI

1951WHI

'PLUG-ON'
13 AMP
NON STANDARD

1953WHI

'WIRE-IN'
13 AMP
STANDARD

1952WHI

'WIRE-IN'
13 AMP
NON STANDARD

1955WHI

1956WHI 5
STANDARD
SOCKET OUTLET

For plugging onto the busbars.
Supplied complete with one accessory spacer and fixing screws.

1950WHI 5
STANDARD SWITCHSOCKET
WITH NEON

1951WHI 5
STANDARD
SWITCHSOCKET

For plugging onto the busbars.
Supplied complete with one accessory spacer and fixing screws.

1953WHI 5
NON STANDARD
SWITCHSOCKET

For plugging onto the busbars.
With a 'T' shape earth pin aperture and for use only with the non standard 13A Safetyplug, list no. 647.
Supplied complete with one accessory spacer and fixing screws.

1952WHI 5
STANDARD
SWITCHSOCKET

Fitted with screw terminals for independent wiring.
Supplied complete with one accessory spacer and fixing screws.

1955WHI 5
NON STANDARD
SIDE WIRED
SWITCHSOCKET

Fitted with screw terminals for independent wiring. With a 'T' shape earth pin aperture and for use only with the non standard 13A Safetyplug, list no. 647.
Supplied complete with one accessory spacer and fixing screws.

Powerlink Plus

Connection Units

DP SWITCHED
'PLUG-ON'

1971WHI

1970WHI 5
WITH NEON AND
13A FUSE

1971WHI 5
WITH NEON
FLEX OUTLET AND
13A FUSE

For feeding from the busbars and controlling remote equipment. Supplied complete with fixing screws.

DP Switches

32 AMP
'PLUG-ON'

1943WHI

1943WHI 5
WITH NEON

For plugging onto the busbars. Can be used either as a busbar switch disconnector or for feeding and controlling remote equipment.
The switch can accommodate up to 10mm² cables. Supplied complete with fixing screws.

Two Way Switch

20 AMP SP

1942WHI

1942WHI 5

Can be used for lighting and remote equipment. It is not connected to the busbars and requires separate cables. Supplied complete with fixing screws.

Telephone Socket Outlets

1995WHI

1995WHI 5
HANDSET POLARISED
SOCKET OUTLET

1999WHI 5
RJ11
TELEPHONE/DATA SOCKET

1980 Supplied complete with enclosure box together with fixing screws, connecting tool, cable tie and fixing screws for mounting on to the dado trunking. A full list of instructions with wiring diagrams is supplied in every pack. Approved for use with telecommunication systems run by BT in accordance with the conditions in the instructions for use.
1995 Supplied complete with enclosure box together with fixing screws, connecting tool, cable tie and fixing screws for mounting on to the dado trunking. Approved for use with telecommunication branch systems in accordance with the conditions in the instructions for use.

Powerlink Plus

Data Outlets

RJ45

1978WHI

1976WHI

ELV Blank Plates

1986WHI

Flush Accessory Mounting Frames

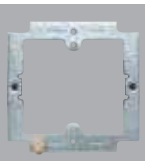

1928GLV

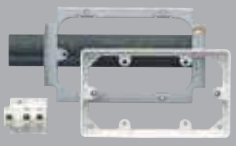

1946WHI

1998

12024SLT9

Trunking Accessories and Plug in Cable Terminations (3 Pole)

K1925WHI

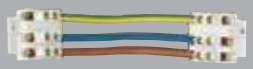

1919

1923WHI

1924WHI

1978WHI 5
RJ45 CATEGORY 5E
COMPUTER/DATA SOCKET

1976WHI 5
RJ45/EURO OUTLET
TWO MODULE UNSERVICED

1947WHI 5
RJ45/LJU6C OUTLET
TWO MODULE, UNSERVICED

1978 Data socket to Category 5e.
K1976 Euro 50x50mm (accommodates 2 outlets).
K1947 Cut out dimensions LJU6C 22x37mm for each outlet.

1986WHI 5
ELV BOX AND COVER

Can be punched for use with any ELV accessory that can be mounted over the busbars.
Supplied complete with enclosure box together with fixing screws for mounting on to the trunking.

1928GLV 10
2 GANG ACCESSORY MOUNTING KIT WITH FRAME AND PATTRESS

1946WHI 5
2 GANG ACCESSORY MOUNTING KIT WITH FRAME AND PATTRESS

1998 5
1 GANG MOUNTING FRAME & BOX FOR ELV ACCESSORIES

12024SLT9 10
MOUNTING FRAME FOR 2 GANG ACCESSORY

1928GLV For fixing standard single gang accessories to the trunking. The accessories can be connected to the busbars by using one of the cable termination components or wired separately. Complete with fixing screws.
1946 For fixing Sentrysockets, Filtered sockets and two gang accessories to the trunking. Supplied with busbar terminations and cover, mounting frame and extension pattress together with fixing screws.
1998 For fixing standard single gang extra low voltage outlets to the trunking. Supplied complete with enclosure box together with all the necessary fixing screws.

K1925WHI 10
PLUG IN BUSBAR COUPLER

1919 5
CABLE LINK ASSEMBLY

1923WHI 10
10MM² CABLE TERMINATION

1924WHI 10
25MM² CABLE TERMINATION

K1925 To connect lengths of individual busbars together. Rating 63A.
1919 Prewired corner cable link for internal and external corners.
Rating 63A.
1937 Suitable for bridging the central compartment, where there are no busbars (Busbars are coupled by cables passing underneath).
1939 To maintain segregation between the wall and the busbars or cables when installing Powerlink around a pillar of less than 125mm.
1923 To connect the busbar to the mains supply or to electrical accessories mounted onto mounting frames.
Rating: 50A.
1924 To connect the busbars to the mains supply and for connecting the busbars around corners (two required). Rating: 63A.

Powerlink Plus

Trunking Components and Spares

1909WHI

1930WHI

1933WHI

1909WHI CENTRAL COVER COUPLER	10
1930WHI ACCESSORY SPACER	10
1933WHI BUSBAR SECTION FOR DADO TRUNKING WITHOUT BUSBARS. SUPPLIED IN 3M LENGTHS	3m
11817PS CABLE TERMINATION & BUSBAR COVER SCREWS	100
11827PS FIXING SCREW BUSHES	100

PINNACLE

RANGE INTRODUCTION

When it comes to providing direct bench top access to low voltage electrical, communications and data services, MK Pinnacle is the flexible and versatile solution.

Styled to the same high standards as the MK Logic Plus™ range, it features a high quality finish, a curved design and twin segregated compartments. These features mean MK Pinnacle is the bench top solution for laboratories, schools and workshops.

HOW TO SPECIFY

A bench top trunking system manufactured from recycled PVCu designed to compliment MK Logic Plus accessories. Pre-fabricated corners to provide maximum flexibility, systems integrity and protection. Two separate compartments to provide cable segregation with the option to sub-divide the main compartment by means of a clip-in cable divider. Coupler sets provide fixing between two units while maintaining IP4X classification.

FEATURES & BENEFITS

UNIQUE CURVED APPEARANCE

Total physical and visual integration with the MK Logic Plus™ range

DESIGNED TO MEET THE 'HEAVY DUTY' REQUIREMENTS OF BS 4678 PART 4

Offers high levels of mechanical protection and electrical safety

VERSATILITY

MK Pinnacle is versatile. Available in single or double configuration, it can be installed with a choice of two profile heights and fascia angles

MADE FROM 100% PVCu

Pinnacle is robust, easily manipulated on site and non-corrosive

ALL EXTRUSIONS MANUFACTURED FROM 100% RECYCLED MATERIAL*

*Based on 2014 consumption.

Pinnacle

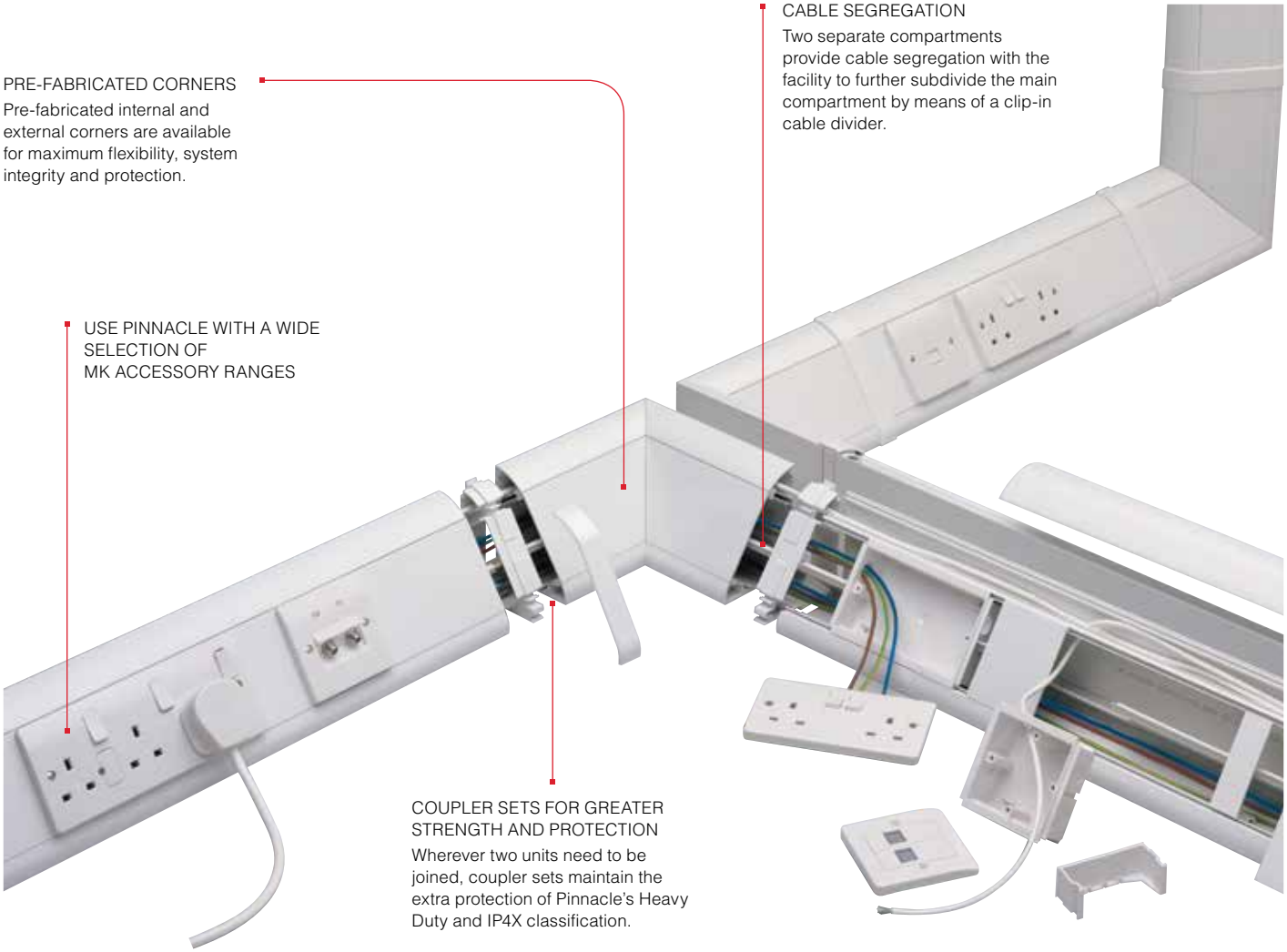

BENCH UNITS

One gang, two gang, two gang plus one gang and three gang bench units are available as single and two sided assemblies.

VERSATILITY

Available in single or double configuration, Pinnacle can be installed with a choice of two profile heights and fascia angles. The system may be installed horizontally or vertically.

UNDERSHELF

Pinnacle can be installed safely in any orientation, even conveniently tucked away under a shelf, giving easy and discreet access to power and data outlets.

Pinnacle

Trunking	End Caps	Coupler Set*
	PTS2WHI 4m SINGLE TRUNKING 2 METRE LENGTH SUPPLIED WITH LIDS 90MM HIGH X 105MM WIDE **PTS3WHI** 6m SINGLE TRUNKING 3 METRE LENGTH SUPPLIED WITH LIDS 90MM HIGH X 105MM WIDE	**PECSWHI** 10	**PCWHI** 10 *COUPLER SETS To maintain Heavy Duty and IP4X classification both coupler and joint cover must be used
	PTS2WHI 4m **PTS3WHI** 6m	**PECSWHI** 10	**PCWHI** 10 CONSISTS OF COUPLER AND JOINT COVER *COUPLER SETS To maintain Heavy Duty and IP4X classification both coupler and joint cover must be used
	PTD2WHI 2m **PTD3WHI** 3m	**PECDWHI** 5 PAIR 	**PCWHI** 10 CONSISTS OF COUPLER AND JOINT COVER *COUPLER SETS To maintain Heavy Duty and IP4X classification both coupler and joint cover must be used

Pinnacle

Internal Corner	External Corner	Cable Divider	Cable Retainer
FABRICATED	FABRICATED	2 METRE LENGTHS	
PICLWHI 1	PECLWHI 1	PD2WHI 20m	VTS11WHI 10
PICHWHI 1	PECHWHI 1	PD2WHI 20m	VTS11WHI 10
		PD2WHI 20m	VTS11WHI 10

Pinnacle

Bench Units

ONE GANG AND TWO GANG

PBUS1WHI

PBUD1WHI

PBUS2WHI

PBUD2WHI

TWO GANG PLUS ONE GANG

PBUS21WHI

PBUD21WHI

THREE GANG

PBUS3 WHI

PBUD3WHI

PBUS1WHI 1
1 GANG SINGLE BENCH UNIT WITH 1 GANG ACCESSORY BOX (VTS6035)

PBUD1WHI 1

Supplied complete with accessory boxes, end caps and pre-cut lids.

DIMENSIONS
PBUS1:
105mm high
90mm deep
130mm wide
PBUD1:
105mm high
185mm deep
130mm wide

PBUS2WHI 1
2 GANG SINGLE BENCH UNIT WITH 2 GANG ACCESSORY BOX (VTS7025)

PBUD2WHI 1

Supplied complete with accessory boxes, end caps and pre-cut lids.

DIMENSIONS
PBUS2:
105mm high
90mm deep
190mm wide
PBUD2:
105mm high
185mm deep
190mm wide

PBUS21WHI 1

Supplied complete with accessory boxes, end caps and pre-cut lids.

DIMENSIONS
PBUS21:
105mm high
90mm deep
290mm wide

PBUD21WHI 1
2 + 1 GANG DOUBLE BENCH UNIT WITH 2 X 2 GANG (VTS7025) AND 2 X 1 GANG (VTS6035) ACCESSORY BOXES

Supplied complete with accessory boxes, end caps and pre-cut lids.

DIMENSIONS
PBUD21:
105mm high
185mm deep
290mm wide

PBUS3WHI 1
3 GANG SINGLE BENCH UNIT WITH 3 GANG ACCESSORY BOX (VTS8028)

Supplied complete with accessory boxes, end caps and pre-cut lids.

DIMENSIONS
PBUS3:
105mm high
90mm deep
250mm wide

PBUD3WHI 1
3 GANG DOUBLE BENCH UNIT WITH 2 X 3 GANG ACCESSORY BOXES (VTS8028)

Supplied complete with accessory boxes, end caps and pre-cut lids.

DIMENSIONS
PBUD3:
105mm high
185mm deep
250mm wide

Accessory Boxes

Mounting Frames

Trunking Cover Spares

2 AND 3 METRE LENGTHS

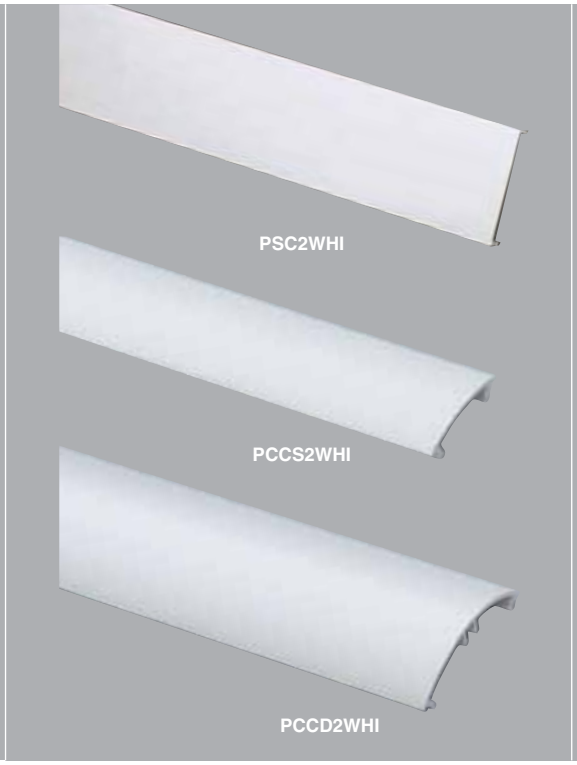

VTS6025WHI 25
1 GANG OUTLET BOX
25MM DEEP
HORIZONTAL AND
VERTICAL MOUNTING

VTS6035WHI 25
1 GANG OUTLET BOX
35MM DEEP
HORIZONTAL AND
VERTICAL MOUNTING

VTS7025WHI 10
2 GANG OUTLET BOX
25MM DEEP

VTS8035 5
3 GANG OUTLET BOX
35MM DEEP

VTS7035WHI 10
2 GANG OUTLET BOX
35MM DEEP

VTS8028WHI 5
3 GANG OUTLET BOX
28MM DEEP

VTS25SWHI 10
SOCKET SPACER TO ESTABLISH
THE MINIMUM DISTANCE
BETWEEN ACCESSORIES

K3716 100
BOX EARTH TERMINAL

VTS6000WHI 10
1 GANG
ACCESSORY MOUNTING FRAME

VTS7000WHI 5
2 GANG
ACCESSORY MOUNTING FRAME

PSC2WHI 20m
STRAIGHT COVER

PCCS2WHI 20m
CURVED COVER FOR SINGLE
TRUNKING (2M)

PCCD2WHI 10m
CURVED COVER
FOR DOUBLE
TRUNKING (2M)

VTSKMH1WHI 1
MCB/RCD HOUSING
WITH COVER
(ACCESSORIES NOT
PROVIDED)

Mounts directly to trunking to accept up to 2 x one module products from the Sentry range of MCBs and RCDs (excluding one module RCBOs).

PREMIER

RANGE INTRODUCTION

Premier is a modern integrated trunking system which provides the means to distribute power, data and telecom services around buildings.

A wide range of snap fit mouldings, including reducers, make it easy to run continuous lengths of trunking as cable feeders and, where required, to provide dado trunking with the necessary power, data and telecom outlets.

Premier trunking is also compliant with Cat 5e and 6 data cable installation, and the MK Aspect and Logic Plus accessory ranges complement the style and finish of Premier Trunking.

HOW TO SPECIFY

An modern integrated trunking system compliant with Cat 5e and 6. Manufactured from recycled PVCu and designed to compliment MK Logic Plus accessories. Clip on covers provide continuous access for wiring devices and aid assembly and installation. Internal and external corners eliminate the need to mitre corners whilst ensuring data bend radiuses. Internal cable dividers provide segregation of services and adaptors provide integration to minimum trunking for local distribution.

FEATURES & BENEFITS

SIMPLE, CLEAN LINES
Stylish and unobtrusive finish

WIDE RANGE OF INTEGRATED COMPONENTS
Maximises versatility in application

CLIP-ON COVERS PROVIDE CONTINUOUS ACCESS FOR WIRING MODIFICATIONS
Easy to assemble and install

DATA CORNERS PROVIDE 32MM RADIUS COMPATIBLE WITH CAT 5E AND CAT 6 DATA CABLES
Enables data cables to perform to their maximum capabilities (NCT1050 only)

TAPERED JOINTS PROVIDE COMPLETE PROTECTION AT JUNCTIONS MASKING CUT ENDS
Uniform and neat finish to any installation

MADE FROM 100% PVCu
Premier is both robust and easily workable on site

ALL EXTRUSIONS MANUFACTURED FROM 100% RECYCLED MATERIAL*

*Based on 2014 consumption.

Premier

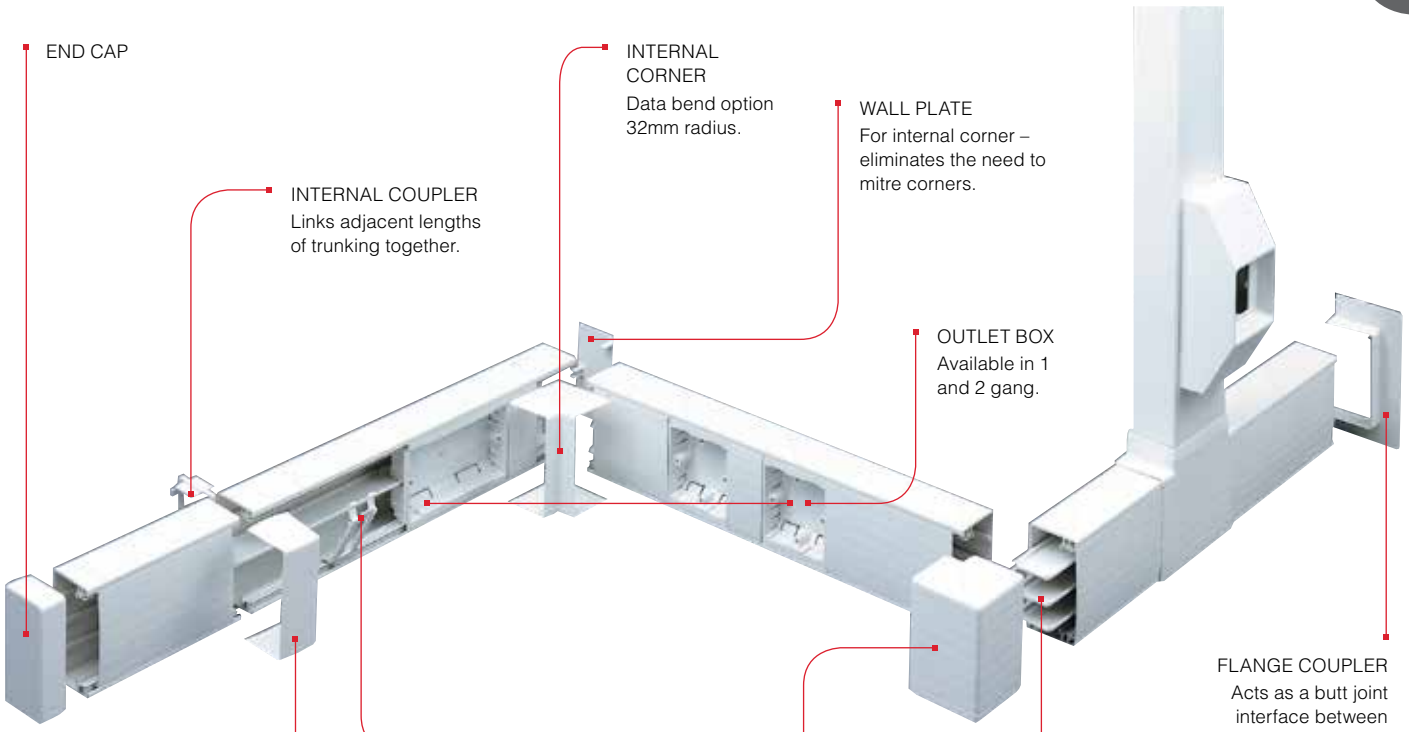

Adaptors provide integration with Ega Mini and Communication Trunking for local distribution.

Moulded flat cross available for all distribution trunking.

Premier

Material:
Pvcu Colour:
White

Trunking

3 METRE LENGTHS

2 METRE LENGTHS

SPARE TRUNKING LID
3 METRE LENGTHS

Internal Coupler

MOULDED

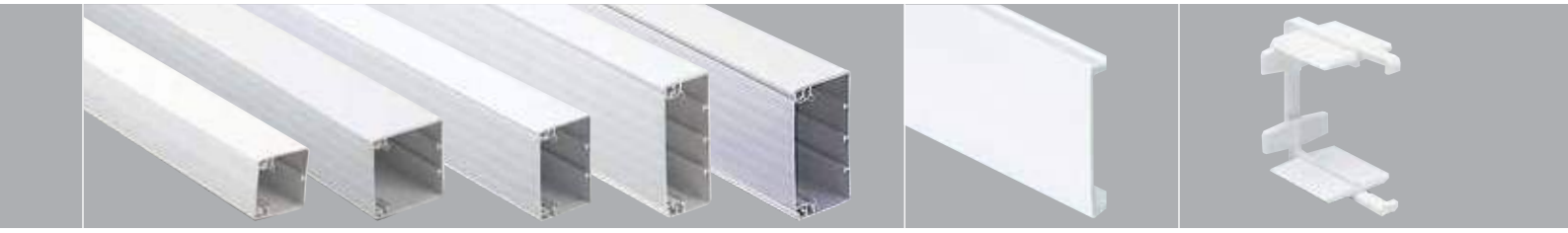

50 X 50MM	NCT5050WHI	12m	NCT5050D1WHI*	12m	NCT50LIDWHI	12m	NCI5050WHI	5
75 X 50MM	NCT7550WHI	12m	NCT7550D1*	12m	NCT50LIDWHI	12m	NCI7550WHI	5
75 X 75MM	NCT7575WHI	12m	NCT7575D1*	8m	NCT75LIDWHI	12m	NCI7575WHI	5
100 X 40MM	NCT1040WHI	12m	NCT1040D1*	8m	NCT100LIDWHI	12m	NCI1040WHI	5
100 X 50MM	NCT1050WH	12m	NCT1050D1*	8m	NCT100LIDWHI	12m	NCI1050WHI	5
100 X 100MM	NCT1010WHI	12m	NCT1010D1*	8m	NCT100LIDWHI	12m	NCI1010WHI	5

* 2 metre lengths are available for NON UK markets

External Corner

MOULDED

WITH DATA CORNER
MOULDED

Internal Corner

MOULDED

WITH DATA CORNER
MOULDED

50 X 50MM	NAE5050WHI	2			NAI5050WHI	2		
75 X 50MM	NAE7550WHI	2			NAI7550WHI	2		
75 X 75MM	NAE7575WHI	2			NAI7575WHI	2		
100 X 40MM	NAE1040WHI	2			NAI1040WHI	2		
100 X 50MM	NAE1050WHI	2	NDAE1050WHI	2	NAI1050WHI	2	NDAI1050WHI	2
100 X 100MM	NAE1010WHI*	1			NAI1010WHI*	1		

* Fabricated

Data corner provides 32mm (1¼" or 1.25") radius compatible with Cat 5e and 6 data cables

* Fabricated

Data corner provides 32mm (1¼" or 1.25") radius compatible with Cat 5e and 6 data cables

Premier

Joint Cover

MOULDED

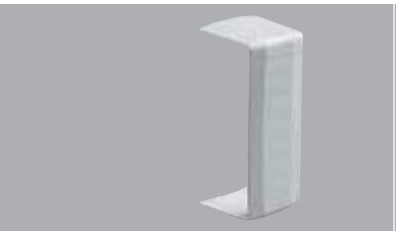

Cable Retainer

MOULDED

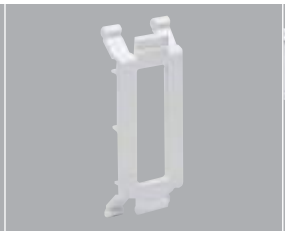

Cable Divider

3 METRE LENGTHS

End Cap

UNIVERSAL FOR USE AT EITHER END
MOULDED

NJC5050WHI	10	NBP50WHI	10	NVS50WHI	36m	NEP5050WHI	5
NJC7550WHI	10	NBP75WHI	10	NVS50WHI	36m	NEP7550WHI	5
NJC7575WHI	10	NBP75WHI	10	NVS75WHI	36m	NEP7575WHI	5
NJC1040WHI	5	NBP100WHI	10	NVS40WHI	36m	NEP1040WHI	5
NJC1050WHI	5	NBP100WHI	10	NVS50WHI	36m	NEP1050WHI	5
NJC1010WHI	5	NBP100WHI	10	NVS100WHI	36m	NEP1010WHI	5

Flat Angle

MOULDED

WITH DATA CORNER
MOULDED

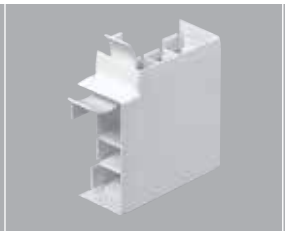

Flat Tee

MOULDED

WITH DATA CORNER
MOULDED

Double Set

FABRICATED

NAF5050WHI	2			NTF5050WHI	2		NMD5050WHI 2
NAF7550WHI	2			NTF7550WHI	2		
NAF7575WHI	2			NTF7575WHI	2		
NAF1040WHI	2			NTF1040WHI	2		
NAF1050WHI	2	NDAF1050WHI	2	NTF1050WHI	2	NDTF1050WHI	2
NAF1010WHI*	1			NTF1010WHI*	1		

* Fabricated

Data corner provides 32mm (1¼" or 1.25") radius compatible with Cat 5e and 6 data cables

* Fabricated

Data corner provides 32mm (1¼" or 1.25") radius compatible with Cat 5e and 6 data cables

Premier

Flat Cross

MOULDED

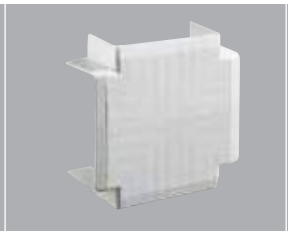

Flange Coupler

Wall Plates

FOR INTERNAL CORNERS
MOULDED

50 X 50MM	**NCU5050WHI**	1	**NFC5050WHI**	1	**NWP5050WHI**	5
75 X 50MM	**NCU7550WHI**	1	**NFC7550WHI**	1	**NWP7550WHI**	5
75 X 75MM	**NCU7575WHI**	1	**NFC7575WHI**	1	**NWP7575WHI**	5
100 X 40MM	**NCU1040WHI**	1	**NFC1040WHI**	1	**NWP1040WHI**	5
100 X 50MM	**NCU1050WHI**	1	**NFC1050WHI**	1	**NWP1050WHI**	5
100 X 100MM	**NCU1010WHI**	1	**NFC1010WHI**	1		

Mounting Frames

VTS6000WHI 10
1 GANG
ACCESSORY MOUNTING FRAME

VTS7000WHI 5
2 GANG
ACCESSORY MOUNTING FRAME

Accessory Spacer

NSP100WHI 10
ACCESSORY SPACER
FOR 100MM WIDE
TRUNKING

MCB/RCD Housings

VTSKMH1WHI 1

VTS/KMH includes cover.
Accessory not provided

Accessory Boxes

ONE GANG
25 & 35MM DEEP FOR
100MM WIDE TRUNKING

VTS6025WHI 25
VTS6035WHI 25

35mm deep boxes are only
for use in 100 x 50mm
and 100 x 100mm trunking

TWO GANG
25 & 35MM DEEP FOR
100MM WIDE TRUNKING

VTS7025WHI 10
VTS7035WHI 10

35mm deep boxes are only
for use in 100 x 50mm
and 100 x 100mm trunking

THREE GANG
28MM & 35MM DEEP FOR
100MM WIDE TRUNKING

VTS8028WHI 5
VTS8035 5
K3716 100
BOX EARTH TERMINAL

Norwich

Norwich Trunking is a very popular system for use in schools, offices and commercial installations, because of its durability and the facility to retrofit extra sockets and outlets as required.

Standard Length: 3 metres
Material: PVCu
Colour: White

- 2 sizes with one or two compartments
- Easy to add sockets and outlets once installed
- Secure lid fit enables wall or ceiling mounting
- Unobtrusive and neat
- Easy to assemble and install
- Durable and impact resistant to Heavy Classification BS 4678 Part 4
- All extrusions manufactured from 100% recycled material*

Profile Lengths

Single Compartment Trunking

3 METRE LENGTHS

NBT3WHI 12m
100 X 25MM
SINGLE COMPARTMENT

3 METRE LENGTHS

NBT4WHI 12m
100 X 40MM
SINGLE COMPARTMENT

Two Compartment Trunking

3 METRE LENGTHS

NBT3TCWHI 12m
100 X 25MM
TWO COMPARTMENT

3 METRE LENGTHS

NBT4TCWHI 12m
100 X 40MM
TWO COMPARTMENT

HOW TO SPECIFY

A one or two compartment trunking system manufactured from recycled PVCu and designed to compliment MK Logic Plus accessories. Durable and impact resistant to Heavy Classification BS 4678 Part 4. Clip on covers and accessories aid easy assembly and installation whilst a wide range of accessories provide maximum versatility of installation.

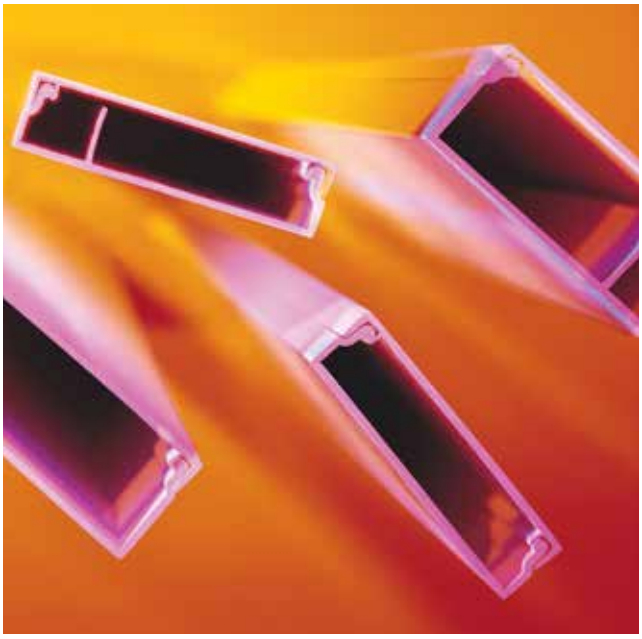

Fittings

Flat Tees

3 METRE LENGTHS

End Caps

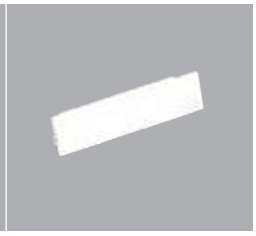

1 COM 100 X 25MM	NTF3WHI	1	NEP3WHI	10
1 COM 100 X 40MM	NTF4WHI	1	NEP4WHI	10
2 COM 100 X 25MM	NTF3TCWHI	1	NEP3WHI	10
2 COM 100 X 40MM	NTF4TCWHI	1	NEP4WHI	10

* Based on 2014 consumption.

Norwich

Fittings

	Flat Angle	Flat Angle SMALL COMPARTMENT TO OUTSIDE	Flat Angle SMALL COMPARTMENT TO INSIDE	Internal Corner	External Corner
1 COM 100 X 25MM	NAF3WHI 1			NAI3WHI 1	NAE3WHI 1
1 COM 100 X 40MM	NAF4WHI 1			NAI4WHI 1	NAE4WHI 1
2 COM 100 X 25MM		NAF3TCWHI 1	NAF3TCSIWHI 1	NAI3TCWHI 1	NAE3TCWHI 1
2 COM 100 X 40MM		NAF4TCWHI 1	NAF4TCSIWHI 1	NAI4TCWHI 1	NAE4TCWHI 1

	Internal Couplings	Accessory Mounting Frames 1 GANG	Accessory Mounting Frames 2 GANG	Accessory Mounting Frame with backbox 1 GANG	Spare Trunking Lid 3 METRE LENGTHS
		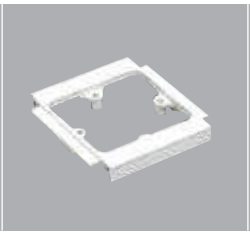		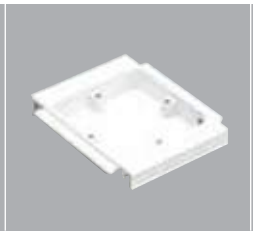	
1 COM 100 X 25MM	NCI3WHI 10	NSO1WHI 10	NSO2WHI 5	NSO1TWHI 5	NBT100LIDWHI 12m
1 COM 100 X 40MM	NCI4WHI 10	NSO1WHI 10	NSO2WHI 5	NSO1TWHI 5	NBT100LIDWHI 12m
2 COM 100 X 25MM	NCI3WHI 10	NSO1WHI 10	NSO2WHI 5	NSO1TWHI 5	NBT100LIDWHI 12m
2 COM 100 X 40MM	NCI4WHI 10	NSO1WHI 10	NSO2WHI 5	NSO1TWHI 5	NBT100LIDWHI 12m

Egatube® Industrial

Trunking

3 METRE LENGTHS
TO ORDER, USE GRY OR WHI SUFFIX,
E.G. CLT1WHI

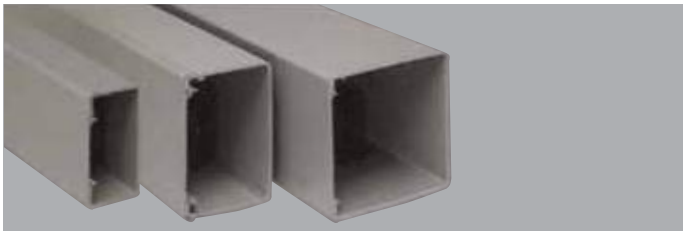

50 X 50MM	CLT1	12m
75 X 50MM	CLT2	12m
75 X 75MM	CLT3	12m
100 X 50MM	CLT4	12m
100 X 75MM	CLT5	6m
100 X 100MM	CLT6	6m
150 X 75MM	CLT7	6m
150 X 100MM	CLT8	3m
150 X 150MM	CLT9	3m

Ega Heavy Duty Industrial Cable Trunking is used extensively for industrial wiring purposes. It is available in a large variety of sizes and has found wide acceptance throughout the world. Its durability, safety and strength are well proven. All trunkings have a clip-on cover which enables fast, efficient installation.

All extrusions manufactured from 100% recycled material.*

Manufactured in accordance with BS 4678 Part 4.

Standard Length: 3 metres
Material: PVCu
Colour: White

When ordering, use colour suffix GRY or WHI, e.g. FTF1WHI

*Based on 2014 consumption.

Flat Tee

MOULDED
GRY OR WHI

FABRICATED
GRY OR WHI

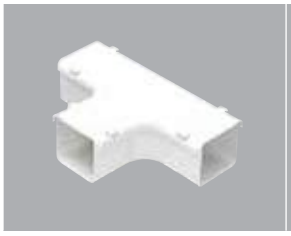

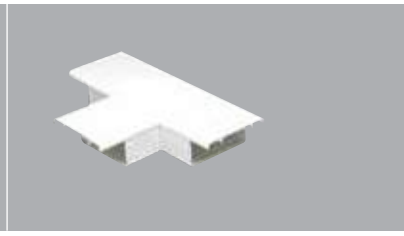

50 X 50MM	FTF1	1		
75 X 50MM	FTF2	1		
75 X 75MM	FTF3	1		
100 X 50MM			FTF4	1
100 X 75MM			FTF5	1
100 X 100MM			FTF6	1
150 X 75MM			FTF7	1
150 X 100MM			FTF8	1
150 X 150MM			FTF9	1

HOW TO SPECIFY

A heavy duty industrial cable trunking system manufactured from recycled PVCu. Durable and impact resistant to Heavy Classification BS 4678 Part 4. Clip on covers and accessories aid easy assembly and installation whilst a wide range of accessories provide maximum versatility of installation.

Egatube® Industrial

Spare Trunking Lid

3 METRE LENGTHS
TO ORDER, USE GRY OR WHI SUFFIX,
E.G. CLT1WHI

Flat Angle

MOULDED
GRY OR WHI

FABRICATED
GRY OR WHI

External Corner

FABRICATED
GRY OR WHI

Internal Corner

FABRICATED
GRY OR WHI

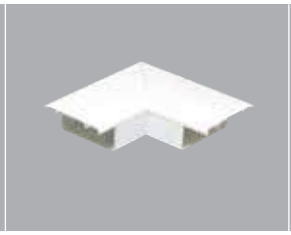

CLT50LID	12m	FAF1	1			FAE1*	1	FAI1*	1
CLT75LID	12m	FAF2	1			FAE2*	1	FAI2*	1
CLT75LID	12m	FAF3	1			FAE3*	1	FAI3*	1
CLT100LID	12m			FAF4	1	FAE4*	1	FAI4*	1
CLT100LID	12m			FAF5	1	FAE5*	1	FAI5*	1
CLT100LID	12m			FAF6	1	FAE6*	1	FAI6*	1
CLT150LID	12m			FAF7	1	FAE7*	1	FAI7*	1
CLT150LID	12m			FAF8	1	FAE8*	1	FAI8*	1
CLT150LID	12m			FAF9	1	FAE9*	1	FAI9*	1

End Cap

MOULDED
GRY OR WHI

Couplings

EXTERNAL
WITH RIVETS
MOULDED
GRY OR WHI

INTERNAL PLAIN
GRY OR WHI

Accessories

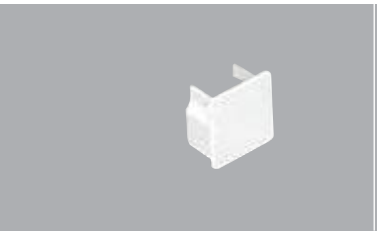

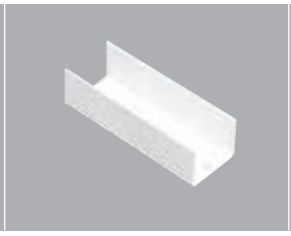
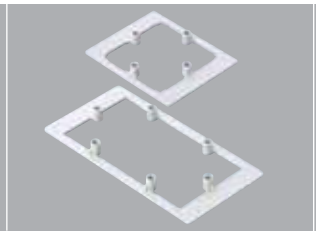

TEP1	10			TCI1	10
TEP2	10			TCI2	10
TEP3	5			TCI3	5
TEP4	5			TCI4	5
TEP5 (WHI ONLY)	5			TCI5	5
TEP6	5	TCE6	5	TCI6	5
TEP7*	1	TCE7*	1		
TEP8*	1	TCE8*	1		
TEP9*	1	TCE9*	1		

EGF5WHI 10
1 GANG
ACCESSORY FRAME

TPR1GRY 200
PUSH IN RIVETS
GREY PLASTIC
HOLE SIZE 7.2MM

TPR1WHI 200
PUSH IN RIVETS
WHITE PLASTIC
HOLE SIZE 7.2MM

* Fabricated

* Fabricated Couplings must be purchased separately for fabricated fittings. Moulded fittings do not require couplings.

Egatube® Cornice

Ega Cornice is designed for surface mounting at the wall/ ceiling junction as a functional and decorative covering.

It is compatible with Ega Mini Trunking. The smaller, single compartment trunking is ideal for domestic rewires whereas the larger three compartment trunking is best suited to commercial and sheltered housing applications.

- Two trunking profiles
- Wide range of integrated components maximises versatility of application
- Neat and unobtrusive
- Accessories designed to overlap edge of trunking cover, hiding joint line
- Easy to assemble and install
- Durable and impact resistant
- All extrusions manufactured from 100% recycled material*

* Based on 2014 consumption.

HOW TO SPECIFY

A cornice trunking system manufactured from recycled PVCu and available in 40mm x 40mm and 90mm x 90mm. Accessories designed to overlap the edge of trunking covers to hide joint line. Clip on covers and accessories aid easy assembly and installation whilst a wide range of accessories provide maximum versatility of installation.

Trunking 40 x 40mm

SINGLE COMPARTMENT
3 METRE LENGTHS

Trunking 90 x 90mm

THREE COMPARTMENT
3 METRE LENGTHS

40 X 40MM	CT1WHI	30m		
90 X 90MM			CT2WHI	12m

Mini Trunking Adaptors

FOR USE WITH YEA ADAPTOR CA2 SUPPLIED WITH ONE BLANKING PLATE

Intersection CT2 to YT2 Mini Trunking

LEFT HAND

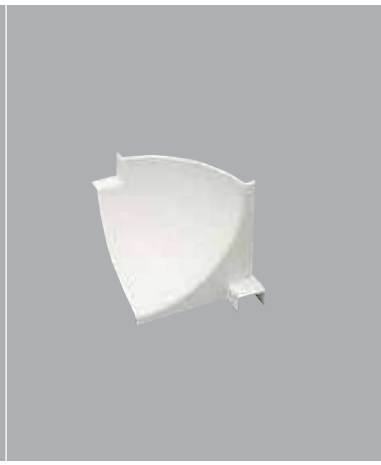

40 X 40MM	CA1WHI	10		
90 X 90MM	CA2WHI	10	CAL22WHI	1

Egatube® Cornice

End Caps

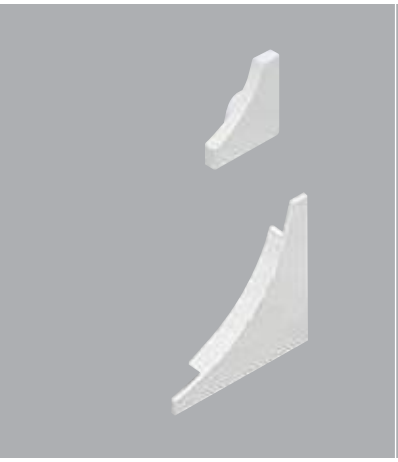

CEP1WHI	10
CEP2WHI	10

Internal Corners

CIP1WHI	10
CIP2WHI	10

External Corners

CXP1WHI	10
CXP2WHI	10

Cable Retaining Straps

CST1WHI	25
CST2WHI	10

Joint Covers

CJC1WHI	10
CJC2WHI	10

Intersection CT2 to YT3 Mini Trunking

RIGHT HAND

CAR22WHI	1

LEFT HAND

CAL23WHI	1

RIGHT HAND

CAR23WHI	1

Intersection

CI1WHI	10

EGATUBE® CONDUIT

RANGE INTRODUCTION

Egatube high impact PVCu conduit offers a cost effective solution for both new building and refurbishment contracts.

The wide range of fittings and ancillary products means that almost any installation can be specified with confidence.

- Wide range of sections and sizes
- Oval, round and corrugated sections are compatible
- Simple and fast installation
- Very wide range of components maximises versatility of application
- Very durable and impact resistant
- 2 grades of round conduit to suit various site conditions
- All extrusions manufactured from 100% recycled material*

*Based on 2014 consumption

HOW TO SPECIFY

A range of conduit manufactured from recycled PVCu and available in 16mm to 50mm sizes and available in oval, round and corrugated configurations.
All products designed and manufactured to comply to BSEN 61386.
A wide range of accessories provide maximum versatility of installation.

Normal Bends

HEAVY GAUGE
FITTED WITH TWO COUPLINGS
BLK OR WHI

Where there is a choice of colour state the appropriate suffix with the list number when ordering e.g. HIP2BLK
For 16mm sizes use 20mm fittings with reducers. (Ref. ER1).

16mm		
20mm	**ENB2**	**25**
25mm	**ENB3**	**10**
32mm		
38mm		
50mm		

Egatube® Conduit

Egatube Round Conduit

Manufactured in accordance with:
BS EN 61386-1
BS EN 61386-21

Standard length:
3 metres

Material:
PVCu

High Impact Conduit Heavy Gauge
3 METRE LENGTHS
BLK OR WHI

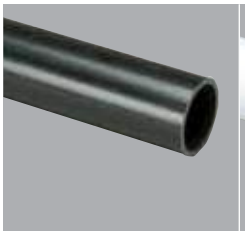

High Impact Conduit Light Gauge
3 METRE LENGTHS
WHI ONLY

Heavy Gauge Coupling
BLK OR WHI

Expansion Coupling
BLK OR WHI

16mm	HIP1	90m	HLG1WHI	90m	ESC1	50	EEC1BLK ONLY	25
20mm	HIP2	90m	HLG2WHI	90m	ESC2	100	EEC2	100
25mm	HIP3	90m	HLG3WHI	90m	ESC3	50	EEC3	50
32mm	HIP4	30m	HLG4WHI	30m	ESC4	50	EEC4	10
38mm	HIP5BLK	30m	HLG5WHI	30m	ESC5	25	EEC5	10
50mm	HIP6BLK	30m	HLG6WHI	30m	ESC6	20	EEC6	10

WALL THICKNESS: (nominal mm):	
HIP1	1.7
HIP2	1.8
HIP3	1.9
HIP4	2.5
HIP5	2.5
HIP6	3.2

WALL THICKNESS: (nominal mm):	
HLG1	1.1
HLG2	1.2
HLG3	1.5
HLG4	1.5
HLG5	1.5
HLG6	1.8

LIGHT GAUGE COUPLINGS NOT REQUIRED
WHI ONLY

Spacer Bar Saddle
BLK OR WHI

Spring Clip Saddle
BLK OR WHI

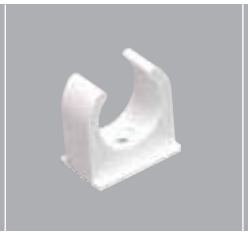

Strap Saddle
BLK OR WHI

Quickfit Spacer Saddle
BLK OR WHI

Conduit Clip
BLK OR WHI

LNB1WHI	25	ESB1	50								
LNB2WHI	100	ESB2	100	MEC2	100	ES2	100	EQS2	100	ECC2	50
LNB3WHI	50	ESB3	100	MEC3	50	ES3	100	EQS3	100	ECC3	50
LNB4WHI	50	ESB4	50	MEC4WHI	25						
LNB5WHI	25	ESB5	25								
LNB6WHI	25	ESB6	25								

Egatube® Conduit

Inspection Elbow

BLK OR WHI

Quick Fit Inspection Elbow

BLK OR WHI

Inspection Tee

BLK OR WHI

Quick Fit Tee

BLK OR WHI

Inspection Bend

BLK OR WHI

20mm	EIE2	25	EQE2	25	EIT2	25	EQT2	25	EIB2	25
25mm					EIT3	25	EQT3	25	EIB3	25
32mm										
38mm										
50mm										

Compression Gland

*BLK OR WHI

Adaptor Male Thread

WITH LOCK RING
BLK OR WHI

Adaptor Female Thread

WITH MALE BUSH
BLK OR WHI

Clip-in Adaptor

WHI ONLY

Bell Mouth Bush

WHI ONLY

20mm	ECG2* 7–10.5	100	EMA2	100	EFA2	100	CEA2WHI	50	BMB2WHI	50
25mm	ECG3BLK 8–13	50	EMA3	50	EFA3	50				
32mm			EMA4	25	EFA4	25				
38mm			EMA5	25	EFA5	25				
50mm			EMA6	10	EFA6	10				

Egatube® Conduit

Quick Fit Inspection Bend

BLK OR WHI

Plug Plain

BLK OR WHI

Plug Screwed

BLK OR WHI

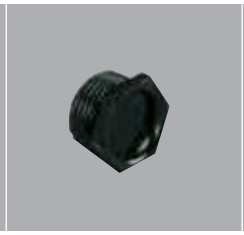

Locknut

GRY ONLY

Lockring

BLK OR WHI

Reducer

BLK OR WHI

EQB2	25	EP2	100	EP2S	100	EHL2GRY	100	ECL2	100	ER1 20 x 16	50
EQB3	25	EP3	100	EP3S	100	EHL3GRY	100	ECL3	100	ER2 25 x 20	50
								ECL4	50		
								ECL5	25	ER5WH 38 x 32	10
								ECL6	25		

Male Bush Plain

BLK OR WHI

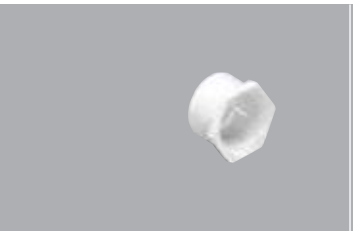

Male Bush Screwed

BLK ONLY

Female Bush Screwed

BLK ONLY

Bending Springs

GREEN
HEAVY GAUGE
FOR HIP AND ESP

RED
LIGHT GAUGE
FOR HLG

MPB2	100	SMB2BLK	50	EBF2BLK	100	ESS2	1	ELS2	1
MPB3	100	SMB3BLK	50	EBF3BLK	100	ESS3	1	ELS3	1
		SMB4BLK	50						
		SMB5BLK	25						
		SMB6BLK	25						

Egatube® Boxes

Circular Boxes

BLK OR WHI

2ECR1

ECR12EL

Terminal Boxes

BLK OR WHI

2ECR2

2ECR7

Through Boxes

BLK OR WHI

2ECR3

2ECR8

Branch Boxes

BLK OR WHI

2ECR17

2ECR18

2ECR13 20
20mm LOOP-IN

2ECR1 20

2ECR1ELWHI* 20
20mm BACK OUTLET

ECR12 10

ECR12EL* 10
NO SPOUT

* Fixed external lugs.
20mm Loop-in boxes have 4 x 20mm knockouts on underside.

2ECR2 20
20mm ONE WAY

3ECR2 10
25mm ONE WAY

2ECR7 20
20mm ONE WAY AND BACK OUTLET

2ECR3 20
20mm TWO WAY

3ECR3 10
25mm TWO WAY

2ECR8 20
20mm TWO WAY AND BACK OUTLET

2ECR17 20
20mm 'U' TWO WAY

2ECR18 20
20mm 'Y' THREE WAY

MATERIAL:
PVCu
LID FIXING CENTRES:
50.8mm
PILLAR THREAD SIZE:
M4 (Brass inserts)
All boxes contain a moulded recess for earth terminal.

ALL CIRCULAR BOXES
For 16mm sizes use 20mm fittings with reducers. (Ref. ER/1)
Some circular boxes are available with extended lugs for the support of heavy loads.

LOAD SUSPENSION
Standard Circular Box: 3kg. @ 60°C max.
Extended Lug Box: 10kg. @ 60°C max.
For enclosed lighting fittings see 'Heat Resistant Box' on page 356 or use 'Steel Insert Clips' on page 357.

Egatube® Boxes

Angle Boxes

BLK OR WHI

2ECR4

2ECR4 20
20mm TWO WAY
3ECR4 10
25mm TWO WAY

Tee Boxes

BLK OR WHI

3ECR5

2ECR5 20
2ECR5EL* 20
20mm THREE WAY
3ECR5 10
25mm THREE WAY

* Swivel lug.

Intersection Boxes

BLK OR WHI

3ECR6

2ECR6 20
2ECR6EL* 20
20mm FOUR WAY
3ECR6 10
25mm FOUR WAY

* Swivel lug.

Tangent Boxes

BLK OR WHI

3ECR14

3ECR15

2ECR14 20
20mm ANGLE
3ECR14 10
25mm ANGLE
2ECR15 20
20mm TEE
3ECR15 10
25mm TEE

MATERIAL:
PVCu
LID FIXING CENTRES:
50.8mm
PILLAR THREAD SIZE:
M4 (Brass inserts)
All boxes contain a moulded recess for earth terminal.

ALL CIRCULAR BOXES
For 16mm sizes use 20mm fittings with reducers. (Ref. ER/1)
Some circular boxes are available with extended lugs for the support of heavy loads.

LOAD SUSPENSION
Standard Circular Box: 3kg. @ 60ºC max.
Extended Lug Box: 10kg. @ 60ºC max.
For enclosed lighting fittings see 'Heat Resistant Box' on page 356 or use 'Steel Insert Clips' on page 357.

Egatube® Accessories

Adaptable Boxes

BLK OR WHI

MAB1

MAB2

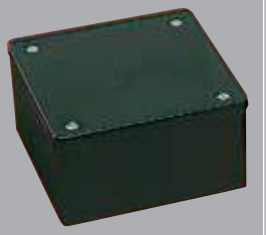

MAB3

BLK OR WHI

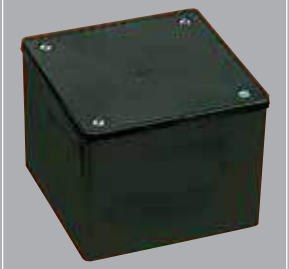

MAB4

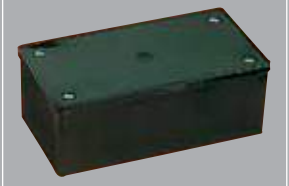

MAB5

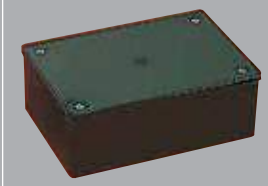

MAB6

Heat-Resistant Boxes

BLK ONLY

2ECR25

Earth Electrode Box

BLK ONLY

EEB1

Circular Lids Gaskets and Screws

BLK OR WHI

EL1

EL2

EL3

MAB1 5
EXTERNAL SIZE
75 x 75 x 41mm

MAB2 5
EXTERNAL SIZE
75 x 75 x 53mm

MAB3 5
INTERNAL SIZE
100 x 100 x 50mm

MAB4 5
INTERNAL SIZE
100 x 100 x 75mm

Available in Black or White.
When ordering use colour suffix BLK or WHI.
MATERIAL:
PVCu
NOTE:
Boxes are not IP Rated.

MAB5 5
INTERNAL SIZE
150 x 75 x 50mm

MAB6 5
INTERNAL SIZE
150 x 100 x 50mm

MAB7 2
INTERNAL SIZE
150 x 150 x 75mm

2ECR25BLK 10
20MM FLAT BASED WITH 20MM CUT-OUTS FOR CONDUIT ENTRY

Available in Black only.
MATERIAL:
Noryl/PVCu
LID FIXING CENTRES:
50.8mm
PILLAR THREAD SIZE:
M4 (metal inserts)
LOAD SUSPENSION:
10kg. @ 100°C max.
All Heat Resistant Boxes include keying facility.

EEB1BLK 5
75 x 75 x 70mm

Available in Black only.
MATERIAL:
PVCu
The Egatube Earth Electrode Box is to protect the connection to an earth electrode.

EL1 100
LIDS 66mm DIA

EL2 50
OVERLAPPING LIDS
85mm DIA

EL3 50
RUBBER GASKETS
66mm DIA

M4X10SS 100
SCREWS FOR CIRCULAR BOXES

EL1/EL2
Available in Black or White.
When ordering use colour suffix BLK or WHI.
EL3
Is available in Black only.
MATERIAL:
EL/1 and EL/2: PVCu
EL/3: Rubber
LID FIXING CENTRES:
50.8mm

Egatube® Accessories

Extension Rings

BLK OR WHI

EER3

EER6

EER7

EER3 25
NOM DEPTH 12.5mm

EER5 25
NOM DEPTH 19mm

EER6 25
NOM DEPTH 25mm

EER7 25
NOM DEPTH 32mm

EER8 25
NOM DEPTH 38mm

EER9 25
NOM DEPTH 50mm

Available in Black or White.
When ordering use colour suffix BLK or WHI.

MATERIAL:
PVCu

FIXING CENTRES:
50.8mm

To suit circular conduit boxes.

EER6-EER9 are fitted with slots to suit Steel Insert Clips.

Pendant Dome Cover

BLK OR WHI

EDC1

EDC1 25
PENDANT DOME COVER

Available in Black or White.
When ordering use colour suffix BLK or WHI.

FIXING CENTRES:
50.8mm

To suit circular conduit boxes. 20mm conduit female thread only.

Accessories

SIC

BET1

BET2

SIC 100
STEEL INSERT CLIP

BET1 50
BRASS EARTHING TERMINALS
5 AMP

BET2 50
BRASS EARTHING TERMINALS
15 AMP

STEEL INSERT CLIP
Fits most Egatube circular boxes through base knock-outs. Provides additional support for heavy pendants.
Tapped M4

NOTE:
Must be fitted before installation of box.

BRASS EARTHING TERMINALS
Fits standard circular boxes and switch/socket boxes.
Supplied complete with screws.

Sundries

EWPLUS

ECT1

DRA10

EWPLUS 1
EGAWELD PLUS
0.25 LITRE

EGAWELD PLUS
A specially prepared waterproof vinyl solvent cement for making watertight joints between PVC conduit, trunking and fittings.
COSSH information is available on the MK website: **www.mkelectric.co.uk**

ECT1 1
EGASNIP CUTTING TOOL

DRA10 1
NYLON DRAW TAPE
10M LENGTH

DRA20 1
NYLON DRAW TAPE
20M LENGTH

EGASNIP
A cutting tool which enables conduit, up to 32mm in diameter, and mini trunking, up to 40mm x 25mm, to be cut easily and precisely giving a clean finish with no swarf.
Single handed operation.
Two types of anvil.
Accurate mitre capability.

NYLON DRAW TAPES
An eyelet is fitted.

Egatube® Accessory Boxes

Round Corner Accessory Boxes

16mm PLASTER DEPTH FLUSH

ESU61WHI

25mm FLUSH

ESU9MLWHI

ESU92MLWHI

35mm FLUSH

ESU8MLWHI

ESU82MLWHI

25mm SURFACE

ESU241WHI

ESU242WHI

Square Corner Accessory Boxes

25mm SURFACE

ESU261WHI

ESU262WHI

32mm SURFACE

ESU281WHI

ESU282WHI

ESU61WHI 25
1 GANG
ONE FIXED PILLAR AND ONE ADJUSTABLE LUG

KNOCKOUTS:
One 16mm oval and one 20mm oval
MATERIAL:
PVCu
DIMENSIONS:
1 gang: 73 x 73mm
FIXING CENTRES:
1 gang: 60.3mm
BS 4662 and BS 5733 where applicable.

ESU9MLWHI 25
1 GANG
ADJUSTABLE LUGS
ESU92MLWHI 10
2 GANG
ADJUSTABLE LUGS

KNOCKOUTS:
1 gang: Six 20mm round
2 gang: Seven 20mm round and one 25mm oval
MATERIAL:
PVCu
DIMENSIONS:
1 gang: 73 x 73mm
2 gang: 73 x 134mm
FIXING CENTRES:
1 gang: 60.3mm
2 gang: 120.6mm
BS 4662 and BS 5733 where applicable.

ESU81WHI 25
1 GANG
FIXED LUGS
ESU8MLWHI 25
1 GANG
ADJUSTABLE LUGS
ESU82MLWHI 10
2 GANG
ADJUSTABLE LUGS

KNOCKOUTS:
1 gang: Eight 20mm round
2 gang: Nine 20mm round and one 25mm oval
MATERIAL:
PVCu
DIMENSIONS:
1 gang: 73 x 73mm
2 gang: 73 x 134mm
FIXING CENTRES:
1 gang: 60.3mm
2 gang: 120.6mm
BS 4662 and BS 5733 where applicable.

ESU241WHI 25
1 GANG
ESU242WHI 10
2 GANG

KNOCKOUTS:
1 gang:
One 20mm round and one mini trunking entry
2 gang:
One 20mm round and three mini trunking entries
MATERIAL:
PVCu
DIMENSIONS:
1 gang: 86 x 86mm
2 gang: 86 x 146mm
FIXING CENTRES:
1 gang: 60.3mm
2 gang: 120.6mm
BS 4662 and BS 5733 where applicable.

ESU261WHI 25
1 GANG
ESU262WHI 10
2 GANG

KNOCKOUTS:
ESU261: One 20mm round
ESU262: One 20mm round
MATERIAL:
PVCu
DIMENSIONS:
1 gang: 86 x 86mm
2 gang: 86 x 146mm
FIXING CENTRES:
1 gang: 60.3mm
2 gang: 120.6mm
BS 4662 and BS 5733 where applicable.

ESU281WHI 25
1 GANG
ESU282WHI 10
2 GANG

KNOCKOUTS:
1 gang: One 20mm round
2 gang: One 20mm round and one mini trunking entry
MATERIAL:
PVCu
DIMENSIONS:
1 gang: 86 x 86mm
2 gang: 86 x 146mm
FIXING CENTRES:
1 gang: 60.3mm
2 gang: 120.6mm
BS 4662 and BS 5733 where applicable.

Egatube® Oval

Oval Conduit

3 METRE LENGTHS

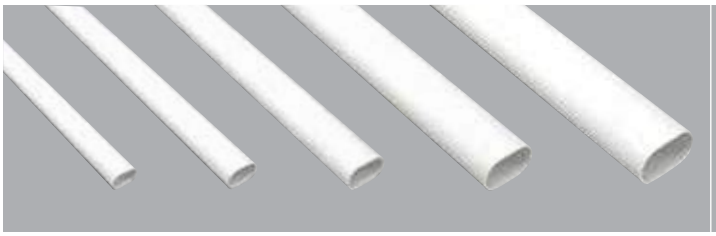

Coupling

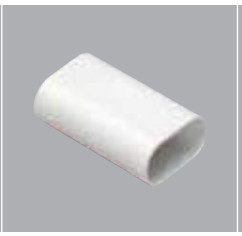

Oval to Round Adaptor

Manufactured in accordance with: BS 4607 Part 5

Standard length: 3 metres

Material: PVCu

Colour: White

All extrusions manufactured from 100% recycled material.*

* Based on 2014 consumption.

13mm x 8mm	EOC1WHI	150m				
16mm x 10mm	EOC2WHI	150m				
22.5mm x 11mm	EOC3WHI	150m	CO3WHI	50	OA3WHI	50
29mm x 11mm	EOC4WHI	150m	CO4WHI	50		
29mm x 16mm	EOC5WHI	150m				
23mm x 14mm	EOC6WHI	150m				

Saddle

External Spring Clip Oval

16mm	OS2WHI	100	XC2WHI	100
20mm	OS3WHI	100	XC3WHI	100
25mm	OS4WHI	100	XC4WHI	100

Egaflex™

Egaflex

Corrugated PVCu Conduit

Adaptor Nylon

The Egaflex PVCu conduit range is a corrugated pliable system which can be used for the connection of vibrating equipment or to provide tight bends for interconnecting conduits. The range can be surface mounted or cast-in concrete and can also be used with standard conduit fittings.

Manufactured in accordance with:
BS EN 61386-1
BS EN 61386-22

Material: PVCu

Colour: White

Standard length: 50 metres coil

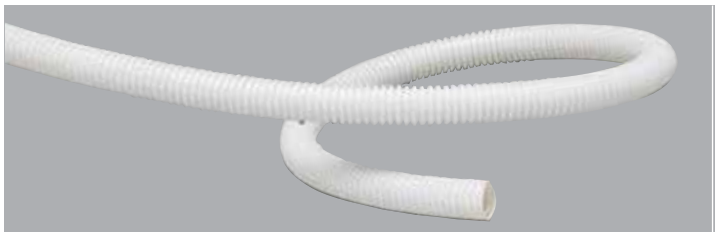

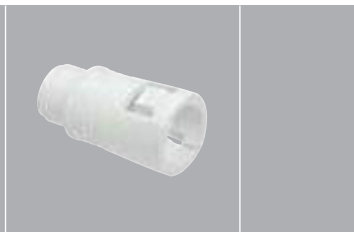

16mm	EF1WHI	50m Coil	FAB1WHI	50
20mm	EF2WHI	50m Coil	FAB2WHI	50
25mm	EF3WHI	50m Coil	FAB3WHI	50

Rectangular Channelling

2 METRE LENGTHS

Wall thickness: 0.9mm

Material: PVCu

Colour: White

Standard length: 2 metres

Other lengths can be supplied against quantity orders.

All extrusions manufactured from 100% recycled material.*

* Based on 2014 consumption.

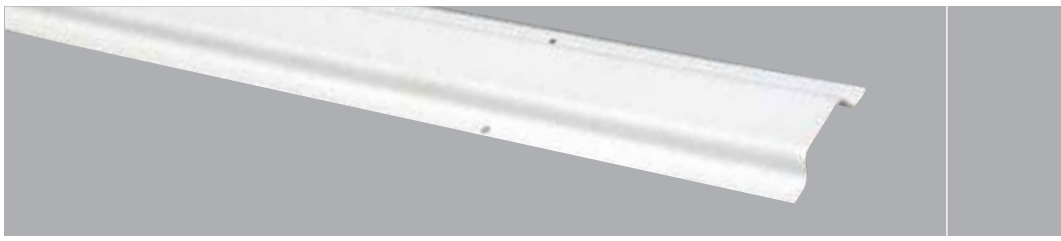

12mm	(8mm DEPTH APPROX)	REC1WHI	150mm
25mm	(8mm DEPTH APPROX)	REC2WHI	150mm
25mm	(9.5mm DEPTH APPROX)	REC3WHI	150mm

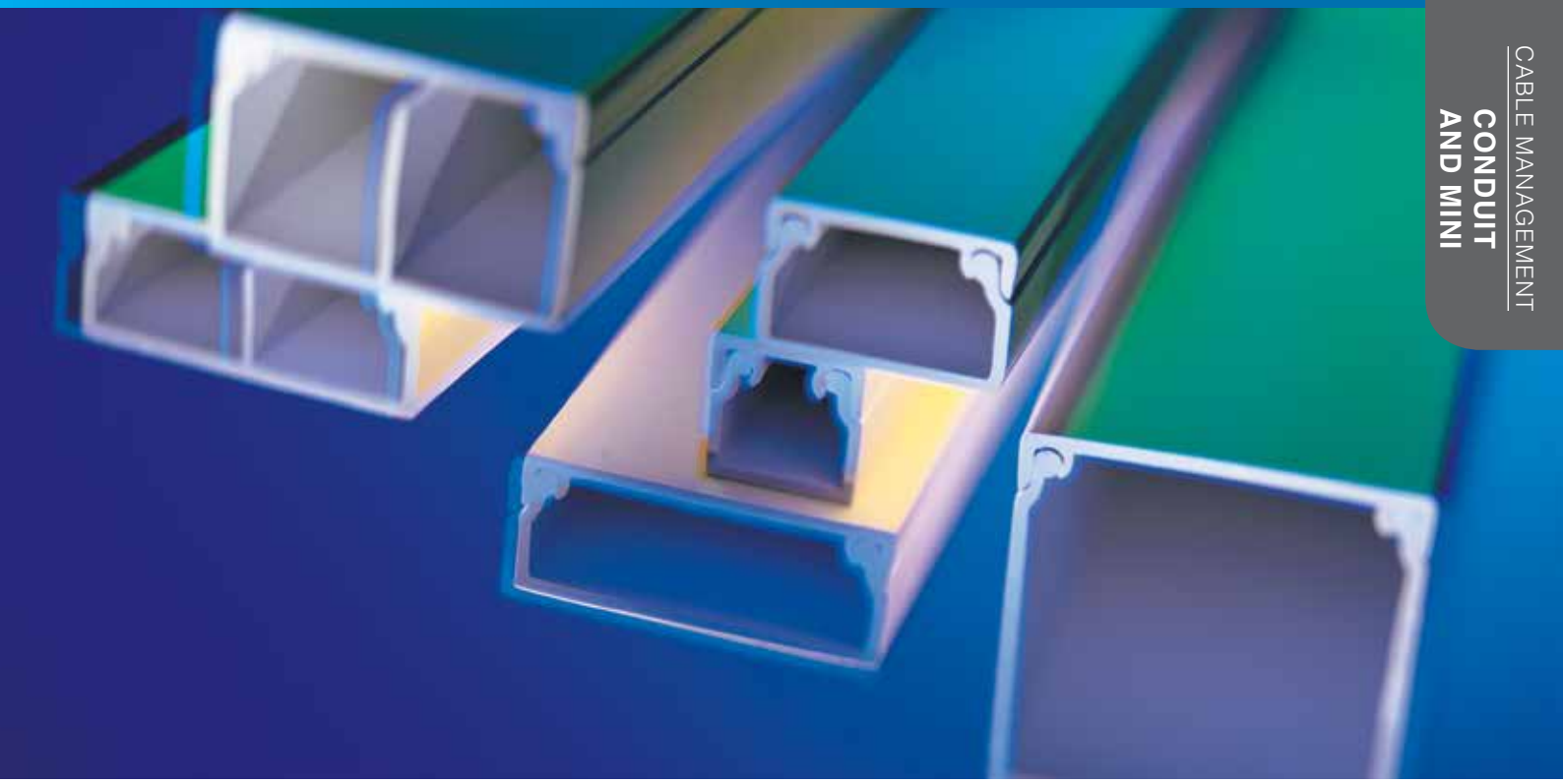

EGA® MINI

RANGE INTRODUCTION

Ega Mini Trunking consists of a range of sizes of extruded PVCu sections for the containment of electrical and data cabling for surface wiring.

The products are ideally suited for refurbishment programmes as well as new installation projects, both in the domestic and commercial sectors.

Speedfix Mini Trunking is complete with an acrylic foam adhesive for fast location of power circuits and secure containment of low voltage wiring.

FEATURES & BENEFITS

WIDE RANGE OF TRUNKING PROFILES

WIDE RANGE OF INTEGRATED COMPONENTS
Maximises versatility of application

EASY TO ASSEMBLE AND INSTALL

DURABLE AND IMPACT RESISTANT

SPEEDFIX OPTIONS
For faster installation

ALL EXTRUSIONS MANUFACTURED FROM 100% RECYCLED MATERIAL*

5 YEAR GUARANTEE

*Based on 2014 consumption

HOW TO SPECIFY

A range of mini conduit manufactured from recycled PVCu and available in 16mm x 16mm to 50mm x 50mm sizes. All products to be designed and manufactured to comply to BS EN 50085 Part 1 whilst a wide range of accessories provide maximum versatility and installation. Additional optional "Speedfix" mini trunking to utilize foam adhesive for fast location and installation for power circuits and low voltage wiring.

Ega Mini®

Manufactured in accordance with BS EN 50085 Part 1.

Standard Length: 3 metres

Available in 2 metre lengths for Non UK Markets.

Material: PVCu

Mini Trunking

3 METRE LENGTHS

2 METRE LENGTHS
(FOR NON UK MARKETS)

Coupling

MOULDED

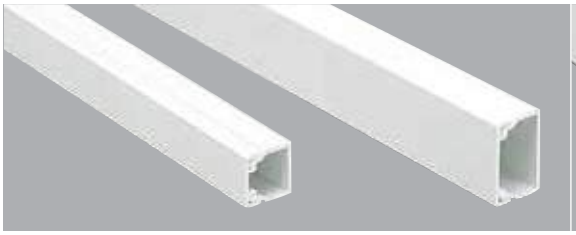

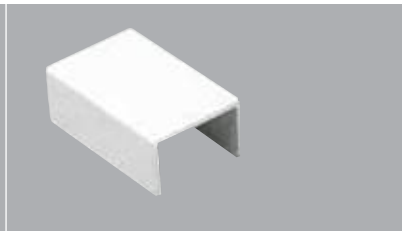

16 x 16mm	YT1WHI	90m			YT1D1WHI	60m	YC1WHI 20
25 x 16mm	YT2WHI	90m	YT2CHA	30m	YT2D1WHI	60m	YC2WHI OR CHA 20
32 x 12.5mm	YT200WHI	30m			YT200D1WHI	32m	YC200WHI 20
40 x 16mm	YT3WHI	45m			YT3D1WHI	32m	YC3WHI 10
40 x 25mm	YT4WHI	45m	YT4CHA	30m	YT4D1WHI	32m	YC4WHI 10
40 x 40mm	YT5WHI	45m			YT5D1WHI	32m	YC5WHI 10
50 x 25mm	YT6WHI	30m			YT6D1WHI	32m	
50 x 32mm	YT7WHI	30m			YT7D1WHI	32m	
50 x 50mm	YT8WHI	12m					YC8WHI 10

Manufactured in accordance with BS EN 50085 Part 1.

Standard Length: 3 metres

Available in 2 metre lengths for Non UK Markets.

Material: PVCu

Self Adhesive Tape should not be relied upon for permanent fixing of the Speedfix range. A permanent means (such as screws) should also be used.

Speedfix Mini Trunking

3 METRE LENGTHS

2 METRE LENGTHS

Twin Compartment Trunking

3 METRE LENGTHS

2 METRE LENGTHS

16 x 16mm	SPF1WHI	60m	SPF1D1WHI	60m				
25 x 16mm	SPF2WHI	30m	SPF2D1WHI	60m				
32 x 12.5mm								
40 x 16mm	SPF3WHI	30m	SPF3D1WHI	32m	ZT3WHI	30m		
40 x 25mm	SPF4WHI	30m			ZT4WHI	30m	ZT4D1WHI	32m
40 x 40mm								
50 x 25mm								
50 x 32mm								
50 x 50mm								

Ega Mini®

End Cap

MOULDED

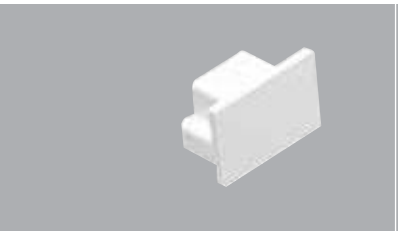

Internal Corner

MOULDED

Internal Data Corner

MOULDED

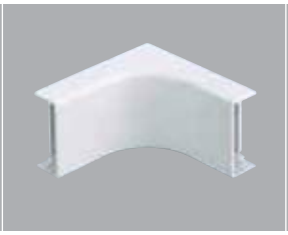

External Corner

MOULDED

External Data Corner

MOULDED

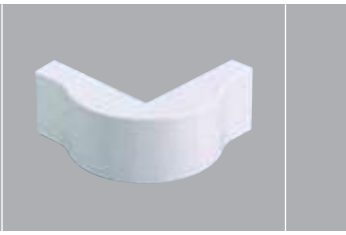

YEP1WHI	20	YAI1WHI	20			YAE1WHI	20	
YEP2WHI OR CHA	20	YA12WHI OR CHA	20			YAE2WHI OR CHA	20	
YEP200WHI	20	YA1200WHI	20			YAE200WHI	20	
YEP3WHI	20	YA13WHI	5	YDA13WHI	10	YAE3WHI	5	YDAE3WHI	5
YEP4WHI OR CHA	20	YA14WHI OR CHA	5			YAE4WHI OR CHA	5	
YEP5WHI	20	YA15WHI	5			YAE5WHI	5	
YEP6WHI	10	YA16WHI	5			YAE6WHI	5	
YEP7WHI	10	YA17WHI*	5			YAE7WHI*	5	
YEP8WHI	10	YA18WHI	5			YAE8WHI	5	

*Fabricated

*Fabricated

Flat Angle

MOULDED

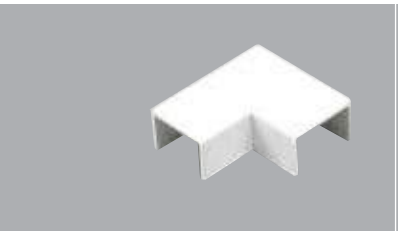

Flat Data Angle

MOULDED

Flat Tee

MOULDED

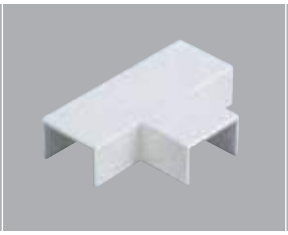

MOULDED

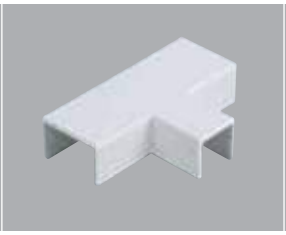

Flat Data Tee

MOULDED

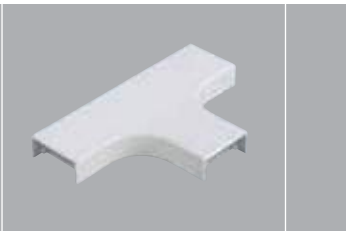

YAF1WHI	20			YTF1WHI	20			
YAF2WHI OR CHA	20			YTF22WHI OR CHA	20	YTF21WHI	20	
YAF200WHI	20			YTF200WHI	20			
YAF3WHI	5	YDAF3WHI	10	YTF3WHI	5			YDTF3WHI	10
YAF4WHI OR CHA	5			YTF4WHI OR CHA	5	YTF42WHI OR CHA	5	
YAF5WHI	5			YTF5WHI	5			
YAF6WHI	5			YTF6WHI	5			
YAF7WHI*	5			YAF6WHI*	5			
YAF8WHI	5			YAF8WHI	5			

Flat Tee vertical aperture sizes:
YTF21WHI 16 x 16mm

Flat Tee vertical aperture sizes:
YTF42WHI 25 x 16mm

*Fabricated

*Fabricated

Ega Mini®

Side Tee

Adaptors

FOR USE WITH MINI TRUNKING BOXES MOULDED

MOULDED

MOULDED

MOULDED

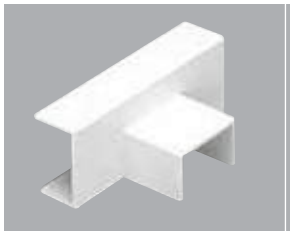

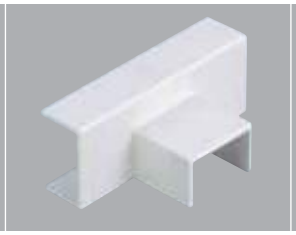

16 x 16mm					YEA1WHI	25	
25 x 16mm	YST21WHI	10	YST22WHI	10	YEA2WHI	25	UEA2WHI	25
40 x 16mm					YEA3WHI	25	UEA3WHI	25

Side Tees (perpendicular)
Aperture Sizes
YST22WHI: 25 x 16mm

UEA Adaptors
For fixing with adhesive. They are particularly useful when spurring off from a larger trunking section.

Circular Boxes

MOULDED

16 x 16mm	YCR1ELWHI	10
25 x 16mm	YCR1ELWHI	10
40 x 16mm	YCR1ELWHI	10

Circular Boxes
Accept standard ceiling roses, pull switches and plug-in lighting fittings.
The base incorporates an earth terminal facility
(order terminal separately, see page 356).
Lid fixing centres: 50.8mm
Pillar thread size: M4 (Metal inserts)
Load Suspension: 5kg @ 60°C max.

Ega Mini®

Round Corner Accessory Boxes

SURFACE

ESU231WHI

ESU2311WHI

ESU2323WHI

ESU3511WHI

ESU3523WHI

Square Corner Accessory Boxes

SURFACE

ESU2211WHI

ESU2512WHI

ESU2523WHI

SURFACE

ESU2713WHI

ESU2721WHI

ESU4423WHI

SIDE MOUNTING
SURFACE

ESU32140WHI

ESU32225WHI

Egaline Wall Box Assemblies

FOR AMERICAN ACCESSORIES

ESUUSB17WHI

ESUUSB19WHI

ESUUSB22WHI

ESUUSB53WHI

ESU231WHI 25
1 GANG 25MM
ONE ENTRY
CENTRE (TOP)

ESU2311WHI 25
1 GANG 25MM
ONE ENTRY (SIDE)

ESU2323WHI 10
2 GANG 25MM
THREE ENTRIES
(TOP & BOTH SIDES)

ESU3511WHI 25
1 GANG 32MM
ONE ENTRY
CENTRE (TOP)

ESU3523WHI 10
2 GANG 32MM
THREE ENTRIES.
(TOP, LEFT & RIGHT SIDE)

ESU2211WHI 25
1 GANG 25MM
ONE ENTRY (SIDE)

ESU2512WHI 25
1 GANG 25MM
TWO ENTRIES
(TOP & BOTTOM)

ESU2223WHI 10
2 GANG 25MM
THREE ENTRIES
(TOP & BOTH SIDES)

ESU2523WHI 10
2 GANG 25MM
THREE ENTRIES
(TOP & BOTTOM)

ESU2713WHI 10
1 GANG 32MM
THREE ENTRIES
(TOP & BOTTOM)

ESU2721WHI 10
2 GANG 32MM
ONE ENTRY
CENTRE (TOP)

ESU4423WHI 5
2 GANG 41MM
THREE ENTRIES
(TOP & BOTH SIDES)

Ega Round and Square Corner boxes are for use in conjunction with mini trunking adaptors, reference:
YEA – straight entry and
YSA – side entry.

Material:
PVCu

Dimensions:
1 gang: 86 x 86mm
2 gang: 86 x 146mm

Fixing Centres:
1 gang: 60.3mm
2 gang: 120.6mm
BS 4662 and BS 5733 where applicable.

ESU32125WHI 10
1 GANG TO FIT 25 X 16MM TRUNKING. TWO ENTRIES

ESU32140WHI 10
1 GANG TO FIT 40 X 16MM TRUNKING. TWO ENTRIES

ESU32225WHI 10
2 GANG TO FIT 25 X 16MM TRUNKING. TWO ENTRIES

ESU32240WHI 10
2 GANG TO FIT 40 X 16MM TRUNKING. TWO ENTRIES

Side mounting boxes do not require adaptors and can be used with 25mm x 16mm and 40 x 16mm mini trunking.

Material:
PVCu

Dimensions:
1 gang: 86* x 86mm
2 gang: 86* x 146mm
* excluding plinth

Fixing Centres:
1 gang: 60.3mm
2 gang: 120.6mm
BS 4662 and BS 5733 where applicable.

ESUUSB17WHI 5
1 GANG
38MM DEPTH
FOUR ENTRIES
(NON UK)

ESUUSB19WHI 5
1 GANG
45MM DEPTH
FOUR ENTRIES
(NON UK)

ESUUSB22WHI 5
1 GANG
51MM DEPTH
FOUR ENTRIES
(NON UK)

ESUUSB53WHI 5
2 GANG
DEEP BOX
FOUR ENTRIES
(NON UK)

Egaline Wall Box assemblies are for use in conjunction with Mini Trunking

Spout adaptors reference:
YEA – straight entry and YSA-side entry.

Material:
PVCu

Dimensions:
1 gang: 124 x 79mm

RED ALERT™

RANGE INTRODUCTION

Based on MK's well proven Ega Mini Trunking System, Red Alert brings all of the benefits in reducing the installation time on call points, computer power supply switches, water heaters, boiler switches, emergency stops, panic alarms, smoke detectors, sounders and warning lights.

Manufactured in PVCu, the Red Alert Mini Trunking System meets the growing specification requirement for alarm circuit identification. In addition it affords extra mechanical protection to cables, dramatically improves the overall appearance of Mineral Insulated surface wiring and further serves, where necessary, to highlight the locations of manual call points.

HOW TO SPECIFY

A range of mini trunking designed specifically for alarm circuit identification. Manufactured from recycled PVCu and available in 16mm x 16mm to 40mm x 16mm sizes. Clip on covers and accessories aid easy assembly and installation, whilst a wide range of accessories provide maximum versatility of installation.

FEATURES & BENEFITS

WIDE RANGE OF TRUNKING PROFILES

WIDE RANGE OF INTEGRATED COMPONENTS
Maximises versatility of application.

EASY TO ASSEMBLE AND INSTALL

DURABLE AND IMPACT RESISTANT

SPEEDFIX OPTIONS ALLOW FAST INSTALLATION

ALL EXTRUSIONS MANUFACTURED FROM 100% RECYCLED MATERIAL*

* Based on 2014 consumption

Red Alert™

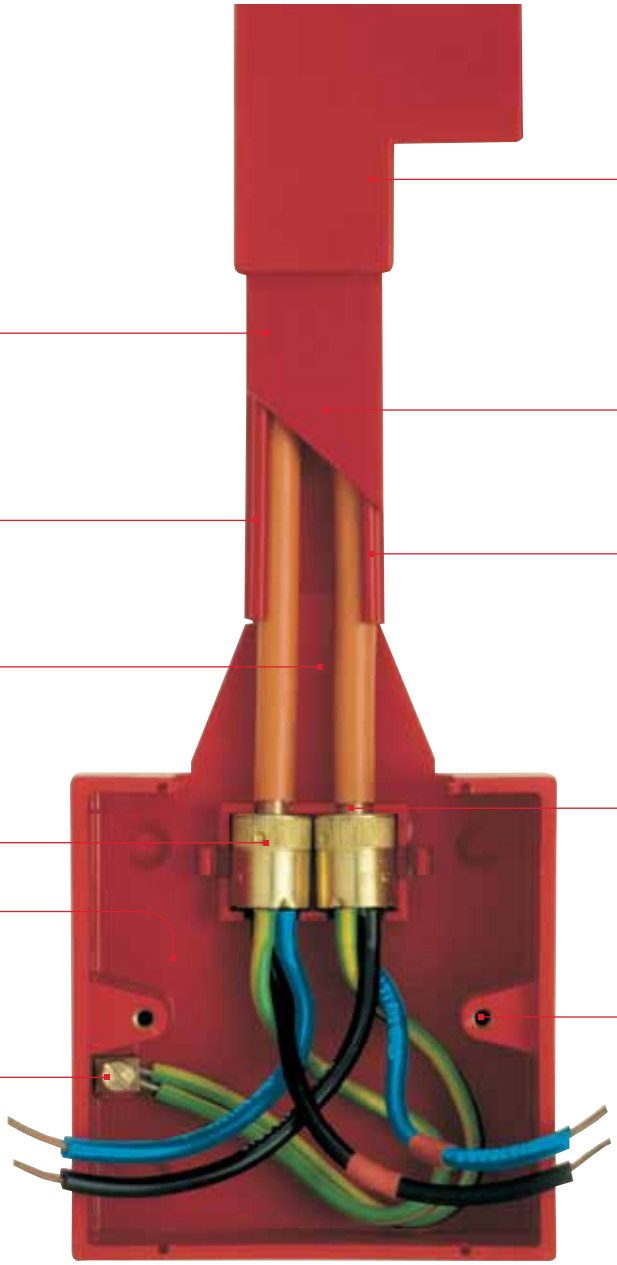
EASILY CUT TO REQUIRED LENGTH
CLIP ON COMPONENTS FOR EASY INSTALLATION
DOUBLE LID CLIP CREATES STRONG RIGID STRUCTURE
NO WALL CHASING
FEWER CABLE CLIPS
MULTIPLE WIRING FACILITY
NO NEED FOR CABLE GLANDS AND SHROUDS
UNIQUE POT CLAMPS
MANUFACTURED FROM NON CONDUCTIVE CORROSIVE RESISTANT MATERIAL
FIXING PILLARS WITH THREADED BRASS INSERTS
ALL BOXES FITTED WITH EARTH TERMINAL

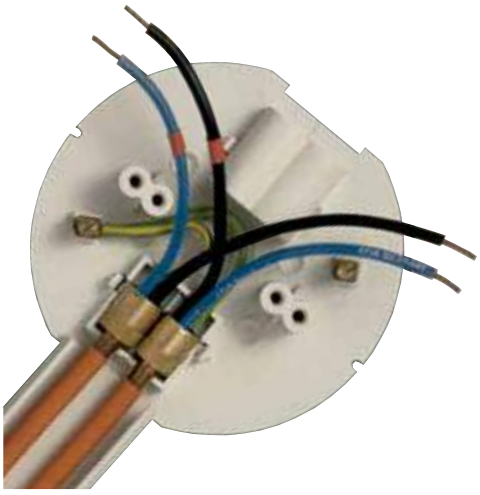

Red Alert™

Red trunking and fittings are only available in the 25 x 16mm profile

3 METRE LENGTHS

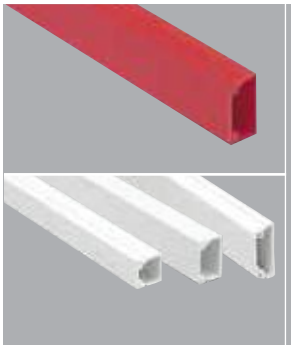

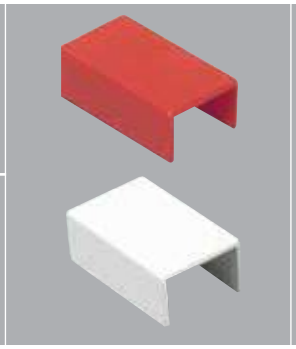

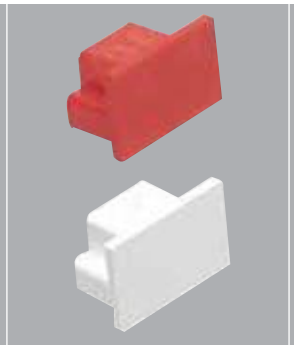

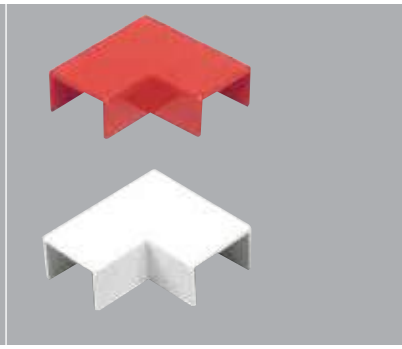

	Trunking		Coupling		End Cap		Flat Angle	
16 x 16mm	YT1WHI	90m	YC1WHI	20	YEP1WHI	20	YAF1WHI	20
25 x 16mm	YT2RED	30m	YC2RED	20	YEP2RED	20	YAF2RED	20
	YT2WHI	90m	YC2WHI	20	YEP2WHI	20	YAF2WHI	20
32 x 12.5mm	YT200WHI	30m	YC200WHI	20	YEP200WHI	20	YAF200WHI	20
40 x 16mm	YT3WHI	45m	YC3WHI	10	YEP3WHI	20	YAF3WHI	5

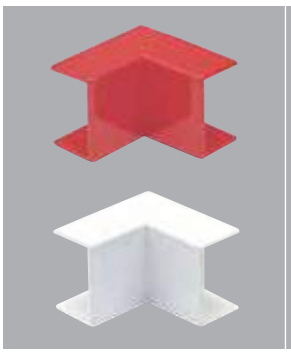

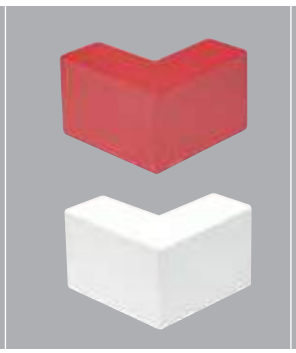

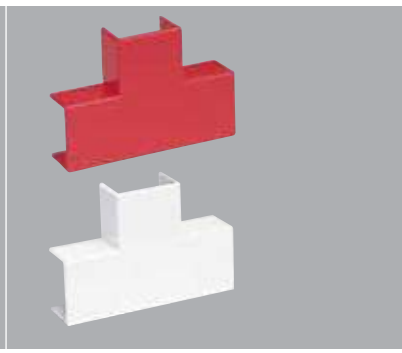

	Internal Corner		External Corner		Side Tee		Flat Tee	
16 x 16mm	YAI1WHI	20	YAE1WHI	20			YTF1WHI	20
25 x 16mm	YAI2RED	20	YAE2RED	20	YST21WHI	10	YTF21WHI	20
	YAI2WHI	20	YAE2WHI	20	YST22RED	10	YTF22RED	20
					YST22WHI	10	YTF22WHI	20
32 x 12.5mm	YAI200WHI	20	YAE200WHI	20			YTF200WHI	20
40 x 16mm	YAI3WHI	5	YAE3WHI	10			YTF3WHI	5

APERTURE SIZES
YST21:
16 x 16mm
YST22:
25 x 16mm

APERTURE SIZES
YTF21WHI:
16 x 16mm
YTF22:
25 x 16mm

Red Alert™

Boxes

MI ACCESSORY BOX (1 ENTRY)		STANDARD ACCESSORY BOX (1 ENTRY)		CIRCULAR ACCESSORY BOX (1/2 ENTRY)	
ESU501RED	5	ESU503RED	5	YCR502RED	5
ESU501WHI	5	ESU503WHI	5	YCR502WHI	5

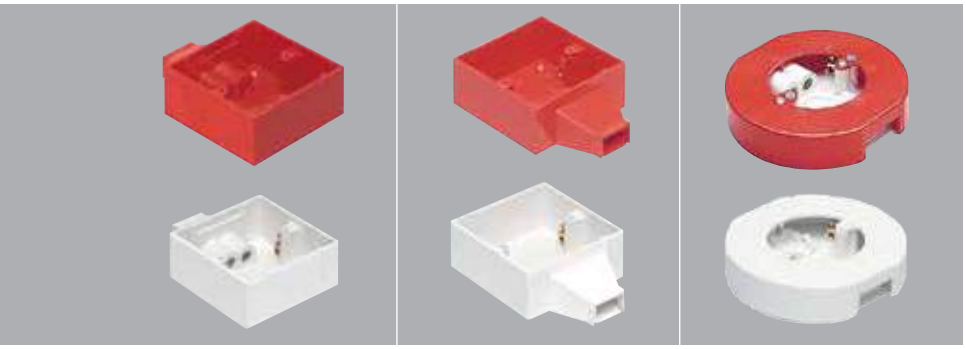

SQUARE ACCESSORY BOXES
Accessory fixing centres: 60.3mm
External dimensions: 86 x 86 x 38mm
Pillar thread size: M3.5

CIRCULAR ACCESSORY BOXES
Accessory fixing centres:
50.8mm and 70.0mm
External dimensions:
134mm diameter
Pillar thread size:
M4
Load suspension:
3kg at 60°C max

Adaptors

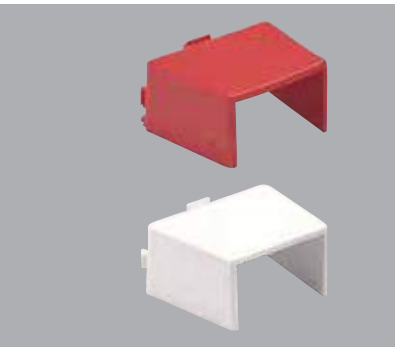

YEA1WHI	25
YEA2RED	25
YEA2WHI	25
YEA200WHI	25
YEA3WHI	25

Ega Communication®

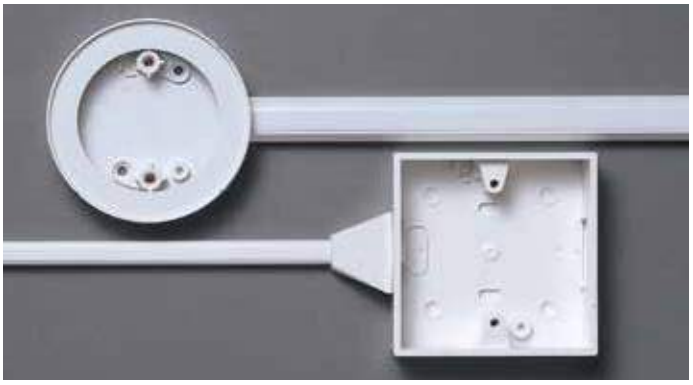

Ega Communication trunking is a series of unobtrusive low profile PVCu trunkings designed to contain the smaller diameter cables used for telecommunication and signal purposes. There are three sizes available and the systems are complete with fittings to enable them to be used in conjunction with the mini trunking boxes.

All extrusions manufactured from 100% recycled material.*

* Based on 2014 consumption.

Communication Trunking

3 METRE LENGTHS

2 METRE LENGTHS (NON UK)

11 x 8mm	CMT1WHI	60m	CMT1D1WHI	60m
16 x 10mm	CMT3WHI	60m		
20 x 12.5mm	CMT4WHI	60m		

Standard Length:
3 metres
2 metre lengths are available for Non UK Markets.
Material:
PVCu
COLOUR:
White

Available in 2 metre lengths for non UK markets.

Speedfix™ Trunking

3 METRE LENGTHS

2 METRE LENGTHS (NON UK)

Spout Adaptor

Circular Box

ONE ENTRY

Circular Box Through

TWO ENTRY

Self adhesive tape should not be relied upon for permanent fixing of the Speedfix range. Additional fixing means (such as screws) should be used.

11 x 8mm	SMT1WHI	60m	SMT1D1WHI	60m	CMA1WHI	25				
16 x 10mm	SMT3WHI	60m	SMT3D1WHI	60m	CMA3WHI	25				
20 x 12.5mm	SMT4WHI	60m	SMT4D1WHI	60m	CMA4WHI	25	YCR1001ELWHI	10	YCR1002ELWHI	10

Available in 2 metre lengths for non UK markets.

Spout adaptors are for use with switch and socket boxes.

Circular boxes accept standard ceiling roses and pull switches. The base incorporates earth terminal facility (order terminal separately, see page 356).
LID FIXING CENTRES:
50.8mm
PILLAR THREAD SIZE:
M4 (Metal inserts)
Load suspension:
5kg @ 60°C max

INTERACT UNDERFLOOR POWER

RANGE INTRODUCTION

Interact Underfloor Power is a low profile powertrack system catering for single and multi-circuit applications, specifically designed to ensure a fast and simple installation.

It is suitable for standard, clean earth, uninterrupted or dedicated power supplies and allows power throughout the building.

HOW TO SPECIFY

A low profile 63A underfloor powertrack system to cater for single and multi-circuit applications. Snap fast crocodile joints to ensure fast and simple installation with provision for 300mm socket spacing's.
Key and colour coded tap-offs and sockets used to prevent cross pole contamination.

FEATURES & BENEFITS

PATENTED 'SNAP FAST' CROCODILE JOINTS
Ensures fast and simple installation

DUAL TAP-OFF FOR TWIN SYSTEM
Offers simple 'single fit' installation

KEY CODED AND COLOUR CODED TAP-OFFS
Provides mechanical protection against cross pole contamination

POWERTRACK WITH INTEGRAL END FEED AVAILABLE

COMPLIES WITH WIRING REGULATIONS
Complies with both the requirements of BS EN 61534 and BS 7671:2014 IET Wiring Regulations (17th Edition)

AVAILABLE IN 63A

5 YEAR GUARANTEE

Interact Under

TRACK INTERLINKS AVAILABLE

- Flexibility to achieve maximum floor coverage

AVAILABLE IN 63A

- Flexible to suit project requirements
- Lower rating opens opportunities for low cost installations

KEY CODED TRACK

- Prevents inadvertent mixing of configurations

A GENUINE TWIN POWERTRACK SYSTEM

- Clean Earth and Standard Earth in one single track
- Single fitting of two circuits for speed of installation

SIMPLIFIED TRACK ORDERING
Track comes complete with:

- Dust Covers
- End Caps
- Fixing Bracket
- Crocodile Joints

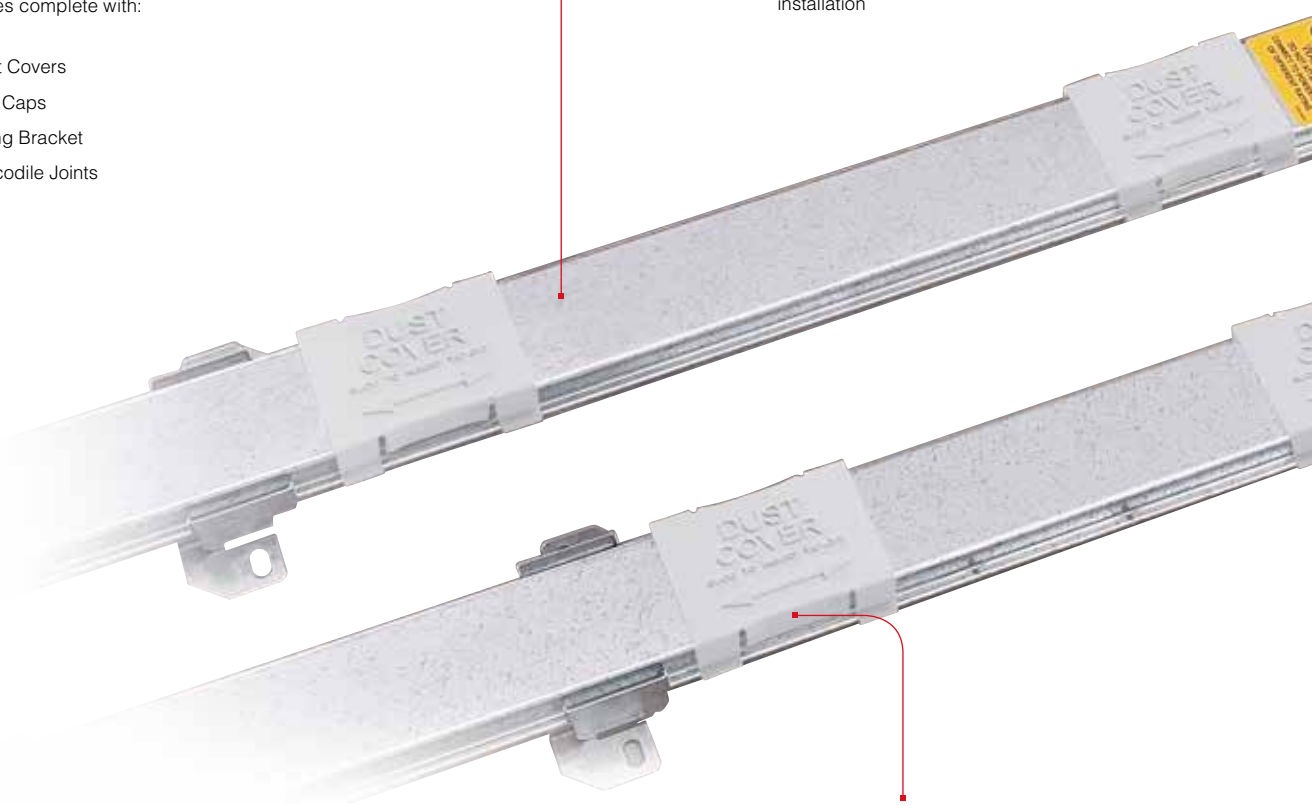

PRE-ATTACHED SLIDING DUST COVERS

- Keeps track clean prior to and during installation

Designed for use with cablelink plus modular, cablelink plus single pan floorboxes , slab boxes, grommets and deskpod

Interact Under

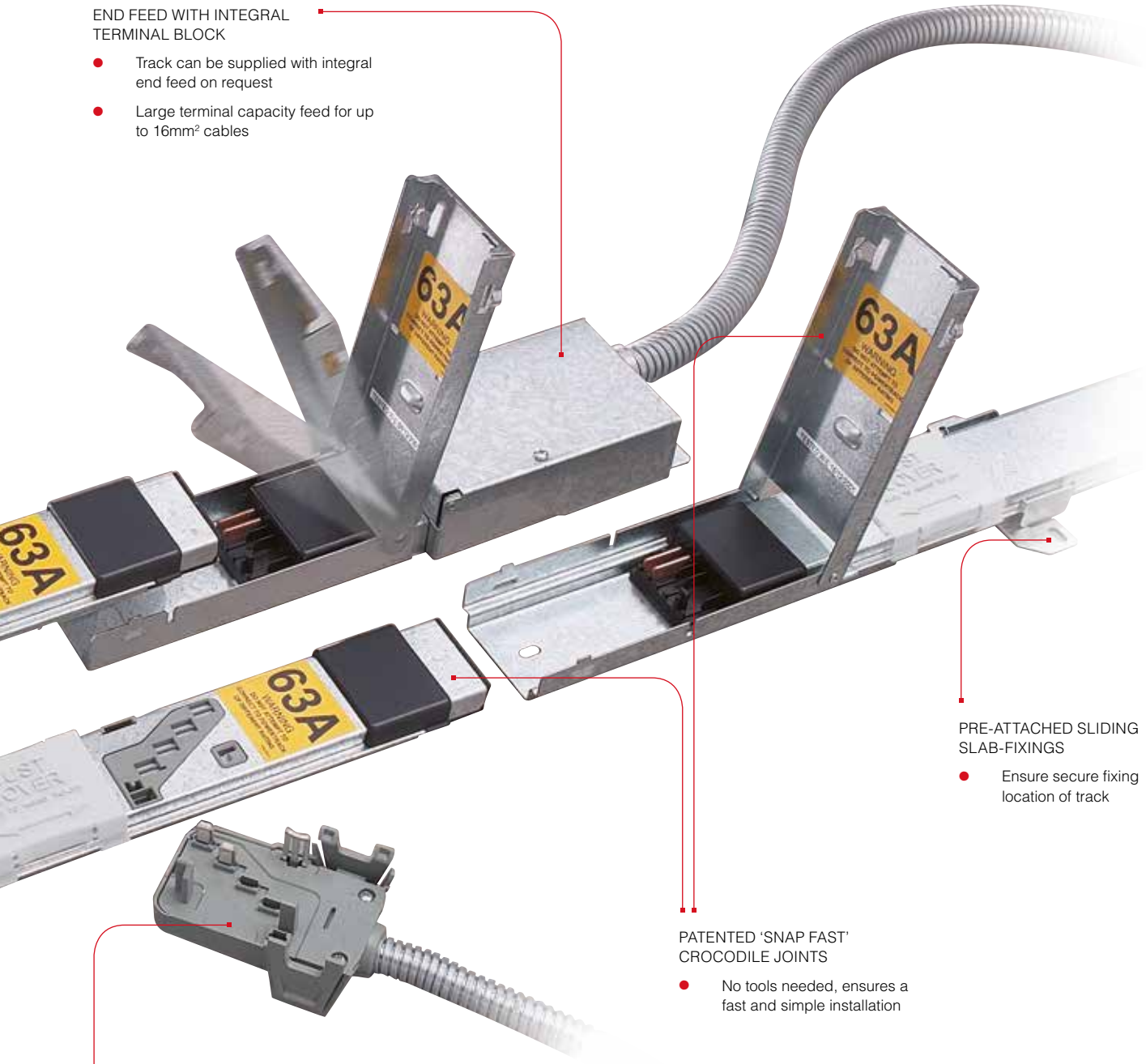

END FEED WITH INTEGRAL TERMINAL BLOCK

- Track can be supplied with integral end feed on request
- Large terminal capacity feed for up to 16mm² cables

PRE-ATTACHED SLIDING SLAB-FIXINGS

- Ensure secure fixing location of track

PATENTED 'SNAP FAST' CROCODILE JOINTS

- No tools needed, ensures a fast and simple installation

KEY CODED AND COLOUR CODED TAP-OFFS AND SOCKETS

- Provides mechanical protection against cross pole contamination

SOCKET SPACINGS

- 300mm socket spacings
- Enables tap-off to be fitted at regular intervals

Interact Under

63 AMP SYSTEM

63 Amp Track

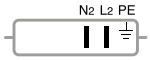

STANDARD GREY SPN

AUX GREEN SINGLE PHASE

CLEAN EARTH RED CE

3 PHASE GREEN TPN

DUAL CE & STD RED / GREY DUAL

1.2m TRACK		PE IS EARTHED TO CASE		PE IS EARTHED TO CASE	
PITCH 300MM 4 SOCKETS	**UB61233GRY**	**UB61233GRN**	**UB61234RED**	**UB61235GRN**	**UB61236DUO**
2.4m TRACK					
PITCH 300MM 8 SOCKETS	**UB62433GRY**	**UB62433GRN**	**UB62434RED**	**UB62435GRN**	**UB62436DUO**
3.6m TRACK					
PITCH 300MM 12 SOCKETS	**UB63633GRY**	**UB63633GRN**	**UB63634RED**	**UB63635GRN**	**UB63636DUO**

All 63A underfloor powertrack incorporate shutters and are rated to IP4X. Complies with the requirements of BS EN 61534.
Track comes with the following slab mounting brackets: 1.2m = 1, 2.4m = 1, 3.6m = 2

Interact Under

63 AMP SYSTEM

63 Amp System

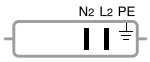

STANDARD GREY

AUX GREEN

CLEAN EARTH RED

3 PHASE GREEN

DUAL CE & STD RED / GREY

End Feeds

Standard Grey	Aux Green	Clean Earth Red	3 Phase Green	Dual CE & Std Red / Grey
STANDARD				
UF63GRY	**UF63GRN**	**UF64RED**	**UF65GRN**	**UF66DUO**
OPPOSITE END FEED				
UF63GRYLH	**UF63GRNLH**	**UF64REDLH**	**UF65GRNLH**	**UF66DUOLH**

Each opposite End Feed comes with an end cap to close off the powertrack run.
Terminal Capacity = 16mm².

Integral Feed Track

Standard Grey	Aux Green	Clean Earth Red
1.2M* PITCH 300MM 4 SOCKETS		
IFUB61233GRY	**IFUB61233GRN**	**IFUB61234RED**
2.4M* PITCH 300MM 8 SOCKETS		
IFUB62433GRY	**IFUB62433GRN**	**IFUB62434RED**
3.6M* PITCH 300MM 12 SOCKETS		
IFUB63633GRY	**IFUB63633GRN**	**IFUB63634RED**

* Nominal length of Interact Underfloor Power excluding feed section. Feed section is 100mm in length.

Flexible Interlinks

Standard Grey	Aux Green	Clean Earth Red	3 Phase Green	Dual CE & Std Red / Grey
1.2M				
UI6312GRY	**UI6312GRN**	**UI6412RED**	**UI6512GRN**	**UI6612DUO**
2.4M				
UI6324GRY	**UI6324GRN**	**UI6424RED**	**UI6524GRN**	**UI6624DUO**
3.6M				
UI6336GRY	**UI6336GRN**	**UI6436RED**	**UI6536GRN**	**UI6636DUO**

Interact Under

Tap-off Leads

TYPE	PIN POSITION						CABLE / CONDUIT	CURRENT RATING	PROTECTION	3 METRE** 2.5MM²	3 METRE** 4.0MM²	5 METRE* 2.5MM²	5 METRE* 4.0MM²	KEY CODES†
STANDARD GREY				N2	L2	PE	LSF / LSF	13A	FUSED	UT31301C		UT51301C		
							16MM	32A	UNFUSED		UT33201†††		UT53201†††	
							16MM	13A	FUSED	UT31301		UT51301		
AUX / PHASE 1 GREEN	PE	N1	L1				LSF / LSF	13A	FUSED	UT31302C		UT51302C		
							16MM	32A	UNFUSED		UT33202†††		UT53202†††	
							16MM	13A	FUSED	UT31302		UT51302		
PHASE 2 GREEN	PE	N1		L2			LSF / LSF	13A	FUSED	UT31310C		UT51310C		
							16MM	32A	UNFUSED		UT33210		UT53210	
							16MM	13A	FUSED	UT31310		UT51310		
PHASE 3 GREEN	PE	N1			L3		LSF / LSF	13A	FUSED	UT31311C		UT51311C		
							16MM	32A	UNFUSED		UT33211		UT53211	
							16MM	13A	FUSED	UT31311		UT51311		
ALL PHASE GREEN	PE	N1	L1	L2	L3		16MM	28A	UNFUSED		UT33205		UT53205	
CE RED	CE	N1	L1			PE	LSF / LSF	13A	FUSED	UT31304C		UT51304C		
							16MM	32A	UNFUSED		UT33204†††		UT53204†††	
							16MM	13A	FUSED	UT31304		UT51304		
DUO (RED)	CE	N1	L1	N2	L2	PE	20MM	28A	UNFUSED		UT33206		UT53206	

Tap-offs are supplied as single cables inside steel flexible conduit, except those with 'C' suffix, which are supplied with 3 or 4 core LSF flex, as appropriate. * Unfused tap-offs in excess of 3m, must only be used on powertrack protected with a 32A (or less) circuit protection device. ** 3M tap offs. Stated length refers to length of wires within the unit, not the conduit length. Conduit length will be between 2.7 and 2.8 meters in length when fully extended. When un-extended, conduit length will decrease by a further 0.1 to 0.2 meters. Minimum length of un-extended conduit will be 2.5 meters.
This is to comply with BS7671:2008 17th Edition IET Wiring Regulations. † Key codes shown are from the perspective of the Power Track socket, the tap-off key code will be a mirror image when viewed from underneath.
††Add 'DE' suffix for Dual Earth High Integrity Earthing, e.g. UT51301DE. Unfused tap-offs – High Integrity Earthing as standard. Fused tap-offs – add '607' suffix for High Integrity Earthing by use of a single 4mm² earth conductor, e.g. UT51301607 ††† Neutrik tap-offs - add 'DEN' suffix for Dual Earth High Integrity Earthing with a neutrik connector e.g. UT33201DEN. For UT33204 and UT53204 add 'N' suffix for the neutrik connector

Other Components

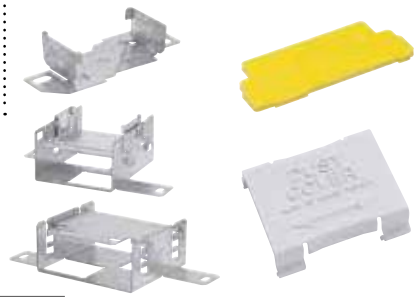

PART NO.	DESCRIPTION
UK1	Additional Slab Brackets
UK3	Additional End Plates
UK5*	Height Adjustable Slab Bracket – Track 17mm, 27mm And 39mm
UK5F*	Height Adjustable Slab Bracket – End Feed 17mm, 27mm And 39mm
UKDC	Additional Dust Cover

* Fixing brackets should be positioned within 300mm from either end of a track run and either side of all joints.
Minimum support requirement 3.6m length = 4 brackets, 2.4m length = 3 brackets, 1.2m length = 2 brackets.

†† In the published 17th Edition of the IET Wiring Regulations, these requirements are found in Regulation 543.7. (16th Edition = Section 607)

CABLELINK PLUS MODULAR

RANGE INTRODUCTION

Cablelink Plus Modular Floorboxes have been specifically engineered to ensure robustness, a faster installation and maximum life span flexibility.

The unique "Ladder" design enables modules to be positioned at lower heights within the box to cater for Cat 6, 6A & 7 patch leads, transformer plug tops and audio visual applications. The design allows the complete box and modules to be easily installed and removed.

HOW TO SPECIFY

A range of modular 2, 3 and 4 module floorboxes designed for robustness, maximum product life, easy installation and tested to EN50085-2-2. Product to utilise a "ladder" design to enable modules to be positioned and 100-124mm heights with increased clearance for Cat 6 & 6A patch leads, transformer plugs and audio visual applications. Product to have a self-closing lid with locking option available. Provision of RCD protection to support compliance to 17th Edition Wiring Regulations.

FEATURES & BENEFITS

TESTED TO EN 50085-2-2 TO ACCEPT 5000N LOAD

SUPPORTS CAT 6, CAT 6A & CAT 7

QUICK RELEASE BLADES
Ensures fast and simple installation

FLEXIBLE SOULTION
Choice of two frame sixes provide 3 and 4 module options

COMPLIES WITH WIRING REGULATIONS
Provision of RCD protections supports IET 17th Edition Wiring Regulations

SELF CLOSING LID
In accordance with IEC 61534-22

WIDE RANGE OF POWER AND DATA ACCESSORIES

5 YEAR GUARANTEE

CP Modular

Cablelink Plus Modular Floorbox

TESTED TO EN 50085-2-2 TO ACCEPT 5000N LOAD

HANDLE

- Designed for improved accessibility

OPTIONAL LOCKABLE LID

- Added security when not in use

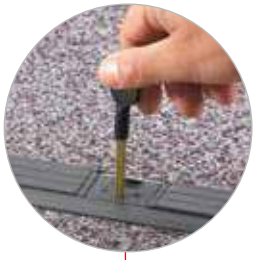

8MM RECESSED LID

- Simple carpet cut out
- Easily removable and reversible for improved accessibility
- Can be hinged from either of two sides
- Self Closing in accordance with BS EN 61534-22

OUTLET BOX COLOUR

- Grey (RAL 7011)

ROBUST CORD CAPS

- Designed for improved retention

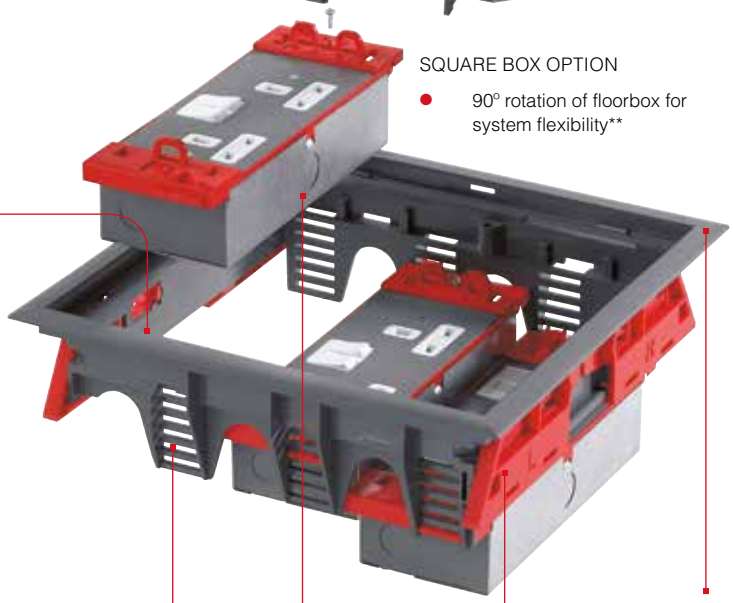

SQUARE BOX OPTION

- 90° rotation of floorbox for system flexibility**

MODULE RETAINER CLIP
Secures module to 'ladder' frame*

OPTIONAL LID TETHER

- Added security
- Eliminates lid losses

LADDER DESIGN

- Modules can be positioned at different heights (100-124mm range)
- Increased clearance for Cat 6, 6A and 7 patch leads, transformer plugs and audio visual applications
- Improved module retention via easy fix clips

ONE PIECE MOULDED FRAME

- Simple ordering of product
- Faster installation

BLADES

- Quick release blades to secure firmly in position for a "fit and forget" installation
- No tools required for faster installation
- Self adjusting blades – ensures floorbox remains secure throughout service life
- Fixes to floor thicknesses of 15-50mm

MODULES

- Design enables modules to be installed/removed whilst box is still in situ
- Left and right handed power plates provide plug top cable strain relief
- Pre-wired power modules available for quicker installation
- Cat 6, 6A and 7 and fibre solutions available

*When module retainer clip fitted, first rung of 'ladder' frame can not be used.
**Only on 265 X 265 boxes.

CP Modular

Cablelink Plus Modular Floorbox

The Modular Floorbox and Modules are ideal for use with the Interact Underfloor Power System – see page 371 for details.

Modular Floorbox Selector Guide

The Design Service enables bespoke customised floorboxes to be configured and delivered to meet the customers individual requirements.

Step 1 Choose the number of compartments required (3 or 4 compartments)

Step 2 Choose whether the lid is lockable or not

Step 3 Choose which modules are required (See below for power options and next page for data / other options)

Step 4 What height are the modules to be fitted (100mm, 108mm, 116mm or 124mm)

Step 5 Do the power modules require tap-offs?

Step 6 If yes choose which type (See page 376 for tap-off options)

Floorbox

Box Size Compartment	265 x 265mm 3	340 x 265mm 4
100–124MM DEPTH	**CRMB265-3GRY***	**CRMB340-4GRY***

* Lockable option available – add suffix 'L' e.g CRMB265-3GRY**L**. **Floorbox lids must never be locked whilst in use. Box not supplied with key.** Supplied complete as floorbox with 8mm recess lid. Smaller compartment floorbox available in Cablelink Plus Single Pan Box, see page 384 for more details.
For pre-configured options available – see page 381.

Serviced Power Modules

LEFT HAND MODULE – CRM11730

RIGHT HAND MODULE – CRM11730RH

Description	Left Hand Modules	
	Standard	Clean Earth
2G 13A SWITCH SOCKET OUTLET	**CRM11730***	**CRM11730CE***
2G 13A SWITCH SOCKET OUTLET NON STANDARD (T PIN)	**CRM11730NS***	**CRM11730NSCE**
2G 13A SOCKET OUTLET	**CRM11731***	
2G 13A 30MA PASSIVE RCD SWITCH SOCKET OUTLET	**CRM11735***	**CRM11735CE**
3G 13A SOCKET OUTLET	**CRM11720**	**CRM11720CE**
4G 13A SWITCH SOCKET OUTLET†	**CRM11750**	**CRM11750CE**
4G 13A SWITCH SOCKET OUTLET NON STANDARD (T PIN)†	**CRM11750NS**	**CRM11750NSCE**
4G 13A SOCKET OUTLET†	**CRM11751**	

† Double module size with staggered arrangement to provide strain relief clearance for moulded plugs.
* Add '**RH**' suffix for Right Hand Module, e.g. CRM11730**RH**

Additional plates are available via the Design Service, see page 16

- Modules are available Left Hand and Right Hand to achieve a 'staggered' arrangement
- 'Staggered' arrangement ensures strain relief clearance for moulded plug tops
- Add 'RH' suffix for Right Hand Module, e.g CRM11730RH
- When four socket outlets are required, order CRM11750 'staggered' arrangement
- For more detail on how to order and configure your Cablelink Plus Modular Floorbox, please see page 731-734

Modules have unique two piece design to provide quick and safe installation. Earthing achieved through screwed connection between base and module plate.

CP Modular

Accessory Modules

The conduit entry faces are integral with the accessory plate, enabling quick termination to the power or data plate and facilitates the remaining part of the back box to be fitted quickly with no risk to wiring being damaged.

Unserviced Data Modules

CRM21201

CRM21215

Part No.	Description
CRM21201	4 x LJU6C Apertures (Knockouts)
CRM21301	6 x LJU6C Apertures
CRM21500	4 x ST Fibre Connector Apertures
CRM21215*	4 x LJU6C Aperture Wave Plate
CRM21117	4 x Alphasnap Apertures
CRM31501	2 x Euro 50 x 50mm Apertures

Earthing studs are provided on all Unserviced data modules to enable a reliable connection to earth to be made.
Earthing Kit CX-10 is recommended for use to ensure the earthing cable is connected correctly.
* Larger back boxes are available on request via the Design Service, see page 16.

Optional Extras

LID TETHER

Part No.	Description
CX-01	Cable Retainers – pack of 10
CX-02	Lid Tether Kit – pack of 5
CX-04GRY	Cord Cap for 265 x 265 and 340 x 265mm Lid – Grey
CX-10	Earthing Kit – pack of 10
CRXKEY	Lock Key – pack of 2
CRM31201	Blank Module

CP Modular

Pre-Configured Range

To aid fast and simple product selection, storage and installation, a selection of popular pre-configured floorboxes are available to order:

- 2, 3 or 4 module options
- Supplied with Serviced Power and/or Unserviced Data Plates
- Choice of standard modules or pre-wired to a tap-off
- Pre-wired boxes supplied with a 3m tap-off, High Integrity Earthing compliance as standard

2 Module Configuration – 265 x 265mm Floorbox

	Part no.	Module 1	Module 2	Module 3	Tap-Off
	CRM321	2G Switch Socket Outlet	BLANK	4G DATA PLATE LJU6C	NA
	CRM321W	2G Switch Socket Outlet	BLANK	4G DATA PLATE LJU6C	UT33201 GREY 4MM² 3M

All modules supplied set at 90mm from top of lid to base of module.

3 Module Configurations – 265 x 265mm Floorbox

	Part no.	Module 1	Module 2	Module 3	Tap-Off
	CRM333	2G Switch Socket Outlet	4G Data Plate LJU6C	4G Data Plate LJU6C	NA
	CRM333W	2G Switch Socket Outlet	4G Data Plate LJU6C	4G Data Plate LJU6C	UT33201 GREY 4MM² 3M
	CRM334	2G Switch Socket Outlet	2G Switch Socket Outlet	4G Data Plate LJU6C	NA
	CRM334W	2G Switch Socket Outlet	2G Switch Socket Outlet	4G Data Plate LJU6C	UT33201 GREY 4MM² 3M
	CRM336	2G Switch Socket Outlet Clean Earth	2G Switch Socket Outlet Clean Earth	4G Data Plate LJU6C	NA
	CRM336W	2G Switch Socket Outlet Clean Earth	2G Switch Socket Outlet Clean Earth	4G Data Plate LJU6C	UT33204 CE RED 4MM² 3M

All modules supplied set at 90mm from top of lid to base of module

4 Module Configurations – 340 x 265mm Floorbox

	Part no.	Module 1	Module 2	Module 3	Module 4	Tap-Off
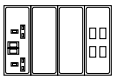	CRM431	2G Switch Socket Outlet	Blank	Blank	4G Data Plate LJU6C	NA
	CRM431W	2G Switch Socket Outlet	Blank	Blank	4G Data Plate LJU6C	UT33201 GREY 4MM² 3M
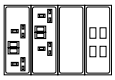	CRM434	2G Switch Socket Outlet	2G Switch Socket Outlet	Blank	4G Data Plate LJU6C	NA
	CRM434W	2G Switch Socket Outlet	2G Switch Socket Outlet	Blank	4G Data Plate LJU6C	UT33201 GREY 4MM² 3M
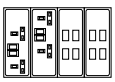	CRM444	2G Switch Socket Outlet	2G Switch Socket Outlet	4G Data Plate LJU6C	4G Data Plate LJU6C	NA
	CRM444W	2G Switch Socket Outlet	2G Switch Socket Outlet	4G Data Plate LJU6C	4G Data Plate LJU6C	UT33201 GREY 4MM² 3M

All modules supplied set at 90mm from top of lid to base of module.

PRODUCT APPLICATION

MULTIMEDIA SOLUTIONS – COMBINATION PLATES

The combination plates provide unrivalled aesthetic enhancement and reduced visual impact on the wall, created when numerous devices are individually installed in one location. Additionally they offer a functional solution for when power, audio visual and data connectivity are required at a single point.

There are 10 different configurations offered over 4 of our ranges – Logic Plus, Edge, Elements and Aspect.

CABLELINK PLUS SINGLE PAN BOX

RANGE INTRODUCTION

Cablelink Plus Single Pan Box provides an effective interface between services beneath the floor and the office environment.

Designed to offer robustness and constructed with a single piece metal frame, the floorbox is available with 1, 3 and 4 compartments and a choice of 70mm or 95mm box depths to cater for floor voids of restricted space.

HOW TO SPECIFY

A range of 1, 2, 3 and 4 module single pan floorboxes designed to meet EN50085-2-2. Product to incorporate a ratchet self-levelling system enable rapid fitting of the frame and lid. Pan design to incorporate side knockouts and compartment segregation and be available in both 70mm and 95mm pan depths. Product to have a self-closing lid with locking option available. Provision of RCD protection to support compliance to 17th Edition Wiring Regulations.

FEATURES & BENEFITS

TESTED TO EN 50085-2-2 TO ACCEPT 5000N LOAD

SUPPORTS CAT 6 & CAT 7
70mm through the use of the wave plate

SHALLOW VOIDS ACCOMMODATED
With 70mm pan depth

ADJUSTABLE DEVICE PLATE
To increase wiring space or greater plug top clearance

COMPLIES WITH WIRING REGULATIONS
Provision of RCD protections supports IET 17th Edition Wiring Regulations

SELF-CLOSING LID
In accordance with IEC 61534-22

FLOORBOXES ARE RATED IP2X IN ACCORDANCE WITH BS EN 50085-1

WIDE RANGE OF POWER AND DATA ACCESSORY PLATES

5 YEAR GUARANTEE

CP Single Pan Box

Cablelink Plus Single Pan Box

TESTED TO EN50085-2-2 TO ACCEPT 5000N LOAD

HANDLE

- Designed for improved accessibility

OPTIONAL LOCKABLE LID

- Added security when not in use

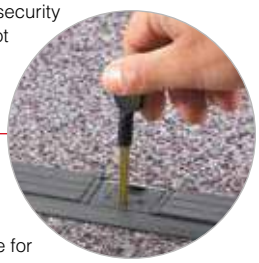

LID

- Simple carpet cut out
- Easily removable and reversible for improved accessibility
- Lid can be hinged from either of two sides
- Self closing in accordance with IEC 61534-22

ROBUST CORD CAPS

- Designed for improved retention

OUTLET BOX COLOUR

- Grey (RAL 7011)

RATCHET LEVELLING SYSTEM

- Self levelling and rapid fitting of frame and lid

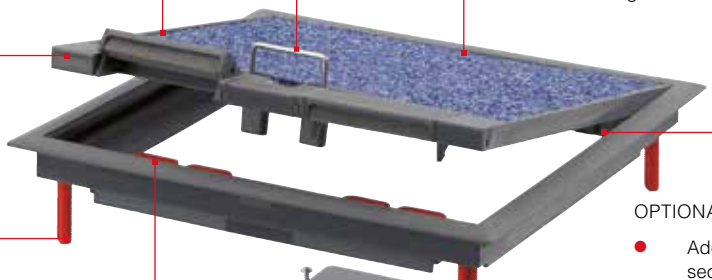

OPTIONAL TETHER

- Added security
- Eliminates lid losses

OPTIONAL CABLE RETAINERS

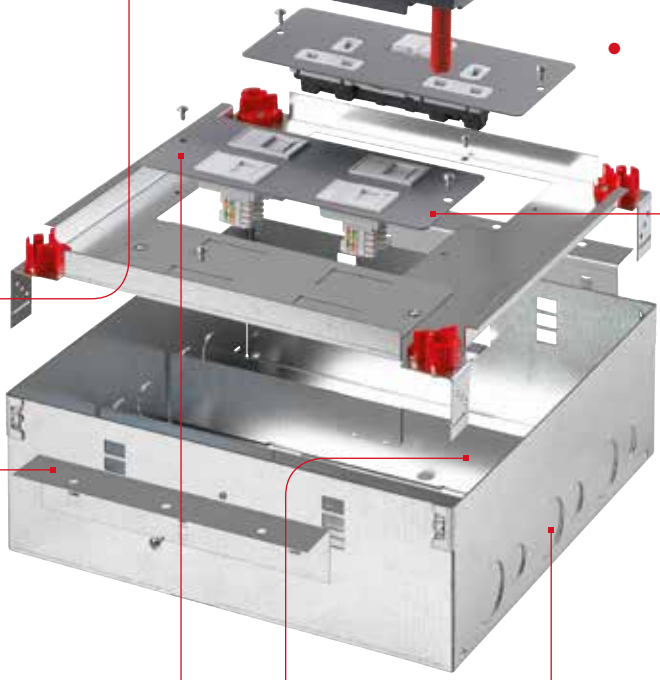

STAGGERED PLATE

- Provides strain relief clearance for moulded plug tops
- Device plate positioned to provide 35mm wiring space for 70mm deep box and 45mm wiring space for 95mm deep box
- Stagger plate only available within 3 compartment floorbox

FLANGE FIXINGS

- Fast and simple installation

COMPARTMENT SEGREGATION

WIDE RANGE OF POWER AND DATA PLATES

- Suitable for all applications
- Pre-configured options available for fast and simple installation on site

SIDE KNOCKOUTS

- Pre-cut for fast and simple installation

ONE PIECE FRAME

- Robust metal design
- 70mm pan depth is ideal for shallow applications and plenum floors
- 70mm and 95mm pan depths available

CP Single Pan Box

Cablelink Plus Single Pan Box

The Single Pan Box is ideal for use with the Interact Underfloor Power System – see page 371 for more details. The design service enables bespoke customised floorboxes to be configured and delivered to meet individual requirements.

Floorbox selector guide

Step 1 Choose either a 1, 3 or 4 compartment box

Step 2 Choose the depth required (70mm or 95mm)

Step 3 Choose which accessories are required (See below for accessory plate options)

Step 4 Do the power modules require tap-offs?

Step 5 If yes choose which type? (see page 376 for tap-off options)

Floorbox

Compartments	1	3	4
Box Size	100 x 200mm	265 x 265mm	340 x 265mm
70mm Depth	CRB100UK-70-1GRY**	CRB265UK-70-3GRY*	CRB340UK-70-4GRY*
95mm Depth	CRB100UK-1GRY**	CRB265UK-3GRY*	CRB340UK-4GRY*

*Lockable option available – add suffix 'L' e.g CRB265UK-3GRYL. Floorbox lids must never be locked whilst in use. Box not supplied with key. 95mm depth floorbox device plate provides wiring space of 45mm allowing for Cat 6 / Cat 7 compliance. 70mm depth floorbox device plate provides wiring space of 35mm. Spare lids and frames are available, please see page 439 for details. **These boxes will only accept CXP10745 for power plate option.

Accessory Plates

Accessory plates are common to most ranges, they will fit all Cablelink Plus Single Pan, Screed and Onix Plus™ floorboxes. Standard Plates are for use with 100 x 200mm, 265 x 265mm and 340 x 265mm floorboxes.

Serviced Power Plates

Standard Part No.	Description
CXP10730*=	2G 13A Switch Socket Outlet
CXP10730NS*=	2G 13A Switch Socket Outlet Non-Standard (T Pin)
CXP10731*=	2G 13A Socket Outlet
CXP10731NS	2G 13A Socket Outlet Non Standard (T Pin)
CXP10745	2G 13A Angled Socket Outlet
CXP10735*	2G 13A RCD 30mA Passive Switch Socket Outlet**
CXP10760	2G 13A Switch Socket Outlet – Side Wired
CXP10720	3G 13A Socket Outlet
CXP10740	2G 16A 2P+E German Socket Outlet** Non UK

* For Clean Earth wiring – add suffix 'CE' e.g CXP10730CE.
Clean Earth Switched Power plates are identified with red rockers, unswitched with red sockets.
** Requires a 45mm wiring space, not suitable with 70mm depth boxes
= Supplied with the MK Electric 3-pin safety shutter as standard.

Unserviced Data Plates

Standard Part No.	Description
CXP20200	2 x LJU6C Apertures
CXP20201*	4 x LJU6C Apertures (Knockouts)
CXP20215	4 x LJU6C Wave Apertures
CXP20205	4 x Krone Apertures
CXP20301	6 x LJU6C Apertures
CXP30501	2 x Euro 50 x 50mm Apertures
CXP30503	1 x Euro 150 x 50mm Aperture
CXP30502	2 x 45 x 45mm Module Apertures
CXP20500	4 x ST Fibre Connector Apertures
CXP30201	Blank Plate

* Data apertures are supplied as knockouts.

Optional Extras

Part No.	Description
CX-01	Cable Retainers (Pack of 10)
CX-02	Lid Tether Kit (Pack of 5)
CX-03GRY	Cord Cap for 100 x 200mm Lid – Grey (Pack of 10)
CRXKEY	Lock Key (Pack of 2)

CP Single Pan Box

Pre-Configured Range

To aid fast and simple product selection, storage and installation, a selection of popular pre-configured 95mm floorboxes are available to order:

- 1, 3 or 4 compartment options
- Supplied with Service Power/or Unserviced Data Plates

1 Compartment Configuration – 100 x 200mm Floorbox

	Part no.	Accessory Plate 1	Tap-Off
	CRP100-RCD	RCD Socket	NA
	CRP101	2G 13A Angled/Unswitched Socket Outlet	NA
	CRP121	1G 13A Switch Socket and 2 x LJU6C aperture	NA

3 Compartment Configurations – 265 x 265mm Floorbox

	Part no.	Accessory Plate 1	Accessory Plate 2	Accessory Plate 3	Tap-Off
	CRP321	2G Switch Socket Outlet	Blank	4G Data Plate LJU6C	NA
	CRP321W	2G Switch Socket Outlet	Blank	4G Data Plate LJU6C	UT33201 GREY 4mm² 3m
	CRP333	2G Switch Socket Outlet	4G Data Plate LJU6C	4G Data Plate LJU6C	NA
	CRP333W	2G Switch Socket Outlet	4G Data Plate LJU6C	4G Data Plate LJU6C	UT33201 GREY 4mm² 3m
	CRP334	2G Switch Socket Outlet	2G Switch Socket Outlet	4G Data Plate LJU6C	NA
	CRP334W	2G Switch Socket Outlet	2G Switch Socket Outlet	4G Data Plate LJU6C	UT33201 GREY 4mm² 3m
	CRP336	2G Switch Socket Outlet Clean Earth	2G Switch Socket Outlet Clean Earth	4G Data Plate LJU6C	NA
	CRP336W	2G Switch Socket Outlet Clean Earth	2G Switch Socket Outlet Clean Earth	4G Data Plate LJU6C	UT33204 CE RED 4mm² 3m

4 Compartment Configurations – 340 x 265mm Floorbox

	Part no.	Accessory Plate 1	Accessory Plate 2	Accessory Plate 3	Accessory Plate 4	Tap-Off
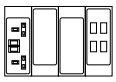	**CRP421**	2G Switch Socket Outlet	Blank	Blank	4G Data Plate LJU6C	NA
	CRP421W	2G Switch Socket Outlet	Blank	Blank	4G Data Plate LJU6C	UT33201 GREY 4mm² 3m
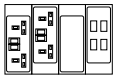	**CRP434**	2G Switch Socket Outlet	2G Switch Socket Outlet	Blank	4G Data Plate LJU6C	NA
	CRP434W	2G Switch Socket Outlet	2G Switch Socket Outlet	Blank	4G Data Plate LJU6C	UT33201 GREY 4mm² 3m
	CRP444	2G Switch Socket Outlet	2G Switch Socket Outlet	4G Data Plate LJU6C	4G Data Plate LJU6C	NA
	CRP444W	2G Switch Socket Outlet	2G Switch Socket Outlet	4G Data Plate LJU6C	4G Data Plate LJU6C	UT33201 GREY 4mm² 3m

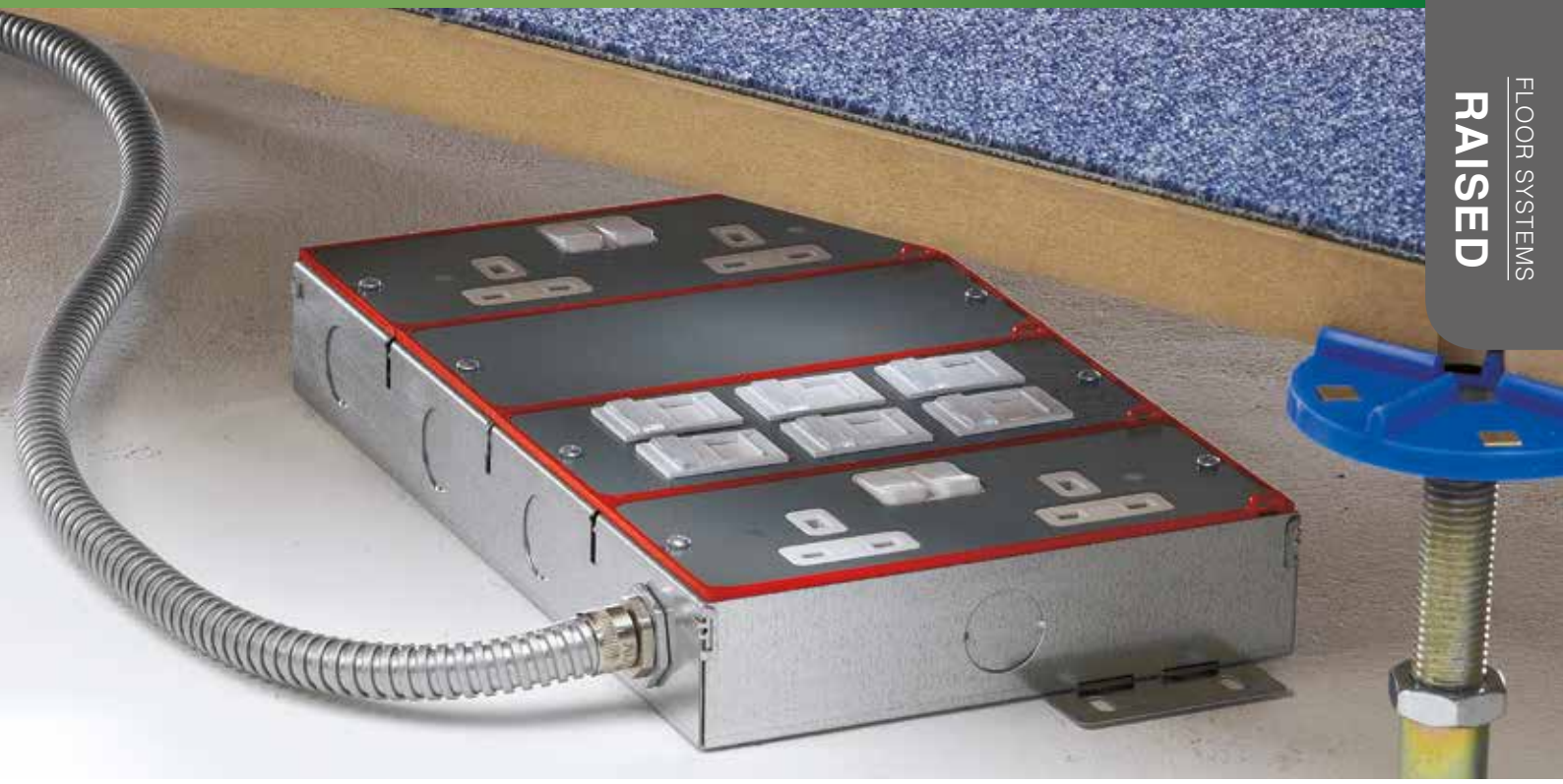

SLAB BOXES

RANGE INTRODUCTION

The Slab Box provides the same services (power and data) as a floorbox, but with the benefit of a more aesthetically pleasing grommet access.

FEATURES & BENEFITS

FLEXIBLE EFFECTIVE UNDERFLOOR SOLUTON

ALTERNATIVE OPTION TO FLOORBOXES
Use in conjunction with a grommet for an aesthetic alternative

COMPLIES WITH WIRING REGULATIONS
Provision of RCD protections supports IET 17th Edition Wiring Regulations

WIDE RANGE OF POWER AND DATA ACCESSORIES

FAST AND EFFICIENT INSTALLATION

5 YEAR GUARANTEE

HOW TO SPECIFY

A range of 1, 2, 3 and 4 module Slab Boxes designed to be used on raised floor systems. Cable outlet via floor grommet products provide less obtrusive and aesthetically pleasing access to power and data services. “Products to feature” options for Cat 5E, 6 and fibre solutions with a wide range of power sockets and data plates and outlets. Side and end knockouts ensure fast and simple installation. Provision of RCD protection to support compliance to 17th Edition Wiring Regulations.

Slab Boxes

CONNECTION POINT FOR THE DISTRIBUTION OF POWER AND DATA SERVICES

- Flexible and cost effective underfloor solution

CABLE OUTLET VIA THE GROMMET

- Aesthetically less obtrusive alternative to other underfloor solutions
- Facilitates minimum floor disruption

WIDE RANGE OF POWER SOCKETS, DATA PLATES AND OUTLETS

- Comprehensive range to meet all requirements
- Product quality guaranteed

CAT 5E, 6, AND FIBRE SOLUTIONS AVAILABLE

- Offers flexibility and choice of data solution

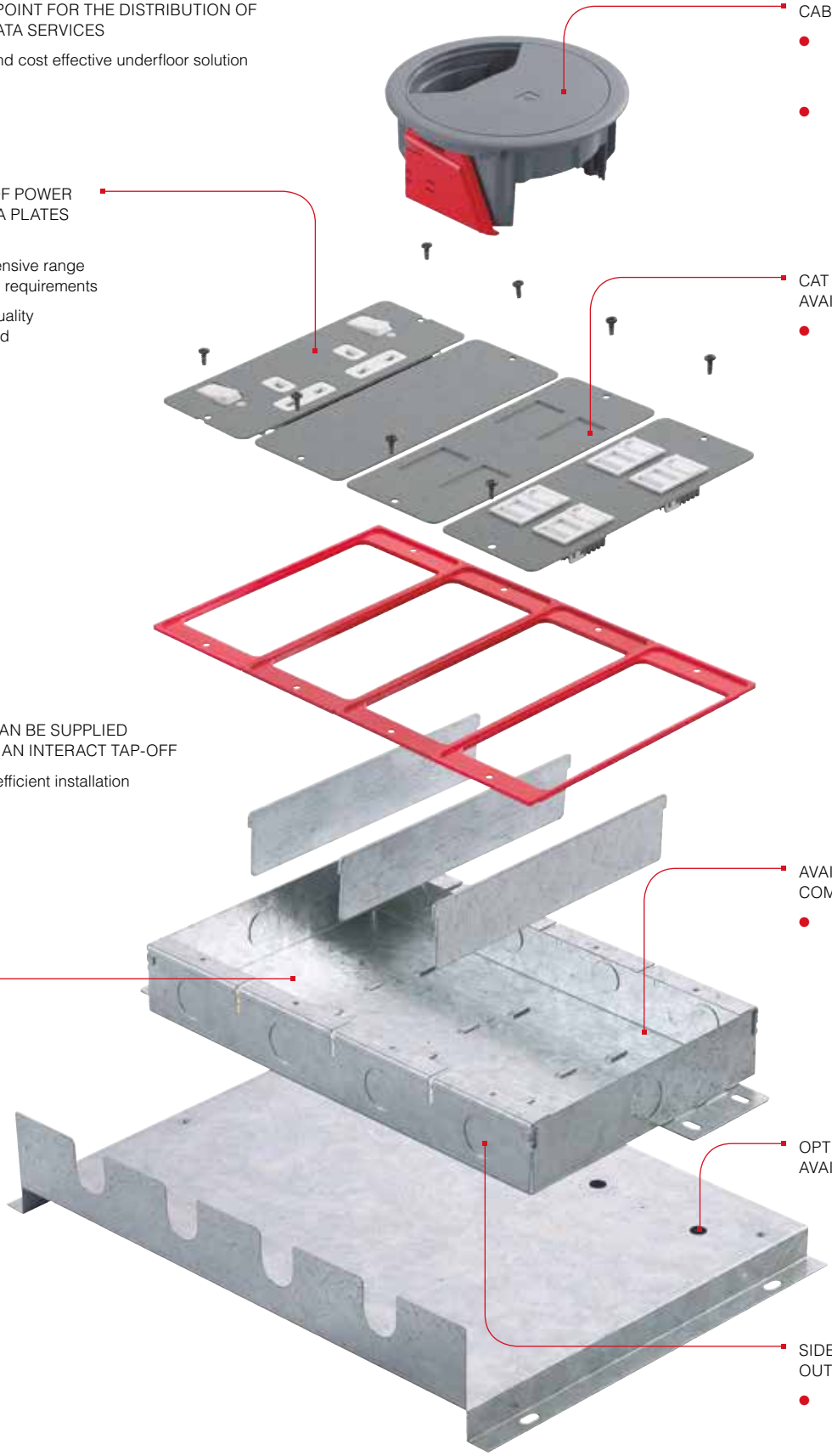

SLAB BOXES CAN BE SUPPLIED PRE-WIRED TO AN INTERACT TAP-OFF

- Fast and efficient installation

AVAILABLE IN 1, 2, 3 AND 4 COMPARTMENTS

- Accommodates a wide range of accessory mounting plates

OPTIONAL BOX SUPPORT AVAILABLE

SIDE AND END ENTRY KNOCK OUTS

- Ensures a fast and simple installation

Slab Boxes

Slab Boxes

Part No.	Description
SB100	1 Compartment 190 x 76 x 45mm
SB200	2 Compartments 190 x 154 x 45mm
SB300	3 Compartments 190 x 231 x 45mm
SB400	4 Compartments 190 x 310 x 45mm

Box Supports

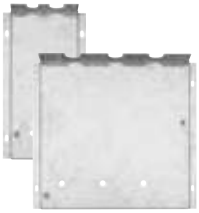

Part No.	Description
SB9001	1 Compartment Box Support
SB9002	2 Compartments Box Support
SB9003	3 Compartments Box Support
SB9004	4 Compartments Box Support

Partitions

Part No.	Description
SB9005	Blank Partition
SB9006	Interlink Partition

Slab Boxes

Accessory Plates

Accessory Plates are supplied in Light Grey (LGY) finish.

Serviced Power Plates

CRX10731NS

CRX10720

CRX10741

Part No.	Description
CRX10730*†	2G 13A Switch Socket Outlet
CRX10735*†	2G 13A Passive RCD Switch Socket Outlet
CRX10731†	2G 13A Socket Outlet
CRX10731NS†	2G 13A Socket Outlet Non-Standard (T Pin)
CRX10720	3G 13A Socket Outlet
CRX10741	2G 15A 127V USA Socket Outlet (non UK)

* For Clean Earth wiring – add suffix 'CE' e.g CRX10730CE.
† Plates are supplied with the MK Electric 3-pin safety shutter.

Unserviced Data Plates

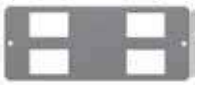
CRX20201

CRX20301

CRX30501

CRX30201

Part No.	Description
CRX20101	2 x LJU/2 Apertures
CRX20201*	4 x LJU6C Apertures
CRX20301	6 x LJU6C Apertures
CRX20215	Angled Mounting Plate to accept 4 x LJU6C aperatures
CRX30501	2 x Euro 50x50mm Apertures **
CRX30502	2 x 45x45mm Apertures
CRX30201	Blank Plate

* Data apertures are supplied as knockouts.
** Will not accept power module.

GROMMETS

RANGE INTRODUCTION

Power, data and accessory grommets offer an ideal solution for a fast, simple and unobtrusive installation.

Easy to install and relocate if necessary, Grommets are ideal for use with Slab Box and DeskPod™, perfect for any office environment.

FEATURES & BENEFITS

ROTARY OR SPLIT LID VARIATIONS
To meet all requirements

ONE TOUCH SELF-ADJUSTING MECHANISIM
For a fast, simple and secure installation

SPRING LOADED BLADES
For fast and simple installation

LID TETHER
For added security

WIDE RANGE
Available in 5” and 8”

5 YEAR GUARANTEE

HOW TO SPECIFY

A range of 5” and 8” power, data and accessory grommets for use on underfloor power systems. Access to be available via rotary or split lid configurations. A one touch self-adjusting fixing mechanism featuring spring loaded blades to enable fast and simple installation. Integral lid tethers to provide additional security and prevent lid losses.

Grommets

Access Grommets

GROMMET COLOUR
- Grey (RAL 7011)

ROTARY AND SPLIT LID VARIATIONS
- Accept up to 2 x 40mm flexible conduits for maximum data cable access

SIMPLE ACCESS
- Simple 'push fit' for fast installation
- Crush ribs for secure fixing

SPLIT LID OPTION
- Integral foam inserts for secure cable grip to minimise pressure loss in plenum floors

SPRING LOADED BLADES
- Fast and simple installation
- Secure fixing guaranteed
- One touch self adjusting fixing mechanism

REVERSIBLE CENTRE LID
- 6mm carpet cut out for improved installation aesthetics

Serviced Grommets

LID TETHER
- Added security
- Eliminates lid losses

GROMMET COLOUR
- Grey (RAL 7011)

ANGLED POWER SOCKETS
- Provide strain relief clearance for moulded plugs

BACK BOX
- 28mm back box pre-fitted for ease of installation

SPRING LOADED BLADES
- Fast and simple installation
- Secure fixing guaranteed
- One touch self adjusting fixing mechanism

UNSERVICED LJU6C OR EURO ACCESSORY GROMMETS ARE AVAILABLE
Compatible with MK data outlets

Grommets

Grommet Boxes

Grommets provide an aesthetic alternative to floorboxes and offer the additional benefits of being fast and simple to install.

- Choose from 5" or 8" grommets
- Range includes both Access Grommets and Serviced Grommets
- Ideal for use with DeskPod™ (8" Grommet) or Slab Box

5" Access Grommet Boxes

GR500GRY

GR100GRY

GR510GRY

Part Number	Description
GR500GRY	Simple Access Grommet
GR510GRY	Secure Access Grommet
GR100GRY	Split Lid Grommet

5" Power Grommet Boxes

GR200GRY

Part Number	Description
GR200GRY	Power Grommet BS 1363 MK Switch Socket Outlet
GR201GRY	Power Grommet MK Non-Standard Switch Socket Outlet
GR205GRY	Power Grommet BS546 5A MK Switch Socket Outlet

5" Data Outlet Grommet Boxes

GR800GRY

Part Number	Description
GR5050GRY	50 x 50mm EURO Accessory Grommet (unserviced)
GR800GRY	2 x LJU6C Grommet (unserviced)

Grommets

8" Grommets

Larger grommets have an increased cord outlet size making them ideal to house DeskPod™ conduits.

8" Access Grommets

GR855GRY

Part Number	Description
GR850GRY	Simple Access Grommet (push fit)
GR855GRY	Secure Access Grommet*

* Comes with fixing clips

1 Compartment Cablelink Plus Single Pan Floorboxes

Part Number	Description
CRB100UK-1GRY*	100 x 200mm Single Compartment Floorbox – 95mm Deep
CRP100-RCD	100 x 200mm Single Compartment Floorbox fitted with RCD 16A 30mA 2 x module RCD Socket Outlet
CRP101	100 x 200mm Single Compartment Floorbox fitted with 2G 13A Socket Outlet
CRP121	100 x 200mm Single Compartment Floorbox fitted with 1G 13A Socket outlet and 2 x LJU6C aperture

* Accessory Plates – see below for details.

Accessory Plates for 1 Compartment Cablelink Plus Single Pan Floorboxes

Serviced Power Plates

Standard Part No.	Description
CXP10745	2G 13A Angled Socket Outlet

Unserviced Data Plates

Standard Part No.	Description
CXP20101	2 x LJU/2 Apertures
CXP20200	2 x LJU6C Apertures
CXP20201*	4 x LJU6C Apertures
CXP20215	4 x LJU6C Wave Apertures
CXP20205	4 x Krone Apertures
CXP20301	6 x LJU6C Apertures
CXP30501	2 x Euro 50x50mm Apertures
CXP20500	4 x ST Fibre Connector Apertures
CXP30201	Blank Plate

* Data apertures are supplied as knockouts.

DESKPOD™

RANGE INTRODUCTION

DeskPod™ offers a comprehensive range of fully customisable and pre-configured desk modules, providing convenient access to power and data services to the end user, where it is needed.

Delivering the final link in the chain of the power distribution circuit, DeskPod™ modules are compatible with the Interact Underfloor Power System, Cablelink Plus Floorboxes and Grommets.

The range incorporates in-built product design features to address the increasing and varied demands of individual requirements.

HOW TO SPECIFY

A range of 3 and 4 pole desk modules to provide convenient access to power and data services with provision for data modules and RCD protection. Product to be manufactured from anodised aluminium and polycarbonate to provide, chemical, colour fade, impact resistance and flame retardant properties.

FEATURES & BENEFITS

TOTAL FLEXIBILITY
Custom designed and versatile to suit all requirements

MANUFACTURED FROM ANODISED ALUMINIUM AND POLYCARBONATE
Chemical, colour fade, impact resistant and flame retardant

AVAILABLE WITH DUAL USB CHARGING MODULE
With Dynamic Device Recognition ideal for tablets, smart phones, cameras

PRE-WIRED TAP OFFS
For easy installation

COMPLIES WITH WIRING REGULATIONS
Provision of RCD protections supports IET 17th Edition Wiring Regulations

5 YEAR GUARANTEE

DeskPod™

TAP-OFFS

Available pre-wired to tap-offs for quick installation – see page 401

8" GROMMET

Provide access where DeskPods are contained within the floor void – see page 394

INTEGRAL FIXING BRACKET

- In-built 2 position bracket to allow fast and simple mounting of the unit

PROTECTION

- Choice of MCB, RCD, RCBO or unit fusing at 12.5A

INCOMING SUPPLY

- Conduit entry available for hard wiring tap-offs
- Flex entry available for hard wiring to a BS1363 plug
- 3 and 4 pole Wago or Wieland connectors
- Other industry standard options available on request

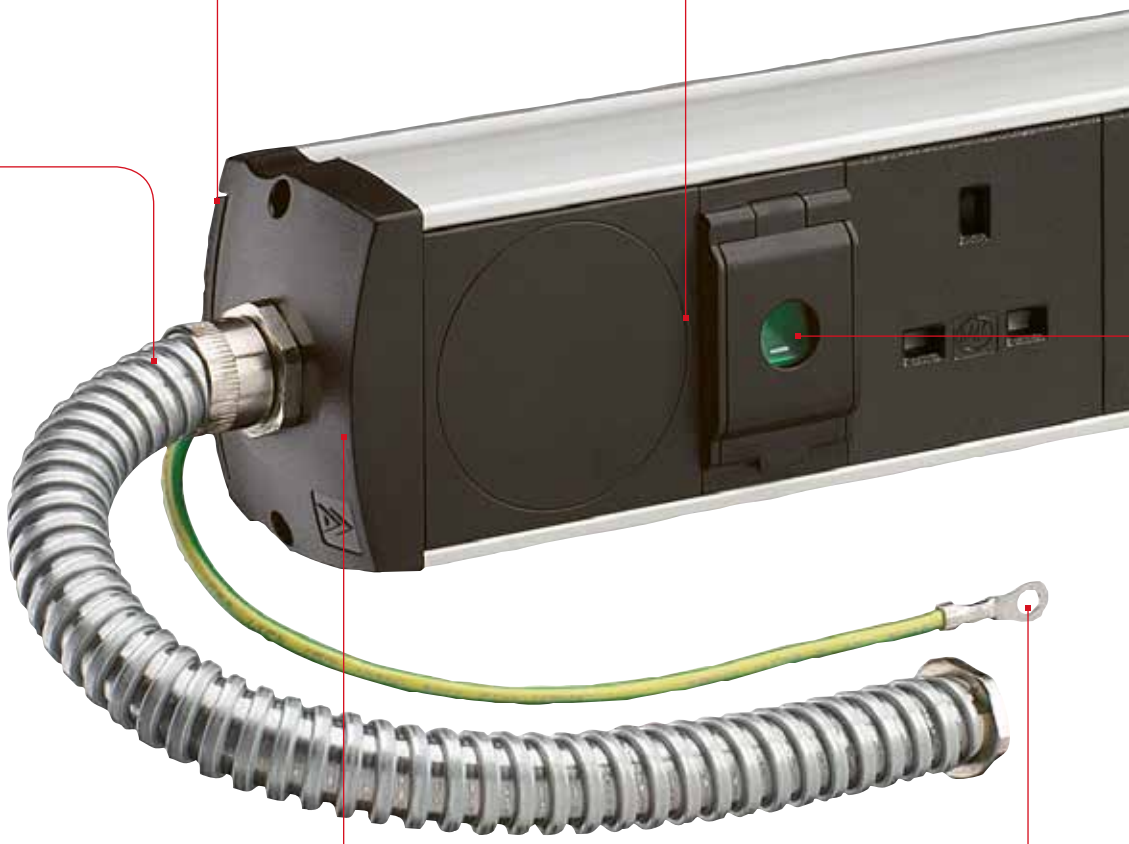

WIRING CONFIGURATION

- Available as Standard, Clean Earth or High Integrity Earthing† compliant

EXTERNAL EARTH LEAD

- All power units include an earth lead to allow bonding to any metalwork, e.g. desk installation

† In the 17th Edition of the IET Wiring Regulations, these requirements are found in Regulation 543.7.

DeskPod™

FUSED

UNFUSED

SOCKET OUTLETS

- All standard socket outlets incorporate the patented MK Electric 3 pin safety shutter as standard
- Option of integral fused (3.15A or 5A) or unfused sockets
- Pre-configured and Custom Design options available to suit your requirements

ANODISED ALUMINIUM EXTRUDED 'POD'

- Styled and finished to be aesthetically pleasing
- Robust construction ensures durability whilst in use

DATA SUPPLY

- 20mm or 25mm flexible conduits in metal or plastic

DATA MODULES

- Available with choice of Euro or LJU6C sized apertures
- Wide range of Euro and LJU6C modules available
- Choose from 2 to 16 module apertures in a 'Data Module Only' unit

SWITCH

- Optional Double Pole Neon Switch available
- Neon Indicator to provide user with visible indication of power supply
- Positive Switch Action – audible indication of switching
- Switch Cover (with viewing cut out) – protects the unit from inadvertent switching
- Double Pole Switch – all contacts are disconnected for added user safety

SEGREGATION

- Combined power and data units come pre-segregated for installation convenience

DeskPod™

Custom Designed DeskPods

The design service enables customised floorboxes to be configured and delivered to meet individual requirements.

Step 1 Choose the shroud for the DeskPod unit

Step 2 Choose the in feed option

Step 3 Does the unit require any connection to a tap-off?

Step 4 Does the unit require any protection?

Step 5 Choose the number and type of sockets required

Step 6 Choose the number and type of data modules

Step 7 Choose the end feed options

Supply Options

	Option Ref.	Description
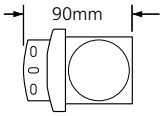	**NONE**	End cap includes 20mm diameter hole for conduit or cable gland
	PRE-WIRED TO TAP-OFF	Module can be supplied pre-wired to supply cord or powertrack tap-off
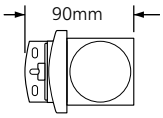	**3 POLE CONNECTOR**	Wieland GST* or Wago Winsta** standard power
	4 POLE CONNECTOR	Wieland GST* or Wago Winsta** clean earth system Dual earth conductors for compliance to High Integrity Earthing=, BS 7671:2008 IET Wiring Regulations

All end caps include fixing bracket. * Wieland GST connectors include retaining clip to minimise risk of accidental disconnection. ** Wago Winsta, Neuturik and other components available on request.

Wiring Options

Option Ref.	Description
STANDARD	Single protective conductor
CLEAN EARTH	Additional clean earth protective conductor
HIGH INTEGRITY EARTHING†	Protective conductor meets requirements for High Integrity Earthing=, BS 7671:2008 IET Wiring Regulations

† In the 17th Edition of the IET Wiring Regulations, these requirements are found in Regulation 543.7.

Circuit Protection Options

	Option Ref.	Description
	UNIT FUSE	12.5A High breaking capacity ceramic fuse to BS EN60127-2 Fuse length: 32mm Fuse diameter: 6.35mm
	MCB	16A*, Type B, Single Pole, 6kA (MK Sentry)
	RCD	16A, 30mA tripping current, Double Pole, 6kA (MK Sentry)
	RCBO	10A*, Type C, 30mA tripping current, Double Pole 6kA

* Alternative circuit protection ratings available on request. All circuit protection devices are from the MK Sentry range. RCD's do not provide overcurrent protection.

Circuit Isolation

	Option Ref.	Description
	DOUBLE POLE NEON SWITCH	Double Pole Switch with green neon, switch cover fitted as standard

* Alternative circuit protection ratings available on request. All circuit protection devices are from the MK Sentry range. RCD's do not provide overcurrent protection.

Socket Outlets – Standard

	Item	Description
	UNFUSED	Colour of socket outlet – black
	FUSED	Individually fused 3.15 or 5A*. Colour of socket outlet – black
	USB MODULE	Dual USB changing module

* For information regarding available socket and fuse options see technical page 684.

Spacers

	Item	Description
	HALF SPACER	To provide extra space for internal cable termination and capacity, extra width on the socket for transformer plugs and other adaptors
	FULL SPACER	To provide extra space for internal cable termination and capacity, extra width on the socket for transformer plugs and other adaptors
	LJU6C	Aperture size: 22.2mm x 37.6mm A range of data connectors suitable for this module are available from MK Electric
	EURO	Aperture size: 50mm x 50mm A range of Euro size data connectors suitable for this module are available from MK Electric

End Caps

	Item	Description
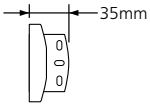	**BLANK CONDUIT ENTRY**	Solid end cap. End cap includes Ø20mm or Ø25mm cutter position holes for conduit or cable gland (used for data only module)
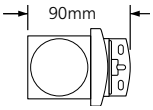	**3 POLE CONNECTOR**	Wieland GST or Wago Winsta, standard power
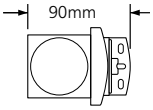	**4 POLE CONNECTOR**	Wieland GST or Wago Winsta clean earth system

† In the 17th Edition of the IET Wiring Regulations, these requirements are found in Regulation 543.7

DeskPod™

End Caps

	Part Number		Description
	Wieland GST Connector	Wago WINSTA Connector	
	DPC1120	DPC1320	Power lead 1.5mm², 13A plug to 3 Pole (female) connector 2 metres
	DPC1130	DPC1330	Power lead 1.5mm², 13A plug to 3 Pole (female) connector 3 metres
	DPC1150	DPC1350	Power lead 1.5mm², 13A plug to 3 Pole (female) connector 5 metres

End Caps

	Part Number		Description
	Wieland GST Connector	Wago WINSTA Connector	
	DPC2205	DPC4405	Interlink cable (1.5mm²,) 3 Pole connector 0.5 metre
	DPC2210	DPC4410	Interlink cable (1.5mm²,) 3 Pole connector 1 metre
	DPC3305	DPC5505	Interlink cable (1.5mm²,) 4 Pole connector 0.5 metre
	DPC3310	DPC5510	Interlink cable (1.5mm²,) 4 Pole connector 1 metre

Refer to BS 6396 where appropriate.
† In the 17th Edition of the IET Wiring Regulations, these requirements are found in Regulation 543.7

DeskPod™

Tap-off Leads

- Choose from a vast range of tap-off leads to meet installation requirements
- Alternative tap-offs available on request

DUAL USB CHARGING

ACCESS GROMMET
A range of 5" and 8" grommets are available. Please refer to page 393 - 394 for details.

Type	Pin Position	Cable / Conduit	Current Rating	Protection	3 metre** 2.5mm²	3 metre** 4.0mm²	5 metre* 2.5mm²	5 metre* 4.0mm²	Key codes†
STANDARD GREY	N2 L2 PE	LSF / LSF	13A	Fused	UT31301C		UT51301C		
		16mm	32A	Unfused		UT33201		UT53201	
		16mm	13A	Fused	UT31301		UT51301		
AUX / PHASE 1 GREEN	PE N1 L1	LSF / LSF	13A	Fused	UT31302C		UT51302C		
		16mm	32A	Unfused		UT33202		UT53202	
		16mm	13A	Fused	UT31302		UT51302		
PHASE 2 GREEN	PE N1 L2	LSF / LSF	13A	Fused	UT31310C		UT51310C		
		16mm	32A	Unfused		UT33210		UT53210	
		16mm	13A	Fused	UT31310		UT51310		
PHASE 3 GREEN	PE N1 L3	LSF / LSF	13A	Fused	UT31311C		UT51311C		
		16mm	32A	Unfused		UT33211		UT53211	
		16mm	13A	Fused	UT31311		UT51311		
ALL PHASE GREEN	PE N1 L1 L2 L3	16mm	28A	Unfused		UT33205		UT53205	
CE RED	CE N1 L1 PE	LSF / LSF	13A	Fused	UT31304C		UT51304C		
		16mm	32A	Unfused		UT33204		UT53204	
		16mm	13A	Fused	UT31304		UT51304		
DUO (RED)	CE N1 L1 N2 L2 PE	20mm	28A	Unfused		UT33206		UT53206	

4m tap-offs and other alternatives are available on request via MK Design Service, See page 16.
Tap-offs are supplied as single cables inside steel flexible conduit, except those with 'C' suffix, which are supplied with 3 or 4 core LSF flex, as appropriate.
* Unfused tap-offs in excess of 3m, can only be used on powertrack protected with a 32A (or less) circuit protection device.
** When fully stretched to ensure the conductor lengths do not exceed 3m to comply with BS 7671:2008 17th Edition IET Wiring Regulations to ensure the conduit remains flexible this is then shortened by a further 0.1 – 0.2 of slack when wired to a module.
† Key codes shown are from the perspective of the Power Track socket, the tap-off key code will be a mirror image when viewed from underneath. Add 'DE' suffix for Dual Earth High Integrity Earthing††, e.g. UT51301DE.
Unfused tap-offs – High Integrity Earthing†† as standard. Fused tap-offs – add '607' suffix for High Integrity Earthing††, e.g. UT51301607

†† In the 17th Edition of the IET Wiring Regulations, these requirements are found in Regulation 543.7.

CASE STUDY

SIR CHRIS HOY VELODROME, GLASGOW

The Sir Chris Hoy Velodrome, part of the Emirates Arena complex, is a brand new, state-of-the-art facility owned by Glasgow City Council. Opened in October 2012, the joint venue is located on a 10.5 hectare site in Dalmarnock and provides a first class venue that will inspire thousands of youngsters to follow in the footsteps of some of their favourite sport stars.

As part of the £113m development, MK Electric's Power Distribution Systems was chosen by the architect group, 3DReid, and consultant, Arup, in conjunction with the project managers to supply three main products to the site; the Onix Plus screed floorbox, the Cablelink Plus single pan raised floorbox and the DeskPod.

"Further to workshops with the design team, FES selected MK Electric as we believed their product range would be the best solution to complement the building fabric."

Chris Allen, senior operations director, FES

ONIX PLUS™

RANGE INTRODUCTION

Onix Plus™ Floorboxes and Power Grommets are a unique, innovative solution to hard floor power and data distribution requirements in screed floors with coverings such as laminate, wood, stone and marble.

Stylish and robust design offers superior load bearing performance and greater durability. Floorbox lids with snorkel or plain lid provide wet wash solutions.

Used in conjunction with the Cablelink Plus Screed Ducting System these products are ideal for reception areas, offices, airports, shopping malls and exhibition halls.

HOW TO SPECIFY

A range of 2, 3 and 4 compartment floorboxes and grommets to supply power and data services in screed floor systems. Products to be wet washable to IP44 when products are not in use and tested to EN50085-2-2 to accept 10,000N loads. Adjustable to accommodate floor covering thicknesses between 12mm and 30mm. Provision of RCD protection to support compliance to 17th Edition Wiring Regulations. Available in Aluminium, Nickel and Brass colour options.

FEATURES & BENEFITS

IP44 RATED

Wet washable and IP44 rated when not in use

TESTED TO EN 50085-2-2 TO ACCEPT 10,000N LOAD

5kN for Onix Plus Grommet

COMPLIES WITH WIRING REGULATIONS

Provision of RCD protections supports IET 17th Edition Wiring Regulations

SUPPORTS CAT 6

FLEXIBLE SOLUTION

Selection of lid recess depths available, allowing for various floor depths

WIDE RANGE OF POWER AND DATA ACCESSORIES

5 YEAR GUARANTEE

Onix Plus™

Onix Plus™ Floorbox with Snorkel Cord Outlet Lid

TESTED TO EN50085-2-2 TO ACCEPT 10,000N LOAD

SNORKEL CORD OUTLET

- Design allows access of plug tops and 16A 2P+E MK Commando Plug
- Supplied with a 9mm wide flange to cater for poorly cut tile infills

WET WASHABLE

- Plain lid and snorkel design allows floor to be washed even when in use
- The lid will withstand 10mm of standing water when in use

ATTRACTIVE, AESTHETIC LIDS

- Stylishly designed
- Recess depth options available to suit

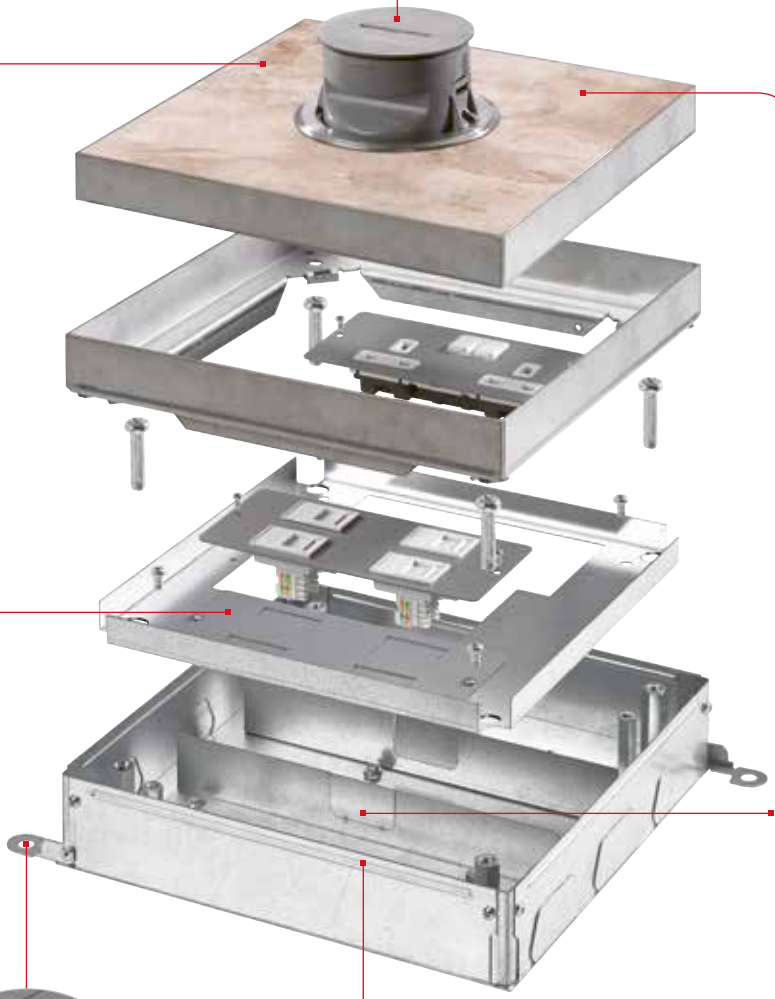

ROBUST LOAD PLATE

- Superior load bearing performance
- Ideal for areas of heavy foot traffic
- A tile lifter should be used to lift all Onix Plus lids

SQUARE BOX OPTION

- 90° rotation of floorbox for system flexibility

STAGGERED PLATE

- Provides strain relief clearance for moulded plug tops
- Stagger only available with 3 and 4 compartment floorboxes

COMPARTMENT SEGREGATION

- Set at 35mm as standard
- Height adjustable – 25 to 45mm with appropriate CUBA kit
- Deeper Screed depths have fixed wiring spaces

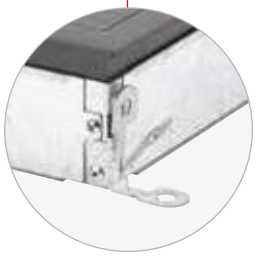

BASE FIXING FEET

- 'Fast fix' installation

SERVICE OUTLET BOX

- Option of two screed depths: 55-80mm and 80-110mm
- Deeper screed depths available on request
- Flat sided base design ensures a stronger screed solution and faster taping

DESIGNED FOR USE WITH CABLELINK PLUS SCREED SYSTEM

Onix Plus™

Onix Plus™ Boxes and Snorkel Lids

The Base Units are installed prior to screeding. Designed for use with the Cablelink Plus Screed Ducting System (see page 422 for more details). Snorkel design allows floor to be washed even when in use – IP44 when not in use, IP2 x when in use.

Onix Plus Box Selector Guide

- Service Outlet Boxes and Junction Boxes are ordered as two parts – "Base" and "Lid"
- Base – identify screed depth, number of compartments required and preferred box size
- Lid – choice of lid type, available with and without snorkel
- Junction Box – supplied complete with disposable steel screed lid and cable flyover
- Accessory Plates – select from wide range of power and data see page 423 for details
- Alternative deeper Junction Boxes and Screed Base Unit depths are available - please contact Technical Services for details

Screed Base Units: Standard

Base size Compartment	200 x 200mm 2	265 x 265mm 3	340 x 340mm 4
SCREED 55-80MM 35MM WIRING SPACE	**NXB200UK-2**	**NXB265UK-3**	**NXB340UK-4**
SCREED 80-110MM 35MM WIRING SPACE		**NXB265XUK-3**	**NXB340XUK-4**

Wiring space can also be reduced to 25mm when used in shallow screed depths. Both require the use of a plate height adjustment kit - part number CUBA-1. For 200x200mm base, use 'Compact' power and data plates only – see page 423.
Supplied with PVC ducting side plates. Number of ducting knockouts varies by size: 200 x 200mm – 2 x 60 x 25mm, 265 x 265mm – 3 x 60 x 25mm and 340 x 340mm – 3 x 90 x 35mm. see page 423 for alternative plates.
If screed depth is 55-65mm, reduce height by use of CUBA-1 and use side entry power socket outlets – see page 423.

Junction Boxes

Size	200 x 200mm	265 x 265mm	340 x 340mm
55-80MM	**NXJ200UK**	**NXJ265UK**	**NXJ340UK**
80-110MM	**NXJ200XUK**	**NXJ265XUK**	**NXJ340XUK**

Disposable steel screed lid and cable flyover supplied as standard. LIDS MUST BE ORDERED SEPARATELY.
Supplied with four side adaptor plates, 4 PVC ducting plates. Number of ducting knockout varies by size:
200x200mm – 2 x 60 x 25mm, 265 x 265mm – 3 x 60 x 25mm and 340 x 340mm – 3 x 90 x 35mm. see page 411 for alternative plates.
Increased screed depth junction boxes available on request.

Box Lid: Snorkel Lid

Size	200 x 200mm	265 x 265mm	340 x 340mm
Depth 80-110 MM			
RECESS DEPTH 15MM	**NXLS200X-15**	**NXLS265X-15**	**NXLS340X-15**
RECESS DEPTH 20MM	**NXLS200X-20**	**NXLS265X-20**	**NXLS340X-20**
RECESS DEPTH 25MM	**NXLS200X-25**	**NXLS265X-25**	**NXLS340X-25**
RECESS DEPTH 30MM	**NXLS200X-30**	**NXLS265X-30**	**NXLS340X-30**

See page 685 to determine the minimum screed depth/finished floor depth combination required to enable the snorkel lid to close.
All supplied as stainless steel lid with snorkel. Lids are supplied with frame and fittings.

Onix Plus™

Onix Plus™ Floorbox with Edge Cord Outlet Lid

TESTED TO EN50085-2-2 TO ACCEPT 10,000N LOAD

ROBUST CORD CAPS*

- Designed for improved retention

ATTRACTIVE, AESTHETIC LIDS

- Stylishly designed
- Lid options allow for various floor coverings to be used

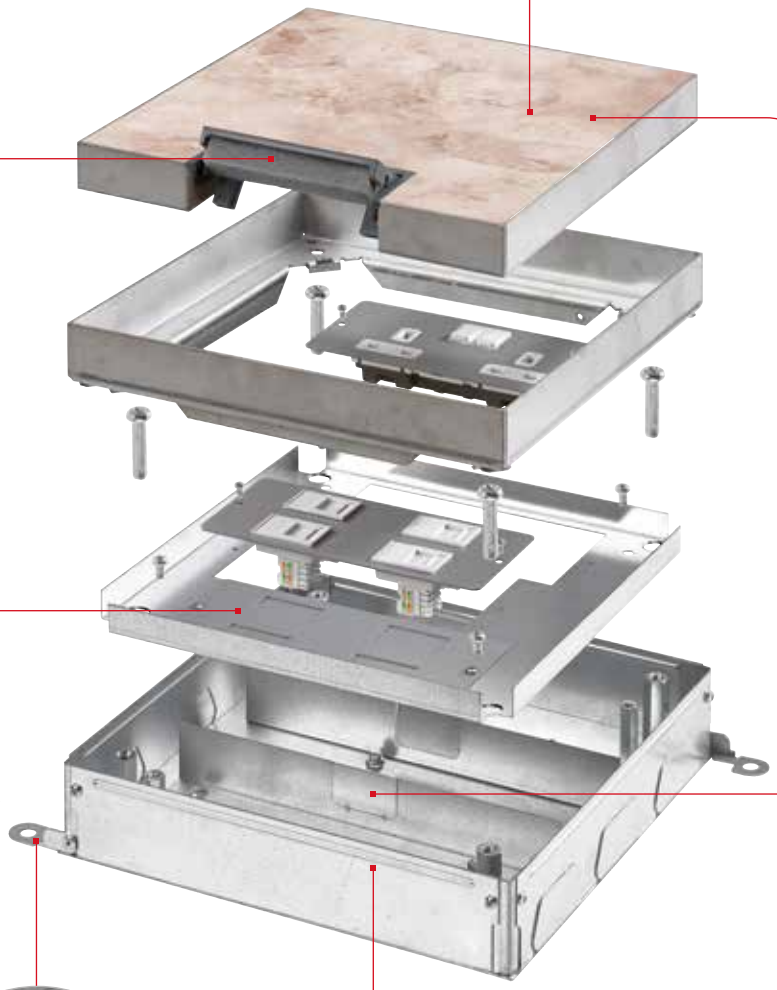

ROBUST LOAD PLATE

- Superior load bearing performance
- Ideal for areas of heavy foot traffic
- A tile lifter should be used to lift all Onix Plus lids

STAGGERED PLATE

- Provides strain relief clearance for moulded plug tops
- Stagger only available with 3 and 4 compartment floorboxes

COMPARTMENT SEGREGATION

- Set at 35mm as standard
- Height adjustable – 25 to 45mm with appropriate CUBA kit
- Deeper Screed depths have fixed wiring spaces

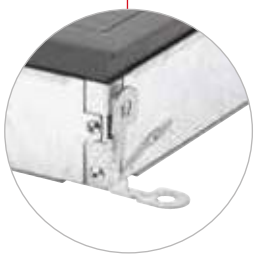

BASE FIXING FEET

- 'Fast fix' installation

OUTLET BOX

- Option of two screed depths: 55-80mm and 80-110mm
- Flat sided base design ensures a stronger screed solution and faster taping
- Deeper screed depths available on request

*Cord Outlet Lids are not suitable for Wet Wash applications.

DESIGNED FOR USE WITH CABLELINK PLUS SCREED SYSTEM

Onix Plus™

Onix Plus™ Boxes, Cord Outlet and Blank Lids

The Base Units are installed prior to screeding. Designed for use with the Cablelink Plus Screed Ducting System – see page 422 for more details. Blank Lid is suitable for wet wash applications.

Onix Plus Box Selector Guide

- Service Outlet Boxes and Junction Boxes are ordered as two parts, "Base" and "Lid"
- Junction Boxes – are supplied as a base and cable flyover
- Base – identify screed depth, number of compartments required and preferred box size
- Lid – choice of lid type. Cord Outlet Lid or Blank Lid. Cord caps must be ordered separately
- Accessory Plates – select from wide range of power and data options, see page 423 for details
- Alternative deeper Junction Boxes and Screed Base Unit depths are available - please contact Technical Services for details

Screed Base Units: Standard

Base size Compartment	200 x 200mm 2	265 x 265mm 3	340 x 340mm 4
SCREED 55-80MM 35MM WIRING SPACE	**NXB200UK-2**	**NXB265UK-3**	**NXB340UK-4**
SCREED 80-110MM 35MM WIRING SPACE		**NXB265XUK-3**	**NXB340XUK-4**

Wiring space can also be reduced to 25mm when used in shallow screed depths. Both require the use of a plate height adjustment kit – part number CUBA-1. For 200 x 200mm base, use 'Compact' power and data plates only – see page 423.
Supplied with four PVC side adaptor plates. Number of apertures varies by size: 200 x 200mm – 2 x 60 x 25mm, 265 x 265mm – 3 x 60 x 25mm and 340 x 340mm – 3 x 90 x 35mm. See page 423 for alternative plates.
If screed depth is 55-65mm, reduce wiring space to 25mm by use of suitable CUBA kit and use side entry power socket outlets – see page 423.

Junction Boxes

Size	200 x 200mm	265 x 265mm	340 x 340mm
55-80MM	**NXJ200UK**	**NXJ265UK**	**NXJ340UK**
80-110MM	**NXJ200XUK**	**NXJ265XUK**	**NXJ340XUK**

Supplied complete with a disposable steel screed lid and cable flyover as standard. LIDS MUST BE ORDERED SEPARATELY.
Supplied with four side adaptor plates, 4 x PVC ducting plates. Number of apertures varies by size:
200 x 200mm – 2 x 60 x 25mm, 265 x 265mm – 3 x 60 x 25mm and 340 x 340mm – 3 x 90 x 35mm. See page 411 for alternative plates.

Box Lids: Cord Outlet Lid

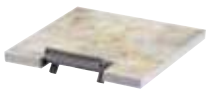

Size	200 x 200mm	265 x 265mm	340 x 340mm
Depth 55-80mm			
RECESSS DEPTH 15MM	**NXLC200-15**	**NXLC265-15**	**NXLC340-15**
RECESSS DEPTH 20MM	**NXLC200-20**	**NXLC265-20**	**NXLC340-20**
RECESSS DEPTH 25MM	**NXLC200-25**	**NXLC265-25**	**NXLC340-25**
RECESSS DEPTH 30MM	**NXLC200-30**	**NXLC265-30**	**NXLC340-30**
Depth 80-110mm			
RECESSS DEPTH 15MM	**NXLC200X-15**	**NXLC265X-15**	**NXLC340X-15**
RECESSS DEPTH 20MM	**NXLC200X-20**	**NXLC265X-20**	**NXLC340X-20**
RECESSS DEPTH 25MM	**NXLC200X-25**	**NXLC265X-25**	**NXLC340X-25**
RECESSS DEPTH 30MM	**NXLC200X-30**	**NXLC265X-30**	**NXLC340X-30**

Cord outlet lid is not suitable for wet wash applications. Supplied as stainless steel lid.
Cord caps must be ordered separately. Lids are supplied with frame and fittings.

Onix Plus™

Box Lids: Blank Lid

Size	200 x 200mm	265 x 265mm	340 x 340mm
Depth 55-80mm			
RECESSS DEPTH 15MM	**NXLB200-15**	**NXLB265-15**	**NXLB340-15**
RECESSS DEPTH 20MM	**NXLB200-20**	**NXLB265-20**	**NXLB340-20**
RECESSS DEPTH 25MM	**NXLB200-25**	**NXLB265-25**	**NXLB340-25**
RECESSS DEPTH 30MM	**NXLB200-30**	**NXLB265-30**	**NXLB340-30**
Depth 80-110mm			
RECESSS DEPTH 15MM	**NXLB200X-15**	**NXLB265X-15**	**NXLB340X-15**
RECESSS DEPTH 20MM	**NXLB200X-20**	**NXLB265X-20**	**NXLB340X-20**
RECESSS DEPTH 25MM	**NXLB200X-25**	**NXLB265X-25**	**NXLB340X-25**
RECESSS DEPTH 30MM	**NXLB200X-30**	**NXLB265X-30**	**NXLB340X-30**

Blank Lid is suitable for wet wash applications. Supplied as a stainless steel lid.
Lids are supplied with frame and fittings.

CORD CAP

Part Number	Description
NXLC-01GRY	Cord Cap – Grey (RAL 7011)
NXLC-01BEG	Cord Cap – Beige (RAL 1019)

Onix Plus™ Metal Power Grommet

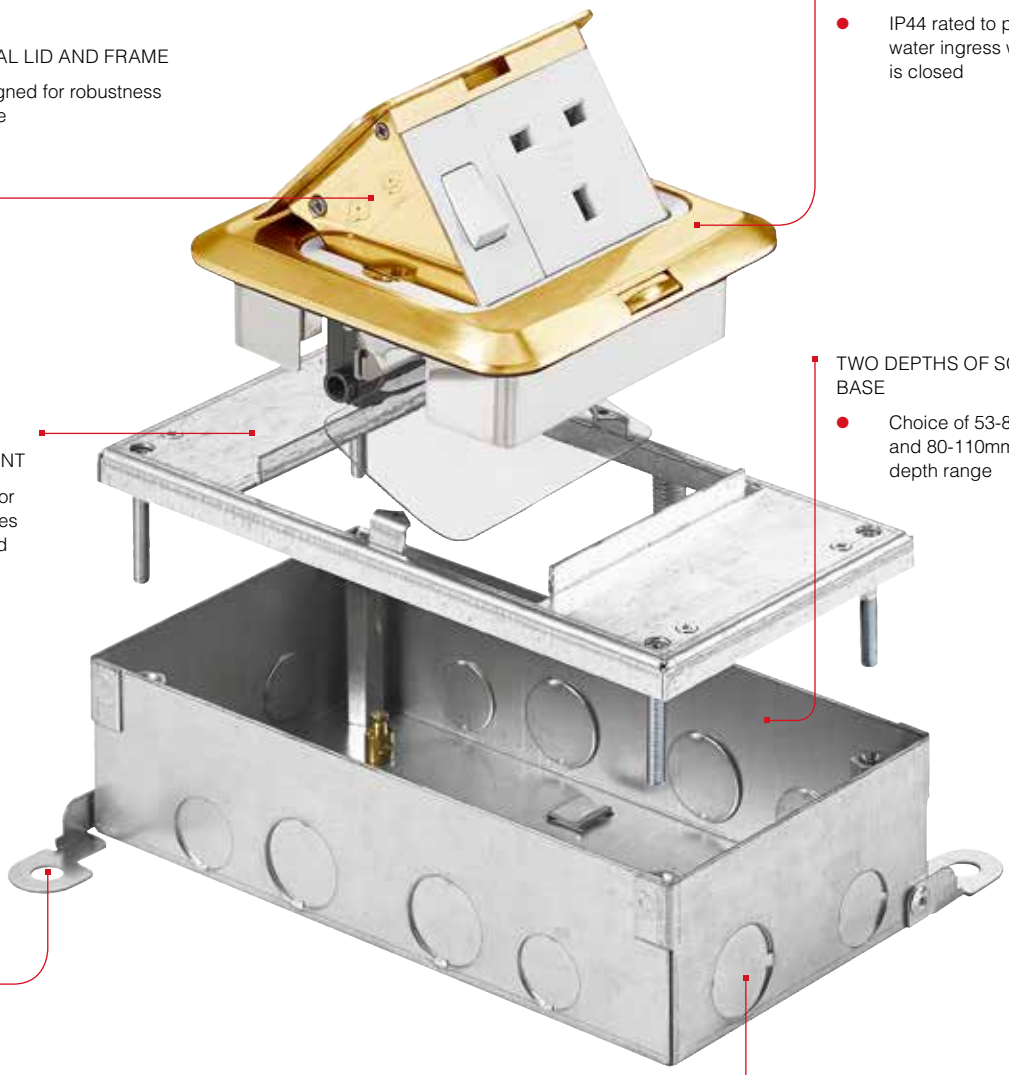

CAST METAL LID AND FRAME

- Designed for robustness in use

WET WASH SEALING GASKET

- IP44 rated to prevent water ingress when lid is closed

SIMPLE FLOOR THICKNESS ADJUSTMENT

- Accommodates floor covering thicknesses between 12mm and 30mm

TWO DEPTHS OF SCREED BASE

- Choice of 53-80mm and 80-110mm screed depth range

BASE FIXING FEET

- Fast Fix Installation

CHOICE OF KNOCKOUTS

- Provided with 6x20mm and 6x25mm

COLOUR OPTIONS

- Available in Aluminium, Nickel finish and Brass

Onix Plus™

Onix Plus™ Metal Power Grommet

The range of power grommets provide access to power in areas where standard plastic grommets are not robust enough, where improved aesthetics are required, or a wet wash solution is required.

IP44 Wet Wash

Specifically designed to seal against water ingress to IP44 when the lid is closed, allowing the floor to be washed.

Onix Plus Metal Grommet Selector Guide

- Base – select preferred base depth (use for screed floors only)
- Grommet – choose finish of unserviced grommet
- Select either switched Socket Outlet or Unserviced Data Outlet to service the grommet
- Serviced Data Grommets are available via the Design Service

Screed Base Units

Part No.	Description
NXGB100-1	Grommet Base Unit 55-80mm depth
NXGB100X-1	Grommet Base Unit 80-110mm

* A minimum finished floor thickness of 68mm is required. (Screed and floor tile thickness added together).
* Conduit entry only, not compatible with ducting.

Serviced Power Grommets*

NXGCALP

Part No.	Description
NXGCALP	13A 1G Switched Socket Outlet Grommet – Aluminium
NXGCBRP	13A 1G Switched Socket Outlet Grommet – Brass
NXGCNIP	13A 1G Switched Socket Outlet Grommet – Nickel

Socket outlets feature the MK Electric 3-pin operated safety shutter.
*Not dual earth.

Unserviced Data Grommets

MXGCALD

Part No.	Description
NXGCALD	Unserviced Grommet with 1 x 50 x 75mm Euro aperture – Aluminium
NXGCBRD	Unserviced Grommet with 1 x 50 x 75mm Euro aperture – Brass
NXGCNID	Unserviced Grommet with 1 x 50 x 75mm Euro aperture – Nickel

Accessory Plates

Accessory plates are common to most ranges, they will fit all Onix Plus™, Cablelink Plus Single Pan, and Screed floorboxes. Standard Plates are for use with 265 x 265mm, 340 x 265mm and 340 x 340mm Floorboxes. Compact Plates are for use with 200 x 200mm Floorboxes only. Both Standard and Compact Plates are supplied in Light Grey (LGY) finish.

Serviced Power Plates

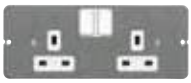
CXP10730

CXP10731NS

CXP10745

CXP10740

Standard Part No.	Compact Part No.	Description
CXP10730*†	CXPC10730*†	2G 13A Switch Socket Outlet
CXP10730NS*†	CXPC10730NS*†	2G 13A Switch Socket Outlet Non-Standard (T Pin)
CXP10731*†	CXPC10731*†	2G 13A Socket Outlet
CXP10731NS*	CXPC10731NS*	2G 13A Socket Outlet Non Standard (T Pin)
CXP10745	CXPC10745*	2G 13A Angled Socket Outlet
CXP10735*	CXPC10735	2G 13A 30mA Passive RCD Switch Socket Outlet**
CXP10760		2G 13A Switch Socket Outlet – Side Wired
CXP10720		3G 13A Socket Outlet
CXP10740	CXPC10740	2G 16A 2P+E German Socket Outlet (non UK)**

* For Clean Earth wiring – add suffix 'CE' e.g CXP10730CE. Clean Earth switched power plates are identified with red rockers.
† Plates are supplied with the MK Electric 3-pin safety shutter. Compact Plates (power and data) are for use with 200 x 200mm bases.
**Minimum 45mm wiring space required. If 2 socket plates are required in the 200 x 200 base, then only CXPC10745 / CXPC10745CE can be used.

Unserviced Data Plates

CXP20215

CXP20301

CXP30201

Standard Part No.	Compact Part No.	Description
CXP20200	CXPC20200	2 x LJU6C Apertures
CXP20201*	CXPC20201*	4 x LJU6C Apertures
CXP20215†	CXPC20215†	4 x LJU6C Wave Apertures
CXP20205	CXPC20205	4 x Krone Apertures
CXP20301	CXPC20301	6 x LJU6C Apertures
CXP30501	CXPC30501	2 x Euro 50 x 50mm Apertures
CXP30503		1 x Euro 150 x 50mm Aperture
CXP30502	CXPC30502	2 x 45 x 45mm Apertures
CXP20500†	CXPC20500†	4 x ST Fibre Connector Apertures
CXP30201	CXPC30201	Blank Plate

* Data apertures are supplied as knockouts. = Additional floor depth restrictions apply when using these plates - See page 685 for details.
Compact Plates (power and data) are for use with 200 x 200mm bases.

Optional Extras

Part No.	Description
NXLC-01GRY	Cord Cap – Grey (RAL 7011)
NXLC-01BEG	Cord Cap – Beige (RAL 1019)
CUBA-1	Plate Height Adjustment Kit +/- 10mm. Suitable for 265 x 265mm and 340 x 340mm boxes only
CX-10	Earthing Kit, pack of 10

Side Adaptor Plates

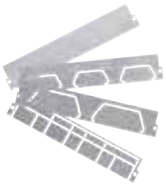

Side plate	CUBP200-01	CUBP200-02	CUBP200-03	CUBP200-04	CUBP200-08
APERTURE TYPE	BLANK BLANK	ROUND CONDUIT*	PVC	PVC	METAL DUCTING
APERTURE SIZE		25 / 20	60 / 25	90 / 35	UP TO 100X38
NO. PER PLATE		2/2	2	1	
Side plate	**CUBP265-01**	**CUBP265-02**	**CUBP265-03**	**CUBP265-04**	**CUBP265-08**
APERTURE TYPE	BLANK BLANK	ROUND CONDUIT*	PVC	PVC	METAL DUCTING
APERTURE SIZE		25 / 20	60 / 25	90 / 35	UP TO 225X38
NO. PER PLATE		3/2	3	2	
Side plate	**CUBP340-01**	**CUBP340-02**	**CUBP340-03**	**CUBP340-04**	**CUBP340-08**
APERTURE TYPE	BLANK BLANK	ROUND CONDUIT*	PVC	PVC	METAL DUCTING
APERTURE SIZE		25 / 20	60 / 25	90 / 35	UP TO 300X38
NO. PER PLATE		4/4	4	3	

see page 421 for information regards PVCu ducting, see page 422 for metal ducting. * Knockouts 20mm and 25mm.

CASE STUDY

THE CO-OPERATIVE GROUP HEADQUARTERS, MANCHESTER

When The Co-operative Group set about identifying a site to replace its city centre estate the challenge lied in erecting a flexible and future-proofed building that could accommodate a mobile and dynamic working style, without compromising aesthetics.

To meet The Group's needs, MK Electric supplied 89 Onix Plus™ Floorboxes and Power Grommets with snorkel lids, and 21 of the same solution with blank lids.

"From the design and construction of the building, to the electrical components used and management of the project, One Angel Square sets a new international benchmark in sustainable design within the commercial sector and is widely acknowledged as one of the most sustainable large office spaces in Europe. The new head office also benefits from MK Electric's innovative floorbox solution which will allow our business to be as flexible as possible as our building and layout needs change and evolve."

David Pringle, Director of NOMA

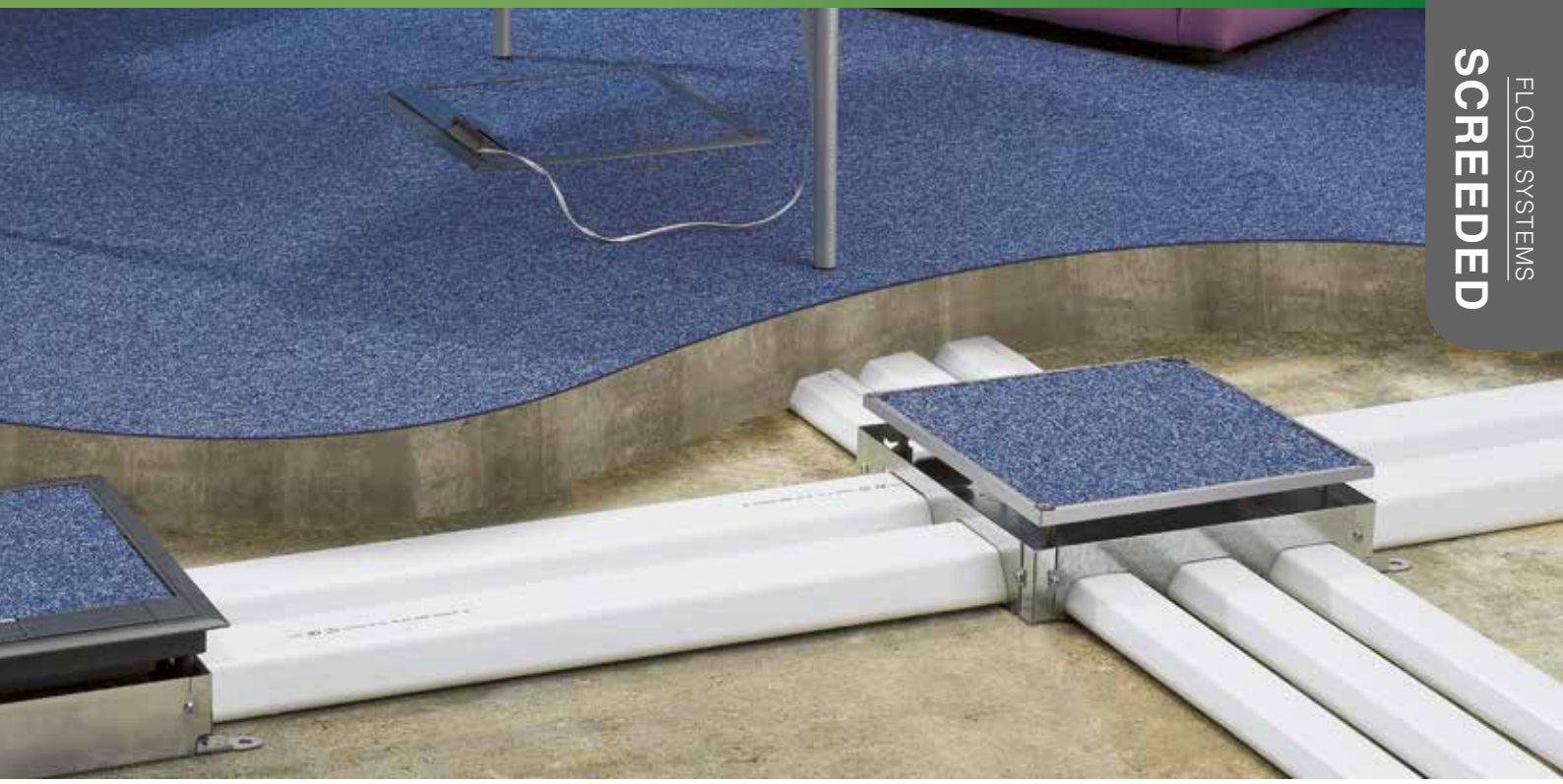

CABLELINK PLUS SCREED SYSTEM

RANGE INTRODUCTION

Cablelink Plus Screed System provides adaptable power and data distribution highways in screed floors.

Specifically designed to offer superior load bearing performance and greater robustness.

The Screed System consists of Service Outlet Boxes, Junction Boxes, Vertical Access Boxes, PVCu and Metal Ducting. These can be used together to provide a complete layout in floors with an overall finished floor depth as low as 64mm.

HOW TO SPECIFY

A power and data distribution system designed for use in screed floors consisting of outlet boxes, junction boxes, access boxes PVCu and Metal ducting. All product to be suitable to fit in screeded depths of 55mm to 110mm and tested to comply to EN50085-2-2. One, Two, Three and Four compartment floorbox products to be available with self closing lids and and wide provision of RCD protection to support compliance to 17th Edition Wiring Regulations. All products to designed to support Cat 6 structured cabling systems.

FEATURES & BENEFITS

TESTED TO EN 50085-2-2 TO ACCEPT 5000N LOAD

CAT 6 & CAT 6A COMPLIANT

FLEXIBLE SOLUTION

Choice of 1, 2, 3 or 4 compartment floorboxes

SUITABLE FOR SCREEDED DEPTH FROM 55MM TO 110MM

COMPLIES WITH WIRING REGULATIONS

Provision of RCD protections supports IET 17th Edition Wiring Regulations. Floorboxes are IP2X rated in accordance with BS EN 50085-1

SELF-CLOSING LID

In compliance with IEC 61534-22

PVCu DUCTING MANUFACTURED FROM 100% RECYCLED MATERIAL*

WIDE RANGE OF POWER AND DATA ACCESSORIES

5 YEAR GUARANTEE

*Based on 2014 consumption

Screed System

TESTED TO EN50085-2-2 TO ACCEPT 5000N LOAD

DUCTING

- Choice of PVCu or metal
- PVCu ducting sizes: 90 x 35mm and 60 x 25mm
- PVCu ducting manufactured from 100% recycled material

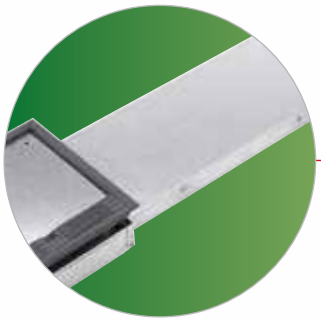

OUTLET BOX COLOUR

- Grey (RAL 7011)

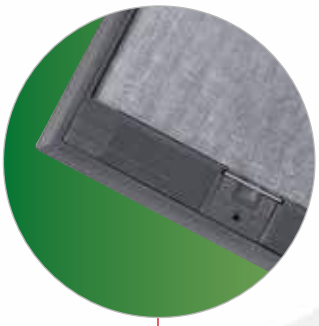

LID OPENING TO 80°

- Self closing lid in accordance with IEC 61534-22

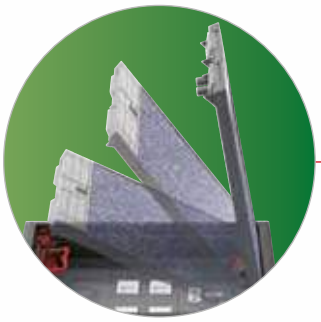

STAGGERED PLATES

- Provides strain relief clearance for moulded plugs
- Stagger only available with 3 and 4 compartment floorboxes

OUTLET BOX

- Option of two screed depth variants: 55-80mm and 80-110mm
- Flat side base design ensures a stronger screed solution and faster taping
- Optional 10mm plate height adjustment kit for increased wiring space to support Cat 6 and Cat 6A compliance
- Deeper screed depths available on request
- Deeper screed depths have fixed wiring spaces
- IP2X rated in accordance with BS EN 50085-1

Screed System

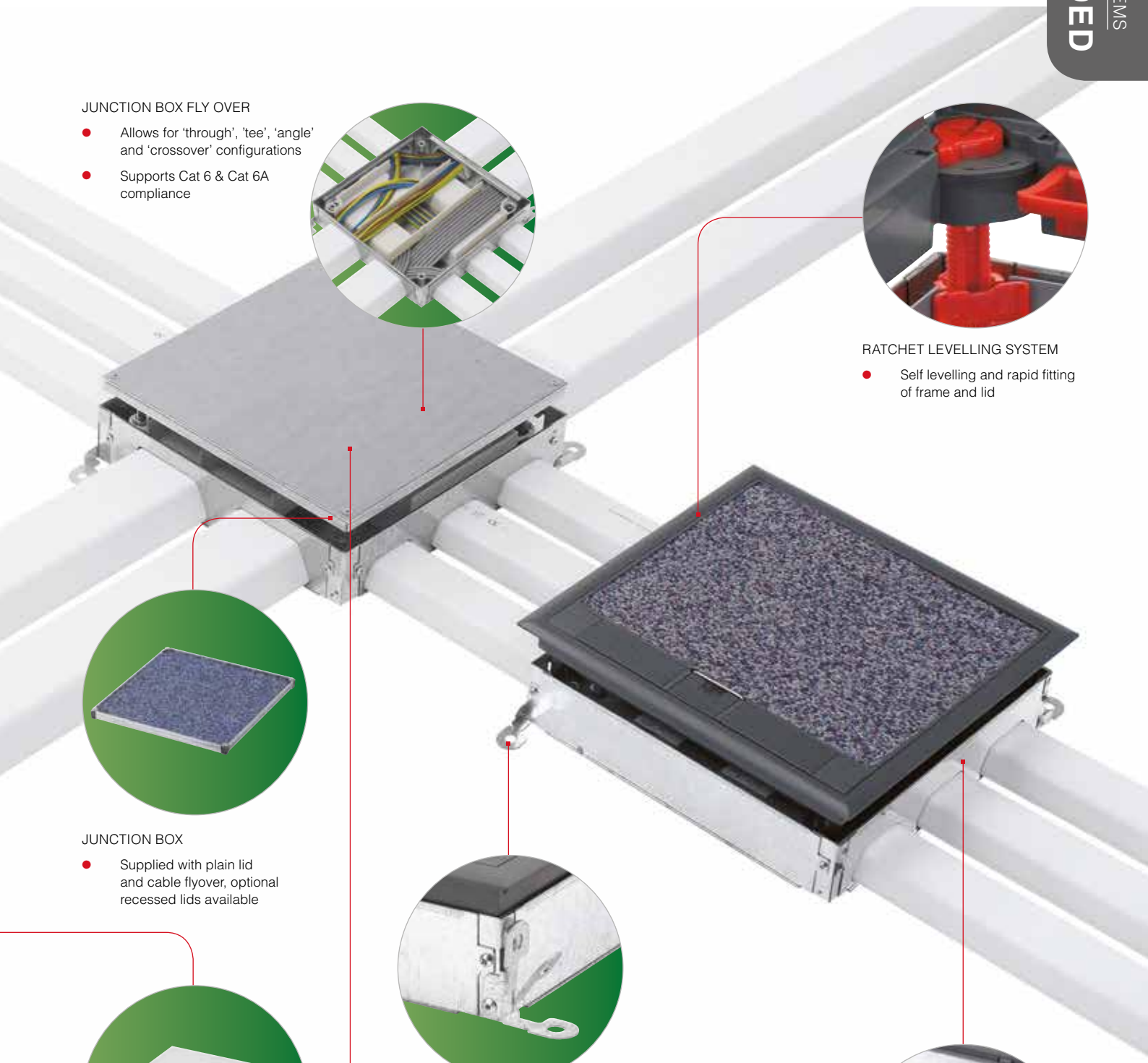

JUNCTION BOX FLY OVER

- Allows for 'through', 'tee', 'angle' and 'crossover' configurations
- Supports Cat 6 & Cat 6A compliance

RATCHET LEVELLING SYSTEM

- Self levelling and rapid fitting of frame and lid

JUNCTION BOX

- Supplied with plain lid and cable flyover, optional recessed lids available

BASE FIXING FEET

- Fast fix installation

SIDE ADAPTOR PLATE OPTIONS

- Selection of side plates to suit PVCu or metal ducting

DISPOSABLE STEEL SCREEDING LID

- Supplied with all Cablelink Plus Screed Floorboxes
- Recyclable

Screed System

Service Outlet Box

TESTED TO EN 50085-2-2 TO ACCEPT 5000N LOAD

ROBUST CORD CAPS

- Designed to improve retention

HANDLE

- Designed for improved accessibility

OPTIONAL CABLE RETAINERS

- Acts as cable tidy to prevent cables being trapped

LID

- Simple carpet cut out
- 8mm or 12mm (metal lid and trim) recessed lids available
- Can be hinged from either of two sides

OPTIONAL LOCKABLE LID

- Added security when not in use

* SQUARE BOX OPTION

- 90° rotation of floorbox for system flexibility

RATCHET LEVELLING SYSTEM

- Self levelling and rapid fitting of frame and lid

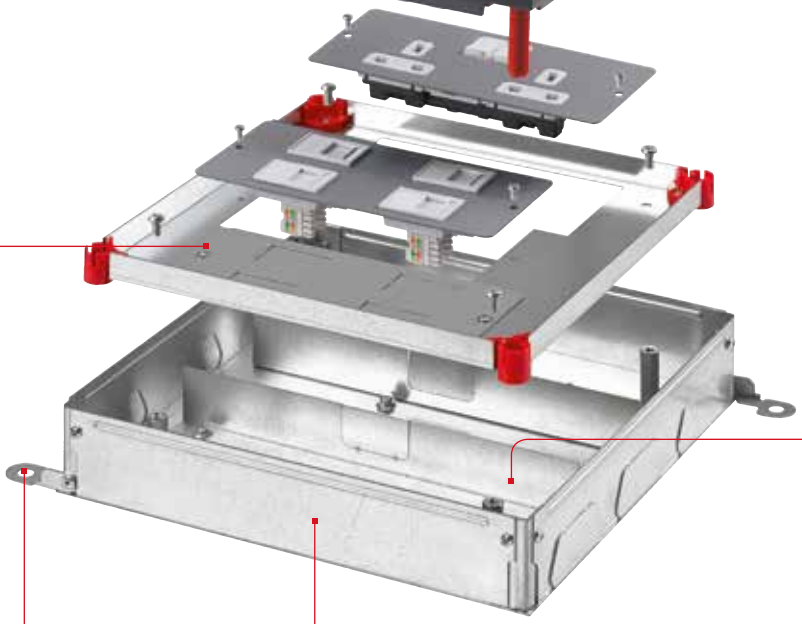

STAGGERED PLATE

- Provides strain relief clearance for moulded plug tops
- Stagger only available with 3 and 4 compartment floorboxes

OPTIONAL LID TETHER

- Added security
- Eliminates lid losses

COMPARTMENT SEGREGATION

BASE FIXING FEET

- Fast fix installation

OUTLET BOX

- Option of two screed depths: 55-80mm and 80-110mm.
- Deeper screed depths available on request.
- Flat sided base design ensures a stronger screed solution and faster taping
- Optional 10mm plate height adjuster kit for greater screed depths to support Cat 6 & Cat 6A compliance
- IP2X rated in accordance with BS EN 50085-1

* Only applicable for 200 x 200mm & 265 x 265mm floorbox.

Screed System

Screed Outlet Boxes

The Service Outlet Box should be positioned directly on the structural floor slab. The box provides location and connection facilities for power and data service outlets.

Service Outlet Box Selector Guide

- Service Outlet Boxes are ordered as two parts – "Base" and "Frame and Lid"
- Base – identify screed depth, number of compartments required and preferred box size
- Frame and Lid – choose trim colour and lid recess depth
- Side Adaptor Plates – choose alternative to PVC ducting plates if required
- Accessory Plates – select from wide range of power and data options – see page 423

Base

Base size Compartment	100 x 200MM* 1	200 x 200MM 2	265 x 265MM 3	340 x 265MM 4
SCREED 55-80MM 35MM WIRING SPACE	CUB100UK-1	CUB200UK-2	CUB265UK-3	CUB340UK-4
SCREED 80-110MM 35MM WIRING SPACE	CUB100XUK-1	CUB200XUK-2	CUB265XUK-3	CUB340XUK-4

Increased wiring space of 45mm below the plate is required to achieve Cat 6 & Cat 6A compliance. Wiring space can also be reduced to 25mm when used in shallow screed depths. Both require the use of a plate height adjustment kit - part number CUBA-1.
Disposable steel screed lid (recyclable) supplied as standard. If screed depth is 55mm, reduce wiring space to 25mm by use of suitable CUBA kit, floor covering must be 8mm thick when compressed, and use side wired socket outlets – see page 423. Supplied with 4 x PVC Ducting side plates. Number of knockouts varies by size: 100 x 200mm – 1 x 60 x 25mm, 265 x 265mm – 3 x 60 x 25mm and 340 x 265mm – 3 x 90 x 35mm. *These boxes will only accept CXP10745

Frames and Lid

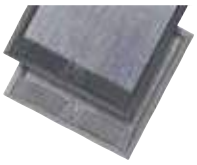

Frame/Lid Size	100 X 200MM	200 X 200MM	265 X 265MM	340 X 265MM
RECESS: 8MM	CXL100-8GRY	CXL200-8GRY*	CXL265-8GRY*	CXL340-8GRY*
RECESS: 12MM**		CXL200-12GRY	CXL265-12GRY	CXL340X-12GRY

* Lockable option available – add suffix 'L' e.g CXL265-8GRYL. Floorboxes must never be locked whilst in use. Not supplied with key.
An optional 2mm lid packer is available when used with thinner carpet tiles – see Optional Extras below.
If a 12mm lid is required for use in 80-110mm screed, please add 'X' e.g. CXL265X-12GRY.
** For 12mm recess depth lids use Onix Plus™ base, see page 405 i.e NXB265UK-3.

Side Adaptor Plates

Side plate	CUBP200-01	CUBP200-02	CUBP200-03	CUBP200-04	CUBP200-08
APERTURE TYPE	BLANK BLANK	ROUND CONDUIT*	PVC	PVC	METAL DUCTING
APERTURE SIZE (MM)		25 / 20	60 / 25	90 / 35	UP TO 100X38
NO. PER PLATE		2/2	2	1	
Side plate	**CUBP265-01**	**CUBP265-02**	**CUBP265-03**	**CUBP265-04**	**CUBP265-08**
APERTURE TYPE	BLANK BLANK	ROUND CONDUIT*	PVC	PVC	METAL DUCTING
APERTURE SIZE (MM)		25 / 20	60 / 25	90 / 35	UP TO 225X38
NO. PER PLATE		3/2	3	2	
Side plate	**CUBP340-01**	**CUBP340-02**	**CUBP340-03**	**CUBP340-04**	**CUBP340-08**
APERTURE TYPE	BLANK BLANK	ROUND CONDUIT*	PVC	PVC	METAL DUCTING
APERTURE SIZE (MM)		25 / 20	60 / 25	90 / 35	UP TO 300X38
NO. PER PLATE		4/4	4	3	

See page 421 for information regards PVCu ducting, page 422 for metal ducting. * Knockouts 20mm and 25mm.

Optional Extras

LID TETHER

Part No.	Description
CX-01	Cable Retainers – pack of 10
CX-02	Lid Tether Kit – pack of 5
CX-03GRY	Cord Cap for 100 x 200mm Lid – Grey
CX-04GRY	Cord Cap for 265 x 265 and 340 x 265mm Lid – Grey
CX-05	Ratchet levelling kit
CUBA-1	Plate Height Adjustment Kit +/- 10mm. Suitable for 265 x 265mm and 340 x 265mm boxes only
CRXKEY	Lock Key – pack of 2

Screed System

Junction Box

TESTED TO EN50085-2-2 TO ACCEPT 5000N LOAD

CHOICE OF JUNCTION BOX LID

- Supplied with a plain lid, optional recessed lids available

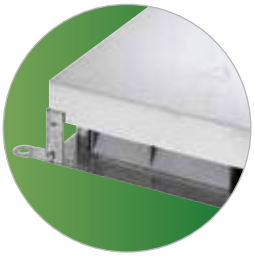

DISPOSABLE STEEL SCREEDING LID

- Supplied with all Cablelink Plus Screed Floorboxes
- Recyclable

JUNCTION BOX FLY OVER

- Allows for 'through,' tee,' 'angle' and 'crossover' configurations
- Supports Cat 6 & Cat 6A compliance

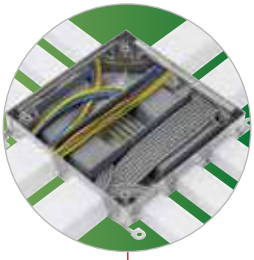

OPTIONAL RECESSED LID

- Simple carpet cut out

BASE FIXING FEET

- Fast fix installation

JUNCTION BOX

- Option of two screed depth variants: 55-80mm and 80-110mm.
- Deeper screed depths available on request.
- Flat side base design ensures a stronger screed solution and faster taping
- Supplied with cable flyover
- IP2X rated in accordance with BS EN 50085-1

Screed System

Junction Boxes

The Junction Box should be positioned directly on the structural floor slab. The box provides access to cables at the intersection of ducting runs or changes of direction. The ducting forms a system of tunnels to segregate services within the junction box.

Junction Box Selector Guide

- Junction Boxes are supplied as a base, lid and cable flyover as standard
- Lid – supplied complete as a plain flat lid as standard
- Alternative deeper Junction Boxes are available – please contact Technical Services for details

Junction Box

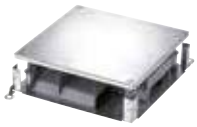

Depth/Base Size	200 X 200MM	265 X 265MM	340 X 340MM
55-80MM	CUJ200UK	CUJ265UK	CUJ340UK
80-110MM	CUJ200XUK	CUJ265XUK	CUJ340XUK

Supplied complete with a plain flat lid, disposable steel screed lid and cable flyover as standard.
Supplied with four side adaptor plates, 4 x PVC ducting plates – number of ducting knockouts varies by size:
265 x 265mm – 3 x 60 x 25mm and 340 x 340mm – 3 x 90 x 35mm. See below for alternative plates.

Recessed Lid and Frame

Recess/Base Size	200 X 200MM	265 X 265MM	340 X 340MM
Depth 53-80MM			
RECESS DEPTH 8MM	CUJL200-8GRY	CUJL265-8GRY	CUJL340-8GRY
RECESS DEPTH 12MM	CUJL200-12GRY	CUJL265-12GRY	CUJL340-12GRY
Depth 80-110MM			
RECESS DEPTH 8MM	CUJL200X-8GRY	CUJL265X-8GRY	CUJL340X-8GRY
RECESS DEPTH 12MM	CUJL200X-12GRY	CUJL265X-12GRY	

Supplied as a recessed lid to accept floor covering.

Side Adaptor Plates

Side plate	CUBP200-01	CUBP200-02	CUBP200-03	CUBP200-04	CUBP200-08
APERTURE TYPE	BLANK BLANK	ROUND CONDUIT*	PVC	PVC	METAL DUCTING
APERTURE SIZE		25 / 20	60 / 25	90 / 35	UP TO 100X38
NO. PER PLATE		2/2	2	1	

Side plate	CUBP265-01	CUBP265-02	CUBP265-03	CUBP265-04	CUBP265-08
APERTURE TYPE	BLANK BLANK	ROUND CONDUIT*	PVC	PVC	METAL DUCTING
APERTURE SIZE		25 / 20	60 / 25	90 / 35	UP TO 225X38
NO. PER PLATE		3/2	3	2	

Side plate	CUBP340-01	CUBP340-02	CUBP340-03	CUBP340-04	CUBP340-08
APERTURE TYPE	BLANK BLANK	ROUND CONDUIT*	PVC	PVC	METAL DUCTING
APERTURE SIZE		25 / 20	60 / 25	90 / 35	UP TO 300X38
NO. PER PLATE		4/4	4	3	

See page 421 for information regards PVCu ducting, page 422 for metal ducting.
* Knockouts 20mm and 25mm.

Screed System

Vertical Access Boxes

The Vertical Access Box provides draw-in facilities to allow for a change of plane or direction of the ducting and connection to skirting trunking systems, distribution boards, boxes etc.

- Conduit or ducting can be run vertically or horizontally from the box

Vertical Access Boxes – for PVC Ducting

List No.	Type	List No.	Type
Shallow Access		**Full Access**	
SF88152	TWIN	**SF88172**	TWIN
SF88153	TRIPLE	**SF88173**	TRIPLE

When using VAB with 2 or 3 compartment trunking, the full access version of the VAB should be used to give maximum accessibility.
If using 60 x 25mm ducting, the ducting can be joined into the box using SF88150

Cover Plates – for Vertical Access Boxes (PVC Ducting)

List No.	Type	List No.	Type
Overlapping Shallow Access		**Flush Shallow Access**	
SF88180	TWIN	**SF88176**	TWIN
SF88181	TRIPLE	**SF88177**	TRIPLE
Overlapping Shallow Access		**Flush Shallow Access**	
SF88188	TWIN	**SF88184**	TWIN
SF88189	TRIPLE	**SF88185**	TRIPLE

Vertical Access Boxes – for Metal Ducting

Box Size	265MM	340MM
VERTICAL ACCESS BOX	**CUV265UK-2**	**CUV340UK-3**

Supplied with flush cover plate and Metal Ducting side adaptor plate:
265mm box = CUBP265-08, 340mm box = CUBP340-08. CUV boxes are supplied 3 compartment and can be easily converted to 2 compartment on site.

Spares

Box Size	265MM	340MM
OVERLAPPING COVER PLATES	**CUVP265**	**CUVP340**

Supplied as singles.

Screed System

Ducting and Accessories

The ducting is intended primarily for installation within the floor screed thickness, but it can also be cast direct into the structural slab, attached to the soffit with access through from the floor above or used for vertical service risers.

- Underfloor ducting is available in two sizes, 90mm x 35mm and 60mm x 25mm. Comes in 12 metre packs and is white in colour.

PVCu Ducting

	3M lengths
60 X 25MM	**SF88200**
90 X 35MM	**SF88100**

Ducting Bends

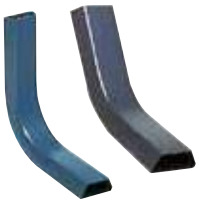

Part No.	Ducting System	Angle	Mean Centre Line Radius
PVCu ducting horizontal bends			
SF88144	**SF88100**	90º	465mm
SF88145	**SF88100**	45º	465mm
SF88248	**SF88200**	90º	450mm
SF88249	**SF88200**	45º	450mm
PVCu ducting vertical bends			
SF88142	**SF88100**	90º	100mm
SF88143	**SF88100**	45º	100mm
SF88246	**SF88200**	90º	95mm
SF88247	**SF88200**	45º	95mm

Ducting Bends require the jointing sleeve to connect to the ducting.

Accessories

Part No.	Description
SF88106	Jointing Sleeve (SF88100). Pack of 5
SF88206	Jointing Sleeve (SF88200). Pack of 5
CUFC60-2	2 Compartment Fixing Clip (SF88200). Pack of 10
CUFC60-3	3 Compartment Fixing Clip (SF88200). Pack of 10
SF88116	2 Compartment Fixing Clip (SF88100). Pack of 10
SF88117	3 Compartment Fixing Clip (SF88100). Pack of 10
SF88105	Conduit entry adaptor for PVC ducting VAB's. Pack of 5
SF88107	Ducting Adaptor. Pack of 5
SF88150	Duct Reducer. Pack of 5

Screed System

Metal Ducting System

Metal Ducting Systems are offered as an alternative to PVCu systems.

- Provide greater cable protection
- Provides EMC Screening
- Manufactured from pre-galvanised sheet steel

Metal Ducting

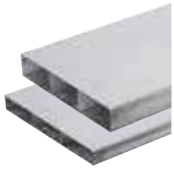

Ducting Width	100MM	225MM	225MM	250MM	275MM	300MM
Compartment	1	2	3	3	3	3
Ducting Height						
38MM	CUD100-38-1	CUD225-38-2	CUD225-38-3	CUD250-38-3	CUD275-38-3	CUD300-38-3

Supplied in lengths of 2.44m.

Joint Sleeves

Ducting Width	100MM	225MM	250MM	275MM	300MM
Ducting Height					
38MM	CUDJ100-38	CUDJ225-38	CUDJ250-38	CUDJ275-38	CUDJ300-38

Fixing Clips

Ducting Width	100MM	225MM	250MM	275MM	300MM
Ducting Height					
38MM	CUDF100-38	CUDF225-38	CUDF250-38	CUDF275-38	CUDF300-38

Side Adaptor Plates

Side plate	CUBP200-01	CUBP200-02	CUBP200-03	CUBP200-04	CUBP200-08
APERTURE TYPE	BLANK BLANK	ROUND CONDUIT*	PVC	PVC	METAL DUCTING
APERTURE SIZE (MM)		25 / 20	60 / 25	90 / 35	UP TO 100X38
NO. PER PLATE		2/2	2	1	

Side plate	CUBP265-01	CUBP265-02	CUBP265-03	CUBP265-04	CUBP265-08
APERTURE TYPE	BLANK BLANK	ROUND CONDUIT*	PVC	PVC	METAL DUCTING
APERTURE SIZE (MM)		25 / 20	60 / 25	90 / 35	UP TO 225X38
NO. PER PLATE		3/2	3	2	

Side plate	CUBP340-01	CUBP340-02	CUBP340-03	CUBP340-04	CUBP340-08
APERTURE TYPE	BLANK BLANK	ROUND CONDUIT*	PVC	PVC	METAL DUCTING
APERTURE SIZE (MM)		25 / 20	60 / 25	90 / 35	UP TO 300X38
NO. PER PLATE		4/4	4	3	

See page 421 for information regards PVCu ducting, page 422 for metal ducting.
* Knockouts 20mm and 25mm.

Screed System

Accessory Plates

Accessory plates are common to most ranges, they will fit all Cablelink Plus Single Pan, Screed and Onix Plus™ floorboxes. Standard Plates are for use with 100 x 200mm, 265 x 265mm and 340 x 265mm floorboxes. Standard Plates are supplied in Light Grey (LGY) finish.

Serviced Power Plates

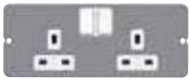
CXP10730

CXP10745

CXP10735

Standard Part No.	Compact Part No.	Description
CXP10730*†	CXPC10730*†	2G 13A Switch Socket Outlet
CXP10730NS*†	CXPC10730NS*†	2G 13A Switch Socket Outlet Non-Standard (T Pin)
CXP10731*†	CXPC10731*†	2G 13A Socket Outlet
CXP10731NS*	CXPC10731NS*	2G 13A Socket Outlet Non-Standard (T Pin)
CXP10745	CXPC10745*	2G 13A Angled Socket Outlet – Power plate for CUB100
CXP10735*	CXPC10735	2G 13A 30mA Passive RCD Switch Socket Outlet**
CXP10760		2G 13A Switch Socket Outlet – Side Wired (single earth)
CXP10720		3G 13A Socket Outlet
CXP10740	CXPC10740	2G 16A 2P+E German Socket Outlet (non UK)**

* For Clean Earth wiring – add suffix 'CE' e.g CXP10730CE. Clean Earth switched power plates are identified with red rockers, unswitched with red sockets.
† Plates are supplied with the MK Electric 3-pin safety shutter. Compact Plates (power and data) are for use with 200 x 200mm bases only.
If 2 socket plates or a socket plate and wave plate are to be used then only CXP10745 and CXPC10745 socket plate can be used.
**requires a 45mm wiring space.

Unserviced Power Plates

Standard Part No.	Description
CXP20106	1G Accessory Plate with 60.3mm fixing centres
CXP20107*	2G accessory Plate with 120.6mm fixing centres

* Recommend that a MK Electric Aspect, Edge or Logic Plus Socket Outlet is used. Can only be used in 4 module floorboxes.

Unserviced Data Plates

CXP20201

CXP20215

CXP20301

CXP30201

Standard Part No.	Compact Part No.	Description
CXP20200	CXPC20200	2 x LJU6C Apertures
CXP20201*	CXPC20201*	4 x LJU6C Apertures
CXP20215	CXPC20215	4 x LJU6C Wave Apertures
CXP20205	CXPC20205	4 x Krone Apertures
CXP20301	CXPC20301	6 x LJU6C Apertures
CXP30501	CXPC30501	2 x Euro 50 x 50mm Apertures
CXP30503		1 x Euro 150 x 50mm Aperture
CXP30502	CXPC30502	2 x 45 x 45mm Apertures
CXP20500	CXPC20500	4 x ST Fibre Connector Apertures
CXP30201	CXPC30201	Blank Plate

* Data apertures are supplied as knockouts.
Additional floor restrictions apply when using these plates - see page 411 for details.
Compact Plates (power and data) are for use with 200 x 200mm bases

Screed System

Screed System Product Selection Table

SCREED OUTLET BOX					
Base Size		**100 x 200 mm**	**200 x 200 mm**	**265 x 265 mm**	**340 x 265 mm**
Number of Compartments		**1**	**2**	**3**	**4**
BASE	55-80mm	**CUB100UK-1**	**CUB200UK-2**	**CUB265UK-3**	**CUB340UK-4**
	80-100mm	**CUB100XUK-1**	**CUB200XUK-2**	**CUB265XUK-3**	**CUB340XUK-4**
LID & FRAME	8mm RECESS	**CXL100-8GRY**	**CXL200-8GRY**	**CXL265-8GRY**	**CXL340-8GRY**
ADAPTOR PLATE SIZE		N/A	200	265	340
SIDE PLATES AS STD		N/A	2 X CUBP200-03	2 X CUBP265-03	2 X CUBP340-04
NO. / TYPE OF APERTURE ON SIDE PLATE		20 & 25MM CONDUIT DIRECTLY INTO BASE UNIT	2 X PVC 60X25mm	3 X PVC 60 X 25mm	3 X PVC 90 X 35mm
OPTIONAL SIDE PLATE ADAPTORS		N/A	**CUBP200-01**	**CUBP265-01**	**CUBP340-01**
		N/A	**CUBP200-02**	**CUBP265-02**	**CUBP340-02**
		N/A	**CUBP200-03**	**CUBP265-03**	**CUBP340-03**
		N/A	**CUBP200-04**	**CUBP265-04**	**CUBP340-04**
		N/A	N/A	**CUBP265-08**	**CUBP340-08**

JUNCTION BOX				
Base Size		**200 x 200 mm**	**265 x 265 mm**	**340 x 340 mm**
Number of Compartments		**2**	**3**	**4**
BASE	55-80mm	**CUJ200UK**	**CUJ265UK**	**CUJ340UK**
	80-110mm	**CUJ200XUK**	**CUJ265XUK**	**CUJ340XUK**
JUNCTION BOX FLY OVER INCLUDED		2 WAY	3 WAY	3 WAY
LID SUPPLIED AS STANDARD		PLAIN FLAT	PLAIN FLAT	PLAIN FLAT
LID OPTIONS AVAILABLE				
DEPTH 55-80mm	8mm RECESS	**CUJL200-8**	**CUJL265-8**	**CUJL340-8**
	12mm RECESS	**CUJL200-12**	**CUJL265-12**	**CUJL340-12**
DEPTH 80-110mm	8mm RECESS	**CUJL200X-8**	**CUJL265X-8**	**CUJL340X-8**
	12mm RECESS	**CUJL200X-12**	**CUJL265X-12**	**CUJL340X-12**
ADAPTOR PLATE SIZE		200	265	340
SIDE PLATES AS STANDARD		4 X CUBP200-003	4 x CUBP265-03	4 x CUBP340-04
NO. / TYPE OF APERTURE ON SIDE PLATE		2 X PVC 60 X 25MM	3 X PVC 60 X 25MM	3 X PVC 90 X 35mm
OPTIONAL SIDE PLATE ADAPTORS		**CUBP200-01**	**CUBP265-01**	**CUBP340-01**
		CUBP200-02	**CUBP265-02**	**CUBP340-02**
		CUBP200-03	**CUBP265-03**	**CUBP340-03**
		CUBP200-04	**CUBP265-04**	**CUBP340-04**
			CUBP265-08	**CUBP340-08**

VERTICAL ACCESS BOX	METAL DUCTING	
Size	**265mm**	**340mm**
No of Compartments	**2**	**3**
VERTICAL ACCESS BOX	**CUV265**	**CUV340**
COVER PLATES AS STANDARD	**FLUSH**	**FLUSH**
COVER PLATES OPTIONAL	**CUVP265**	**CUVP340**

VERTICAL ACCESS BOX	PVCu DUCTING			
Size	**Shallow**		**Full Access**	
Number of Compartments	**2**	**3**	**2**	**3**
VERTICAL ACCESS BOX	**SF88152**	**SF88153**	**SF88172**	**SF88173**
COVER PLATES - OVERLAPPING	**SF88180**	**SF88181**	**SF88188**	**SF88189**
COVER PLATES - FLUSH	**SF88176**	**SF88177**	**SF88184**	**SF88185**

INTERACT OVERHEAD POWER

RANGE INTRODUCTION

Interact Overhead Power System is a powertrack catering for single, 3 phase or dual circuit applications suitable for standard, permanent live, uninterrupted or dedicated power supply up to 480V.

Interact is fast and simple to install and has the additional benefit of all standard tap-offs being designed to be 'fail safe' should any incompatible track/tap-off connections be made.

HOW TO SPECIFY

A 40A overhead powertrack system to cater for single , three phase or dual circuit applications. Snap fast crocodile joints to ensure fast and simple installation with provision for 300mm socket spacing's. Key and colour coded tap-offs and sockets used to prevent cross pole contamination. Snap fix suspension brackets to enable fast and simple installation without additional fitting tools.

FEATURES & BENEFITS

PATENTED 'SNAP FAST' CROCODILE JOINTS
Ensures fast and simple installation

STRONG, RIGID BUT LIGHTWEIGHT DESIGN
Enables greater spans between fixing brackets for quick and easy installation

KEY CODED AND COLOUR CODED TAP-OFFS
Provides mechanical protection against cross pole contamination

COMPLIES WITH WIRING REGULATIONS
Complies with both the requirements of BS EN 61534 and BS 7671:2014 IET Wiring Regulations (17th Edition)

AVAILABLE IN 40A

5 YEAR GUARANTEE

Interact Overhead Power

OVERHEAD POWER TRACK

- Strong and rigid construction to guarantee a robust installation and secure track and fittings suspension
- Lightweight structure enabling a faster installation and easier handling on site
- Available in a choice of 2m and 4m lengths to suit
- 500mm socket outlet pitch as standard

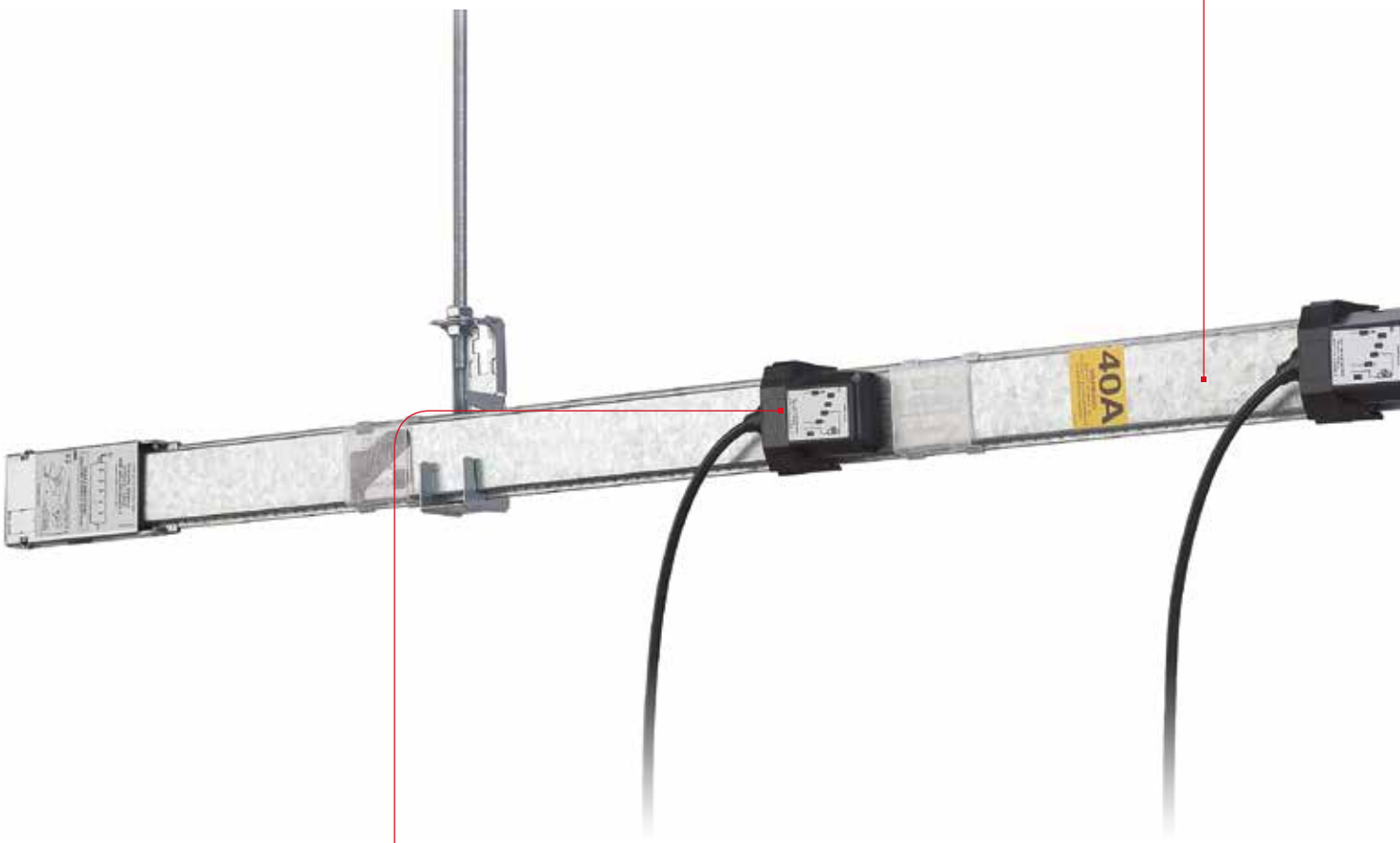

EXTENSIVE RANGE OF TAP-OFFS

- Comprehensive pre-wired range available, fused and unfused, 1m, 3m and 5m lengths – other lengths available on special request, all designed to meet exact requirements
- All Interact Overhead tap-offs are key coded to eliminate incorrect connections being made
- In situations where incompatible connections are accidentally made, all standard tap-offs are designed to be 'fail safe' – eliminates potential health and safety risks

Interact Overhead Power

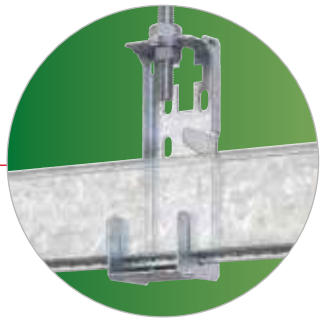

HANGING BRACKETS

- Snap fix suspension brackets requiring no tools to fit, suspend the overhead track
- The rigidity of the Interact design enables greater spans between brackets to be possible
- Reduced installation time, fewer parts to order
- Brackets are available with optional 50mm x 50mm trunking supports
- Caters for additional trunking support, reduces costs

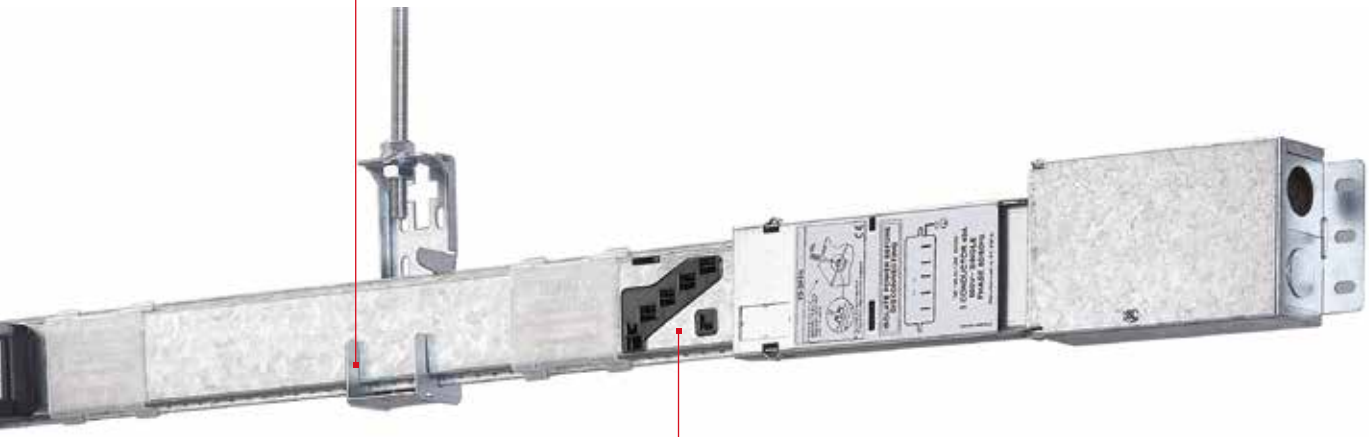

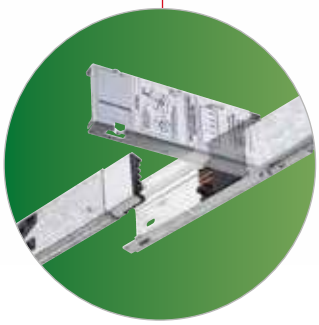

CROCODILE 'SNAP FAST' JOINT

- Patented Crocodile 'snap fast' joints provide a fast and simple connection
- All Interact Overhead joints are key coded to eliminate incorrect connections being made
- Strong and rigid construction to guarantee a robust installation and secure track connections

Whilst the track can remain 'live' when connecting or disconnecting tap-offs, appliances should not be on load.

Interact Overhead Power

40 Amp System

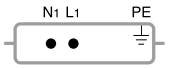

2+PE

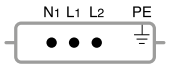

3+PE

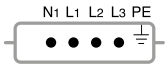

4+PE

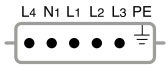

5+PE

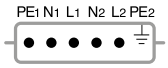

DUAL GREY 5+PE

Powertrack

2+PE	3+PE	4+PE	5+PE	Dual Grey 5+PE
Length 2m Pitch 500mm 4 sockets				
LB42053	LB42054	LB42055	LB42056	LB42056GRY
Length 4m Pitch 500mm 8 sockets				
LB44053	LB44054	LB44055	LB44056	LB44056GRY

All overhead powertrack sockets do not contain shutters and are rated to IP2X.

Infeeds

2+PE	3+PE	4+PE	5+PE	Dual Grey 5+PE
Standard				
LF43	LF44	LF45	LF46	LF46GRY
Opposite End Feed				
LF43 LH	LF44 LH	LF45 LH	LF46 LH	LF46GRY LH

Terminal Capacity = 16mm²
Opposite end feed suffix must be added when ordering where applicable.
Each opposite end feed comes with an end cap to close off the powertrack run.

Flexible Interlinks

2+PE	3+PE	4+PE	5+PE	Dual Grey 5+PE
1m				
LI4310	LI4410	LI4510	LI4610	LI4610GRY
3m				
LI4330	LI4430	LI4530	LI4630	LI4630GRY

Interact Overhead Power

Tap-off Leads

Type	Pin Position						Current Rating	Protection	1 metre 2.5mm²	3 metre 2.5mm²	5 metre 2.5mm²	Key Code
SINGLE PHASE		N1	L1			PE	25A	UNFUSED	LT12501C	LT32501C	LT52501C	
							16A	FUSED	LT11601C	LT31601C	LT51601C	
		N1		L2		PE	25A	UNFUSED	LT12502C	LT32502C	LT52502C	
							16A	FUSED	LT11602C	LT31602C	LT51602C	
		N1			L3	PE	25A	UNFUSED	LT12503C	LT32503C	LT52503C	
							16A	FUSED	LT11603C	LT31603C	LT51603C	
	L4	N1				PE	25A	UNFUSED	LT12504C	LT32504C	LT52504C	
SINGLE PHASE +L4	L4	N1	L1			PE	25A	UNFUSED	LT12521C	LT32521C	LT52521C	
	L4	N1	L1(F)			PE	16A	FUSED	LT11621C	LT31621C	LT51621C	
	L4	N1		L2		PE	25A	UNFUSED	LT12522C	LT32522C	LT52522C	
	L4	N1		L2(F)		PE	16A	FUSED	LT11622C	LT31622C	LT51622C	
	L4	N1			L3	PE	25A	UNFUSED	LT12523C	LT32523C	LT52523C	
	L4	N1			L3(F)	PE	16A	FUSED	LT11623C	LT31623C	LT51623C	
ALL PHASE		N1	L1	L2	L3	PE	25A	UNFUSED	LT12505C	LT32505C	LT52505C	
ALL PHASE + L4	L4	N1	L1	L2	L3	PE	20A	UNFUSED	LT12506C	LT32506C	LT52506C	
CIRCUIT 1 GREY	PE1	N1	L1				25A	UNFUSED	LT12501GRY	LT32501GRY	LT52501GRY	
							16A	FUSED	LT11601GRY	LT31601GRY	LT51601GRY	
CIRCUIT 2 GREY				N2	L2	PE2	16A	FUSED	LT11625GRY	LT31625GRY	LT51625GRY	
							25A	UNFUSED	LT12525GRY	LT32525GRY	LT52525GRY	
DUAL GREY	PE1	N1	L1	N2	L2	PE2	20A	UNFUSED	LT12526GRY	LT32526GRY	LT52526GRY	

(F) = Fused.
LSF Cable is supplied as standard. For PVC cable replace suffix 'C' with suffix 'PVC'. For Dual Grey system simply add suffix 'PVC'. Suffix must be added when ordering.
Polarity of tap-offs are configured to enable L4 to be used as a continuous conductor for Emergency Line.
When using tap-offs ensure that the line is protected by an appropriately rated protective device.
Key codes shown are from the perspective of the powertrack socket with the keycode in the top right corner.
The tap-off key code will be a mirror image when viewed from underneath.

Other Components

Part No.	Description
UK2	Hanging Bracket to suit up to ø10mm tie rod
UK2E	Hanging Bracket with 50mm x 50mm Trunking Suspension Arm
UK4	Hanging Bracket with Hook
UKDC	Additional Dust Cover

Please refer to Interact Overhead Power Technical – page 695, for details regards support bracket spacing and maximum suspended load.

HANGMANN

RANGE INTRODUCTION

Hangmann is a range of hanging service modules providing a portable and convenient means of distributing power, data and compressed air flow from overhead supplies.

Available as either a power module or combined power and compressed air module the units are made from a flame retardant grade of polyamide and are durable and resistant to chemicals.

FEATURES & BENEFITS

ROBUST DESIGN
To suit demanding applications

SUSPENSION CHAIN
Provides easy positioning of unit

FLEXIBLE SOLUTION
Wide range of modules

IDEAL FOR GARAGES, WORKSHOPS AND FACTORIES

5 YEAR GUARANTEE

HOW TO SPECIFY

A range of robust hanging service modules that provide portable and convenient power, data and compressed air. Product to feature a suspension hook for fast and simple installation and be resistant to impact, fire and chemical damage. An additional grab handle should be available to provide easy positioning of the device and space for tool hanging.

Hangmann

OVERHEAD POWER MAKES A SAFER WORK ENVIRONMENT

SUSPENSION HOOK
- Fast and simple installation

ROBUST DESIGN
- Impact resistant
- Fire retardant
- Chemical resistant

PRE-ASSEMBLED OPTIONS
- Ease of installation
- Simplified ordering

SUITED FOR USE IN 'TOUGH' ENVIRONMENTS

RANGE OF MODULES AND MOUNTING PLATES
- MK Commando products available
- Compressed air modules available
- Built in flexibility

GRAB HANDLE
- Hang tools
- Easy positioning of unit

MK 3 PIN SAFETY SHUTTER AS STANDARD

Hangmann

Power Modules

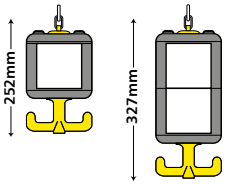

Part No.	Description
SM34900A0	Single Empty module*
SM34900C0	Double Empty Module*

* Selection of accessories and mounting plates are available below.

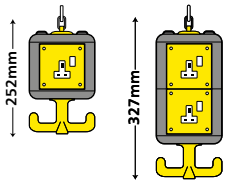

Part No.	Description
SM49004	Single Starter Pack: 2 x 13A Switch socket outlets 2 x Blank plates
SM49005	Single Starter Pack: 4 x 13A Switch socket outlets
SM49006	Double Starter Pack: 4 x 13A Switch socket outlets 4 x Blank plates
SM49007	Double Starter Pack: 8 x 13A Switch socket outlets
SM49010	Single Starter Pack: 3 x 13A Switch socket outlets 1 x Mounting plate for 2 x LJU6C modules (includes segregation backing plate)

Power modules arrive on site as individual components and have to be assembled separately

Compressed Air Modules

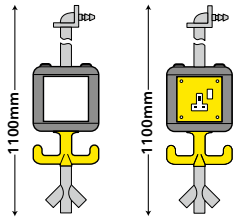

Part No.	Description
SM34901A0	Single Empty air Module*
SM49019	Single Air Starter Pack: 4 x 13A Switch socket outlets
SM49018	Single Air Starter Pack: 2 x13A Switch socket outllets 2 x Blank plates

* Selection of accessories and mounting plates are available.

Mounting Plates and Accessories

SM49009

SM49011

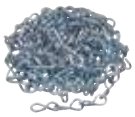
SMCHAIN5

SM42449

Part No.	Description
SM49008	13A Socket Outlet
SM49009	13A Switch socket outlet
SM49011	Mounting plate for 2 x LJU6C modules (includes segregation back plate)
SM49012	130V 16A Straight socket – Yellow (K9400YEL)
SM49013	250V 16A Straight socket – Blue (K9401BLU)
SM937895	Mounting plate for BS EN60309-2 socket outlet, 60mm fixing centres
SM910101	Blank mounting plate
SMCHAIN5	Suspension chain – 5m length
SM42449	Spring VHF80 80N
SM980911	Balancer Unit
SM980922	Locking balancer unit

Alternative congifurations, including data and circuit protection options are available via the MK Design Service.

Made GREAT In Britain

Optimal USB Charging from MK

MK Electric's USB Integrated Sockets are designed to provide optimal charging efficiency through Dynamic Device Recognition; the ability to detect charging nuances in the device and its appetite for power. For the ultimate user experience, different devices from multiple manufacturers can be charged simultaneously.

USB outlets provide a total of 2A combined charging, even when only one outlet is engaged, and vertically stacked ports ensure free access when socket outlets are in use.

MK's USB Integrated Sockets come with quality, safety and reliability as standard.

MK® by Honeywell

Technical

Range	Technical Data
Wireless	
Echo Wireless, batteryless, self-powered technology	437-440
White	
Logic Plus Widest selection of wiring devices in one range	441-484
Decorative	
Elements Stylish wiring devices - Innovative and iconic	497-525
Aspect Range of slimline, screwless devices	441-484
Edge Function and style with very slim profile frontplate	441-484
Albany Plus Contemporary Wiring Devices	441-484
Modular	
Grid Plus Modular switching and monitoring system	526-536
Lighting Controls	
Sensors A range of energy saving and lighting management products	485-491
Ceiling Accessories Lampholders, pendant sets and ceiling switches	492-494
Link Plug-in connection and distribution system for lighting	495-496
High Power Dimmer Range of dimmers to control large lighting loads	534-536

Range	Technical Data
Surface	
Metalclad Plus Tough, impact resistant surface mounted devicesy	441-484
Portable Power	
Duraplug Durable, strong and reliable accessories	538-540
Plugs and Adaptors High quality plugs and adaptors	541
Ingress Protected	
Masterseal Plus Comprehensive range of IP66 weatherproof devices	542-553
Commando Safetyswitch Impact resistant switches for indoors or outdoors	554-555
Commando Plugs and Sockets Comprehensive selection of industrial plugs and connectors	556-567
Commando Combination Units RCD protection with high impact PBT units	568-573

CASE STUDY

THE MONARCH, DUBAI

With its distinctive blue glass skin, Monarch Dubai and The Monarch Office Tower are a striking landmark on the Dubai skyline. Inside the twin towers the interiors of the hotel with its 236 luxury rooms and suites, and the 37 storey building of office space with each floor at approximately 12,000 square feet, are no less impressive.

MK's Edge range, manufactured in a unique dark brass finish, was an essential component in creating the overall look of sumptuous quality. Given a material sample by the project's interior design team, MK was able to quickly produce a finished example that achieved the levels of elegance and sophistication required for this prestigious development.

Impressed by the speedy response and the factory-ready sample the interiors team gave the go-ahead to specify the customised product range throughout.

Available on a worldwide basis, the MK Design Service is supported by a dedicated team to ensure the seamless delivery of your chosen products.

To find out more visit www.mkelectric.co.uk

MK Echo™ Technical

Transmitters

Standards and approvals

BS EN 60669-1, BS EN 60669-2-1,
ETSI EN301 489-1 & -3, ETSI EN61000-6-2,
ETSI EN300 220-3

TECHNICAL SPECIFICATION

PHYSICAL

AMBIENT OPERATING TEMPERATURE
-5°C to + 40°C

OPERATING FREQUENCY
868.3 MHz

IP RATING
IP2XD

MAX. INSTALLATION ALTITUDE
2000 meters

Dimensions

Transmitters: 86mm x 86mm
Fixing centres: 60.3mm

Mounting Transmitters

- All Transmitters can be mounted to any 1-gang back box.
- All can be mounted directly to the wall surface – screws supplied.
- All can be mounted to back boxes – screws supplied.
- Logic Plus™ and Aspect type Transmitters can also be mounted using supplied adhesive pads

Description

Echo™ is an innovative range of entirely wireless, batteryless and self powered switches, only available from MK Electric.

Wireless – allows for instant switch installation and location flexibility, reducing disruption and cost, as there is no need to run switching cables.

Self-Powered – Innovative patented technology to 'harvest' energy means zero maintenance as there are no batteries to change.

Ultimate Flexibility – Each receiver can be controlled by up to 32 switches/ transmitters.

Features

- Wireless and Batteryless – using RF technology with ranges up to 30m indoors
- Available in all MK wiring device aesthetics
- Quick and easy to install with no need for cabling from the switch to the lighting circuit
- Robust Metalclad Plus™ and Masterseal Plus™ available
- 400w and 10AX receiver/ repeaters available to cover most installation needs
- Switch Receivers are capable of switching all lighting types
- Each receiver can be controlled by up to 32 switches/transmitters

For a full range of corresponding products, see pages 21-31 in the product selector.

Echo™ is a registered trademark of Novar ED&S Limited

MK Echo™ Technical

Switch Receivers and Repeater

Standards and approvals

BS EN 60669-1, BS EN 60669-2-1,
ETSI EN301 489-1 & -3, ETSI EN61000-6-2,
ETSI EN300 220-3

TECHNICAL SPECIFICATION

ELECTRICAL

K5420R (WHEN USED AS A RECEIVER)

VOLTAGE RATING
250V a.c. 50Hz

CURRENT RATINGS
10AX – No de-rating when used on standard magnetic ballast fluorescent loads.

TERMINALS

Terminal screw size:	M3
Rated terminal screw torque:	0.5 Nm

TERMINAL CAPACITY
4 x 1mm²
3 x 1.5mm²
2 x 2.5mm²

PHYSICAL

OPERATING TEMPERATURE
-5°C to + 40°C

IP RATING
IP2XD

MAX. INSTALLATION ALTITUDE
2000 meters

K5420R

K5420R

The 10AX Receiver/Repeater can function both as a 1 level repeater and as a 10AX Switch Receiver.

Dimensions

10AX Switch Receiver/Repeater – K5420R

Length: 175.5mm

Width: 50.3mm

Height: 33.25mm

Echo™ is a registered trademark of Novar ED&S Limited

Transmitters, Receivers and Accessories

Echo™ Installer Guide

1. INTRODUCTION

The MK Echo™ range of products are different from all other products in MK's Wiring Devices portfolio in so far as the "switches" are RF transmitters which communicate with Switch Receivers. It is the Switch Receivers that actually switch the mains power.

Echo™ Transmitters send an RF signal at 868.3 MHz. The unique feature of these products is that the signal transmission is made without the need for mains power, or batteries.

Compared to installing hard-wired systems, wireless systems are much simpler and provide the flexibility to relocate or add to a system.

A symbol is visible on all Switch Receivers to indicate the position of the antenna. Although not always possible, the best reception will always be achieved if the front face of the Transmitter is directly facing the surface of the Switch Receiver on which the antenna symbol is shown.

2. PRINCIPLES OF RADIO SIGNALS IN BUILDINGS

Echo™ Transmitters send wireless transmissions to the Echo™ Switch Receivers. The receiver checks the incoming signal for accuracy and uses the data to control outputs. Radio signals are electromagnetic waves; hence the signal becomes weaker the further it travels.

Please note that RF signals also decrease in strength when they pass through certain materials between the transmitted signal and the receiver.

While radio waves can penetrate a wall, they are dampened more than on a direct line-of-sight path. A few examples of different types of wall and the realistic typical reduction in signal strength that can be seen are:

MATERIAL	ATTENUATION
Wood, plaster, uncoated glass, with no metal content	0 – 10%
Brick, pressed board	5 – 35%
Ferro-concrete	10 – 90%
Metal, aluminium lining	90 – 100%

In practice, this means that the material used in a building must be taken into consideration during any assessment for radio coverage.

Here are some typical guideline figures when using Logic Plus style Transmitters with plastic frontplates:

Line-of-sight connections:	typically 30m range in corridors, or up to 100m in halls
Plasterboard walls / dry wood:	typically 30m range, through 5 walls
Brick walls / aerated concrete:	typically 20m range, through 3 walls
Ferro-concrete walls / ceilings:	typically 10m range, through 1 ceiling

All other Transmitters in the range that have metal frontplates, do of course cause a reduction in the signal strength and therefore the transmission distance. Generally, the line of site distance in a hall is reduced from 100m described above for Logic Plus™, down to 30m.

3. SCREENING

Objects made of metal, such as wall reinforcements, the metal foil often used in certain forms of insulation, or metallised heat protected glass, reflect electromagnetic waves and thus create what is known as a radio shadow and thereby a reduction in transmission distance.

The main factors decreasing coverage include:

- A Transmitter mounted on metal surfaces (typically 30% loss of range).
- Transmitters with metal frontplates (typically 60% loss of range).
- Hollow lightweight walls filled with insulating wool on metal foil.
- Inserted ceilings with panels made of metal or carbon fibre.
- Lead glass or glass with metallised coating, steel furniture.

Please note: Fire-safety walls, elevator shafts, staircases and supply areas should be considered as screening.

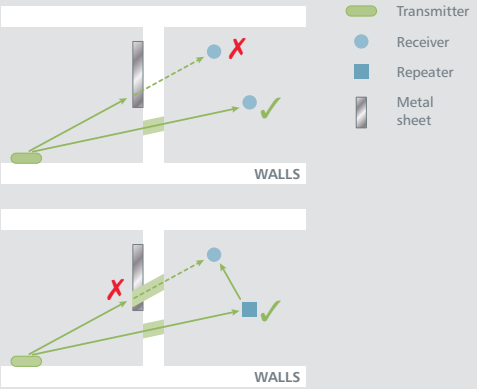

Simple example of a possible screening problem.

Depending on the material used to build the walls and assuming the distance between the transmitters and receivers are within specification, the illustrations above show a typical screening problem.

For the best range performance a minimum distance of 10mm to 20mm should be allowed from the whole length of the antenna to any conductive objects, which effectively means the area surrounding the Switch Receiver module.

Avoid screening by repositioning the Transmitter and / or Switch Receiver away from the screening objects (radio shadow), or if this is not possible, by using a Repeater.

Echo™ is a registered trademark of Novar ED&S Limited

MK Echo™ Technical

4. PENETRATION ANGLE

The angle at which the transmitted signal hits the wall is very important. The effective wall thickness – and with it the signal attenuation – varies according to this angle. Signals should be transmitted as directly as possible through the wall. Wall niches should be avoided.

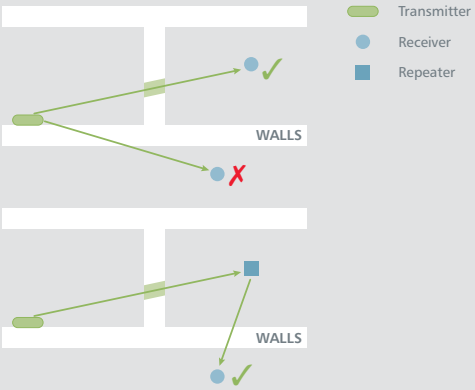

Avoid an unfavourable penetration angle by repositioning the Transmitter and / or Receiver, or by using a Repeater.

Do not position a Switch Receiver behind a Transmitter. In this position the signal strength is greatly reduced, even if there is no wall in-between.

5. ANTENNA INSTALLATION

Switch Receivers should not be installed on the same wall as the Transmitter. When positioned near a wall, the radio waves are likely to be subject to interfering dispersions or reflections.

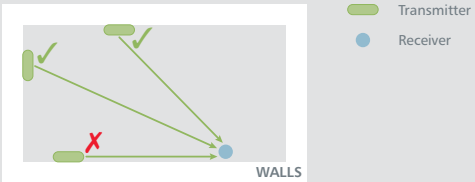

In a similar manner to the comment in the previous section, positioning transmitters and receivers along the same wall will mean the signal strength is greatly reduced.

6. DISTANCE BETWEEN SWITCH RECEIVERS AND A SOURCE OF INTERFERENCE

The distance between Switch Receivers and other transmitters (e.g. GSM / DECT / wireless LAN) or high-frequency sources of interference (computers, audio and video equipment) should be at least 500mm. However, Echo™ Transmitters can be installed next to any other high-frequency transmitter without a problem.

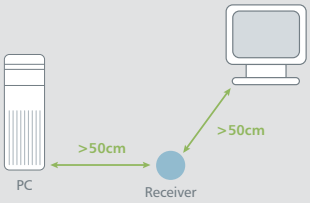

7. USE OF REPEATERS

In the case of poor reception, it may be helpful to use the repeater functionality built into switch receivers or a dedicated Repeater.

The 10AX Switch Receiver/Repeater (K5420R) is also a repeater when not programmed with any switches. The various possibilities of use are shown by the illustrations in sections 3. SCREENING and 4. PENETRATION ANGLE.

A Repeater has similar requirements in being positioned as a Switch Receiver, i.e. it too has an antenna and needs to receive the signal from the Transmitter and be within range of the Switch Receiver with which it is intended to communicate.

While planning, it may be worth considering retrofitting the system with a Repeater.

Echo™ is a registered trademark of Novar ED&S Limited

Installation general information

Socket outlets, switches and other MK wiring accessories can be wall or bench mounted. Do not use a trailing lead for sockets and connection units or mount any devices where they may be subject to excessive moisture or dampness.

Cable management

Socket outlets, switches and other MK wiring accessories can be mounted in a variety of MK trunking systems.

13A Socket Outlets

Standards and approvals

13A socket outlets comply with BS 1363 Part 2:1995.

Replacement fuses to the 3 gang switchsocket outlets (Logic Plus only) comply with BS 1362:1973.

TECHNICAL SPECIFICATION

ELECTRICAL

VOLTAGE RATING
250V a.c.

CURRENT RATING
13A
(3 Gang Switchsocket 13A total)

TERMINAL CAPACITY
Live, neutral & earth
3 x 2.5mm²
3 x 4mm²
2 x 6mm² (standard)
(Dual earth terminals on list Nos. K781, K2657, K2737, K2746, K2757, all standard Edge and Aspect sockets, K733, K2958, K2458, K2947, K2947D6, K850, K2977, K2477, K3045, K3077, K2945, K2945D6 and K5357)

PHYSICAL

AMBIENT OPERATING TEMPERATURE
–5°C to +40°C

IP RATING
IP2XD

MAX. INSTALLATION ALTITUDE
2000 metres

Description

A range of socket outlets designed for ease of installation and having all the advantageous design features of the MK range of wiring devices. The 2 gang sockets with outboard rockers (available in Logic Plus and Albany Plus) are of particular value for use by the infirm and partially sighted whilst the same feature in Metalclad Plus is ideal for use with gloved hands.

Non-standard clean earth sockets are for use on installations where restricted access is required and will only accept a 647WHI 13A non-standard plug with T-shaped earth pin. The sockets have two independent earth terminals so that they can also be used for 'clean earth' installations. The K2746CE and K2947CE also have two independent earth terminals for 'clean earth' installations.

A variety of sockets (see Technical Specification) are fitted with two earth terminals on a common busbar to provide a double earth facility for use when installations require a high integrity protective connection as specified within the latest edition of BS 7671 which should be referred to for guidance.

The products can be quickly installed as replacement for existing 13A sockets or in a new installation.

Fuse carriers

(Logic Plus 3 gang switchsocket only)

The fuse carrier is opened by a fast-acting, screwdriver-operated, worm-drive screw for ease of replacement.

For a full range of corresponding products, see pages 32-188 in the product selector.

Wiring Devices Technical

13A Socket Outlets

Installation

1 gang switchsocket – view from rear

Top-facing, angled, backed-out terminals make wiring easier and quicker.

FEATURES

- Moulded 'on' indicator flash on plastic switches will not rub off – totally safe
- Matching Metal rocker Switches (Edge™ and Aspect only)
- Optional neon indicators in the switch rockers with 175° visibility in the horizontal and vertical planes
- 3 pin operated safety shutter
- Printed terminal markings on grey rear mouldings for clearer identification
- Top access, angled terminals make wiring easier and quicker
- 3mm minimum switch contact gap
- Double pole switching
- Choice of inboard or outboard positioned rockers
- Additional electrical safety from DP Switch, neutral 'make first', 'break last' feature
- Switch contacts with silver contacts on both surfaces for good continuity
- Only one size of screwdriver required for installation
- Selection of products incorporating dual earth terminals for high integrity earthing
- Backed out and captive terminal screws
- 'Clean earth' sockets available
- Non-standard 'clean earth' sockets available

Wiring Devices Technical – Logic Plus™

2 Gang Switchsocket Outlet with Integrated Dual USB Charging Capability

Standards and approvals

Logic Plus™ 13A socket outlets and 2A USB charging outlets comply with BS 5733 and IEC 61558-2-16.

EMC Compatibility:
IEC 61000-6-1
IEC 61000-6-3

Products are CE marked and meet the requirements of the Low Voltage, EMC, RoHS and WEEE directives.

TECHNICAL SPECIFICATION

13A SOCKET OUTLETS

ELECTRICAL

VOLTAGE RATING
220-240V

CURRENT RATING
13A
Combined total 2A drawn from USB outlets

STANDBY POWER
150mW

TERMINAL CAPACITY
Live, neutral & earth
3 x 2.5mm²
3 x 4mm²
2 x 6mm² (stranded)

PHYSICAL

AMBIENT OPERATING TEMPERATURE
–5°C to +40°C

IP RATING
IP2XD

MAX. INSTALLATION ALTITUDE
2000 metres

Description

A range of socket outlets designed for ease of installation and having all the advantageous design features of the Logic Plus™ range. Dual USB charging outlets offer end users easy access to power for charging a variety of devices such as smart phones, tablets and cameras.

FEATURES

- Moulded 'on' indicator flash on switches will not rub off – totally safe
- 3 pin operated safety shutter on 13A socket outlets
- USB 2.0 and 3.0 compatible
- Can charge a device at up to a full 2A
- If only one device is connected to a USB outlet the total output current of 2A is available from either outlet
- If two devices are connected to USB outlets the the total rated current of 2A is divided between the two outlets
- Differing manufacturers devices can be charged simultaneously via the two USB outlets
- If the total charging current exceeds the rated level of 2A then the device will enter a current limiting safety mode
- Electronically protected against an overload or short circuit on either USB outlet
- USB outlets are designed to provide optimum charging compatibility across a wide range of devices
- Printed terminal markings on grey rear mouldings for clearer identification
- Top access, angled terminals make wiring easier and quicker
- 3mm minimum switch contact gap
- Double pole switching
- Additional electrical safety from neutral 'make first', 'break last' feature
- Switch contacts with silver contacts on both surfaces for good continuity
- Backed out and captive terminal screws
- Dual earthed

Installation

Logic Plus™ socket outlets can be wall or bench mounted.

Do not mount or use as a trailing socket or where they may be subject to excessive moisture or damp.

Cable management

Logic Plus™ socket outlets can be mounted in a variety of MK trunking systems.

BOX TYPES WITHOUT PATRESS

GANG	FLUSH	SURFACE INSULATED	SURFACE METAL
2 GANG	DEPTH 35MM	DEPTH 40MM	DEPTH 41MM
	886 ZIC	K2172 WHI	K2212 ALM K2214 ALM

Dimensions (mm)

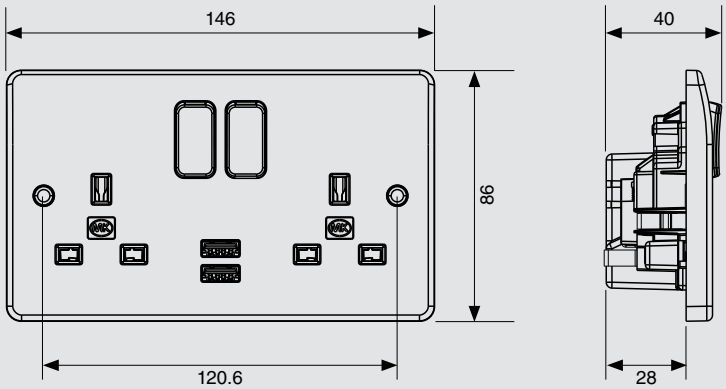

Wiring Devices Technical – Aspect

2 Gang Switchsocket Outlet with Integrated Dual USB Charging Capability

Standards and approvals

Aspect 13A socket outlets and 2A USB charging outlets comply with BS 5733 and IEC 61558-2-16.

EMC Compatibility:
IEC 61000-6-1
IEC 61000-6-3

Products are CE marked and meet the requirements of the Low Voltage, EMC, RoHS and WEEE directives.

TECHNICAL SPECIFICATION

13A SOCKET OUTLETS

ELECTRICAL

VOLTAGE RATING
220-240V

CURRENT RATING
13A
Combined total 2A drawn from USB outlets

STANDBY POWER
150mW

TERMINAL CAPACITY
Live, neutral & earth
3 x 2.5mm²
3 x 4mm²
2 x 6mm² (stranded)

PHYSICAL

AMBIENT OPERATING TEMPERATURE
–5°C to +40°C

IP RATING
IP2XD

MAX. INSTALLATION ALTITUDE
2000 metres

Description

A range of socket outlets designed for ease of installation and having all the advantageous design features of the Aspect range. Dual USB charging outlets offer end users easy access to power for charging a variety of devices such as smart phones, tablets and cameras.

FEATURES

- Slim screwless frontplate design
- Matching metal rocker switches
- 3 pin operated safety shutter on 13A socket outlets
- USB 2.0 and 3.0 compatible
- Can charge a device at up to a full 2A
- If only one device is connected to a USB outlet the total output current of 2A is available from either outlet
- If two devices are connected to USB outlets the the total rated current of 2A is divided between the two outlets
- Differing manufacturers devices can be charged simultaneously via the two USB outlets
- If the total charging current exceeds the rated level of 2A then the device will enter a current limiting safety mode
- Electronically protected against an overload or short circuit on either USB outlet
- USB outlets are designed to provide optimum charging compatibility across a wide range of devices
- Printed terminal markings on grey rear mouldings for clearer identification
- Top access, angled terminals make wiring easier and quicker
- 3mm minimum switch contact gap
- Double pole switching
- Additional electrical safety from neutral 'make first', 'break last' feature
- Switch contacts with silver contacts on both surfaces for good continuity
- Backed out and captive terminal screws
- Dual earthed

Installation

Aspect socket outlets can be wall or bench mounted.

Do not mount or use as a trailing socket or where they may be subject to excessive moisture or damp.

Cable management

Aspect socket outlets can be mounted in a variety of MK trunking systems.

BOX TYPES WITHOUT PATRESS

GANG	FLUSH
2 GANG	DEPTH 47MM
	878 ZIC

Dimensions (mm)

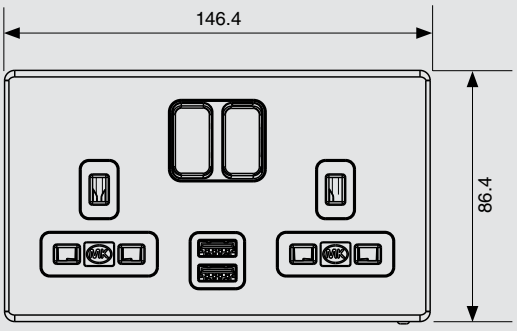

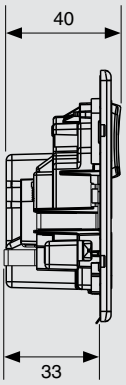

Wiring Devices Technical – Edge™

2 Gang Switchsocket Outlet with Integrated Dual USB Charging Capability

Standards and approvals

Edge™ 13A socket outlets and 2A USB charging outlets comply with BS 5733 and IEC 61558-2-16.

EMC Compatibility:
IEC 61000-6-1
IEC 61000-6-3

Products are CE marked and meet the requirements of the Low Voltage, EMC, RoHS and WEEE directives.

TECHNICAL SPECIFICATION

13A SOCKET OUTLETS

ELECTRICAL

VOLTAGE RATING
220-240V

CURRENT RATING
13A
Combined total 2A drawn from USB outlets

STANDBY POWER
150mW

TERMINAL CAPACITY
Live, neutral & earth
3 x 2.5mm²
3 x 4mm²
2 x 6mm² (stranded)

PHYSICAL

AMBIENT OPERATING TEMPERATURE
–5°C to +40°C

IP RATING
IP2XD

MAX. INSTALLATION ALTITUDE
2000 metres

Description

A range of socket outlets designed for ease of installation and having all the advantageous design features of the Edge™ range. Dual USB charging outlets offer end users easy access to power for charging a variety of devices such as smart phones, tablets and cameras.

FEATURES

- Matching metal rocker switches
- 3 pin operated safety shutter on 13A socket outlets
- USB 2.0 and 3.0 compatible
- Can charge a device at up to a full 2A
- If only one device is connected to a USB outlet the total output current of 2A is available from either outlet
- If two devices are connected to USB outlets the the total rated current of 2A is divided between the two outlets
- Differing manufacturers devices can be charged simultaneously via the two USB outlets
- If the total charging current exceeds the rated level of 2A then the device will enter a current limiting safety mode
- Electronically protected against an overload or short circuit on either USB outlet
- USB Outlets are designed to provide optimum charging compatibility across a wide range of devices
- Printed terminal markings on grey rear mouldings for clearer identification
- Top access, angled terminals make wiring easier and quicker
- 3mm minimum switch contact gap
- Double pole switching
- Additional electrical safety from neutral 'make first', 'break last' feature
- Switch contacts with silver contacts on both surfaces for good continuity
- Backed out and captive terminal screws
- Dual earthed

Installation

Edge™ socket outlets can be wall or bench mounted.

Do not mount or use as a trailing socket or where they may be subject to excessive moisture or damp.

Cable management

Edge™ socket outlets can be mounted in a variety of MK trunking systems.

BOX TYPES WITHOUT PATRESS

GANG	FLUSH
2 GANG	DEPTH 47MM
	878 ZIC

Dimensions (mm)

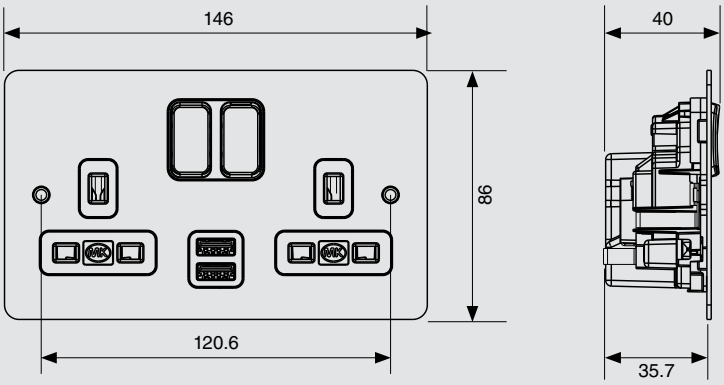

Wiring Devices Technical – Albany Plus™

2 Gang Switchsocket Outlet with Integrated Dual USB Charging Capability

Standards and approvals

Albany Plus™ 13A socket outlets and 2A USB charging outlets comply with BS 5733 and IEC 61558-2-16.

EMC Compatibility:
IEC 61000-6-1
IEC 61000-6-3

Products are CE marked and meet the requirements of the Low Voltage, EMC, RoHS and WEEE directives.

TECHNICAL SPECIFICATION

13A SOCKET OUTLETS

ELECTRICAL

VOLTAGE RATING
220-240V

CURRENT RATING
13A
Combined total 2A drawn from USB outlets

STANDBY POWER
150mW

TERMINAL CAPACITY
Live, neutral & earth
3 x 2.5mm²
3 x 4mm²
2 x 6mm² (stranded)

PHYSICAL

AMBIENT OPERATING TEMPERATURE
–5°C to +40°C

IP RATING
IP2XD

MAX. INSTALLATION ALTITUDE
2000 metres

Description

A range of socket outlets designed for ease of installation and having all the advantageous design features of the Albany Plus™ range. Dual USB charging outlets offer end users easy access to power for charging a variety of devices such as smart phones, tablets and cameras.

FEATURES

- Moulded 'on' indicator flash on switches will not rub off – totally safe
- 3 pin operated safety shutter on 13A socket outlets
- USB 2.0 and 3.0 compatible
- Can charge a device at up to a full 2A
- If only one device is connected to a USB outlet the total output current of 2A is available from either outlet
- If two devices are connected to USB outlets the the total rated current of 2A is divided between the two outlets
- Differing manufacturers devices can be charged simultaneously via the two USB outlets
- If the total charging current exceeds the rated level of 2A then the device will enter a current limiting safety mode
- Electronically protected against an overload or short circuit on either USB outlet
- USB outlets are designed to provide optimum charging compatibility across a wide range of devices
- Printed terminal markings on grey rear mouldings for clearer identification
- Top access, angled terminals make wiring easier and quicker
- 3mm minimum switch contact gap
- Double pole switching
- Additional electrical safety from neutral 'make first', 'break last' feature
- Switch contacts with silver contacts on both surfaces for good continuity
- Backed out and captive terminal screws
- Dual earthed

Installation

Albany Plus™ socket outlets can be wall or bench mounted.

Do not mount or use as a trailing socket or where they may be subject to excessive moisture or damp.

Cable management

Albany Plus™ socket outlets can be mounted in a variety of MK trunking systems.

BOX TYPES WITHOUT PATRESS

GANG	FLUSH	SURFACE INSULATED	SURFACE METAL
2 GANG	DEPTH 35MM	DEPTH 40MM	DEPTH 41MM
	886 ZIC	K2172 WHI	K2212ALM / K2214ALM

Dimensions (mm)

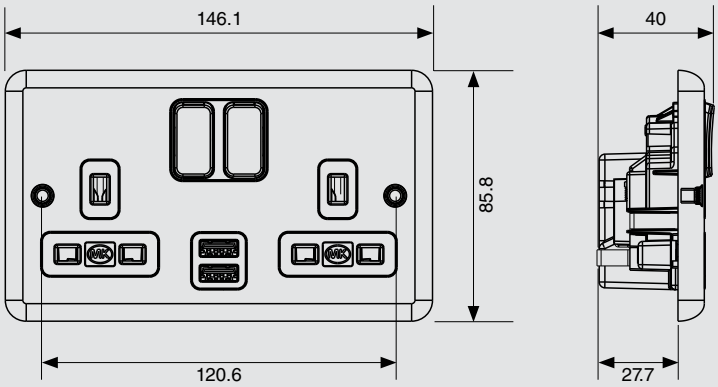

Wiring Devices Technical – Metalclad Plus™

2 Gang Switchsocket Outlet with Integrated Dual USB Charging Capability

Standards and approvals

Metalclad Plus™ 13A socket outlets and 2A USB charging outlets comply with BS 5733 and IEC 61558-2-16.

EMC Compatibility:
IEC 61000-6-1
IEC 61000-6-3

Products are CE marked and meet the requirements of the Low Voltage, EMC, RoHS and WEEE directives.

TECHNICAL SPECIFICATION

13A SOCKET OUTLETS

ELECTRICAL

VOLTAGE RATING
220-240V

CURRENT RATING
13A
Combined total 2A drawn from USB outlets

STANDBY POWER
150mW

TERMINAL CAPACITY
Live, neutral & earth
3 x 2.5mm²
3 x 4mm²
2 x 6mm² (stranded)

PHYSICAL

AMBIENT OPERATING TEMPERATURE
–5°C to +40°C

IP RATING
IP2XD

MAX. INSTALLATION ALTITUDE
2000 metres

Description

A range of socket outlets designed for ease of installation and having all the advantageous design features of the Metalclad Plus™ range. Dual USB charging outlets offer end users easy access to power for charging a variety of devices such as smart phones, tablets and cameras.

FEATURES

- Moulded 'on' indicator flash on switches will not rub off – totally safe
- 3 pin operated safety shutter on 13A socket outlets
- USB 2.0 and 3.0 compatible
- Can charge a device at up to a full 2A
- If only one device is connected to a USB outlet the total output current of 2A is available from either outlet
- If two devices are connected to USB outlets the the total rated current of 2A is divided between the two outlets
- Differing manufacturers devices can be charged simultaneously via the two USB outlets
- If the total charging current exceeds the rated level of 2A then the device will enter a current limiting safety mode
- Electronically protected against an overload or short circuit on either USB outlet
- USB outlets are designed to provide optimum charging compatibility across a wide range of devices
- Printed terminal markings on grey rear mouldings for clearer identification
- Top access, angled terminals make wiring easier and quicker
- 3mm minimum switch contact gap
- Double pole switching
- Additional electrical safety from neutral 'make first', 'break last' feature
- Switch contacts with silver contacts on both surfaces for good continuity
- Backed out and captive terminal screws
- Metallic powder paint finish is corrosion and scratch resistant
- Dual earthed
- High impact resistance

Installation

Metalclad Plus™ socket outlets can be wall or bench mounted.

Do not mount or use as a trailing socket or where they may be subject to excessive moisture or damp.

Cable management

Metalclad Plus™ socket outlets can be mounted in a variety of MK trunking systems.

BOX TYPES WITHOUT PATRESS

GANG	FLUSH	SURFACE
2 GANG	DEPTH 35MM	DEPTH 38MM
	886 ZIC	K830 ALM (without knockouts) K897 ALM and K897 WHI (with 8 x 20mm knockouts)

Dimensions (mm)

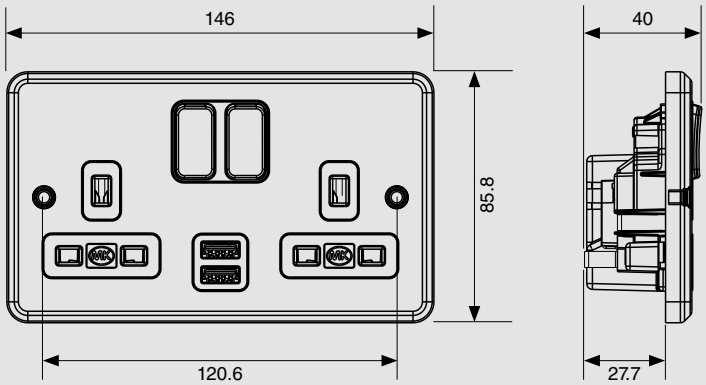

Wiring Devices Technical

Sentrysocket

Compliance with EC Directives, Standards and approvals

All Sentrysockets comply with the following EC Directives and are CE marked:

Low Voltage Directive
Electromagnetic Compatibility Directive (89/336/EEC)

Sentrysocket RCD DP Single Sockets comply with the requirements of the following standards:

BS 7288:1990
BS EN 50082-1:1998

Sentrysocket RCD SP Double Sockets also comply with the requirements of BS EN 61543:1996.

TECHNICAL SPECIFICATION

ELECTRICAL

RATED VOLTAGE
240V a.c.

CURRENT RATING
13A resistive
Rated tripping current 10mA/30mA

TERMINAL CAPACITY
3 x 4mm² for 1 gang
2 x 4mm² for 2 gang

PHYSICAL

AMBIENT OPERATING TEMPERATURE
–5°C to +40°C

IP RATING
IP2XD
IP66 (K56301/K56231/K56233)

MAX. INSTALLATION ALTITUDE
2000 metres

Sentrysockets are not suitable for connection across two lines of a 127V line to Neutral Voltage System

Cable management

Logic Plus™, Albany Plus™ and Metalclad Plus™ Sentrysockets can be mounted in a variety of MK trunking systems.

Installation

Flush mounting steel wall box

It should be noted that some of the conduit entries may be restricted, depending upon their positions and the depth of box used.

Description

Sentrysocket provides a high level of protection against electrocution and gives further protection when used with appliances vulnerable to insulation damage, particularly when they are in damp environments or outdoors. The Sentrysocket units are not suitable for mounting in damp environments or outdoors.

Sentrysocket, incorporating an RCD, is part of a complete range of fixed and portable wiring devices and circuit protection devices suitable for use in domestic, commercial and light industrial applications.

Active control circuits

Incorporate a 'Re-set' mechanism and are mains failure sensitive, i.e. they will function under all the normal conditions expected of an RCD, but will also trip in the event of a power cut or a sudden, dramatic reduction in mains voltage. This makes them ideal for use where it would be hazardous for equipment to suddenly energise after return of mains power, such as use with rotating machinery and heat developing apparatus.

Passive control circuits

Incorporate a 'Stay-set' mechanism and is mains failure proof, i.e. it will function under all the normal conditions expected of an RCD and will not trip in the event of a power cut. This makes it suitable for use with freezers or in inaccessible or unmanned locations.

FEATURES

- Suitable for most residential, commercial and light industrial applications
- Active and passive control circuit applications
- Flexible and versatile in use
- Single Sockets have double pole switching, double sockets are single pole switching
- Masterseal Plus products are ideal for use with equipment subject to wet weather or high humidity
- Part of a complete range of MK circuit protection devices
- They are a.c. and pulsating d.c. sensitive for residual current
- Double Socket products have an enhanced RF Immunity performance

Sentrysockets products can be wall or bench mounted. Do not mount or use as a trailing socket or where they maybe subject to excessive moisture or dampness.

Dimensions (mm)

Single socket

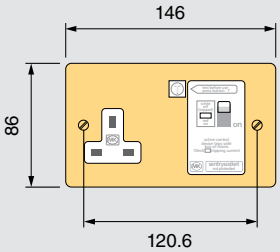

Double socket

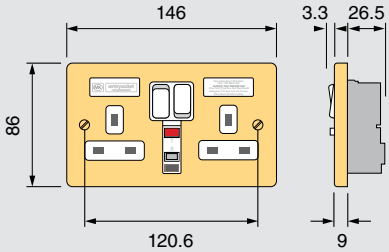

Sentrysocket

Installation

Flush mounting steel wall box

It should be noted that some of the conduit entries may be restricted, depending upon their positions and the depth of box used.

Socket Testing

Single Socket Testing

After installation, turn the mains electricity supply on.

To test that the Sentrysocket is functioning correctly:

1. Ensure that no appliance is connected to the Sentrysocket. **Switch Sentrysocket on**: The switch should remain closed and the red flag will appear in the window. If the switch fails to remain closed, check that the Supply L and N connections are not reversed or the Supply N connection is not open circuit. If the Sentrysocket is correctly connected and still trips after being switched on, the Sentrysocket is faulty and should not be used.
2. If the Sentrysocket stays on, **press the test button**: The switch will open and the white flag will appear In the window. If the Sentrysocket does not trip and there is mains voltage present at the socket outlet, Sentrysocket is faulty and should not be used.
3. **Switch Sentrysocket on**: Connect an RCD tester and ensure that the Sentrysocket trips within the specified time:
   ≤ 200 ms AT RATED TRIP CURRENT
   ≤ 40 ms AT 5 x RATED TRIP CURRENT

   If the Sentrysocket does not trip within the specified times then the product is faulty and should not be used (If more than one RCD is in series then there is no guarantee as to which device will trip first).
4. **Reset all tripped RCD's including the Sentrysocket**.
5. **Switch off the mains supply switch disconnector**. On mains failure, a Sentrysocket with Active Control Circuit will trip, whilst a Sentrysocket with Passive Control Circuit will not trip. If the Active Control device does not trip, it is faulty and should not be used – see note below. If no faults have been found then installation testing has been completed successfully.

Note: If a fault is identified at any stage of installation testing procedure do not use Sentrysocket, and contact your local electrician, or your local MK stockist.

Double Socket Testing

After installation, turn the mains electricity supply on.

To test that the Sentrysocket is functioning correctly follow the steps 1 to 4 below:

1. Ensure that no appliance is connected to the Sentrysocket.
2. **Reset** – Press the button marked R (for Reset) – the contact status indicator should show red, indicating that the socket outlets are now live (if the switches are in the ON positions).
3. **Test** – Press the TEST button marked T (for Test), the product should trip with the contact status indicator showing black. In this state the socket outlets are disconnected from the supply.
4. **Reset** – Press the button marked R again, the contact status indicator should show red.
5. Connect an RCD Tester to either socket outlet and ensure that the Sentrysocket trips with the specified times below:
   ≤ 200 ms AT RATED TRIP CURRENT
   ≤ 40 ms AT 5 x RATED TRIP CURRENT
6. Reset the Sentrysocket as in step 2 above.
7. Switch off the Mains Supply Switch Disconnector.
8. A Sentrysocket with Active Control Circuit should trip while a Sentrysocket with Passive Control Circuit should not trip.

If all the operations in steps 2 to 8 above give correct results, the Sentrysocket RCD socket outlet is safe to use.

If the procedures in steps 2 to 8 above are not completed correctly, do not use the Sentrysocket product and seek professional advice or contact the MK Technical Sales and Service department on +44 (0)1268 563720.

Wiring Devices Technical

Filtered Switchsocket Outlets (Logic Plus and Albany Plus)

Standards and approvals

Filtered socket outlets comply with BS 5733:2010.

TECHNICAL SPECIFICATION

ELECTRICAL

CURRENT RATING
13A maximum total for 2 sockets

VOLTAGE RATING
250V a.c.

EARTH LEAKAGE
0.5 mA

SUPPRESSION
150 kHz – 30 MHz (transients)

MAXIMUM ENERGY ABSORPTION
140 Joules L – N
140 Joules L – E

TERMINAL CAPACITY
2 x 6mm²
3 x 4mm²
3 x 2.5mm²
3 x 1.5mm²

PHYSICAL

AMBIENT OPERATING TEMPERATURE
-5°C to +40°C

THERMAL OVERLOAD
The K1826 and K2826 filter socket incorporates a thermal overload device in the RFI filter section. Overload current causes temperature rise, resulting in automatic 'trip out'. The overload device will re-set as the temperature falls.

IP RATING
IP2XD

MAX. INSTALLATION ALTITUDE
2000 metres

Description

A range of sockets in the Logic Plus and Albany Plus styles, designed to combat interference to or data losses on sensitive electrical products and systems due to mains borne voltage spikes and RFI.

Such systems include:

- Computer or microprocessor based equipment
- Telecommunications systems
- Electronic measurement equipment
- Cash registers
- Audio visual and hi-fi equipment

These products can be quickly installed as replacements for existing twin 13A sockets or in a new installation.

Fitted with two earth terminals to provide a double earth facility for use when installations require a high integrity protective connection as specified within the latest edition of BS 7671.

Filter cassettes

Filter cassettes are supplied with sockets and have an LED which shows green under normal conditions but will turn red or extinguish when a replacement cassette (K1800WHI) is required. An alarm will also beep at 5 second intervals to indicate replacement necessity. It can be de-activated if required.

FEATURES

- Moulded 'on' indicator flash on switches will not rub off – totally safe
- 3 pin operated safety shutter
- Printed terminal markings on grey rear mouldings for clearer identification
- Reduces risk of damage to equipment and down time
- Reduces risk of data loss
- 2 way filtering – into appliance and back into mains supply
- Additional electrical safety from DP Switch, neutral 'make first', 'break last' feature
- Double pole switches
- Dual earth terminals for high integrity earthing
- Clearly visible LED on filter cassette, changes from green to red when replacement required
- Simple replacement of cassettes
- 10 year guarantee (except filter cassette)
- 3mm minimum switch contact gap
- Backed out and captive terminal screws

Filtered Switchsocket Outlets

Product features

Ensure that the connecting pins protruding from the bottom of the replacement Filter Cassette are not damaged or bent before installation. If in doubt, contact MK Technical Sales Service Department on +44 (0)1268 563720.

The MK Filtered Switchsocket, in common with many other filters uses Voltage Dependant Resistors for spike suppression purposes. The performance of these devices will eventually degrade with use to a level where they will no longer provide adequate protection.

When this occurs the spike filer performance of the MK Filtered Switchsocket outlet can be restored by replacing the filter cassette.

When the filter cassette needs replacing, the green indicator on the Replacement Filer Cassette will glow red or go out, an audible beep every five seconds may also be heard.

Note: As with all filters, these Filter Sockets will reduce the magnitude of RFI and spikes and consequently their ability to interfere with connected equipment. They will not completely remove the interference from the supply.

Figure 1

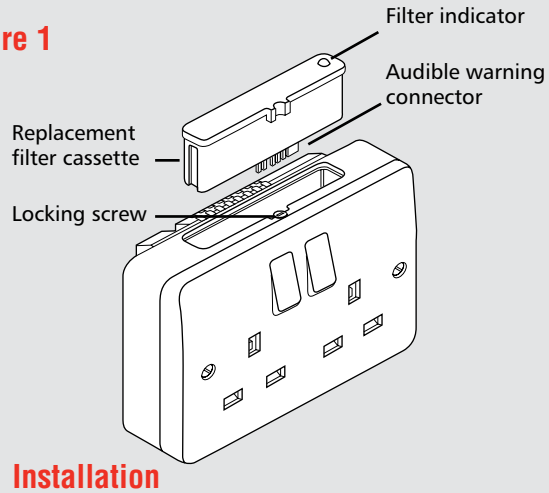

Installation

Replaceable Spike Filter Cassette

Note: To ensure a safe installation;

- this product should be installed by a competent person.
- it is important that all connections are made as instructed.

1. The filter cassette can be removed and replaced without switching off the mains or removing any plugs from the filter socket.
2. Remove the filter cassette by turning the jacking screw anti-clockwise to partially eject it (see Figure 2), and then gently pulling the cassette upwards, (see Figure 2a).
3. **Only fit the MK Replacement Filter Cassette (K1800WHI).**

   Unpack the new filer cassette and check that the pins along the bottom edge are not bent or broken. If these pins are damaged, do not fit the replacement cassette. The audible sound indicating that the filter cassette needs replacing, is optional. It may be prevented by removing the small connector on the two end pins, (see Figure 2b), before fitting it into the socket.

Figure 2

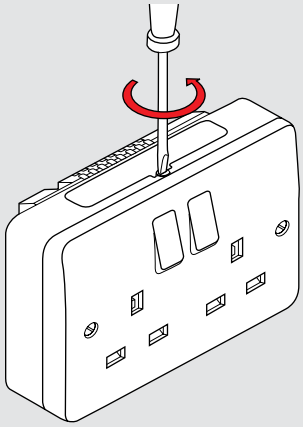

4. Fit the new filter cassette by carefully sliding it into the aperture and gently pushing it down while turning the screw clockwise until the filter cassette is flush with the surface. Do not turn the screw any further as this will cause distortion of the plastic mouldings.

   Product and packaging can safely be disposed of via standard refuse facilities at the end of its useful life.

Figure 2a

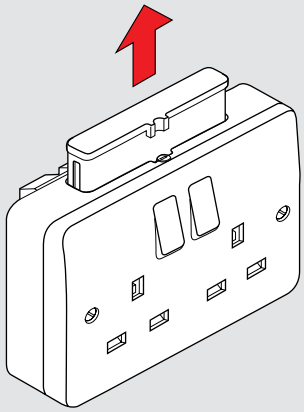

Figure 2b

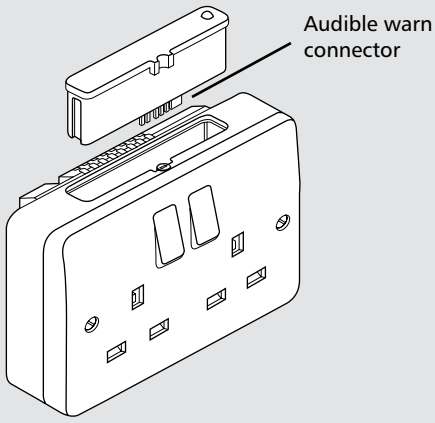

Wiring Devices Technical

Round Pin Socket Outlets

Standards and approvals

Round pin socket outlets comply with BS 546:1950.

TECHNICAL SPECIFICATION

ELECTRICAL

VOLTAGE RATING
250V a.c.

TERMINAL CAPACITIES
2A sockets:
7 x 1mm²
4 x 1.5mm²
2 x 2.5mm²
1 x 4mm²

5A sockets:
3 x 2.5mm²
2 x 4mm²
2 x 6mm² (stranded)

15A sockets:
3 x 2.5mm²
3 x 4mm²
2 x 6mm² (stranded)

PHYSICAL

AMBIENT OPERATING TEMPERATURE
-5°C to +40°C

IP RATING
IP2XD

MAX. INSTALLATION ALTITUDE
2000 metres

Description

A range of round pin socket outlets designed for ease of installation and having all the advantages and design features of the MK range of wiring devices.

These products can be quickly installed as replacements for existing socket outlets or in new installations.

FEATURES

- Top access terminals make wiring easier and quicker
- Integral ON indicator on plastic switches will not rub off – totally safe
- Switch contact gap, 3mm minimum
- Double pole switching
- Terminal screws backed out
- Additional electrical safety from neutral “make first”, “break last” feature on switched sockets
- Switch contacts with silver contact points on both surfaces for good continuity
- 5A and 15A sockets contain a 3 pin operated safety shutter.
- Printed terminal markings on grey rear mouldings for clearer identification

Non UK Socket Outlets

Standards and approvals

15A American sockets comply with SASO 2004:2003

16A 2P+E German sockets comply with IEC 60884-1:2006

TECHNICAL SPECIFICATION

ELECTRICAL

15A AMERICAN

VOLTAGE RATING
127V a.c.

CURRENT RATING
15A

TERMINAL CAPACITY
Live, neutral & earth
3 x 2.5mm²
2 x 4mm²
1 x 6mm² (stranded)

MAX. INSTALLATION ALTITUDE
2000 metres

16A 2P+E GERMAN SOCKET

VOLTAGE RATING
250V a.c.

CURRENT RATING
16A

TERMINAL CAPACITY
Live, neutral & earth
4 x 1.5mm²
2 x 2.5mm²
1 x 4mm²

PHYSICAL

AMBIENT OPERATING TEMPERATURE
-5°C to +40°C

IP RATING
IP2XD

MAX. INSTALLATION ALTITUDE
2000 metres

15A AMERICAN (Logic Plus*)

BOX TYPES			
GANG	FLUSH	FLUSH (FOR EXTRA WIRING SPACE)	SURFACE
1 GANG	861ZIC	866ZIC	K2140WHI
2 GANG	862ZIC	886ZIC	K2142WHI

16A 2P+E GERMAN (Logic Plus*)

BOX TYPES		
GANG	FLUSH	SURFACE
1 GANG	861ZIC	K2140WHI
2 GANG	862ZIC	K2142WHI

Note: 16A 2P+E German Outlet: These products are NOT suitable for 25mm deep boxes.

*15A American Sockets and 16A 2P+E German Sockets are also available in a modular format for MK decorative wiring device ranges.

Wiring Devices Technical

Three Pole Fan Isolators

Standards and approvals

Comply with BS EN 60669-2-4:2005

TECHNICAL SPECIFICATION

ELECTRICAL

VOLTAGE RATING
250V a.c.

CURRENT RATING
10A

RATED CONDITIONAL SHORT CIRCUIT CURRENT (Inc)
3000A

TERMINAL CAPACITY
4 x 1mm²
4 x 1.5mm²
3 x 2.5mm²
2 x 4mm²
1 x 6mm²

CONTACT GAP
4mm switch contact gap

RECOMMENDED SCPD
GE Power Controls TIA32M40 32A IEC269-2-1 Fuse-link

PHYSICAL

AMBIENT OPERATING TEMPERATURE
-5°C to +40°C

IP RATING
IP4X

MAX. INSTALLATION ALTITUDE
2000 metres

Features

- Switchlock list no. K4858 is available to allow the isolator to be locked in the disconnected position to facilitate fan maintenance

Description

The MK Three Pole Fan Isolator provides a safe and simple method of isolating mechanical fan units and is particularly useful in bathrooms, toilets, storerooms and basements where there is little or no natural light.

For example, timer controlled fans are often linked into the lighting circuit for energy saving and convenience. In such an installation there is often a need for the lighting circuit to remain live to provide light whilst the fan unit is externally isolated so that routine maintenance and repairs can be carried out in complete safety.

The fan isolator can be used as a double pole or triple pole isolator. In addition it includes a clear on/off indicator and the frontplate features a fan isolator symbol for easy circuit identification.

Wiring diagrams

Two pole switching for fan units without timers

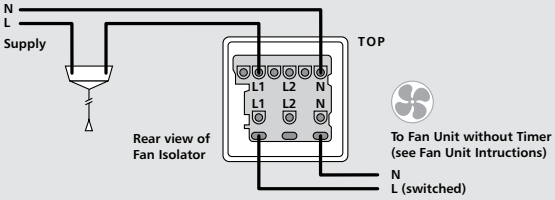

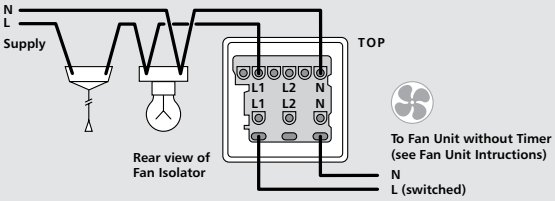

Three pole switching for fan units incorporating timers

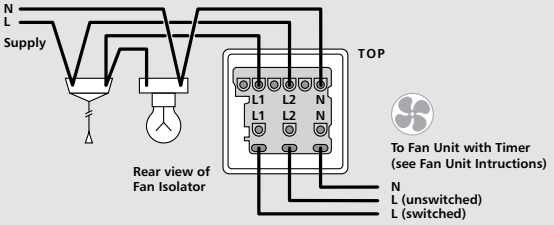

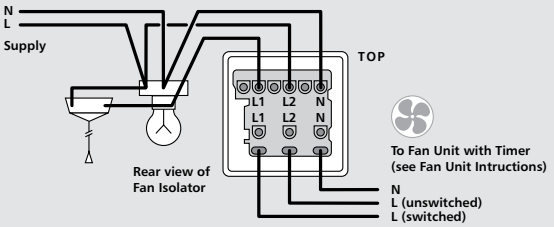

Wiring Devices Technical – Logic Plus™

Shaver Socket Outlets

Standards and approvals

Shaver socket outlets comply with BS 4573:1970 and IEC 60884-1:2006.

Plug pin apertures, and engagement face dimensions comply with BS 4573:1970.

TECHNICAL SPECIFICATION

ELECTRICAL

VOLTAGE RATING
200-250V a.c. Input

MAXIMUM LOAD
200 mA (internal thermister trip current)

TERMINAL CAPACITIES
Each terminal will accommodate
1 x 4mm², or 2 x 2.5mm², 3 x 1.5 solid conductors

PHYSICAL

AMBIENT OPERATING TEMPERATURE
-5°C to +40°C

IP RATING
IP2XD

MAX. INSTALLATION ALTITUDE
2000 metres

Description

Designed for ease of installation and having many of the advantageous features of the Logic Plus™ range.

The shaver socket outlet accommodates the following plugs:

British 5mm dia pins on 16.6mm pitch (230V socket) to BS 4573:1970.

European 4mm dia pins on 17 to 19mm pitch (230V socket) to IEC 83:1975 Standard C5.

Australian 6.5 x 1.6 flat blades each set at 30° to the vertical on a nominal pitch of 13.7mm (230V socket).

AS C112:1964.

The fuse carrier is captive and opened by a fast acting, screwdriver operated worm drive screw for ease of replacement.

FEATURES

- Top access terminals make wiring quicker and easier
- Only one size of screwdriver required for installation
- Terminal screws supplied 'backed out' and held captive within the terminal moulding
- White printed terminal markings on grey rear mouldings for clearer identification
- Front plate fixing screws retained on rear case moulding

Installation

This shaver socket **must not** be used in bathrooms and washrooms. Non-isolated, fused, shaver socket outlets must never be installed in any location subject to splashes, condensation or damp conditions.

For installation in any other room where a wash basin or shower cubicle is installed then refer to the current IET wiring regulations.

Wiring Devices Technical

Shaver/Toothbrush Supply Units

Standards and approvals

Shaver/Toothbrush supply units comply with BS 61558-2-5:1998

Accommodates plugs as follows:

- British 5mm dia pins on 16.6mm pitch (230V socket) to BS 4573:1970.
- European 4mm dia pins on 17 to 19mm pitch (230V socket) to BS EN 50075
- Australian 6.5 x 1.6 flat blades each set at 30° to the vertical on a nominal pitch of 13.7mm (230V socket) AS/NZS 3112:2000
- American 6.6 x 1.6 flat horizontal blades on 12.7mm pitch (115V socket) to UL498 / NEMA WD6.

TECHNICAL SPECIFICATION

ELECTRICAL

VOLTAGE RATING
K701: 230V a.c. Input (will operate at 220-250V a.c.)
K706: 127V a.c. Input (will operate at 110-130V a.c.)
230V or 115V nominal outputs

CURRENT RATING
K701: 200mA max.
(internal thermister trip current)
K706: 400mA max.
(internal thermister trip current)

MAXIMUM LOAD
20VA
No load voltage < 275V

TERMINAL CAPACITIES
Each terminal will accommodate 1 x 4mm² or 2 x 2.5mm² solid conductors

PHYSICAL

AMBIENT OPERATING TEMPERATURE
-5°C to +40°C

IP RATING
IP41 (In Zone 2 if fixed where direct spray from showers is unlikely)

MAX. INSTALLATION ALTITUDE
2000 metres

Description

Designed for ease of installation and having many of the advantageous design features of the MK range of wiring devices.

May be used in bathrooms and washrooms – must only be installed in accordance with the latest edition of BS 7671.

FEATURES

- Top access terminal screws make wiring quicker and easier
- Automatic primary supply switching on insertion of plug
- Choice of 230V or 115V output socket positions
- Safety interlocked shutters to prevent insertion of two plugs simultaneously
- Only one size of screwdriver required for installation
- Front plate fixing screws retained on rear case moulding
- Integral over current device to protect transformer
- Suitable for use with electric toothbrush chargers

Installation

Shaver/Toothbrush supply unit should be wall mounted.

13A Connection Units, 20A Switches and Flex Outlets

Standards and approvals

All Connection Units comply with BS 1363-4:1995.

All 20A DP Switches comply with BS EN 60669-1:1999.

Flex Outlet complies with BS EN 60670-22:2006.

Fuses comply with BS 1362:1973.

TECHNICAL SPECIFICATION

ELECTRICAL

VOLTAGE RATING
250V a.c.

CURRENT RATING
Connection Units: 13A
DP switches: 20A
Flex outlets: 20A

TERMINAL CAPACITY
Supply terminal:
2 x 6mm² stranded
2 x 4mm²
3 x 2.5mm²

Load terminals:
2 x 6mm² stranded
2 x 4mm²
3 x 2.5mm²

CORD GRIP CAPACITY
Connection units:
min: 2 core, 0.5mm
max: 3 core, 1.5mm

20A DP switches & flex outlet plate:
min: 3 core, 1.5mm
max: 3 core, 2.5mm

PHYSICAL

AMBIENT OPERATING TEMPERATURE
-5°C to +40°C

IP RATING
With flex outlet: IP2XD
Without flex outlet: IP4X

MAX. INSTALLATION ALTITUDE
2000 metres

Description

A range of 13A fused connection units and 20A DP switches designed for the connection of refrigerators, water heaters, central heating boilers and other fixed appliances.

The ranges are designed for ease of installation and have the advantageous design features of the MK range of wiring devices.

Neon indicators

Products are available with Neon indicators included in the rockers of the switched connection units. In the case of unswitched units, they are positioned centrally and uppermost on the face plate. Neon indicators are integrally wired into the product and do not require separate connection when installing. The design gives 175° visibility in the horizontal and vertical planes.

Fuse carriers

These are captive and are opened by a fast acting, screwdriver operated worm drive for ease of replacement. A tamper-proof version is also available.

Fuse carriers can be locked open using a padlock, List No. K2000.

Flex outlets

Bottom outlet types are supplied with blanking plug allowing use where the bottom outlet is not required.

The products are equipped with very strong, push-fit nylon cord grips making installation safe, quick and easy.

Flex outlet plate

An unfused flex outlet with cord grip and 3 pairs of terminals.

Installation

Wiring

Products must be installed in accordance with current IET Regulations.

Changing Fuses

1. Unscrew the fuse carrier screw to partially eject the carrier.
2. Carefully lever the carrier out further to remove the fuse.
   Note: The carrier does not come fully out.
3. Always replace with a BS 1362 type fuse (as used in 13A plugs) of the correct rating.
4. Consistent fuse blowing could mean a faulty appliance. If in doubt, consult a qualified electrician.
5. Push carrier back until engaging with jacking screw. Screw the carrier down until flush with surface of the plate. Do not over tighten the screw.

Wiring Devices Technical

13A Connection Units, 20A Switches and Flex Outlets

FEATURES

- Optional indicators in the switch rockers with 175° visibility in the horizontal and vertical planes
- Worm-drive operated fuse carriers for additional security (tamper-proof version available)
- Fuse carrier lockable in open position
- All supply and load cables can be cut and stripped to the same length
- Integrally wired Neon indicators save installation time
- Push-fit cord grips, for safer, quicker installation
- Angled, top mounted terminal screws simplify wiring
- Moulded 'on' indicator flash on switches cannot rub off – totally safe
- Captive fuse carrier
- Additional electrical safety from DP Switch, neutral 'make first', 'break last' feature
- Secure cable and flexible cord connection
- All terminal and fixing screws operated by one-size (4mm) screwdriver
- Backed out and captive terminal screws

Note: These switches are not recommended for switching large banks of PCs

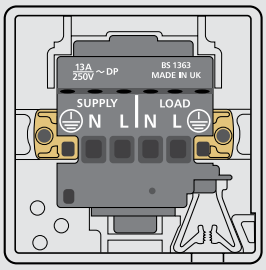

Supply and load cable cords cut and stripped to same length

Blanking plug for bottom outlet

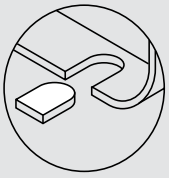

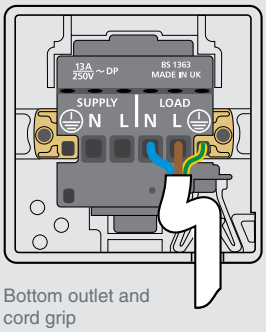

Bottom outlet and cord grip

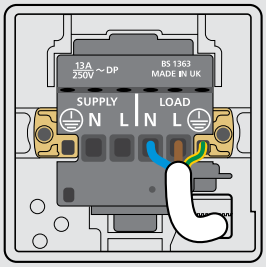

Front outlet cord grip

Lockable fuse carrier

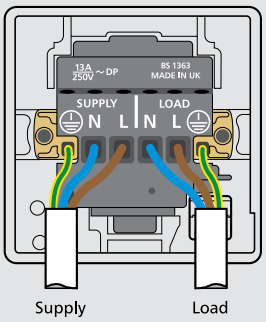

Supply and non flexible load cables

K1090WHI Flex Outlet

20A Key Operated Fire Alarm Isolator Switch

TECHNICAL SPECIFICATION

ELECTRICAL

VOLTAGE RATING
250V a.c.

CURRENT RATING
20A

TERMINAL CAPACITIES
Live, Neutral & Earth
3 x 2.5mm²
3 x 4mm²
2 x 6mm²

PHYSICAL

AMBIENT OPERATING TEMPERATURE
–5°C to +40°C

IP RATING
IP2XD

MAX. INSTALLATION ALTITUDE
2000 metres

Description

The isolators comply with BS 60669-2-4:2005

The Isolator is intended for use with building alarm systems that are required to comply with BS 5839 Part 1.

FEATURES

- The built in lock ensures power cannot be provided without the key being operated, making it safe to carry out maintenance to fire alarms
- Printed terminal markings on grey rear of the switch moulding for clearer identification
- Double Pole switching
- Only one size of screwdriver required for installation

Note: The lock fitted to these isolators is universal for all MK 20A Isolators in the range i.e. a common key profile.

However, the keys are different to those used on all other MK Key Operated Switched Products, for added security.

Wiring Devices Technical

High Current Switches and Cooker Control Units

Standards and approvals

All DP switches in the range comply with BS EN 60669-1:1999.

All Cooker Control Units in the range comply with BS 4177:1992.

Cooker Connection Unit comply with BS EN 60670-22:2006

TECHNICAL SPECIFICATION

ELECTRICAL

VOLTAGE RATING
250V a.c.

CURRENT RATING
32A Switch
45A Cooker Control Unit
45A Cooker Connection Unit
50A Switch (Resistive Load)

SWITCH
3mm contact gap
Double pole operation –
except socket switch on Cooker Control Units

TERMINAL CAPACITY 50A SWITCHES
Cooker Control Units, and Cooker Connection Units:
4 x 4mm²
3 x 6mm²
1 x 10mm²
1 x 16mm²

TERMINAL CAPACITY, 32A SWITCH
3 x 2.5mm²
2 x 4mm²
1 x 6mm²

PHYSICAL

AMBIENT OPERATING TEMPERATURE
-5°C to +40°C

IP RATING
IP2XD
Cooker Control Units

IP4X
32A Switch, 50A Switch, Cooker Connection Unit

MAX. INSTALLATION ALTITUDE
2000 metres

Description

A range of switches and cooker control units suitable for the switching of all domestic, commercial and industrial appliances where higher current ratings are required, i.e. cookers, heaters, units etc. Metal units are particularly suitable for refurbishment projects.

FEATURES

- Positive switch action
- Positive double pole switching
- Toggle action switches
- Metal front plates available
- Replaceable neon indicators
- Wide product choice

Note: These switches are not recommended for switching large banks of PCs

Plateswitches

Standards and approvals

All MK plateswitches comply with BS EN 60669-1:1999.

TECHNICAL SPECIFICATION

ELECTRICAL

VOLTAGE RATING
250V a.c.

CURRENT RATING
10A – no derating when used on fluorescent or inductive loads

20A – no derating when used on fluorescent or inductive loads

Push / Retractive switch types are not intended for fluorescent loads.

TERMINAL CAPACITY
4 x 1mm²
4 x 1.5mm²
3 x 2.5mm²
2 x 4mm²
1 x 6mm²

CONTACT GAP
3mm switch contact gap

PHYSICAL

AMBIENT OPERATING TEMPERATURE
-5°C to +40°C

IP RATING
IP2XD

MAX. INSTALLATION ALTITUDE
2000 metres

Operational testing (all plateswitches): tested to 100,000 operations for mechanical life tested to 40,000 operations at 10A rating tested to 10,000 operations at 20A rating.

Description

MK plateswitches are designed to blend in with the decor, whilst complementing a wide range of other MK wiring devices. They are designed for easy installation in plasterdepth boxes and are suitable for controlling lighting circuits in domestic, commercial and industrial applications.

Neon locator

A textured, polycarbonate moulding allowing the glow of the neon to be seen at almost any angle. Designed to complement the Logic Plus 1, 2, or 3 gang plateswitches.

It is easy to install in existing locations. For 3 gang applications using a 25mm deep box simplifies wiring.

FEATURES

- Two way switches can be wired as one or two way
- Matching Grid switches available in 10 or 20A ratings
- 3mm switch contact gap
- Positive switch action
- Top access, backed out and captive terminal screws
- Neon locator available making switch easy to find in darkened rooms (Logic Plus™ only)

Wiring Devices Technical

Plateswitches

Wiring diagrams

One-way switching

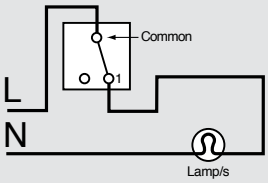

Two-way switching – 2 wire control

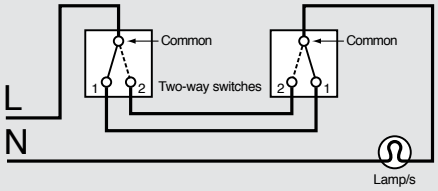

Dotted lines show alternative switch positions

Two-way switching plus intermediate switching – 2 wire control

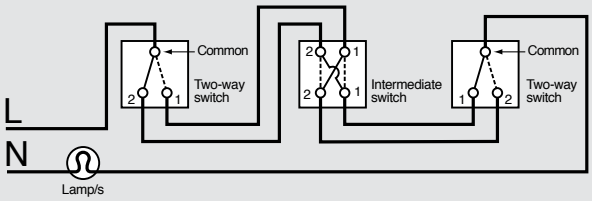

Dotted lines show alternative switch positions

Two-way switching – 3 wire control

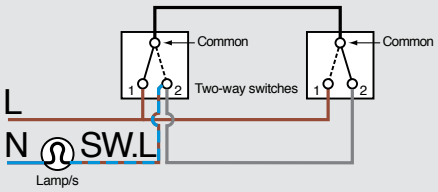

Dotted lines show alternative switch positions

Two-way switching plus intermediate switching – 3 wire control

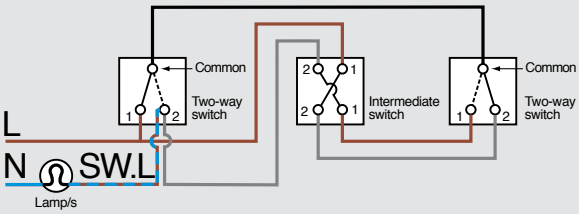

Dotted lines show alternative switch positions

N.B. Terminal positions may alter. The above diagrams are to show wiring layout.

Dimmer Switches

Standards and approvals

All CE marked Logic Plus™ dimmer switches comply with the EC Low Voltage

Directive: 73/23/EEC, Electromagnetic Compatibility Directive 89/336/EEC

They also comply with BS EN 60669-2-1 and IEC 60669-2-1 (LED Intelligent Dimmer only)

*Non-UK dimmer switches see note below

TECHNICAL SPECIFICATION

ELECTRICAL

MAINS SUPPLY VOLTAGE
230V a.c. (Nominal)
220V a.c. (Nominal, Non-UK)
220V a.c. to 240V a.c. (For LED Intelligent Dimmer)

MAINS SUPPLY VOLTAGE RANGE
216V a.c. to 253V a.c.
200V a.c. to 250V a.c
198V a.c. to 264V a.c. (For LED Intelligent Dimmer)

MAINS SUPPLY FREQUENCY
50Hz ±3Hz
60Hz ±3Hz

TYPE OF LOADS

STANDARD DIMMERS
Fused GLS Tungsten Filament lamps only to BS EN 60064:1996 and BS EN 60432-1:2000, rated at 230/240V

INTELLIGENT DIMMERS AND LED INTELLIGENT DIMMERS:
Fused GLS Tungsten Filament lamps to BS EN 60064:1996 and BS EN 60432-1,2 rated at 230/240V. Dimmable wire wound or electronic Low Voltage Transformers of good quality. Can also be used with good quality mains voltage halogen lamps incorporating GU10 bases. Please check with lamp manufacturer to determine suitability.

Note: Transformer must be suitable for dimming using phase delay (leading edge) and NOT only phase cut (trailing edge) type of dimmers.

Warning: These dimmer switches are not suitable for use with Fluorescent Lamps or Energy Saving Lamps.

PHYSICAL

AMBIENT OPERATING TEMPERATURE
0°C to +40°C

IP RATING
IP2XD

MAX. INSTALLATION ALTITUDE
2000 metres

Description

MK dimmer switches can fall into one of four categories

1) Standard Dimmer Switches
2) Intelligent Dimmer Switches
3) Non-UK Dimmer Switches
4) LED Intelligent Dimmer Switches

Standard Dimmer Switches

Dimmer Switches belonging to this category employ simpler electronic circuitry and the CE marked products make use of thermal switches to conform to the very stringent requirements of the Standard BS EN 60669-2-1, for overload protection. They are only suitable for use with normal tungsten filament lamps, conforming to BS EN 60064:1996 and BS EN 60432-1 Standards and do not have any added features, e.g. soft start, ability to control dimmable transformers for low voltage, etc.

Standard Dimmer Switches are not suitable for use with transformers for Low Voltage Lighting or Fluorescent Loads, including Energy Saving Lamps.

Intelligent and LED Intelligent Dimmer Switches

Dimmer Switches belonging to this category, employ the latest, state of the art, micro-controller based electronic circuitry and use current sensing to compute the load conditions. These products show progressive reaction to overload conditions, depending on the extent of overload as shown in the table below. List numbers belonging to this category are identified by the suffix letters LV, e.g. K1501 WHI LV. All MK Intelligent Dimmer Switches employ one pole change over switches to facilitate two way switching.

MK Intelligent and LED Intelligent Dimmer Switches are not suitable for use with Fluorescent Loads, including Energy Saving Lamps.

*Non-UK Dimmer Switches

Dimmer switches belonging to this category only conform to the relevant parts of BS EN 66069-2-1. Loads suitable for use with standard dimmer switches above are also suitable for use with this category of dimmer switch.

Only one Dimmer Switch can be used in a two-way switching circuit.

Minimum Brightness Adjustment for LED Intelligent Dimmers

The light output of some LED lamps may appear to be too dim or invisible when the dimmer knob is at the minimum dim level. Follow the steps below to adjust the minimum brightness level. This feature is primarily for adjusting the minimum brightness level of the LED lamp although it can be used for other load types.

For a double gang dimmer, the light level of each gang has to be adjusted separately.

Step 1 – Access To Programming Mode

1. Push the dimmer knob so that it is in OFF state.
2. Set the dimmer knob to minimum level.

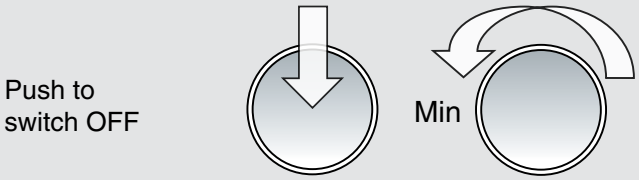

3. Turn on the dimmer and immediately rotate the knob 3 times in full rotary span within 5 seconds.

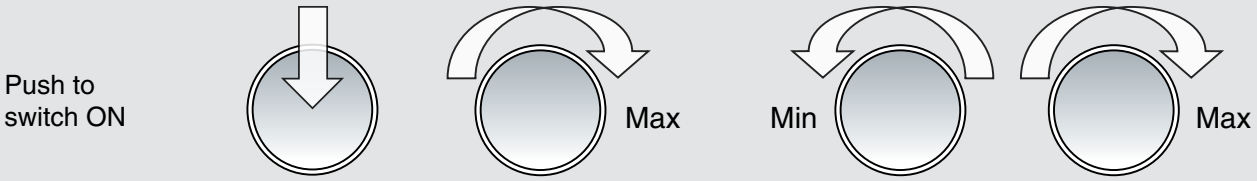

NOTE: Wait for 3 seconds, the lamp will then dim to minimun before automatically brightening to about 30% level. Turning/pushing the dimmer knob before the end of automatic brightening will end access to programming mode

4. Dimmer enters programming mode.

Step 2 – Adjust Brightness Level and Exit Programming Mode

5. Rotate the dimmer knob anticlockwise to adjust the lamp to the desired brightness level.

NOTE: Some LED lamps may not work properly if the brightness level is set too low thus it is recommended to keep the brightness level of the lamp at a visible level. The dimmer will exit programming mode automatically without saving the new setting if there is no dimmer knob movement for 15 seconds. The dimmer will restore its factory default light level.

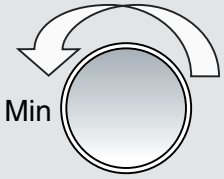

Turn anticlockwise to adjust the brightness level.

6. Confirm the new setting and exit programming mode by turning OFF the dimmer.

Step 3 – Success indication (Programming Complete)

7. The next time the dimmer is turned on the lamp will automatically brighten to the maximum level before dimming to the brightness level corresponds to the knob level.

Dimmer Switches

FEATURES

Intelligent and LED Intelligent Dimmer Switches incorporate the following advanced features

- Suitable for dimming Low Voltage Halogen lamps via good quality, fully dimmable electronic or wire-wound transformers. In addition, LED Intelligent dimmer switches are suitable for dimmable LED bulbs for incandescent replacement.
- Can be used with good quality mains voltage halogen lamps incorporating GU10 bases. Please check with lamp manufacturer to determine suitability
- Load current sensing:
  These dimmers continuously monitor the load current to help protect against overheating in wire wound transformers and to prevent overloading of the dimmer for long term reliability
- Soft Start, which gradually increases the light output from the load over 1 to 3 seconds after switch on. The Soft Start feature is also particularly beneficial when used to dim Mains Voltage Tungsten Halogen lamps which inherently have a very high inrush current at switch on

Standard Dimmer Switches

- Suitable only for use with fused GLS Tungsten Filament lamps to BS EN 60064 and BS EN 60432-1
- One way dimmer switches incorporate manual soft start
- Incorporate thermal switches for protection against overload

LOAD TYPES AND LOADINGS

DIMMER SERIES	DIMMER SIZE (1 GANG)	RATING			MAX NO. OF TRANSFORMERS AND LEDS (TOTAL RATING MUST NOT EXCEED MAX.VA RATING OF DIMMER)	
		GLS AND MAINS VOLTAGE HALOGEN	ELECTRONIC OR WIRE WOUND LV TRANSFORMERS	LED	TRANSFORMERS	LEDS
INTELLIGENT DIMMER SWITCHES	single dimmer	40-300W	40-240W/VA	–	4	–
	double dimmer	2 x 40-300W	2 x 40-240W/VA	–	4 per dimmer	–
	single dimmer	60-500W	60-400W/VA	–	5	–
STANDARD DIMMER SWITCHES	single dimmer	40-250W	–	–	–	–
	double dimmer	2 x 40-250W	–	–	–	–
	single dimmer	65-450W	–	–	–	–
LED INTELLIGENT DIMMER SWITCHES	single dimmer	40-300W	40-240W/VA	4-70W	4	10
	double dimmer	2 x 40-300W	2 x 40-240W/VA	2 x 4-70W	4 per dimmer	10 per dimmer

Do not connect more than the maximum number of transformers stated for each dimmer.

One-way switching

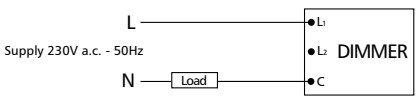

Two-way switching
(only one dimmer can be used)

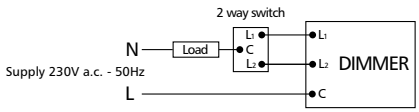

Wires must be connected to the correct dimmer terminals.
DO NOT connect earth to dimmer.

Please note the dimmer may be substituted for any Two-Way switches.

OVERLOAD MANAGEMENT

60-500W CIRCUIT	40-300W CIRCUIT	LED INTELLIGENT DIMMER
60-500W nominal	40-300W nominal	40-300W nominal
60-625W function without dimming	40-375W function without dimming	40-375W function without dimming
> 625-750W dim to 68V±8V r.m.s.	> 375-500W dim to 68V±8V r.m.s.	> 375-600W dim to minimum level
> 750W switch off	> 500W switch off	> 600W switch off

Wiring Devices Technical

Euro and LJU6C Data Frontplates

Standards and approvals

BS 5733:2010

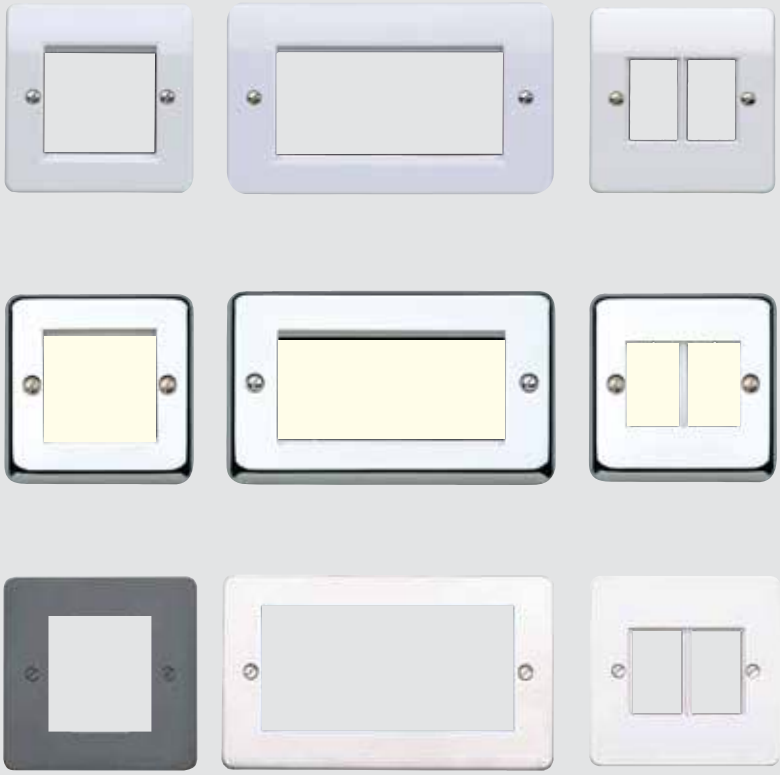

Description

Frontplates used for mounting snapfit modules.

FEATURES

- 1G, 2G and 3G Euro frontplates
- 1G LJU6C Frontplate
- Accept industry standard (Euro) and LJU6C snapfit modules
- 1G Euro frontplate accepts 2 Euro modules, (50 x 50mm aperture)
- 2G Euro frontplate accepts 4 Euro modules, (100 x 50mm aperture)
- 3G Euro frontplate accepts 6 Euro Modules, (150x50mm aperture)
- 1G LJU6C frontplate accepts two LJU6C modules (27 x 37mm aperture)
- 1/2 , 1 and 2 module Euro Blanks available
- 1 module LJU6C Blank available

Power Modules

Standards and approvals

K5830: BS 1363 Part 2:1995

K5831: IEC 60884-1:2006

K5832: SASO 2204:2003

K5833: BS 546:1950

K5834: French National Standard NF C 61-314

Description

A range of euro modules designed to provide a variety of power options.

TECHNICAL SPECIFICATION

13A UK	5A UK	16A GERMAN	16A FRENCH/BELGIAN	15A AMERICAN	2A USB CHARGING MODULE	
ELECTRICAL	**ELECTRICAL**	**ELECTRICAL**	**ELECTRICAL**	**ELECTRICAL**	**ELECTRICAL**	**OUTPUT**
VOLTAGE RATING 250V a.c.	VOLTAGE RATING 250V a.c.	VOLTAGE RATING 250V a.c.	VOLTAGE RATING 250V a.c.	VOLTAGE RATING 127V a.c.	**INPUT** VOLTAGE RATING 220-240V a.c.	VOLTAGE RATING 2 x 5V d.c.
CURRENT RATING 13A	CURRENT RATING 5A	CURRENT RATING 16A	CURRENT RATING 16A	CURRENT RATING 15A	FREQUENCY 50-60Hz	MAX CURRENT Combined total of 2A
TERMINAL CAPACITY Live, neutral & earth 3 x 2.5mm² 3 x 4mm² 2 x 6mm² (stranded)	TERMINAL CAPACITY Live, neutral & earth 3 x 2.5mm² 3 x 4mm² 2 x 6mm² (stranded)	TERMINAL CAPACITY Live, neutral & earth 4 x 1.5mm² 2 x 2.5mm² 1 x 4mm²	TERMINAL CAPACITY Live, neutral & earth 3 x 2.5mm² 3 x 4mm² 1 x 6mm²	TERMINAL CAPACITY Live, neutral & earth 3 x 2.5mm² 3 x 4mm² 1 x 6mm² (stranded)	TERMINAL CAPACITY Live & neutral 3 x 2.5mm²	CHARGING SOCKETS USB 2.0 Type A, USB 3.0
PHYSICAL	**PHYSICAL**	**PHYSICAL**	**PHYSICAL**	**PHYSICAL**	**PHYSICAL**	
AMBIENT OPERATING TEMPERATURE -5°C to +40°C	AMBIENT OPERATING TEMPERATURE -5°C to +40°C	AMBIENT OPERATING TEMPERATURE -5°C to +40°C	AMBIENT OPERATING TEMPERATURE -5°C to +40°C	AMBIENT OPERATING TEMPERATURE -5°C to +40°C	AMBIENT OPERATING TEMPERATURE 0°C to +40°C	
IP RATING IP2XD	IP RATING IP2XD	IP RATING IP2XD	IP RATING IP2XD	IP RATING IP2XD	IP RATING IP3xC	
MAX. INSTALLATION ALTITUDE 2000 metres	MAX. INSTALLATION ALTITUDE 2000 metres	MAX. INSTALLATION ALTITUDE 2000 metres	MAX. INSTALLATION ALTITUDE 2000 metres	MAX. INSTALLATION ALTITUDE 2000 metres	MAX. INSTALLATION ALTITUDE 2000 metres	

Dimensions (mm)

13A UK

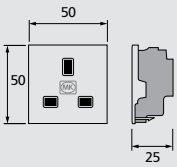

K5830

BOX TYPES
MINIMUM
35MM
EXTRA WIRING SPACE
46MM

5A UK

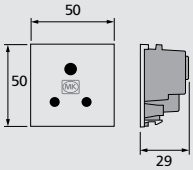

K5833

BOX TYPES
MINIMUM
35MM
EXTRA WIRING SPACE
46MM

16A German

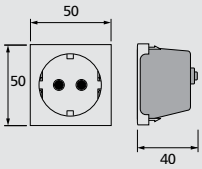

K5831

BOX TYPES
MINIMUM
46MM

16A French/ Belgian

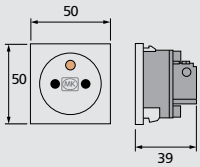

K5834

BOX TYPES
MINIMUM
46MM

15A American

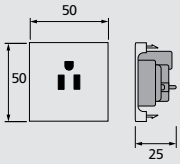

K5832

BOX TYPES
MINIMUM
35MM
EXTRA WIRING SPACE
46MM

2A USB Charging Module

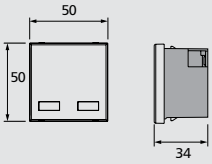

K5837

MK EURO FRONT PLATE THICKNESS	BOX TYPES
> 7mm	Min 35mm
< 7mm	Min 46mm

Wiring Devices Technical

RJ45 Data Outlets

Standards and approvals

ISO/IEC 11801

EN 50173

TIA 568

EN 41003

Installation

- Maximum cable length 90m.
- Cable bend radii, 40mm during installation, 20mm after installation.
- Maximum pull force 8.7kg.
- Do not over tighten cable ties.
- Do not unwind the twists in the wire pairs by more than 13mm max.

Description

Suitable for use in all LJU6C and Euro frontplates, available in the Logic Plus range, Cat 5e and Cat 6 modules suitable for use in structured cabling distribution systems.

Installation details and wiring diagram illustrations

TIA WIRING SCHEME COLOUR CODES		
PIN NO.	568A	568B
1	WHITE / green	WHITE / orange
2	GREEN / white	ORANGE / white
3	WHITE / orange	WHITE/ green
4	BLUE / white	BLUE / white
5	WHITE / blue	WHITE / blue
6	ORANGE / white	GREEN / white
7	WHITE / brown	WHITE / brown
8	BROWN / white	BROWN / white

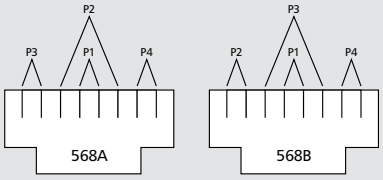

Pair 1 – BLUE/white & WHITE/blue
Pair 2 – ORANGE/white & WHITE/orange
Pair 3 – GREEN/white & WHITE/green
Pair 4 – BROWN/white & WHITE/brown

Euro and LJU6C modules are to be wired as follows

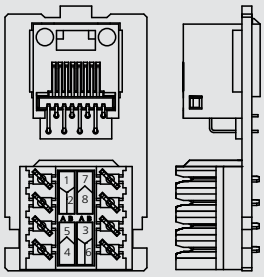

RJ45 Cat.5e Euro K5845

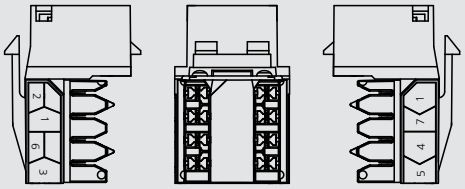

RJ45 Cat.5e Euro - Angled K5844

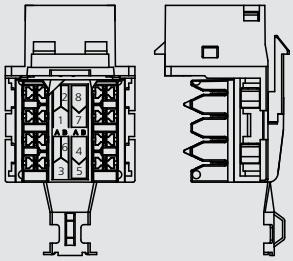

RJ45 Cat.6 Screened K5746S - LJU6C, K5846S - Euro

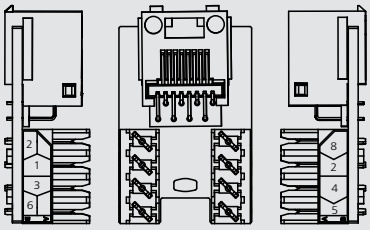

RJ45 Cat.5e LJU6C K5745

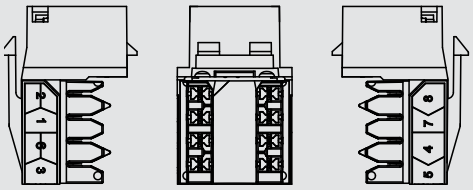

RJ45 Cat.6 Euro - Angled K5746 - LJU6C K5846 - Euro, K5864 - Euro Angled

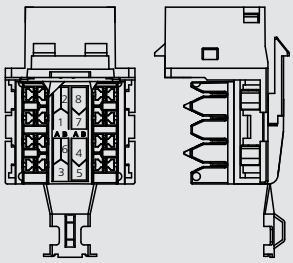

RJ45 Cat.5e Screened K5845S - Euro

Telephone, RJ11/12, BNC Data and Blank Modules

Standards and approvals

Telephone sockets K5820 and K5821 comply with the following:

BS 6312: 2.2

Data sockets K5801, BS 5733: 2010 (where applicable).

K5887 complies with FCC68 and EN 41003.

TECHNICAL SPECIFICATION

ELECTRICAL

CABLE TYPES
Telephone: CW1311, CW1293, CW1308, CW1316

NO. OF CABLES PER TERMINATION
Telephone: 2
RJ11/12: 1

BNC
50 Ohms impedance cable – RG58, RG141, URM43
Belden 9907

FREQUENCY RANGE
BNC connector: 0 to 4GHz

IMPEDANCE
BNC Connector: 50. nominal

TERMINATION TYPE
Telephone module – IDC
BNC module – Crimped connection

PHYSICAL

AMBIENT OPERATING TEMPERATURE
-5°C to +40°C

IP RATING
IP2XD – K5820, K5821, K5801 and K5787.
IP4X – K180, K188, K186 and K170

MAX. INSTALLATION ALTITUDE
2000 metres

Description

A range of telephone, data and blank modules to fit Euro and LJ6UC front plates. BNC Euro modules with a 50Ohm crimp connector suitable for use with RG58, URM43, URM76 and Beldon 9907 type co-axial cables are also available.

Installation (Telephone socket modules)

Product performance, systems compatibility

Master Sockets: For use as the first socket outlet on a direct exchange. They contain the required surge protector (for line protection against electrical surges) and ringing capacitor.

Secondary Sockets: for use as extension sockets when connected on the same line as a Master Socket.

Installation tools required IDC Connectors (telephone & RJ45 outlets)

MK insertion tool List No. 400NAT.
Wire pull-out force: 10.5 Newtons when installed correctly.

Wiring regulation restrictions

Domestic Installations: The total REN (Ring Equivalent Number) value of all telephone equipment connected on a line must not exceed 4.

FEATURES

- Meet all relevant BS and cabling standards
- Interchangeable modules clip into frontplates
- Front fixing facilitates easy exchange of modules
- Part of a complete range of products for telephone and data processing requirements

Telephone sockets

- Quick, simple and reliable IDC connectors
- Can be specified for all applications

Data sockets

- Latest specification for high performance systems
- Wide range of data connectors available

For information on TV Satellite and FM Modules see pages 471-473

Wiring Devices Technical

Telephone, RJ11/12, BNC Data and Blank Modules

Telephone Wiring Scheme

1 GREEN / white
2 BLUE / white
3 ORANGE / white
4 WHITE / orange
5 WHITE / blue
6 WHITE / green

Note: Main wire colour is shown in capitals

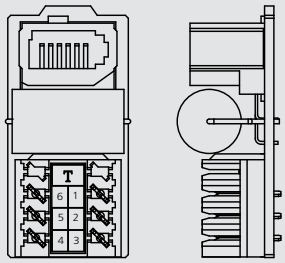

K5820

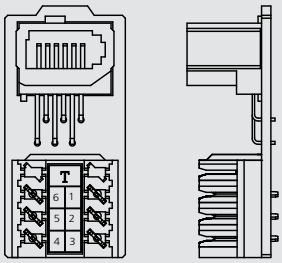

K5821

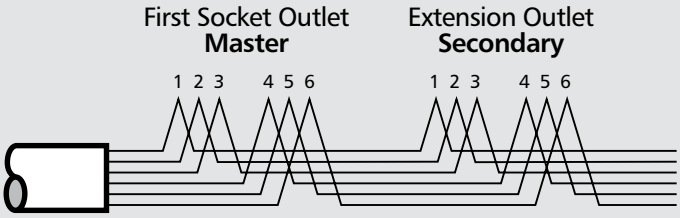

RJ11/12 Wiring Scheme

PIN NO.	STRIPPED COLOUR WIRE	SOLID COLOUR WIRE
1	WHITE / green	WHITE
2	WHITE / orange	BLACK
3	BLUE / white	RED
4	WHITE / blue	GREEN
5	ORANGE / white	YELLOW
6	GREEN / white	BLUE

Note: Main wire colour is shown in capitals

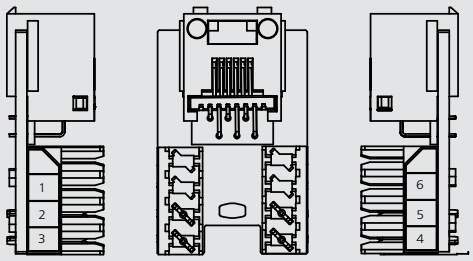

K5787

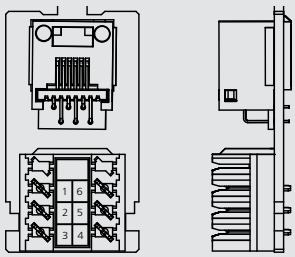

K5887

Telephone, TV/FM and Satellite Socket Outlets

Standards and approvals

Telephone and TV sockets comply with the following:

Telephone sockets K422 and K427

BS 6312: 2.2, BS 5733:2010 (where applicable).

K4817: BS 5733:2010 (where applicable) and FCC68.

TV sockets

BS 3041 Part 2:1977 / IEC 169-2:1977, BS 5733:2010 (where applicable) and IEC65, clauses 10.1, 10.3.

Satellite TV sockets

BS 5733:2010 (where applicable).

TECHNICAL SPECIFICATION

ELECTRICAL

TELEPHONE SOCKETS, CABLE SPECIFICATION
CW1311, CW1293, CW1308, CW1316

NO. OF CABLES PER TERMINATION
2

RE-USABILITY
>9 reterminations (should not be reterminated with smaller diameter wire)

TV SOCKETS
Cable specification: CT100 or equivalent Any standard

LOW-LOSS TV CO-AXIAL CABLE:
Outside 4-8mm diameter, inner conductor 0.5-2mm diameter

INSERTION LOSS
Insertion loss data available on request

'F' TYPE SATELLITE SOCKET (K3525), CABLE SPECIFICATION
Co-axial cable: inner core diameter – 0.5-1.2mm

RJ11 (K4817), CABLE SPECIFICATION
Capable of taking 0.08 to 0.65mm² solid or stranded cable

PHYSICAL

AMBIENT OPERATING TEMPERATURE
--5°C to +40°C

IP RATING
IP2XD

MAX. INSTALLATION ALTITUDE
2000 metres

Description

A part of the very wide range of products to meet the latest technical requirements and the standards applicable to modern technology in the installation of telephone and television equipment. The master and secondary telephone sockets K422 and K427 comply with relevant approvals for direct and indirect connections between a termination point of a public telecommunications system and any piece of approved telecommunications apparatus. For applications requiring twin or dual telephone outlets, refer to the Modular Data section, pages 46-48.

Telephone and TV sockets fit into plaster depth boxes (except for RJ11).

The F-type Satellite Socket may be used for connection of CATV, MATV and satellite TV installations.

FEATURES

- Single screw termination on TV outlets
- Protected, fully enclosed PCBs
- Meet all relevant BS requirements
- Quick, simple and reliable terminal connection
- IDC connectors on telephone outlets
- Part of a complete range of products for telephone, television and data processing requirements
- Angled connector on TV outlets
- Sockets fit in plaster depth boxes (except K4817)

Wiring Devices Technical

Telephone, TV/FM and Satellite Socket Outlets

Installation (Telephone sockets)

Product performance, systems compatibility

Master Sockets: for use as the first socket outlet on a direct exchange or PABX line. They contain surge protector (for line protection against electrical surges) and ringing capacitor.

Secondary Sockets

For use as extension sockets when connected on the same line as a Master Socket.

Installation tools required

MK IDC insertion tool List No. 400NAT (not supplied with product).

Wiring regulation restrictions

Domestic installations

Any number of MK sockets may be installed thereafter, with a total REN (Ring Equivalent Number) value of all telephone equipment connected on a line not exceeding 4.

Telephone Wiring Scheme

1 GREEN / white
2 BLUE / white
3 ORANGE / white
4 WHITE / orange
5 WHITE / blue
6 WHITE / green

Note: Main wire colour is shown in capitals

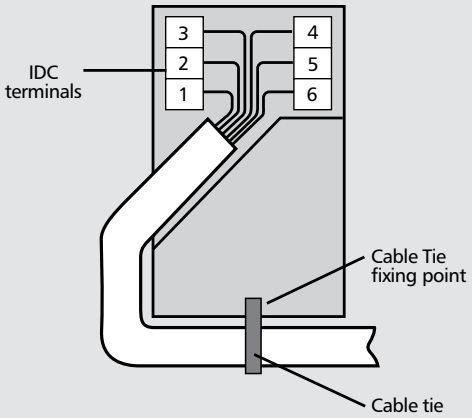

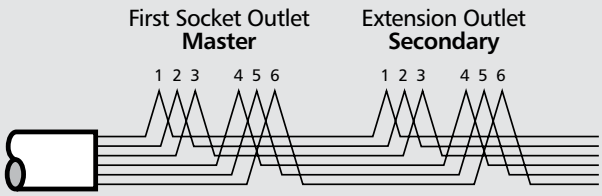

Digital TV and Telephone Outlets (Logic Plus and Modular Datacoms)

Installation (TV sockets)

Product performance, systems compatibility

Isolated Outlets are intended for use where safety isolation (rated at 2000V ac) is required to provide protection against faults occurring within any mains powered product used on different parts of the distribution system. They are not suitable for use in systems where DC signals are passed through the socket, (e.g. where masthead/headend equipment is controlled by receiver/decoder equipment).

Diplexer Outlets are used in distribution systems where both TV and FM band signals are combined on a single aerial downlead. The filtering in the diplexer separates the appropriate signals and feeds them through to the relevant output connection port.

Cable Routing and Use of Cable Clamp

Sharp bends in the cable must be avoided during installation. The single TV/FM socket is fitted with a cable clamp that can be fixed on either side of the termination position to facilitate this.

When tightening the screening braid clamps ensure that the cable is firmly gripped and that the inner insulation is not squashed flat beyond a slight oval shape.

Safety Information

TV outlets or modules must not be installed in the same enclosure as equipment rated in excess of 50V, (e.g. mains rated 13A sockets or switches).

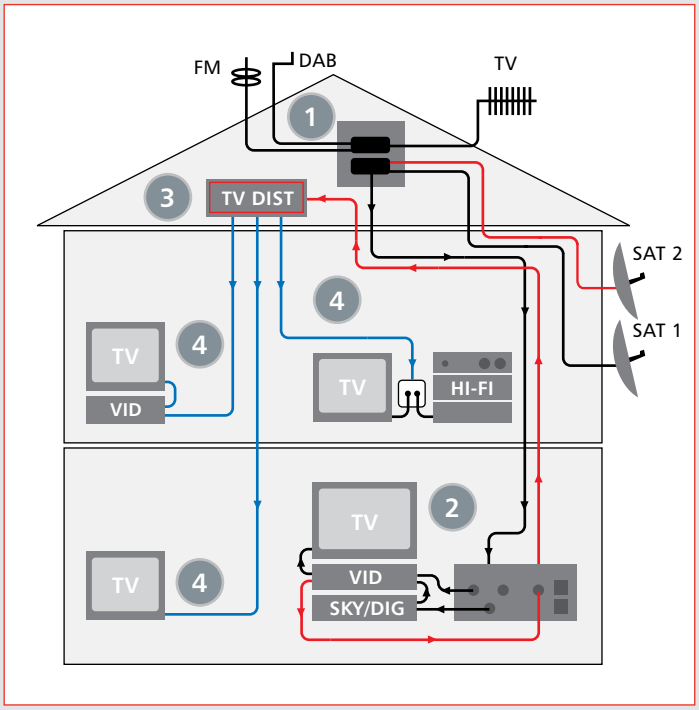

Method of installation of TV and FM aerial connection by using MK co-axial socket outlet and only one downlead.

Conventional distribution system for TV and FM signals using a single aerial downlead.

1. The signals from the TV and FM aerials and the satellite dish are combined together using two products. The first combines the TV and FM signals and the second adds the Sky signal to the TV/FM signal and provides a DC control path to power the LNB unit on the satellite dish. (These products are not supplied by MK).

   The single aerial down lead feeds into the triplexer (black lines in wiring diagram).

2. The separated satellite signal is then fed to the decoder. The decoded satellite signal is then fed into the VCR along with the TV signal from the Triplexer. The output signal from the VCR then feeds into the TV and also back to the single outlet and onto the distribution amplifier (black lines in wiring diagram).

3. The single cable back-feed then feeds back to the input of a multi way distribution amplifier, (typically located in the loft or garage) (red lines in wiring diagram).

4. Each individual output from the distribution amplifier is then fed to the individual rooms in the house to a standard TV (single or diplexer) outlet to which the TV/VCR and/or Hi-Fi can be connected (blue lines in wiring diagram).

Wiring Devices Technical

Digital TV, Radio and Telephone Outlets

Standards and approvals

All Logic Plus TV Outlets comply with BS 5733 and BS EN 50083 where applicable.

Also IEC 169-2, BS EN 60169-24 and BS 6312 Part 2

Modular products are Euro compatible.

TECHNICAL SPECIFICATION

SINGLE OUTLETS
TV/FM IEC Male or Female DC-950MHz
SATF-Type DC-1.75GHz

DIPLEXER AND TRIPLEXER PRODUCTS

TV
Diplexer:
5-65MHz
470-862MHz

Triplexer:
5-65MHz
470-862MHz

FM
Diplexer: 87.5-108MHz
Triplexer: 87.5-108MHz

SAT
Diplexer: n/a
Triplexer: 950-2300MHz

TV/FM/DAB/SAT PRODUCTS FOR DIGITAL RADIO

TV
Diplexer:
5-65MHz
470-862MHz

Triplexer:
5-65MHz
470-862MHz

FM/DAB
Diplexer: 87.5-230MHz
Triplexer: 87.5-230MHz

SAT OR SAT1
Diplexer: n/a
Triplexer: 950-2300MHz

SAT2
Diplexer: n/a
Triplexer: 5-2300MHz

Description

There are two ranges of diplexer and triplexer products, an established range suitable for VHF TV, and a range suitable for digital radio (DAB).

Diplexer modules are for connecting to a single co-axial aerial down lead carrying combined TV and FM signals. The filtering in the diplexer splits out the appropriate signal and feeds it to the relevant output connection.

A DC control path is provided in the TV signal path through the diplexer.

Triplexer modules are for connecting to a single co-axial aerial down lead carrying combined TV, FM and SAT signals. The filtering in the triplexer splits out the appropriate signal and feeds it to the relevant output connection.

A DC control path is provided in the SAT signal path through the triplexer.

The quad outlet contains a triplexer together with a separate satellite output, for use with Sky+, or more complex installations.

Telephone secondary outlets are provided on some products for connection of telephone or for interactive TV applications.

FEATURES

- Non Isolated
- Fully screened
- Earth terminal provided on TV modules
- Selected products with BT secondary outlets for interactive TV applications
- Selected products with supplementry TV outlet for back-feed for further distribution

BOX TYPES

FLUSH	FLUSH (FOR EXTRA WIRING SPACE)		SURFACE INSULATED	SURFACE METAL
1 GANG	861ZIC	866ZIC	K2140WHI	K2211ALM/K2213ALM
2 GANG	862ZIC	886ZIC	K2142WHI	K2212ALM/K2214ALM

Minimum recommended box depth 32mm
Note: Edge mounted modular products require 46mm box

Digital TV/FM and Telephone Outlets (Logic Plus and Modular Datacoms)

Installation

- When installing the TV co-axial cable ensure that all cable bends are smooth so that the inner insulation is not crushed or squashed, otherwise the TV signal quality may be affected
- Not suitable for loop-in loop-out installations
- Use CT100 cable (or equivalent)

TV Co-axial cable stripping details

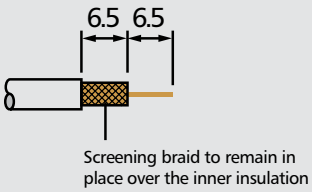

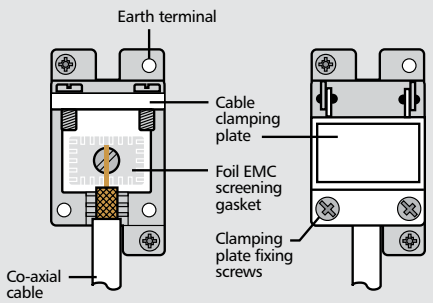

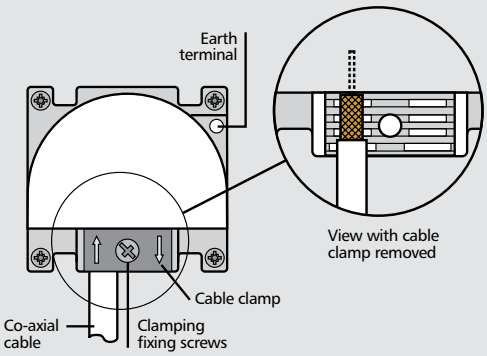

Telephone Outlet Connection

Carefully strip 50mm of the telephone cable outer sheath to expose the inner insulated conductors. Using the insertion tool supplied, (MK List no. 400NAT) carefully push each lead into the appropriate IDC terminals according to the wiring colour code stated in the telephone Wiring Scheme diagram.

Pins 1 and 6 are frequently unused, 4 wire cable may be used in these installations.

If an existing installation uses a different wiring colour code system, this should be retained on any new or extended installation.

Additional secondary extension outlets should be wired in parallel with the existing installation via the IDC terminals, (i.e. pin 1 to pin1, pin 2 to pin 2, etc).

In the event that the earth terminal is required to be used, the installer must ensure that a suitable earth conductor is present to connect to the earth terminal. (In the case of 2G products both TV modules should be earthed).

In the event that the earth terminal is required to be used, the installer must ensure that a suitable earth conductor is present to connect to the earth terminal. (In the case of 2G products both TV modules should be earthed).

Telephone Wiring Scheme

1 GREEN / white
2 BLUE / white
3 ORANGE / white
4 WHITE / orange
5 WHITE / blue
6 WHITE / green

Note: Main wire colour is shown in capitals

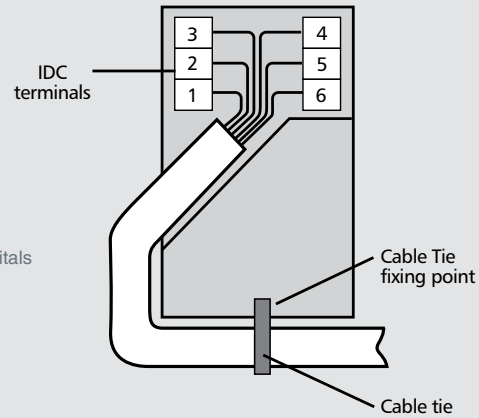

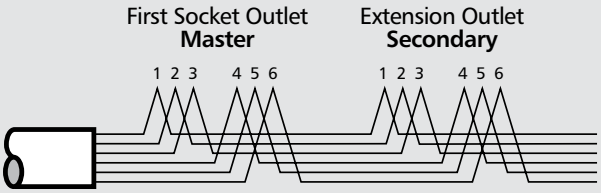

Wiring Devices Technical – Logic Plus™

Combination Plates 2/4-gang Stacked Combination Plate

4 Gang Plate Description

The 4-gang Combination Plate carries 2x 2-gang 13A DP switched sockets, plus a Quad TV, FM/DAB, Satellite outlet, single TV (IEC Female) and an additional Telephone socket.

Additionally, there is a 4-module Euro area capable of accommodating any additional telephone or media products from the Euro modular range.

TECHNICAL SPECIFICATION

FRONTPLATE
The frontplate complies with the mechanical strength requirements of BS 5733 2010.

SWITCHED SOCKET SPECIFICATION
Compliant to BS 1363 Part 2: 1995

ELECTRICAL

VOLTAGE RATING
250V a.c.

CURRENT RATING
13 Amp

TERMINAL CAPACITY
Live, Neutral & Earth
3 x 2.5mm²
3 x 4mm²
2 x 6mm² (standard)

PHYSICAL

AMBIENT OPERATING TEMPERATURE
-5°C to +40°C

IP RATING
IP2XD

MAX. INSTALLATION ALTITUDE
2000 metres

Note

- Pre-configured back boxes available shall be used with these plates. These are 853ZIC, which is 35mm deep, and for greater wiring space 854ZIC, which is 47mm deep
- These back boxes should always be used to ensure alignment of the fixing screws is correct and proper segmentation between mains and low voltage products is maintained
- Mains operated products and extra low voltage modules must not be installed within the same front plate aperture. Refers to BS 7671 IET Wiring regulations for detail
- When removing the fixing screws and front plate from an installation to gain access to low voltage modules, please be aware that there will also be access to the mains supply

Quad TV, FM/DAB, Satellite outlet & additional TV Socket

As used on K3566 WHI

BT Telephone Socket

As used on K3566 WHI

4-module Euro Housing

This portion of the plate accepts up to 4 x 50mm high by 25mm wide Euro modules. (100mm x 50mm aperture)

2 Gang Plate Description

The 2-gang Combination Plate carries a 2-gang 13A DP switched sockets and an additional 4-module Euro area capable of accommodating any additional telephone or media products from the Euro modular range.

TECHNICAL SPECIFICATION

FRONTPLATE
The frontplate complies with the mechanical strength requirements of BS 5733 2010.

SWITCHED SOCKET SPECIFICATION
Compliant to BS 1363 Part 2: 1995

ELECTRICAL

VOLTAGE RATING
250V a.c.

CURRENT RATING
13 Amp

TERMINAL CAPACITY
Live, Neutral & Earth
3 x 2.5mm²
3 x 4mm²
2 x 6mm² (standard)

PHYSICAL

AMBIENT OPERATING TEMPERATURE
-5°C to +40°C

IP RATING
IP2XD

MAX. INSTALLATION ALTITUDE
2000 metres

Note

- Pre-configured back boxes available shall be used with these plates. These are 853ZIC, which is 35mm deep, and for greater wiring space 854ZIC, which is 47mm deep
- These back boxes should always be used to ensure alignment of the fixing screws is correct and proper segmentation between mains and low voltage products is maintained
- Mains operated products and extra low voltage modules must not be installed within the same front plate aperture. Refers to BS 7671 IET Wiring regulations for detail
- When removing the fixing screws and front plate from an installation to gain access to low voltage modules, please be aware that there will also be access to the mains supply

Wiring Devices Technical – Aspect

Combination Plate

Standards and approvals

All Aspect 13A socket outlets comply with BS 1363: Part 2:1995.

K24209 and K24210 comply with BS 5733:2010.

TECHNICAL SPECIFICATION

ELECTRICAL

VOLTAGE RATING
250V a.c.

CURRENT RATING
13A

TERMINAL CAPACITY
Live, neutral & earth
3 x 2.5mm²
3 x 4mm²
2 x 6mm² (stranded)
(Dual earth terminals)

PHYSICAL

AMBIENT OPERATING TEMPERATURE
–5°C to +40°C

IP RATING
IP2XD

MAX. INSTALLATION ALTITUDE
2000 metres

MOUNTING BOXES

Combination Plate List Number	47mm Mounting Box
K24206	870ZIC
K24207	870ZIC
K24208	868ZIC
K24209	858ZIC
K24210	869ZIC

Bespoke requirements can be achieved through the MK Design Service to deliver variation in colours, materials, finishes and markings.

Euro apertures can also be converted to grid-switch. For more information please visit www.mkelectric.co.uk or call 01268 563720

Description

A range of combination plates designed for ease of installation and having all the advantageous design features of the Aspect range.

These combination socket outlets provide interior designers and installers with a stylish and practical wiring device solution. The range also has larger euro module frontplates to house eight and twelve single euro modules without the inclusion of fixed socket outlets. The K24209 combination socket outlet, for example allows for the inclusion of up to eight single Euro modules, which could include datacoms, telecoms, plus TV and Satellite modules.

Alternatively, Euro Power Modules i.e. German, French/Belgium and American socket outlets may be used.

Note:

- Pre-configured back boxes are designed for use with the combination plates. These back boxes should always be used to ensure alignment of the fixing screws is correct and proper segregation between mains and extra low voltage products is maintained
- For Aspect products, back boxes must be installed 10mm sub flush to the wall surface
- Mains operated products and extra low voltage modules must not be installed within the same frontplate aperture. Refer to BS 7671: 2008 for details
- When removing the fixing screws and frontplate from an installation to gain access to low voltage modules, please be aware that there will also be access to the mains supply

All pre-fitted sockets come complete and are fitted with two earth terminals on a common busbar to provide a double earth facility for use when installations require a high integrity protective connection as specified within BS 7671, IET Wiring Regulations.

Wiring Devices Technical – Aspect

Combination Plate

Features

- Metal-capped rockers designed to match the chosen front plate finish
- 3 pin operated safety shutter
- Printed terminal markings on grey rear mouldings for clearer identification
- Top access, angled terminals make wiring easier and quicker
- 3mm minimum switch contact gap
- Double pole switching
- Additional electrical safety from neutral 'make first', 'break last' feature
- Switch contacts with silver contacts on both surfaces for good continuity
- Dual earth terminals on pre-fitted sockets are for high integrity earthing
- Backed out and captive terminal screws on pre-fitted sockets
- Pre-configured backboxes to ensure alignment of the fixing screws is correct and proper segregation between circuits is maintained to comply with BS 7671 17th Edition wiring regulations

Installation

Aspect socket outlets can only be mounted on a wall. Do not mount or use as a trailing socket or where they may be subject to excessive moisture or dampness.

Install corresponding back box 10mm sub flush to finished wall surface.
Aspect combination plates are supplied with clip on segregator.

Dimensions (mm)

K24206 and K24207

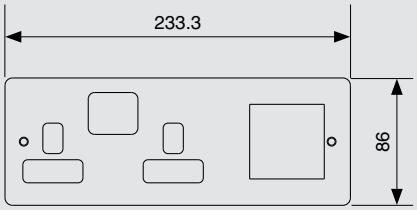

K24208

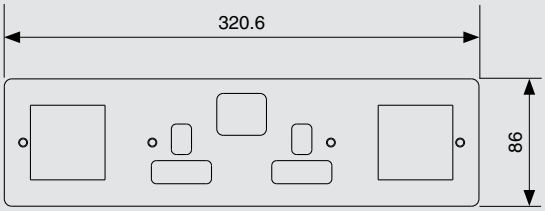

K24209

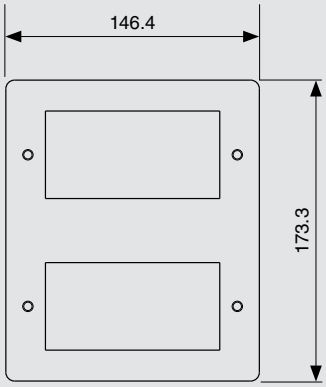

K24210

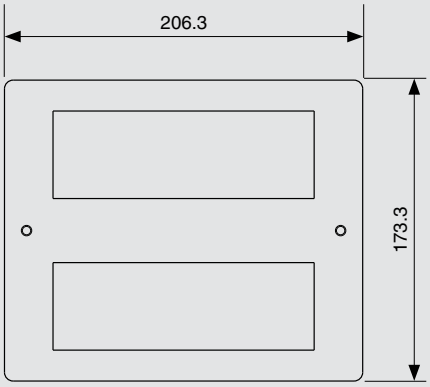

Wiring Devices Technical – Edge™

Combination Plate

Standards and approvals

All Edge 13A socket outlets comply with BS 1363: Part 2:1995.

K14209 and K14210 comply with BS 5733:2010.

TECHNICAL SPECIFICATION

ELECTRICAL

VOLTAGE RATING
250V a.c.

CURRENT RATING
13A

TERMINAL CAPACITY
Live, neutral & earth
3 x 2.5mm²
3 x 4mm²
2 x 6mm² (stranded)
(Dual earth terminals)

PHYSICAL

AMBIENT OPERATING TEMPERATURE
–5°C to +40°C

IP RATING
IP2XD

MAX. INSTALLATION ALTITUDE
2000 metres

MOUNTING BOXES

Combination Plate List Number	35mm Mounting Box	47mm Mounting Box
K14200	K14201	K14202
K14205	K14206	K14207
K14100	K14101	K14102
K14216		867ZIC
K14217		867ZIC
K14208		868ZIC
K14209		858ZIC
K14210		869ZIC

Bespoke requirements can be achieved through the MK Design Service to deliver variation in colours, materials, finishes and markings.

Euro apertures can also be converted to grid-switch. For more information please visit www.mkelectric.co.uk or call 01268 563720

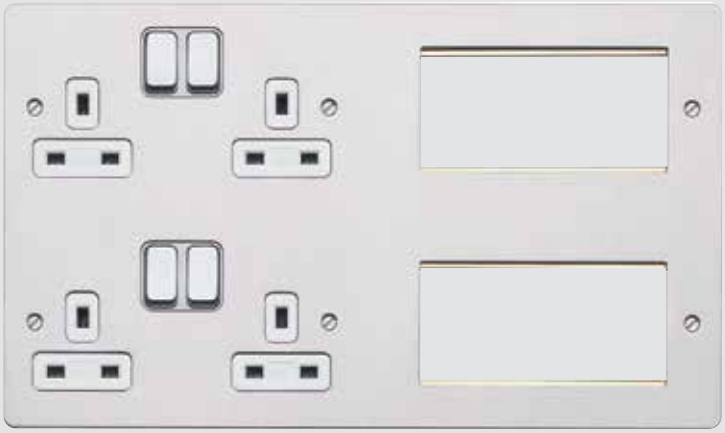

Description

A range of combination plates designed for ease of installation and having all the advantageous design features of the Edge range.

These combination socket outlets provide interior designers and installers with a stylish and practical wiring device solution. The range also has larger euro module frontplates to house eight and twelve single euro modules without the inclusion of fixed socket outlets. The K14100 combination socket outlet, for example allows for the inclusion of up to eight single Euro modules, which could include datacoms, telecoms, plus TV and Satellite modules.

Alternatively, Euro Power Modules i.e. German, French/Belgium and American socket outlets may be used.

Note:

- Pre-configured back boxes are designed for use with the combination plates. These back boxes should always be used to ensure alignment of the fixing screws is correct and proper segregation between mains and extra low voltage products is maintained
- For Edge products, back boxes must be installed flush to the wall surface
- Mains operated products and extra low voltage modules must not be installed within the same frontplate aperture. Refer to BS 7671: 2008 for details
- When removing the fixing screws and frontplate from an installation to gain access to low voltage modules, please be aware that there will also be access to the mains supply

All pre-fitted sockets come complete and are fitted with two earth terminals on a common busbar to provide a double earth facility for use when installations require a high integrity protective connection as specified within BS 7671, IET Wiring Regulations.

Combination plates allow the use of a variety of power and data modules making them ideal for hotels.

Wiring Devices Technical – Edge™

Combination Plate

Features

- Metal-capped rockers designed to match the chosen front plate finish
- 3 pin operated safety shutter
- Printed terminal markings on grey rear mouldings for clearer identification
- Top access, angled terminals make wiring easier and quicker
- 3mm minimum switch contact gap
- Double pole switching
- Additional electrical safety from neutral 'make first', 'break last' feature
- Switch contacts with silver contacts on both surfaces for good continuity
- Dual earth terminals on pre-fitted sockets are for high integrity earthing
- Backed out and captive terminal screws on pre-fitted sockets
- Pre-configured backboxes to ensure alignment of the fixing screws is correct and proper segregation between circuits is maintained to comply with BS 7671 17th Edition wiring regulations

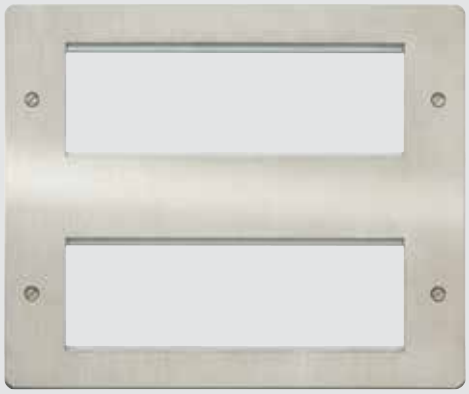

Installation

Edge socket outlets can be mounted on either a wall or suitable bench mounted trunking. Do not mount or use as a trailing socket or where they may be subject to excessive moisture or dampness.

Dimensions (mm)

K14216 and K14217

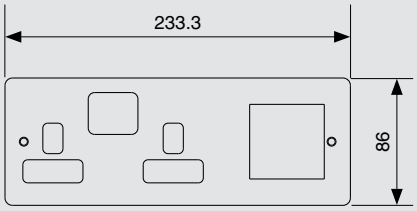

K14200

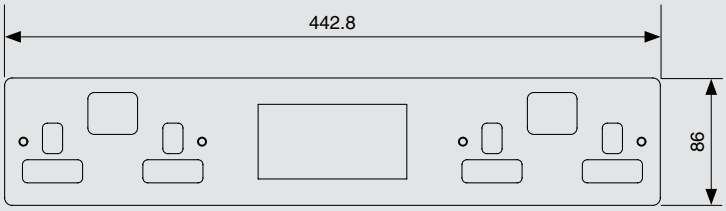

K14209

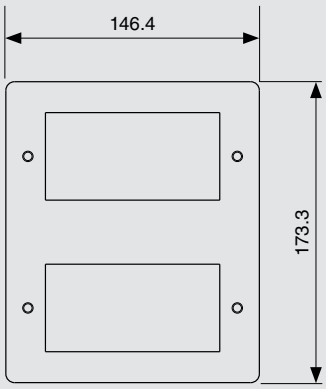

K14210

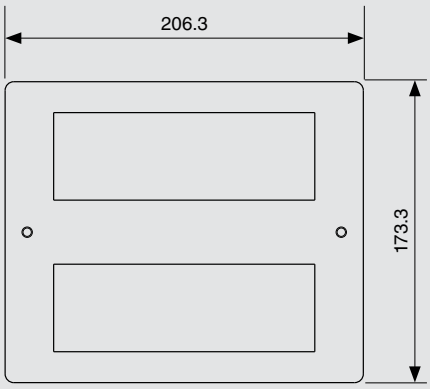

K14100

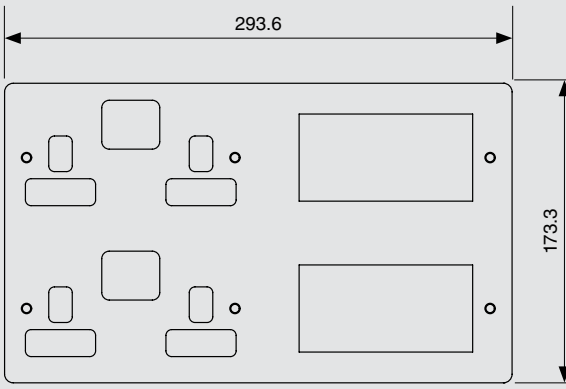

K14208

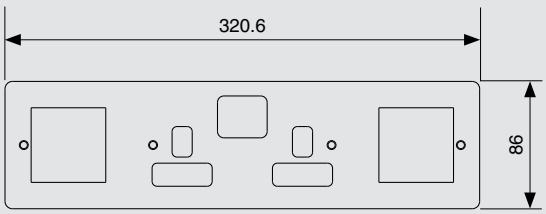

K14205

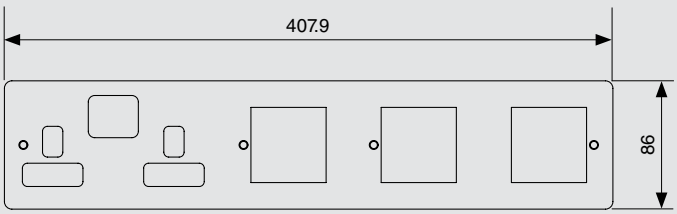

Key Operated Switchsocket Outlet

Standards and approvals

All Edge 13A socket outlets comply with BS 1363: Part 2:1995.

TECHNICAL SPECIFICATION

ELECTRICAL

VOLTAGE RATING
250V a.c.

CURRENT RATING
13A

TERMINAL CAPACITY
Live, neutral & earth
3 x 2.5mm²
2 x 4mm²
1 x 6mm² (stranded)
(Dual earth terminals)

PHYSICAL

AMBIENT OPERATING TEMPERATURE
–5°C to +40°C

IP RATING
IP2XD

MAX. INSTALLATION ALTITUDE
2000 metres

Description

The Key Operated 13 amp socket is designed for ease of installation and has all the design features of the Edge range. The built-in lock ensures that power cannot be provided without key operation making it ideal for communal areas such as hotel lobbies. The key can be removed from the lock in the on or off position leaving the socket with or without power supply.

The product can be quickly installed as replacement for existing 2 gang 13 amp sockets or in a new installation (assuming suitable 47mm deep mounting box is in position).

Installation

Edge socket outlets can be wall or bench mounted. Do not mount or use as a trailing socket or where they may be subject to excessive moisture or dampness.

Features

- Built in lock ensures power cannot be provided without key operation
- Printed terminal markings on grey rear mouldings for clearer identification
- Double pole switching
- Only one size of screwdriver required for installation
- Dual earth terminals for high integrity earthing

Note: The lock fitted to each socket is universal. i.e. a common key profile. However, the keys are different to those used on MK Key Operated Fire Alarm Isolator Switches, for added security.

Wiring Devices Technical – Edge™

Edge™ Technical: General information

Mounting Boxes

Due to the slimline design MK Edge accessories require deeper back boxes than standard. They are designed to fit into folded metal boxes that comply with BS 4662. To ensure products can be correctly installed, the box must always be installed flush or sub flush to the surface to a maximum depth of 6mm.

The recommended depth of boxes for the different types of wiring accessories are as follows:

MOUNTING BOXES	
Product	**Box Depth**
Socket Outlets	35mm
Lockable Socket	47mm
Lockable Switch	47mm
German style 2 pole + E Socket Outlet mounted in Euro Frame	47mm
Connection Units	47mm
Plateswitches	35mm
Grid System Switches*	35mm
Dimmer Switches	35mm
Telephone, Television and Data Outlets	35mm
Cooker Control and 50A Switches	47mm
Shaver Supply Units	47mm
32A Triple Pole and Neutral Switch	List no. 5268ALM

*Note: If Grid system accessories are to be fitted and the installation requires the attachment of conduit via nuts inside the mounting box, then it is recommended that a box depth of 47mm is used.

Fixing Screws

The surface head of Edge fixing screws is treated and compliment the finish of the frontplate. To prevent damage to the fixing screw extreme care is required. It is recommended that a screwdriver with a maximum blade of 3.5mm is used.

Wiring Devices Technical – Aspect

Aspect Installation

The MK 'Aspect' range of products consists of the main product complete with its support frame and clipping medium, plus a separate frontplate. The product is mounted to the wall, after wiring, and the front plate clipped onto the frame.

1. The frontplate is supplied loose to aid installation.
2. Make sure not to crush or deform the spring steel clips situated along one edge of the product support frame.
3. A gasket is also supplied with each product, which may prove useful on uneven walls. See note 5 below.
4. Using the gasket with all switches and the German socket, will ensure full compliance with the appropriate standards.
5. Both standards set out to guarantee full engagement of the frontplate on uneven surfaces, even when there is a mismatch of as much as 1mm between the distance the main body of the product is from the wall and that of the front plate.
6. Where no gasket is used, if thick wallpapers are cut such that they fit around the support frame and therefore remain under the edge of the frontplate, full plate engagement with the clips may be restricted.

Note: When installing Aspect do not over tighten screws, so as to prevent damage or distortion to the product or support frame.

FIGURE 1A

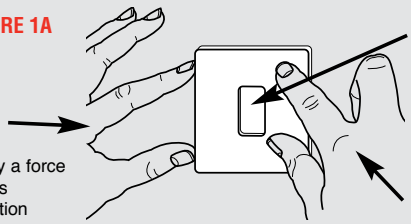

FIGURE 1B

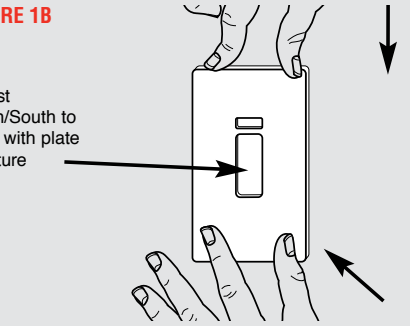

Frontplate Removal

1. Turn off the power supply.
2. Carefully slide a screwdriver between the ramp on the main body of the product and the notch in the lower right hand edge of the plate.
3. On uneven walls, make sure the screwdriver does not go between the spring steel ramp and the wall, or damage to the wall and/or product could result.
4. Carefully slide the blade upwards and then gently lift the handle away from the wall, which will lever the plate away from the first clip. See Fig.4.
5. With the first clip released, support the plate with one hand and continue to move the blade to the left under.

Data products in euromounting frames

Products operating at extra low voltage levels (<50v) must not be mounted in the same Euro enclosures as equipment rated in excess of 50v.

Cleaning Frontplates

In order to protect the quality surface finish of the front plate, periodic cleaning should only consist of polishing with a dry lint free soft cloth.

Frontplate Installation

FIGURE 2

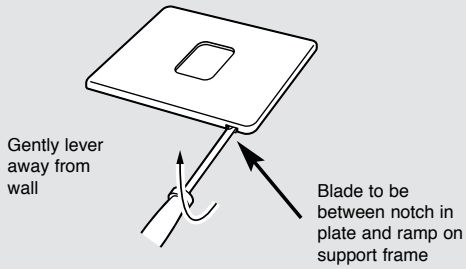

FIGURE 3

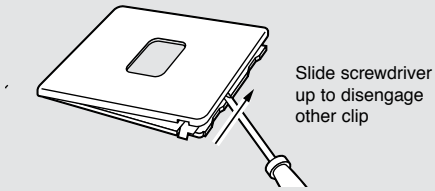

FIGURE 4

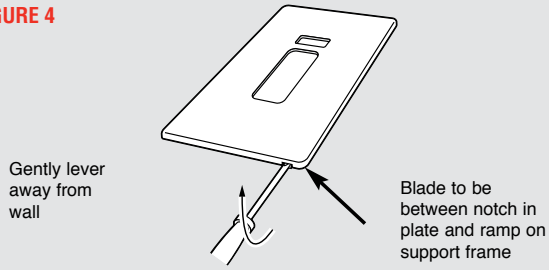

FIGURE 5

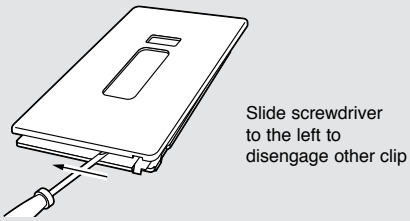

Frontplate Removal

For a full range of corresponding products, see pages 98-128 in the product selector.

Wiring Devices Technical

Decorative Technical: General information

Earthing: All Metal Frontplate Products

To comply with the latest edition of the BS 7671 IET regulations: the metal front plate must be earthed. All earth terminals provided must be connected to the protective earth conductor.

Telephone Secondary and Data Sockets

To provide customers with a high level of flexibility the voice and data decorative wiring devices are available in modular formats.

For example to produce a Telephone Secondary Socket the following items are required:

RANGE	PRODUCTS REQUIRED	
Albany Plus	K181	K5821
Aspect	K24181	K5821
Edge	K14181	K5821

Or

RANGE	PRODUCTS REQUIRED		
Albany Plus	K182	K5821	2 x K186
Aspect	K24182	K5821	2 x K186
Edge	K14182	K5821	2 x K186

Simple Fit Switching PIR Sensors

TECHNICAL SPECIFICATION

TECHNOLOGY
PIR

MAXIMUM RECOMMENDED MOUNTING HEIGHT
1.8m to 3m

RANGE
Cone-shaped detection pattern,
6m radius at 2.5m mounting height

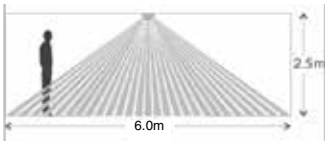

OPERATING VOLTAGE
AC220~240V/50Hz

RECOMMENDED CIRCUIT PROTECTION
16A

MAXIMUM LOAD
6A or 600W fluorescent lightling load capacity

PHOTOCELL
Approx. 5 - 1000 Lux

OFF DELAY
5sec - 18min

COLOUR
White (RAL9010)

MATERIAL/ABS
Flame retardant PC

IP RATING
Surface Mount: IP44
Flush Mount:
IP44 (Sensor section only)
IP20 (Ceiling Board onwards)

K5017

DEPTH REQUIRED BEHIND CEILING
50mm

WEIGHT
269g

SWITCHABLE LOAD

	Max 2000W
	Max 600W
	Max 500W
	Max 120W
	Max 110W
	Max 75W

For a full range of corresponding products, see pages 63-66 in the product selector.

Description

MK Simple Fit Sensors offer cost effective presence detection for lighting control in small to medium areas. This one-box solution is easy to install and commission, and requires no additional parts. Providing cost effective presence detection for lighting control. Simple Fit dual mount sensors are easy to install and can deliver energy savings of up to 70%*

FEATURES

- Presence detection by passive infrared
- Innovative dual mount system requires only one sensor for either flush or surface mount applications
- External programming dials enable quick adjustment of time and lux levels
- Off delay adjustable between 5 seconds and 18 minutes following the last observed movement after which the lights switch off
- PIR Lens provides 360 degree detection
- Detection Range of up to 6m diameter at 25°C at 2.5m mounting height
- Manual on / off override function
- Mounting Height: Recommended ceiling mount 1.8m to 3m
- Loading up to 6 Amps
- Ability to wire more than 1 sensor in parallel to a load
- Ability to switch volt free loads
- Lens mask included to mask out any areas of unwanted detection

K5017
Flush and Surface Ceiling Mount PIR Sensor in one

- For flush mount, spring clips enable ease of installation in ceilings with thickness between 5mm and 20mm
- Simple to switch between flush and surface options
- Surface mount can be fixed direct to the ceiling or on to a circular conduit or BESA box
- All screws and fixings supplied

Dimensions (mm)

Flush Mount (Hole size 75mm to 80mm)

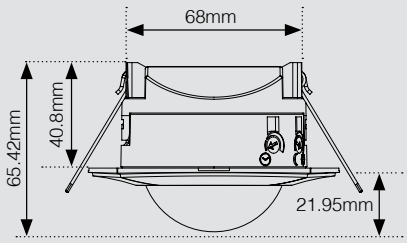

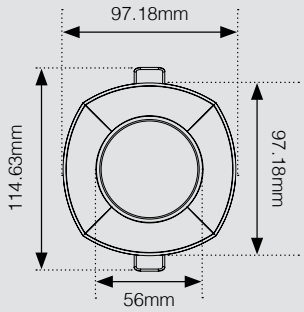

Surface Mount

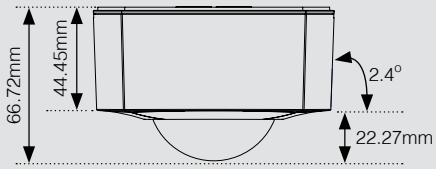

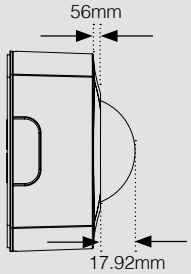

Sensors Technical

Simple Fit Switching PIR Sensors

TECHNICAL SPECIFICATION

TECHNOLOGY
PIR

MAXIMUM RECOMMENDED MOUNTING HEIGHT
1.8m to 3m

RANGE
Cone-shaped detection pattern,
6m radius at 2.5m mounting height

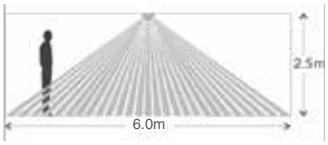

OPERATING VOLTAGE
AC220~240V/50Hz

RECOMMENDED CIRCUIT PROTECTION
16A

MAXIMUM LOAD
6A or 1500W fluorescent/incadescent lightling load capacity

PHOTOCELL
Approx. 30~200 Lux

OFF DELAY
5sec - 40min

COLOUR
White

MATERIAL
Flame retardant PC

IP RATING
IP20

K5015

DEPTH REQUIRED BEHIND CEILING
100mm

WEIGHT
105g excluding cable

K5016

WEIGHT
105g approx

K5015

K5016

Description

MK Simple Fit Sensors offer cost effective presence detection for lighting control in small to medium areas. These one-box solutions are easy to install and commission, also no additional parts are required.

The following versions are available:

- Flush mounted K5015 – Spring Clips enable ease of installation in plasterboard ceilings
- Surface Mounted K5016 – Screw and Plug Fixings can be mounted direct to the ceiling or on to a square pattress box (K2160 WHI)

FEATURES

- Advanced presence detection by passive infrared (PIR) technology
- Passive photocell holds lights off when area becomes occupied in bright ambient conditions
- Off delay in minutes following the last observed movement after which lights switch off
- Detection pattern and approx range in metres at floor level for 2.5m mounting height (detection pattern is cone shaped).

Dimensions

K5015

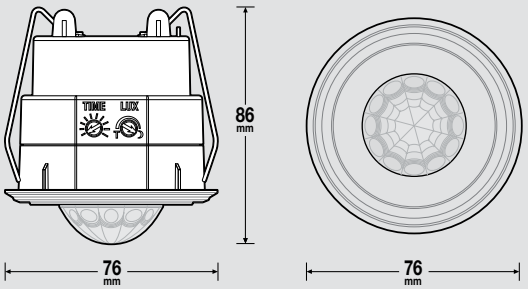

K5016

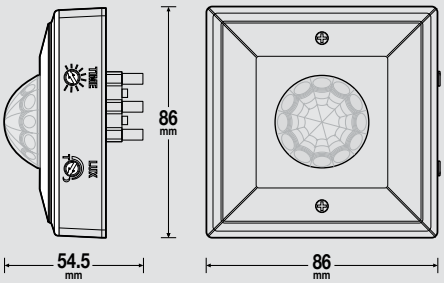

Superior Switching PIR Sensors

TECHNICAL SPECIFICATION

TECHNOLOGY
PIR

DETECTION RANGE
10m Macro / 7m Micro at 2.5m mounting height

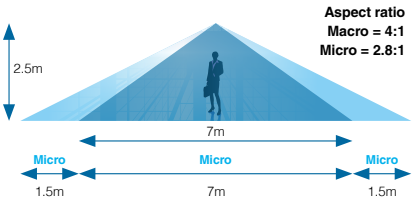

SWITCHING CAPACITY
10A (Tungsten 6A)

PHOTOCELL RANGE (LUX)
Adjustable 10 to 1000 lux via K4098

DELAY TIME RANGE
Adjustable 5mins to 40 mins via K4098

IP RATING
IP4X

SUPPLY VOLTAGE
Mains 230V

TEMPERATURE RANGE
0-40 degrees

ACCESSORIES
K4098 Infrared programming tool required to adjust sensor settings

K5030F

K5030SM

Description

A range of high performance switching PIR sensors for dependable switching of lighting loads.

FEATURES

- High definition lenses, performance optics and software are all optimised to provide class leading sensitivity and occupancy detection ensuring that the lights are always on when required
- Superior switching sensors include integral adjustable active photocells which will hold the lights off in occupied areas or switch them off at a given light level
- Superior switching sensors deliver highly sensitive micro detection diameter of 7m within a 10m macro detection diameter (When installed at a mounting height of 2.5m)
- Colour coded connectors make superior switching sensors easy to install and reduce wiring faults
- The easy to use K4098 infrared programming tool simplifies sensor set up and commissioning

Flush Mount

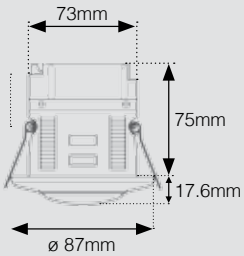

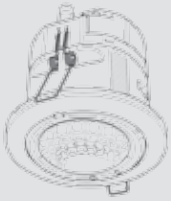

Surface Mount

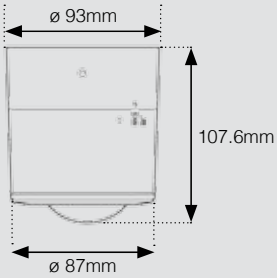

Sensors Technical

Superior PIRs for DALI or DSI Dimming

K5040F

K5040SM

TECHNICAL SPECIFICATION

TECHNOLOGY
PIR

DETECTION RANGE
10m Macro / 7m Micro at 2.5m mounting height

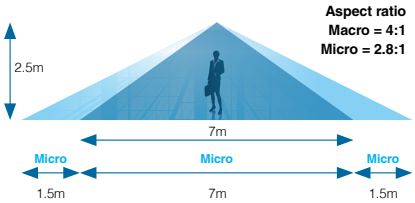

SWITCHING CAPACITY
10A (Tungsten 6A)

DIGITAL DIMMING
DALI or DSI (Auto detect)

ANALOGUE DIMMING
1-10V

PHOTOCELL RANGE (LUX)
Adjustable 100 to 1000 lux via K4098

DELAY TIME RANGE
Adjustable 5mins to 40mins via K4098

IP RATING
IP4X

SUPPLY VOLTAGE
Mains 230V

TEMPERATURE RANGE
0-40 degrees

ACCESSORIES
K4098 Infrared programming tool required to adjust sensor settings

Description

A range of high performance PIR sensors for dependable control of digital dimming lighting loads.

FEATURES

- High definition lenses, performance optics and software are all optimised to provide class leading sensitivity and occupancy detection ensuring that the lights are always on when required
- Dimming sensors include integral photocells which will hold the lights off in occupied areas or switch them off at a given light level. Regulating photocells enable a constant light level to be maintained through digital dimming
- Superior PIR sensors deliver highly sensitive micro detection diameter of 7m within a 10m macro detection diameter (When installed at a mounting height of 2.5m)
- Automatic detection of DALI and DSI digital dimming type luminaires reduces commissioning time and the potential for errors
- The easy to use K4098 infrared programming tool simplifies sensor set up and commissioning

Flush Mount

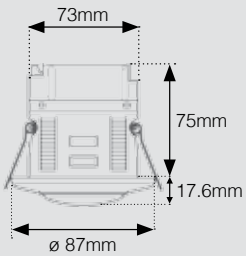

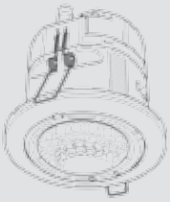

Surface Mount

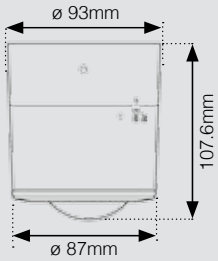

Battenfit Switching PIR Sensor

K4047

TECHNICAL SPECIFICATION

MAXIMUM RECOMMENDED MOUNTING HEIGHT
5.0m

RANGE
Cone-shaped detection pattern,
diameter (at floor level) = 2.4 x mounting height

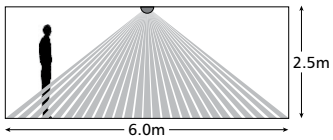

OFF DELAY
1 minute – 40mins
10 second walk test mode

PHOTOCELL
Adjustable 50-5000 lux

OPERATING VOLTAGE
230V 50Hz

RECOMMENDED CIRCUIT PROTECTION
10 Amps

MAXIMUM LOAD
2A

COLOUR
White

MATERIAL
Flame retardant PC/ABS

WEIGHT
100g

IP RATING
IP65

ACCESSORIES
K4098 Infrared programming tool required to adjust sensor settings

Description

Ideal for retrofit installations, the BattenFit sensor is a simple-to-fit control solution for batten style luminaires which can deliver energy savings of up to 70%

FEATURES

- Advanced presence detection by passive infrared (PIR) technology
- Off delay in hours following the last observed movement after which lights switch off
- Passive photocell holds lights off in bright ambient conditions. Active photocell has the capability to switch lights off in occupied areas
- Detection pattern and range in meters under normal operating conditions
- One Switch Manual input to turn luminaires on or off
- Infrared programming enables easy commissioning and re-commissioning via K4058
- IP65

Dimensions (mm)

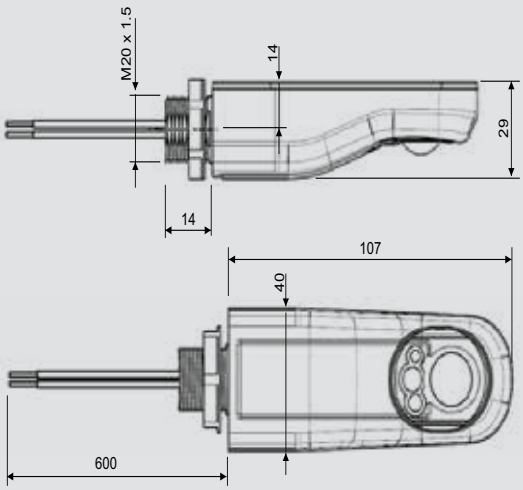

Detection Profile

Plan View
Detection pattern is a 360° cone shape. Diameter is 2.25 x the mounting height.

The squares show the arrangement of the detection pattern. Sensitivity is greater when approaching at a tangent rather than heading towards the centre.

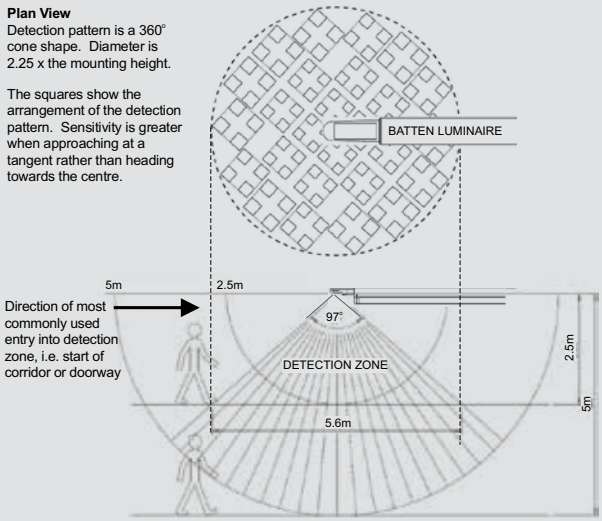

Direction of most commonly used entry into detection zone, i.e. start of corridor or doorway

Sensors Technical

Ultrasonic Sensors

TECHNICAL SPECIFICATION
OPERATING VOLTAGE 230V 50Hz
MAXIMUM RECOMMENDED MOUNTING HEIGHT 5 metres
SWITCH CAPACITY 10 Amps – Incandescent lamps: 1500W max (230V)
TERMINAL CAPACITY 2 x 1.5mm or 1 x 2.5mm
WEIGHT 148g
TIME DELAY 5, 10 or 15 mins
POWER-UP CONDITION select on or off
DETECTOR RANGE adjustable
ON/OFF RANGES: adjustable
ULTRASONIC FREQUENCY 40kHz
PHOTOCELL adjustable 50 to 5000 lux

K4030

K4031

Features

- Active presence detection by ultrasonic technology
- Passive photocell holds lights off in bright ambient conditions
- Off delay in minutes following the last observed movement after which the lights switch off
- Detection pattern and range in metres under normal operating conditions

Description

Ultrasonic sensors are general purpose, fully automatic, directional presence detectors with photocell. They save energy by switching off lights in unoccupied areas and by holding lights off in occupied areas which have adequate natural light. They use a specially developed ultrasonic radar to monitor the controlled space for movement. This radar is sensitive enough to respond to even very small movements thus ensuring that lights are sustained whenever the controlled space is occupied. If no movement has been detected for a pre-selected period, the sensors switch the lights off until the next visitor is detected.

The sensors control feature a movement detector, photocell and 10 Amp load switching element in one easily deployed housing. The technology has been refined and improved over many years of efficient, reliable service in a wide range of industrial and commercial environments. The latest designs use state-of-the-art miniaturisation to pack the features into a small, attractive yet rugged enclosure which gives full field-of-view adjustment. Detectors are available for surface or semi-flush mounting.

Dimensions

K4030 – Surface version

The back-box can be secured directly to a hard surface or to a conduit stop end box.

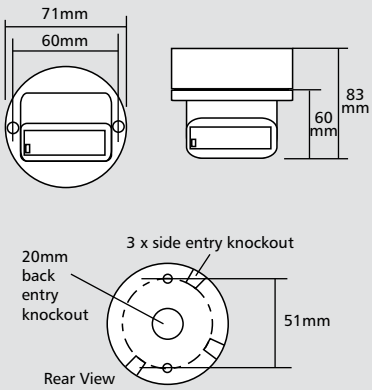

K4030 – Semi Flush version

Use a hole saw to drill a 76mm hole into the ceiling tile. The flush ring is designed to clamp the tile between its two halves.

Flush Plate & Clamp (K4078)
For simple flush mounting of detector to suspended ceilings.
Max clamping distance – 25mm

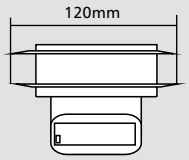

A sensor will fit to its own backplate or to a standard 25mm switch sinking box.

Ultrasonic sensors utilise ultrasonic radar to monitor a space for movement. This involves transmitting an ultrasound signal and examining the reflected signal for frequency variations called “doppler shifts”. The transmitted signal is more quickly dissipated in open space and squeezed out by constraining walls and ceilings. The range of the detector also depends upon the type of movement being observed: for example, walking activity can be observed at a greater distance than the slight hand or body movement to be expected from a person working at a desk. Note that detectors can see behind themselves slightly so must be inset in a storage aisle or corridor application.

Hand-Held Programming Tools

TECHNICAL SPECIFICATION

TRANSMISSION METHOD
Infrared

RANGE
15m approx

BATTERY
3Vdc CR2032 Lithium Button Cell

EXPECTED BATTERY LIFE
3 years

STORAGE TEMPERATURE
-25˚C to +70˚C

OPERATING TEMPERATURE
0˚C to 40˚C

IP RATING
4X

APPROVAL
CE

DIMENSIONS
K4058:87mm (H) x 40mm (W) x 7mm (D)
K4059:100mm (H) x 50mm (W) x 7mm (D)

WEIGHT
20g approx

K4058

K4059

Description

MK sensors* feature a range of programmable parameters which can be adjusted using a simple, low cost hand-held programming controller.

*Not including Simple fit

FEATURES K4058

- 3 simple time-delay settings (5 minutes/10 minutes/20 minutes)
- Presence detection mode
- Absence detection mode
- Enable/disable photocell
- Walk-test feature

FEATURES K4059

- 4 simple time-delay settings (5 minutes/10 minutes/20 minutes/40 minutes)
- Presence detection mode
- Absence detection mode
- Enable/disable photocell
- Walk-test feature
- Set regulating light level - when used in conjunction with a suitable lux meter
- Restore button functionality - press & hold reverts to factory default, short press reverts back to last configuration
- Lamp burn-in

Ceiling Accessories Technical

Ceiling Switches

Standards and approvals

3164WHI fully complies with the 17th Edition Wiring Regulations (BS 7671:2008 with respect to safety isolation for maintenance purpose. Conforms to BS EN 60669-1:1999

3151WHI, 3190WHI, K3191WHI, K3192WHI, K3131WHI, K2051WHI, K2056WHI, conform to BS EN 60669-1:1999

TECHNICAL SPECIFICATION

ELECTRICAL

VOLTAGE RATING
250V a.c.

MAXIMUM RATING
See range details

Note: Switches do not have to be derated when used with resistive or fluorescent loads

TERMINAL CAPACITY

K3131, 3190, K3191, K3192
4 x 1.0mm²
3 x 1.5mm²

3151
4 x 2.5mm²
2 x 4.0mm²
1 x 6mm²

3164
4 x 4mm²
3 x 6mm²
1 x 10mm²
1 x 16mm²

K2051/K2056, Earth Terminal
6 x 1mm²
4 x 1.5mm²
2 x 2.5mm²
1 x 4mm²
1 x 6mm²

PHYSICAL

AMBIENT OPERATING TEMPERATURE
–5°C to +40°C

IP RATING
IP3X

MAX. INSTALLATION ALTITUDE
2000 metres

Installation

MK ceiling accessories are safe for use in all normal lighting applications. Do not mount them where they may be subjected to excessive moisture or dampness.

Wiring

Products must be installed in accordance with BS 7671:2008.

Description

A range of 6 and 16 Amp ceiling switch options plus a 50 Amp DP flush mounted ceiling switch.

Features

- Mounting blocks have an earth terminal rivetted into their bases
- 3190RCWHI has a retractive (momentary) switch action and can be wired as either pull to make or pull to break
- 3190RCWHI has a red pull cord
- Ceiling switches with standard white cords are 1.5m minimum length, and with standard red cords are 2m minimum length
- K3191, K3192 and K3131 have self locating feature when used with mounting block, to aid installation
- Ceiling switches with white cords **and bangles** are 2m minimum length, and with red cords **and bangles** are 3m minimum length
- 3164WHI is fitted with mechanical OFF indicator
- 3164 has a full 3 mm contact gap
- 3164 may be surface mounted

Dimensions (mm)

K3191WHI/ K3192WHI

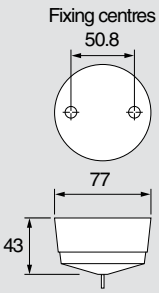

3190RCWHI

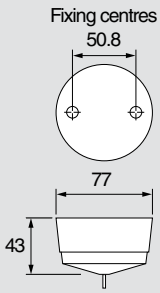

K3131WHI

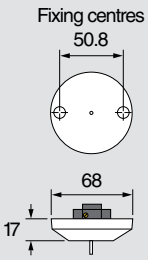

3164WHI

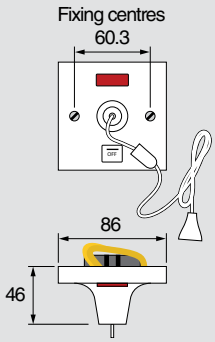

3151WHI

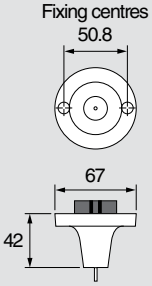

K2051WHI

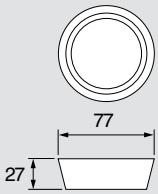

K2056WHI

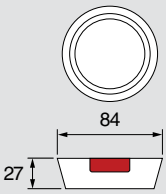

For a full range of corresponding products, see pages 53-56 in the product selector.

Ceiling Roses and Pendants

Standards and approvals

Heat resistant lampholders comply with BS EN 61184:1997 T2

All ShockGuard lampholders comply with BS 7895:1997 and BS EN 61184:1997 T2

Ceiling roses comply with BS 67:1987

Pendant sets are supplied with heat resisting PVC insulated and sheathed flexible 0.75 two core circular cable complying with BS EN 50525 (H05V2V2-F)

Ceiling Rose

Pendant

TECHNICAL SPECIFICATION

ELECTRICAL

LAMPHOLDERS AND BATTEN LAMPHOLDERS

VOLTAGE RATING
250V a.c.

MAXIMUM RATING
150 watts

TERMINAL CAPACITY
Live, neutral & earth
3 x 1.0mm²
2 x 1.5mm²

CEILING ROSES & BASE OF PRE-WIRED BATTEN LAMPHOLDERS

VOLTAGE RATING
250V a.c.

MAXIMUM RATING
6 amps

TERMINAL CAPACITY
Live, neutral & earth
4 x 1.0mm²
3 x 1.5mm²
1 x 2.5mm²

PHYSICAL

AMBIENT OPERATING TEMPERATURE
–5°C to +40°C

IP RATING
IP4X

MAX. INSTALLATION ALTITUDE
2000 metres

Description

The range includes ShockGuard™ SG type lampholders, pendant sets, batten lampholders and ceiling roses.

Features

ShockGuard™

- Automatically shields the contacts as soon as the lamp is removed
- The contacts remain shielded until a new lamp is slotted into place
- While there is no lamp in place there is no danger of electrocution

Ceiling roses

- Clear base and pre-cut aperture for ease of installation
- Clear markings
- Terminal layout allows cables to be cut to even length
- Earth terminal point used for easier cable access
- Halo (K1163WHI) available to give professional finish on damaged ceilings (for use with ceiling roses and pendant sets only)

Dimensions (mm)

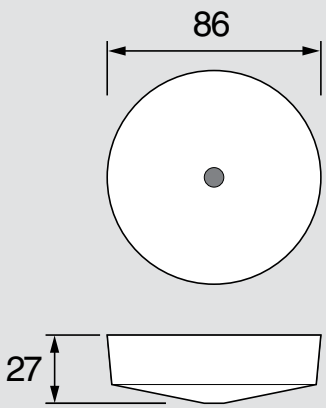

Ceiling Accessories Technical

Lampholders and Shockguard type Lampholders

Dimensions (mm)

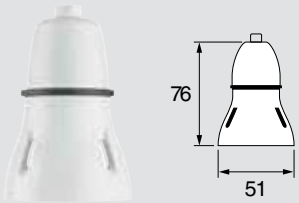

Standard Lampholder with protective skirt

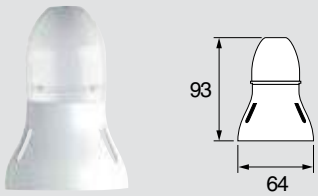

SG Type Lampholder with protective skirt

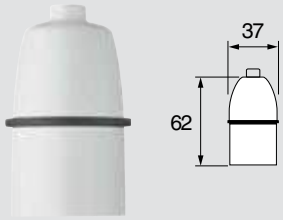

Standard Lampholder

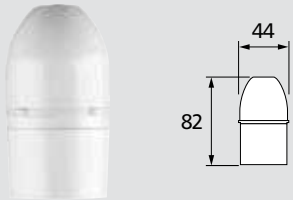

SG Type Lampholder

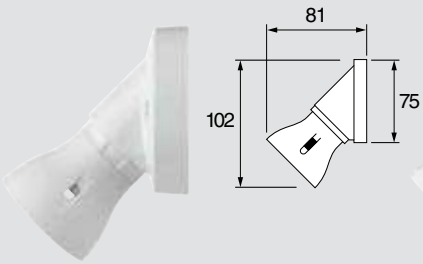

Standard Angled Batten Lampholder

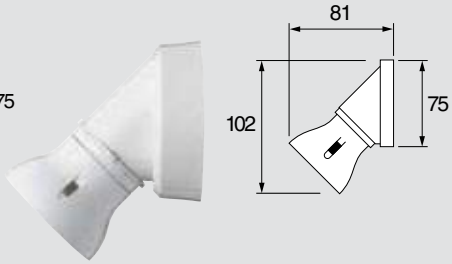

SG Type Angled Batten Lampholder

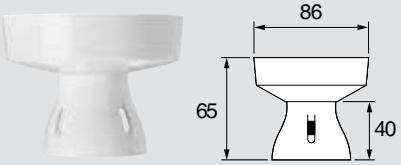

Standard Batten Lampholder

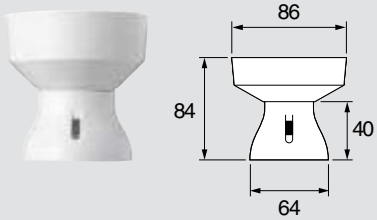

SG Type Batten Lampholder

Heat Resistance

Two levels of heat resistance are nominated for lampholders but at different maximum working temperatures and the products must be identified by a different marking code.

HEAT RESISTANCE	MAX WORKING TEMP
T2	Lamp cap temp 210°C marked BS 7895 and BS EN 61184 T2

Lamp wattage rating

All MK lampholders comply with category T2 BS EN 61184. It is important to ensure that the wattage rating of the lamp used is not higher than that for which the particular shade or luminaire is designed.

Weight of fittings

Ceiling roses and pendant sets are suitable for fittings of up to 3 kg. Heavier fittings must be installed using independent support, e.g. ceiling hook.

Angled batten lampholders

Can be mounted direct to the wall.

Straight batten lampholders

Can be screwed direct to the ceiling but it must be ensured that it is fastened to a wooden joist. Integral Ceiling Rose included.

Ceiling roses and pendant sets

Flush mounting to circular conduit boxes in accordance with BS EN 61386-1:2008.

Installation

MK ceiling accessories are safe for use in all normal lighting applications. Do not mount them where they may be subjected to excessive moisture or dampness.

Wiring

Products must be installed in accordance with BS 7671:2008.

3 and 4 Pin Accessories/Pre-Wired

Standards and approvals

BS 6972 & BS 5733

Heat resisting three core circular cable BS 6972 & BS 5733 to BS 6500:2000 (Table 29)

Low smoke zero halogen three core circular cable

TECHNICAL SPECIFICATION

ELECTRICAL

VOLTAGE RATING
250V a.c. 50Hz

CURRENT RATING
6 Amp

TERMINAL CAPACITY (ACCESSORIES)
Phase, neutral, earth & 'loop in' terminals will each accept:

K3230, K4230 – 1 x 0.75 or 1 x 1.00mm conductors

K3220, K3212, K3240, K4220, K4214 and K4240 – 5 x 0.75, 5 x 1.00, 4 x 1.50, 3 x 2.50 or 2 x 4.00mm² conductors

PHYSICAL

STATIC SUSPENSION LOAD
5kg max

AMBIENT OPERATING TEMPERATURE
–5°C to +40°C
(not to exceed an average of more than 25°C in any 24 hour period)

IP RATING
IP2XD

MAX. INSTALLATION ALTITUDE
2000 metres

Description

A connection and distribution system that brings convenience and versatility to lighting installations. The range consists of a modular plug and socket interface which provides electrical connection in one easy click-in action. Luminaries can be plugged in without isolating the circuit. All live contacts are inaccessible and the earthing connection is made before any other.

Wired products incorporate either heat resisting flex or low smoke zero halogen (LSF) insulated and sheathed flexible 0.75mm four core circular cable.

Features

- Live contacts are inaccessible
- Earth Contact – first to make, last to break
- Mechanical and Electrical Connection in one 'click-in' action
- Strong load grips support up to 5kg

MOUNTING BOXES

	Surface	Flush (dryline)	Flush (solid)
K3220/K3240	K3220/K4220/K4240WHI	N/A	N/A
K4214	K2160WHI	QFB1WHI	861ZIC

Dimensions

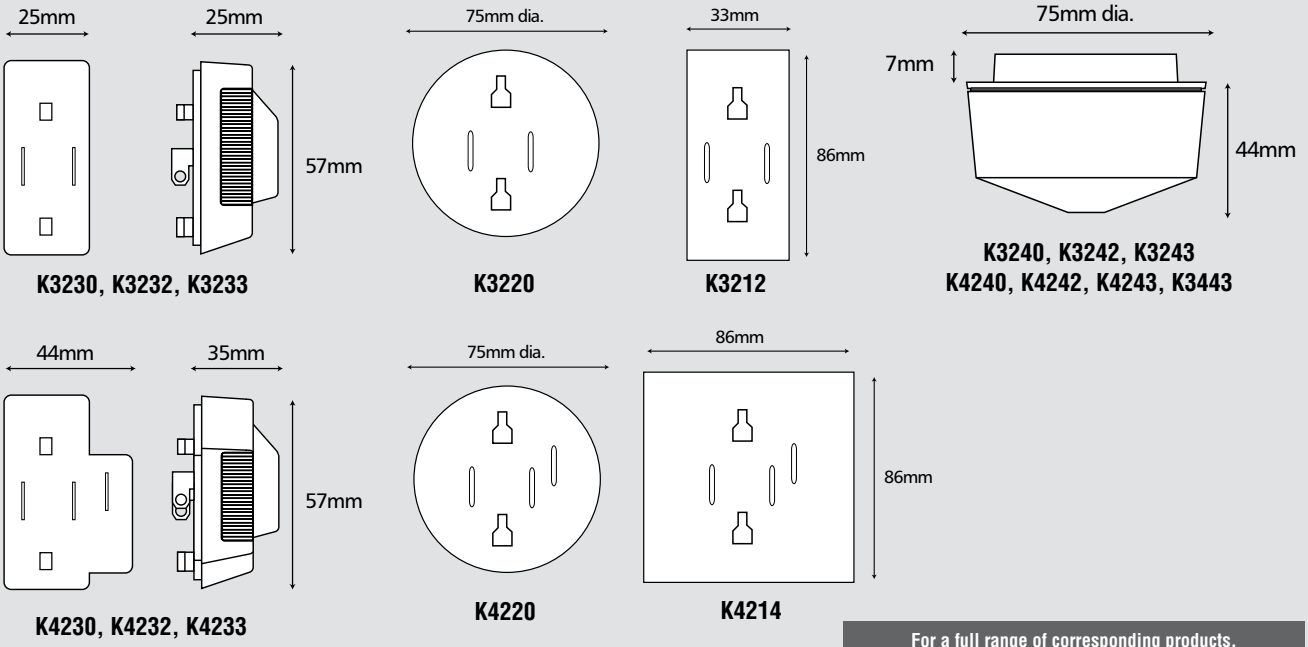

For a full range of corresponding products, see pages 58-62 in the product selector.

Link Technical

Distribution Boxes

Standards and approvals

BS 5733

TECHNICAL SPECIFICATION

ELECTRICAL

CURRENT RATING
6 amps

TERMINAL CAPACITY
3 x 6mm rated at 16 amps

PHYSICAL

CONDUIT ENTRIES WITH SNAP FIT BLANKS
20 and 25mm in top, bottom and back faces.
Outlets to be wired as 1 or 2 banks

AMBIENT OPERATING TEMPERATURE
–5°C to +40°C
(not to exceed an average of more than 25°C in any 24 hour period)

IP RATING
IP2XD

MAX. INSTALLATION ALTITUDE
2000 metres

Features

- Fixing of distribution box to lighting trunking made easy through choice of cable entry points
- Distribution box can be suspended on drop rods or fitted to the wall or ceiling

Dimensions

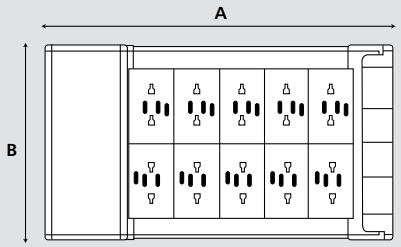

DIMENSIONS (mm)

	A	B
K4204	237	222
K4206	335	222
K4208	400	222
K4210	465	222

K4210 pictured

Description

Distribution boxes consisting of an extruded aluminium body with V0 rated plastic terminal housing. Both 3 and 4 pin plugs can be used with the distribution box 4 pin socket outlets.

Installation

Provision for screw (No. 8) fix to walls or trunking and slots for Caddy Clips* on top, bottom and back faces. Conduit entries with snap fit blanks; 20 and 25mm in top, bottom and back faces. Outlets can be wired as 1 or 2 banks.

*Caddy Clip is a registered trade mark of Erico Europa (UK) Ltd. Reading.

Wiring Diagrams

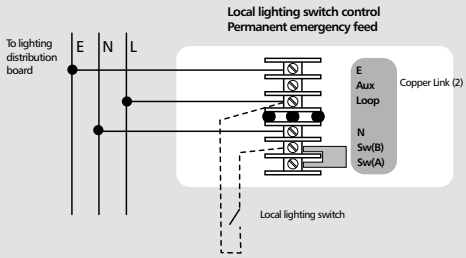

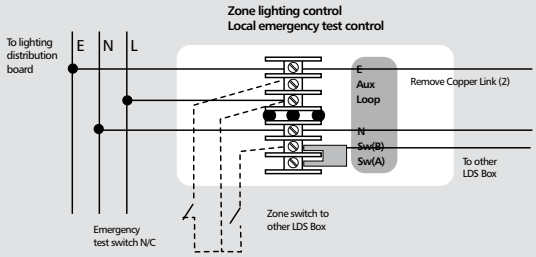

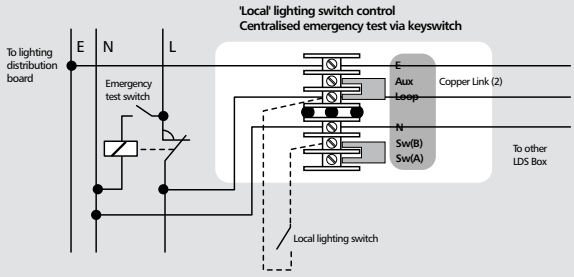

MK Elements Collection

Installation

The MK Elements Collection products consist of the main product module, complete with its' support frame, plus a separate clip on frontplate. The product is mounted to the wall, after wiring, and the frontplate is clipped onto the frame. The frontplate is supplied separately to aid installation.

1. Ensure the depth of the back box is correct for the product and that it is fitted securely to the wall.
2. Install the cables in the normal way and, using the fixing screws supplied, mount the product, still minus its frontplate, to the wall. It is important the correct headed screws are used as any other may clash with the rear of the frontplate.
3. Do not over tighten the screws, so as to prevent damage or distortion to the product or support frame. Adjust so the frame or module sits squarely on the wall.
4. Care should be taken to ensure product features such as snap fits are not blocked during installation or decorating, preventing correct fitting of frontplates (for example plaster, tile grout, paint etc).

Fitting and removing the frontplate

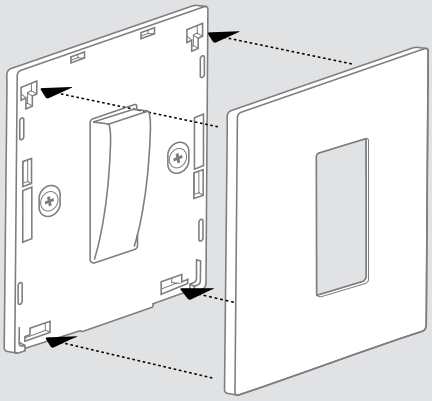

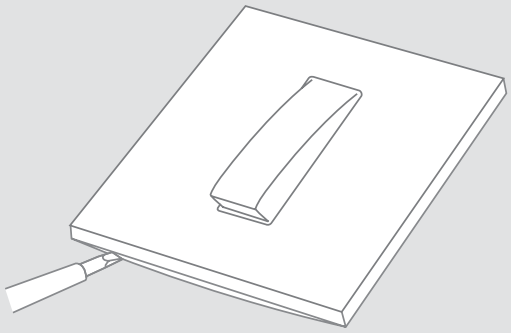

Fitting the frontplate

1. Locate the top and bottom hooks on the back of the frontplate into the holes on the top and bottom of the module.
2. Gently push along the top edge of the frontplate followed by the bottom edge.

Note: Ensure the correct frontplate is fitted to the correct module or frame

Removing the frontplate

1. Carefully insert a 4mm screwdriver into the slots provided along the bottom edge frontplate.
2. Carefully twist the screwdriver and lift the frontplate away disengaging the snap fits.

For a full range of corresponding products, see pages 70-97 in the product selector.

Note: Care should be taken to ensure product features such as snap fits are not blocked during installation or decorativng, preventing correct fitting of frontplates (for example plaster, tile grout, paint etc).

Elements Collection Technical

Electronic Switches

Standards and approvals

All Elements electronic switches comply with IEC 60669-2-1

TECHNICAL SPECIFICATION

ELECTRICAL

MAINS SUPPLY VOLTAGE
220-240V a.c. 50/60Hz

MAINS SUPPLY VOLTAGE RANGE
198 - 264V a.c.

MAINS SUPPLY FREQUENCY
50/60Hz ±3Hz

TERMINAL CAPACITY
All products
4 x 1mm²
4 x 1.5mm²
3 x 2.5mm²
2 x 4mm²
1 x 6mm²

PHYSICAL

OPERATING TEMPERATURE
-5°C to +40°C

IP RATING
IP4X

MAX. INSTALLATION ALTITUDE
2000 metres

To prevent damage to frontplates during installation it is recommended that a screwdriver with a blade width of 4mm is used.

MOUNTING BOX TYPE

The minimum depth required is 35mm.
When using 2.5mm² cables the minimum box depth required is 40mm.

Description

Elements Electronic Switches offer intuitive touch sensitive silent switching (except K34370) with LED displays, for a unique user experience.

Features

- 16 standard finishes
- Many more customised combinations of standard colours, materials and finishes available
- Bespoke colours, materials and finishes available via the Design Service
- Touch sensitive electronic switch with LED display
- Standby light to assist location in low light level applications
- Soft start and off offers superior user experience and prolongs lamp life
- Available as 1 and 2 gang
- LED compatible (requires neutral)
- High power switches up to 10A or fluorescent load (10AX)
- Intelligent overload protection (not applicable to 10A switch)
- 2-way switching available

Dimensions (mm)

1 gang

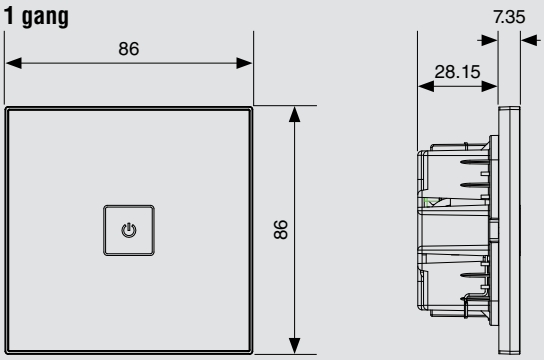

2 gang

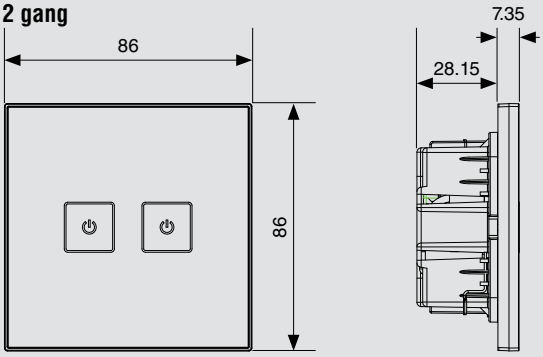

Electronic Switches

LOAD RATING AND TYPE		
Description	**K34371 & K34372 (per gang)**	**K34370**
GLS/ Tungsten Filament, Mains Tungsten Halogen	25 – 400W	25-2400W
Fluorescent tubes with ferro-magnetic ballast with power factor correction	*18-200VA	18-1800W
Fluorescent with electronic ballast	*18-400VA	18-540W
Low Energy PL-C and PL-S Fluorescent with Ferromagnetic ballast	*18-200VA	18-750W
Low Energy PL-C and PL-S Fluorescent with electronic ballast	*18-400VA	*18-750W
Compact Fluorescent (CFL)	*5-200W	*5-750W
ELV Tungsten Halogen with Ferro-magnetic transformer or Dimmable Electronic Transformer	50-400VA (Refer to note 4)	50-1500VA (Refer to note 4)
ELV Tungsten Halogen with Non-dimmable Electronic Transformer	*25-400VA	25 – 1500VA
Mains LED lamp for incandescent replacement	*4-150W (Max. 15 lamps)	*4-500W (Max. 15 lamps)
Ceiling Fan (Note: Not suitable for fan with remote controller function)	Not applicable	*1-2 Max. 250W
Ventilation Fan	*1-2 Max. 250W	
Dimmable or non-dimmable LED Driver	*4-150W (Max 10 LED drivers only)	*4-500W (Max 10 LED drivers only)

Note:

1. Do not use loads of different types on the same circuit.
2. Not suitable for use with any other load type.
3. *Neutral connection is required. It is recommended to connect neutral whenever possible when dimming LED lamps, to extend the load handling capability of the switch.
4. If neutral is connected to the switch then the minimum rating of the load can be reduced to 25VA.

Elements Collection Technical

Electronic Dimmers

Standards and approvals

All Elements electronic dimmers comply with IEC 60669-2-1

TECHNICAL SPECIFICATION

ELECTRICAL

MAINS SUPPLY VOLTAGE
220-240V a.c. 50/60Hz

TERMINAL CAPACITY
All products
4 x 1mm²
4 x 1.5mm²
3 x 2.5mm²
2 x 4mm²
1 x 6mm²

For 1-10V control cable of K34499
2 x 0.75mm²
2 x 1mm²
2 x 1.5mm²
2 x Cat 5e Cable

PHYSICAL

OPERATING TEMPERATURE
-5°C to +40°C

IP RATING
IP4X

MAX. INSTALLATION ALTITUDE
2000 metres

To prevent damage to frontplates during installation it is recommended that a screwdriver with a blade width of 4mm is used.

MOUNTING BOX TYPE

The minimum depth required is 35mm.
When using 2.5mm² cables the minimum box depth required is 40mm.

Description

Elements Electronic Dimmers offer intuitive touch sensitive silent dimming with LED displays, for a unique user experience.

Features

- 16 standard finishes
- Many more customised combinations of standard colours, materials and finishes available
- Bespoke colours, materials and finishes available via the Design Service
- Touch sensitive electronic dimmer with LED display
- LED Vapour trail follows users finger to indicate the power level
- Standby light to assist location in low light level applications
- Soft start and off offers superior user experience and prolongs lamp life
- When switched on lights return to last setting
- Available as 1 and 2 gang
- LED compatible
- Intelligent overload protection (not applicable to 1-10V dimmer)
- Leading edge and trailing edge dimmers available
- 2-way dimming available

Dimensions (mm)

1 gang

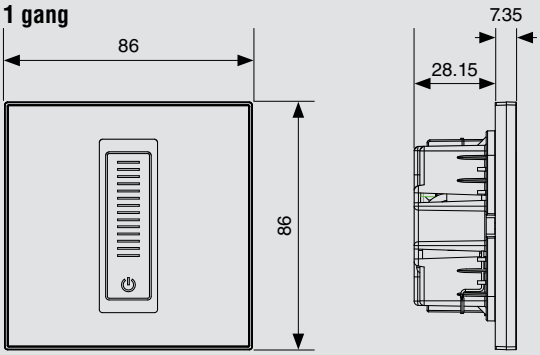

2 gang

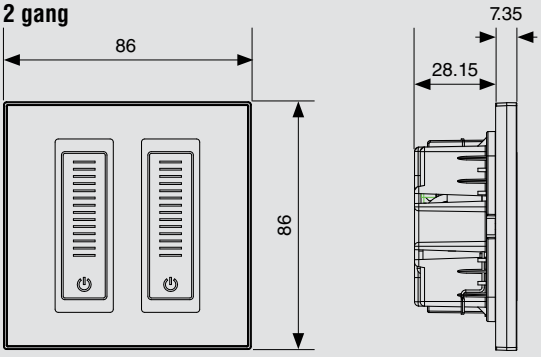

Electronic Dimmers

LOAD RATING AND TYPE		
Leading Edge Dimmers	**K34100**	**K34101 & K34102 (per gang)**
GLS/ Tungsten Filament, Mains Tungsten Halogen	40 - 500W	40 – 300W
Mains dimmable LED lamp for incandescent replacement	6 - 150W Max.12 lamps	6 - 120W Max. 12 lamps
ELV Tungsten Halogen with dimmable Ferro-magnetic transformer	35 - 400VA	35 - 240VA
Trailing Edge Dimmers	**K34103**	**K34104 & K34105 (per gang)**
GLS/ Tungsten filament, Mains Tungsten Halogen	25 – 500W	25 – 300W
ELV Tungsten Halogen with Dimmable Electronic Transformer	35 – 500VA	35 – 300VA
Dimmable LED Driver	*4-150W (Max 5 LED drivers only)	*4-120W (Max 5 LED drivers only)

Note:

1. Do not use loads of different types on the same circuit.
2. Not suitable for use with any other load type.
3. *Neutral connection is required. It is recommended to connect neutral whenever possible to extend the load handling capability of the dimmer.

1-10V Dimmer	K34499
Rated Load	6AX
Maximum number of ballasts	10

Neutral connection is mandatory on 1-10V Dimmer. Suitable for use with dimmable fluorescent or LED lighting which is driven by separate 0/1-10V control gear.

Suitable for use with 0/1-10V analogue dimmable ballast operating in accordance with IEC60929 annex E.

Elements Collection Technical

Socket Outlets

Standards and approvals

13A socket outlets comply with BS 1363 Part 2.

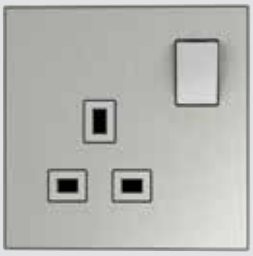

Description

A range of socket outlets designed for ease of installation and having all the advantageous design features of the Elements Collection.

Sockets are available with two earth terminals on a common busbar to provide a double earth facility for use when installations require a high integrity protective connection as specified within BS 7671:2008.

The products can be quickly installed as replacements for existing 13 Amp sockets or in new installations (if suitable mounting box is in position).

Round pin sockets
A range of round pin sockets is also available.

Features

- 16 standard finishes
- Many more customised combinations of standard colours, materials and finishes available
- Bespoke colours, materials and finishes available via the Design Service
- Products with LED locators and indicators available
- 3 pin operated shutter
- Printed terminal markings on grey rear mouldings for clearer identification
- Top access, angled terminals make wiring easier and quicker
- 3mm minimum switch contact gap
- Double pole switching
- Additional electrical safety from neutral ‘make first’, ‘break last’ feature
- Switch contacts with silver contacts on both surfaces for good continuity
- Only one size of screwdriver required for installation
- Dual earth terminals for high integrity earthing are available
- Backed out and captive terminal screws

13 Amp Socket Outlets

Standards and approvals

Elements 13A socket outlets comply with BS 1363 Part 2.

TECHNICAL SPECIFICATION
ELECTRICAL
VOLTAGE RATING 250V a.c.
CURRENT RATING 13A
TERMINAL CAPACITY Live, neutral & earth 3 x 2.5mm² 3 x 4mm² 2 x 6mm² (stranded)
PHYSICAL
AMBIENT OPERATING TEMPERATURE –5°C to +40°C
IP RATING IP2XD
MAX. INSTALLATION ALTITUDE 2000 metres

Installation

Elements socket outlets can be wall or bench mounted. Do not mount or use as a trailing socket or where they may be subject to excessive moisture or dampness.

BOX TYPES

	Flush	Flush (for extra wiring space)
1 GANG	866ZIC	877ZIC
2 GANG	886ZIC	878ZIC

Dimensions (mm)

1 gang

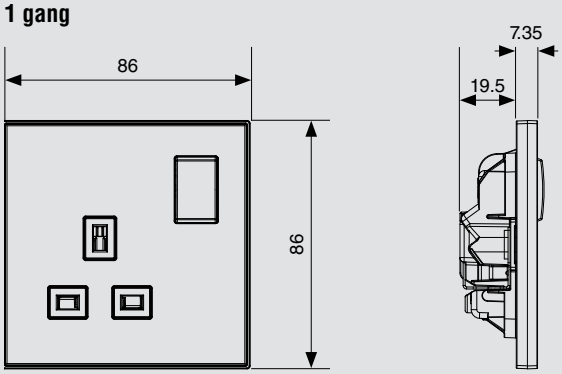

2 gang

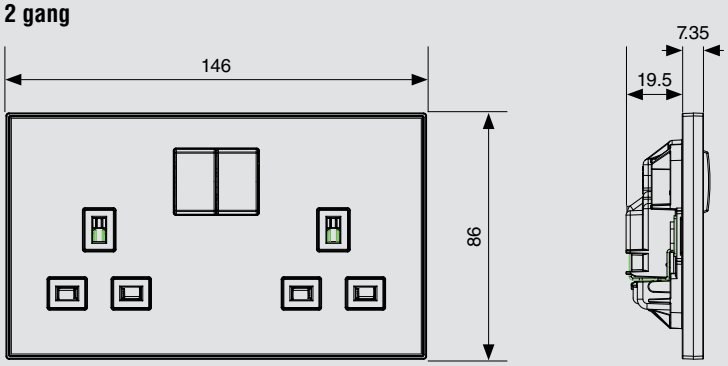

Elements Collection Technical

5 Amp Socket Outlets

Standards and approvals

Round pin socket outlets comply with BS 546

TECHNICAL SPECIFICATION

ELECTRICAL

VOLTAGE RATING
250V a.c.

TERMINAL CAPACITY
3 x 2.5mm²
3 x 4mm²
2 x 6mm² (stranded)

PHYSICAL

AMBIENT OPERATING TEMPERATURE
–5°C to +40°C

IP RATING
IP2XD

MAX. INSTALLATION ALTITUDE
2000 metres

Installation

Elements socket outlets can be wall or bench mounted – do not mount or use as a trailing socket or where they may be subjected to excessive moisture or dampness.

BOX TYPES

Flush	Flush (for extra wiring space)
866ZIC (35mm deep)	877ZIC (46mm deep)

Description

A range of round pin socket outlets designed for ease of installation and having all the advantages and design features of the Elements Collection. These products can be quickly installed as replacements for existing socket outlets or in new installations.

Features

- 16 standard finishes
- Many more customised combinations of standard colours, materials and finishes available
- Bespoke colours, materials and finishes available via the Design Service
- 3mm minimum switch contact gap
- Only one size of screwdriver required for installation
- Round Pin Socket Outlets available in 16 standard finishes

Dimensions (mm)

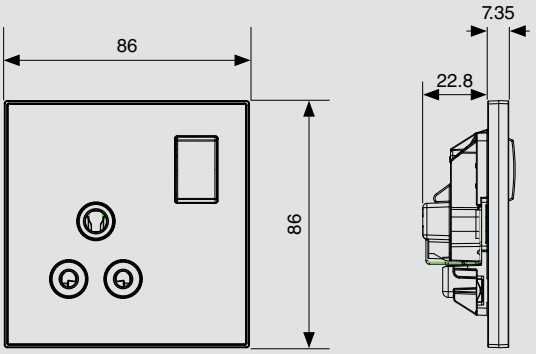

Shaver/Toothbrush Supply Unit

Standards and approvals

Shaver/Toothbrush supply units comply with BS EN 61558-2-5: 1998.

Accommodates plugs as follows:

- British 5mm dia pins on 16.6mm pitch (230V socket) to BS 4573:1970
- European 4mm dia pins on 17 to 19mm pitch (230V socket) to BS EN 50075
- Australian 6.5 x 1.6 flat blades each set at 30° to the vertical on a nominal pitch of 13.7mm (230V socket) AS/NZS 3112:2000
- American 6.6 x 1.6 flat horizontal blades on 12.7mm pitch (115V socket) to UL498/NEMA WD6

TECHNICAL SPECIFICATION

ELECTRICAL

VOLTAGE RATING
230V a.c. Input 50/60Hz
230V or 115V nominal outputs

CURRENT RATING
200mA max. (internal thermister trip current)

MAXIMUM LOAD
20VA
No load voltage < 275V

TERMINAL CAPACITIES
Each terminal will accommodate 1 x 4mm² or 2 x 2.5mm² solid conductors*

PHYSICAL

AMBIENT OPERATING TEMPERATURE
–5°C to +40°C

IP RATING
IP41 (In Zone 2 if fixed where direct spray from showers is unlikely)

MAX. INSTALLATION ALTITUDE
2000 metres

*The design of this unit means that on no load the transformer output is allowed to be as high as 275V. This means that rechargeable shavers and toothbrushes intended for use on the continent may be damaged by the inrush current created by this higher voltage. Rechargeable shavers and toothbrushes with a wide range of input voltage should be recharged at 115V. Shavers and toothbrushes manufactured for the UK are designed to be used with a transformer unit. Loads in excess of 20VA may cause the solid state overload to operate before shaving is completed. This is to protect the transformer.

Description

Designed for ease of installation and having many of the advantageous design features of the Elements Collection.

May be used in bathrooms and washrooms but must only be installed in accordance with the latest edition of BS 7671.

Features

- 16 standard finishes
- Many more customised combinations of standard colours, materials and finishes available
- Bespoke colours, materials and finishes available via the Design Service
- Top access terminal screws make wiring quicker and easier
- Automatic primary supply switching on insertion of plug
- Choice of 230V or 115V output socket positions
- Safety interlocked shutters to prevent insertion of two plugs simultaneously
- Only one size of screwdriver required for installation
- Frontplate fixing screws retained on rear case moulding
- Integral over current device to protect transformer
- Suitable for use with electric toothbrush chargers.

Installation

Shaver/Toothbrush supply unit should be wall mounted.

BOX TYPES
Flush mounting only
Metal box 878ZIC (minimum metal mounting box depth is 47mm)

Dimensions (mm)

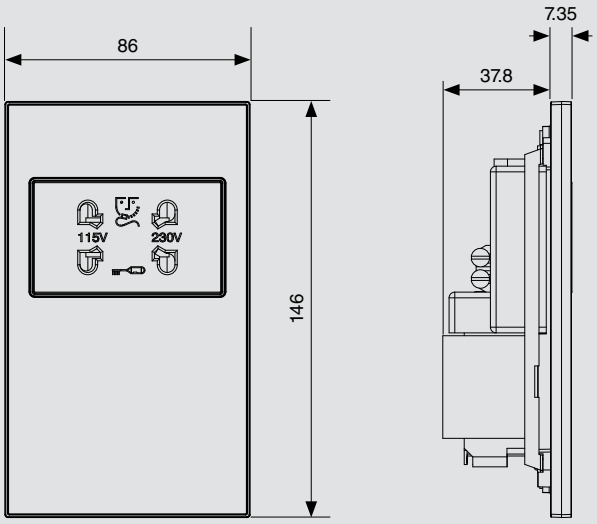

Elements Collection Technical

Connection Units

Standards and approvals

All Elements Connection Units comply with BS 1363 Part 4

Description

A range of 13A fused connection units designed for the connection of refrigerators, central heating boilers and other fixed appliances.

The range is designed for ease of installation and has all the advantageous design features of the Elements Collection.

Fuse carriers

These are captive and are opened by a fast acting, worm-drive operated screwdriver for ease of replacement.

Flex outlets

The products are equipped with very strong, push-fit cord grips making installation safe, quick and easy.

Features

- 16 standard finishes
- Many more customised combinations of standard colours, materials and finishes available
- Bespoke colours, materials and finishes available via the Design Service
- Only one size of screwdriver required for installation
- Worm-drive operated fuse carriers for additional security
- Push-fit cord grips, for safer, quicker installation
- Additional electrical safety from neutral ‘make first’, ‘break last’ feature

Elements Collection Technical

Connection Units

Standards and approvals

All Elements Connection Units comply with BS 1363 Part 4

TECHNICAL SPECIFICATION

ELECTRICAL

VOLTAGE RATING
250V a.c.

CURRENT RATING
13 Amp

TERMINAL CAPACITY
3 x 2.5mm²
2 x 4mm²
1 x 6mm² (stranded)

Flex outlet/cord grip capacities
Min. 2 Core, 0.5mm²
Max. 3 Core, 1.5mm²

PHYSICAL

AMBIENT OPERATING TEMPERATURE
–5°C to +40°C

IP RATING
With flex outlet
IP2XD

Without flex outlet
IP4X

MAX. INSTALLATION ALTITUDE
2000 metres

Dimensions (mm)

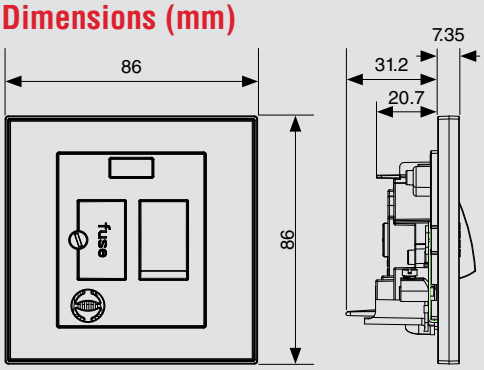

Installation

Elements connection units can be wall or bench mounted.

Do not use on a trailing lead.

BOX TYPES	
Flush	Flush (for extra wiring space)
866ZIC (35mm deep)	877ZIC (46mm deep)

Changing Fuses

1. Unscrew the fuse carrier screw to partially eject the carrier.
2. Carefully lever (by screwdriver or finger) the carrier out further to remove the fuse. Note: The carrier does not come fully out.
3. Always replace with a BS 1362 type fuse (as used in 13A plugs) of the correct rating.

Elements Collection Technical

Grid Switch Modules

Standards and approvals

All Elements switches comply with BS EN 60669-1:1999.

TECHNICAL SPECIFICATION

ELECTRICAL

VOLTAGE RATING
250V a.c. 50Hz

CURRENT RATING
1way/2way – 10AX or 20AX versions available.
All Push switches – 10A only
Intermediate – 20AX only
Double Pole – 20AX only
Centre Off – 10A only

TERMINAL CAPACITY
All products
4 x 1mm²
4 x 1.5mm²
3 x 2.5mm²
2 x 4mm²
1 x 6mm²

CONTACT GAP
3mm switch contact gap
(Except K34900 and K34901)

PHYSICAL

OPERATING TEMPERATURE
–5°C to +40°C

IP RATING
IP4X

MAX. INSTALLATION ALTITUDE
2000 metres

BOX TYPES

	Flush
1 and 2 gang switches	861ZIC (25mm deep)
3 and 4 gang switches	862ZIC (25mm deep)

Description

Elements Modular Switches require a separate frontplate, when ordering ensure the appropriate module and frontplate is selected.

Features

- 16 standard finishes
- Many more customised combinations of standard colours, materials and finishes available
- Bespoke colours, materials and finishes available via the Design Service
- Switch contacts with silver contacts on both surfaces for good continuity
- Positive switch action
- Only one size of screwdriver required for installation
- Backed out and captive terminal screws
- Locator versions available for low light level applications

Dimensions (mm)

1 gang

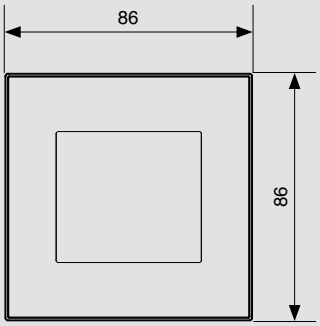

2 gang

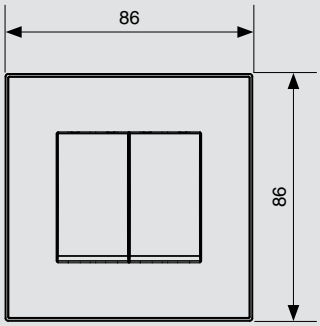

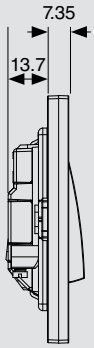

1 gang wide rocker

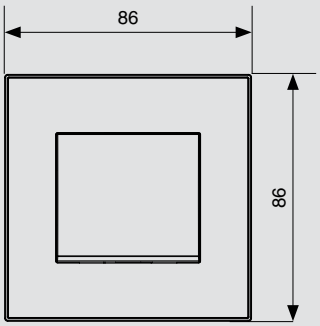

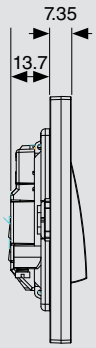

Sectional drawings show the furthest projections from the back of the frontplate (wall surface).

Grid Switch Modules

Wiring Diagrams

One-way switching

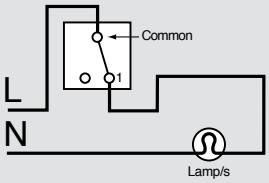

Two-way switching – 2 wire control

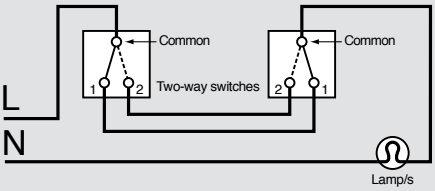

Dotted lines show alternative switch positions

Two-way switching plus intermediate switching – 2 wire control

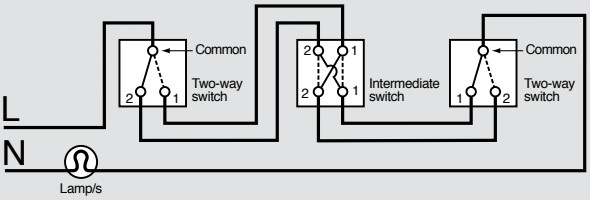

Dotted lines show alternative switch positions

Two-way switching – 3 wire control

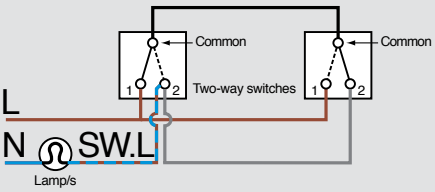

Dotted lines show alternative switch positions

Two-way switching plus intermediate switching – 3 wire control

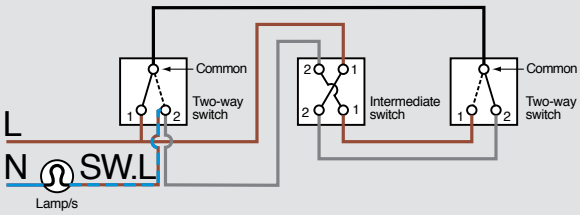

Dotted lines show alternative switch positions

Note: Terminal positions may alter. The above diagrams are to show wiring layout.

Note:

Switches featuring locators and indicators use LED illumination.

All switches fitted with a locator are intended to give a very low light output whilst the switch is turned off. The low level of power flowing in this circuit is compatible with the majority of installation requirements however, certain lamp types or installations using multiple intermediate switches on one circuit may require the use of a snubber capacitor. The recommended capacitor to use would be X2 rated 275V 0.1 μ F.

Switches incorporating indicator or locator illumination must be disconnected before carrying out any site installation testing.

Elements Collection Technical

Grid Frontplates

Frontplate Dimensions (mm)

1 module – K35131

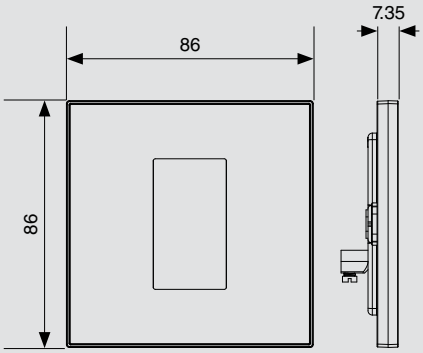

2 module – K35132

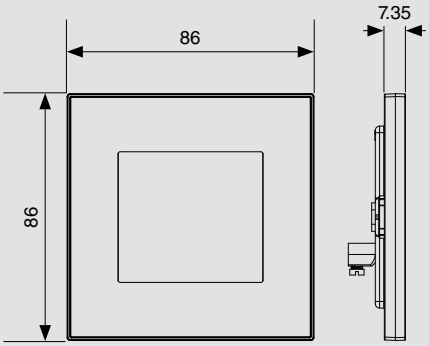

3 module – K35133

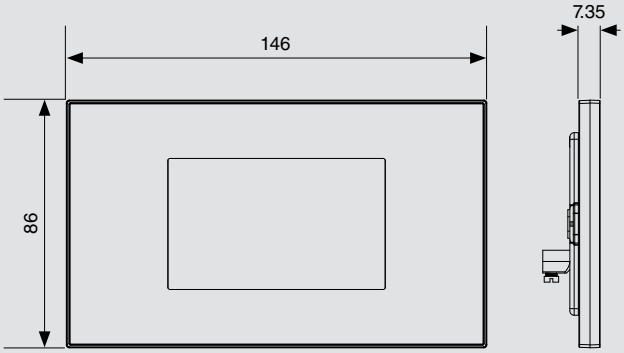

4 module – K35134

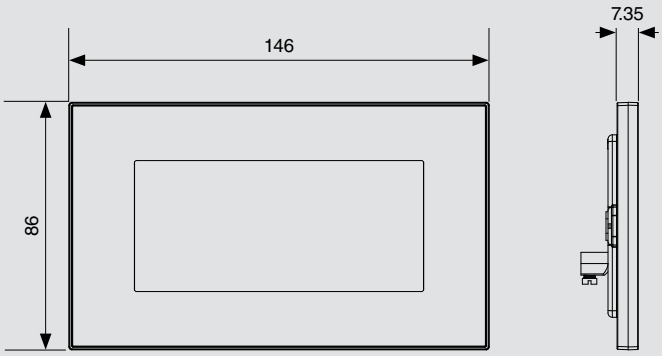

High Current Switches

Standards and approvals

High Current switches comply with BS EN 60669-1

TECHNICAL SPECIFICATION

ELECTRICAL

VOLTAGE RATING
250V a.c.

CURRENT
32A Switch
50A Switch

SWITCH
3mm contact gap
Double pole operation

TERMINAL CAPACITY, 50A SWITCHES
4 x 4mm²
3 x 6mm²
1 x 10mm²
1 x 16mm²

TERMINAL CAPACITY, 32A SWITCHES
3 x 2.5mm²
2 x 4mm²
1 x 10mm²
1 x 6mm²

PHYSICAL

AMBIENT OPERATING TEMPERATURE
–5°C to +40°C

MAX. INSTALLATION ALTITUDE
2000 metres

Note: These switches are **not** recommended for switching large banks of PCs.

Description

A range of switches harmonising with the Elements style, suitable for the switching of all domestic, commercial and industrial appliances where higher current ratings are required, i.e. cookers, heaters, commercial refrigeration units etc.

Features

- 16 standard finishes
- Many more customised combinations of standard colours, materials and finishes available
- Bespoke colours, materials and finishes available via the Design Service
- Positive double pole switching
- Toggle action switches
- Replaceable neon indicators

BOX TYPES

Switches	Max. Cable Size	Flush
32A	10mm²	46mm
50A	16mm²	46mm

BOX REFERENCES

Flush Box depth	32A	50A
46mm	877ZIC	877ZIC

Dimensions (mm)

32A

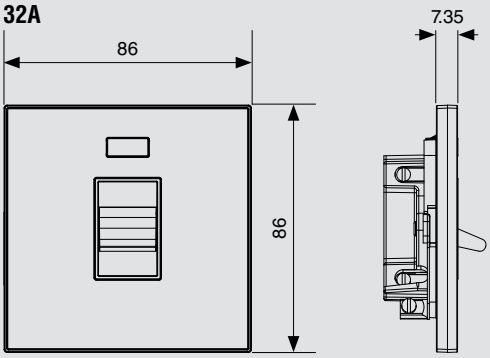

50A

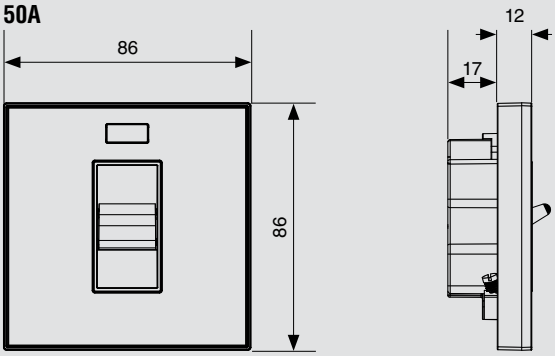

Elements Collection Technical

Do Not Disturb / Make Up Room Switches

Standards and approvals

All Elements switches comply with BS EN 60669-1:1999.

TECHNICAL SPECIFICATION

ELECTRICAL

VOLTAGE RATING
250V a.c. 50Hz

CURRENT RATING
10A

TERMINAL CAPACITY
All products
4 x 1mm²
4 x 1.5mm²
3 x 2.5mm²
2 x 4mm²
1 x 6mm²

CONTACT GAP
K33900DND – Mini gap
K33885DND – Normal gap

PHYSICAL

OPERATING TEMPERATURE
–5°C to +40°C

IP RATING
IP4X

MAX. INSTALLATION ALTITUDE
2000 metres

BOX TYPES

	Flush
All switches	861ZIC (25mm deep)

Description

The Elements Do Not Disturb / Make Up Room Switches have been developed along with a number of other products for hotels and hospitality venues, offering guests comfort and control.

Features

- 16 standard finishes
- Many more customised combinations of standard colours, materials and finishes available
- Bespoke colours, materials and finishes available via the Design Service
- Switch contacts with silver contacts on both surfaces for good continuity
- Positive switch action
- Only one size of screwdriver required for installation
- Backed out and captive terminal screws

Dimensions (mm)

Room Switch

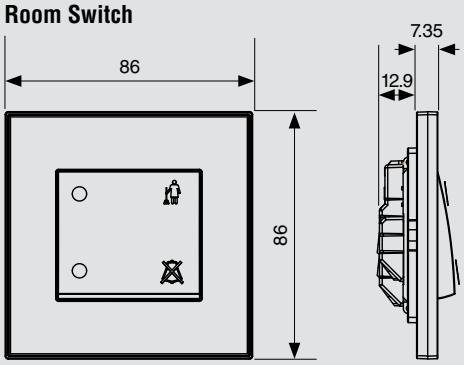

Corridor Switch

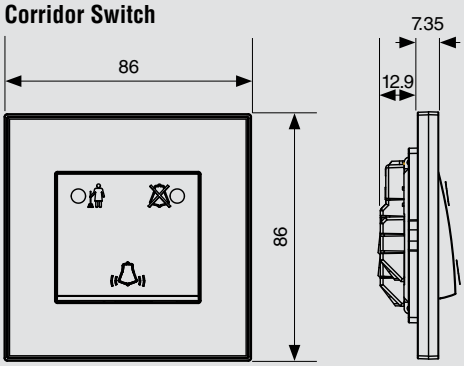

Connection of LED Indicators

Room Switch – Inside
"Occupancy Selector"

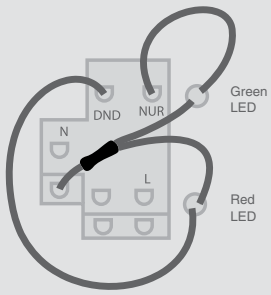

Corridor Switch – Outside
"Bell Push/Indicator"

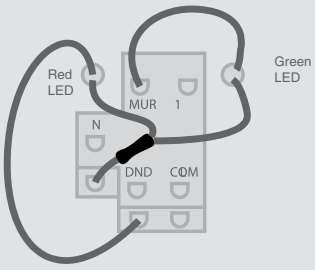

Keycard Switch with Time Delay

Standards and approvals

BS EN 60669-2-1

TECHNICAL SPECIFICATION

ELECTRICAL

VOLTAGE RATING
220-240V, 50/60Hz

CURRENT RATING
10A

TERMINAL CAPACITY
4 x 1.5mm²
2 x 2.5mm²
1 x 4.0mm²
1 x 6.0mm²

EARTH TERMINAL
3 x 2.5mm²
2 x 4.0mm²
1 x 6.0mm²

CONTACT GAP
Micro Gap

PHYSICAL

AMBIENT OPERATING TEMPERATURE
0°C to +35°C

IP RATING
IP2X

MAX. INSTALLATION ALTITUDE
2000m

TIME DELAY (NON ADJUSTABLE)
30 seconds

Description

The Elements Keycard Switch with Time Delay has been developed along with a number of other products for hotels and hospitality venues, offering guests comfort and control, whilst delivering energy efficiency by avoiding energy waste in unoccupied rooms.

The Keycard Switch has a fixed time delay; once the card is removed guests are not left in the dark.

Features

- 16 standard finishes
- Many more customised combinations of standard colours, materials and finishes available
- 30 Second fixed time delay
- Bespoke colours, materials and finishes available via the Design Service

BOX TYPES

	Flush	Flush (for extra wiring space)
1 Gang	866ZIC (35mm deep)	877ZIC (46mm deep)

Dimensions (mm)

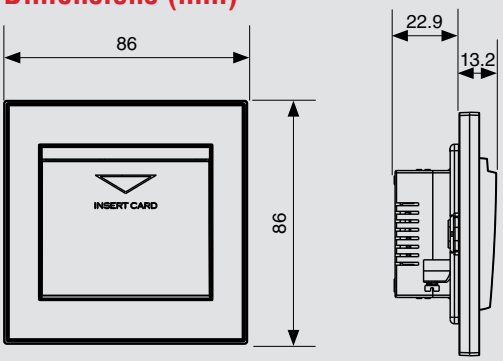

Wiring Diagram

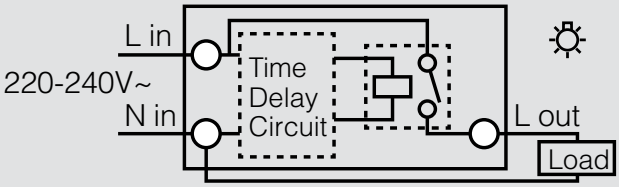

Elements Collection Technical

Euro Frontplates

Standards and approvals

Euro frontplates comply with BS 5733:2010

TECHNICAL SPECIFICATION

DIMENSIONS

HEIGHT
86mm

WIDTH
1G 86mm
2G 146mm

APERTURE DIMENSIONS

HEIGHT
50mm

WIDTH
1G 1 module 25mm
1G 2 module 50mm
2G 4 module 100mm

Description

Frontplates for mounting Euro Modules.

Features

- 16 standard finishes
- Many more customised combinations of standard colours, materials and finishes available
- Bespoke colours, materials and finishes available via the Design Service
- 1G and 2G frontplates
- Accepts industry standard Euro snapfit modules
- 1G Euro frontplate accepts 1 or 2 Euro modules
- 2G Euro frontplate accepts 4 Euro modules (100 x 50mm aperture)
- Euro 1/2 module (12.5 x 50mm) blank available
- Interchangeable modules clip into frontplate

Dimensions (mm)

1 gang, 1 module – K35111

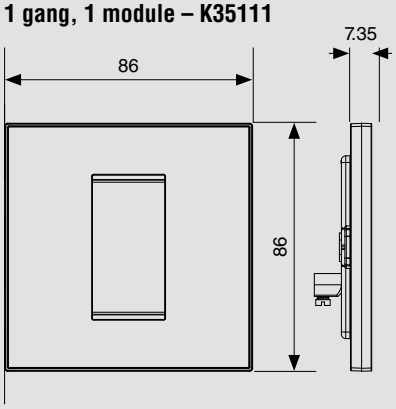

1 gang, 2 module – K35112

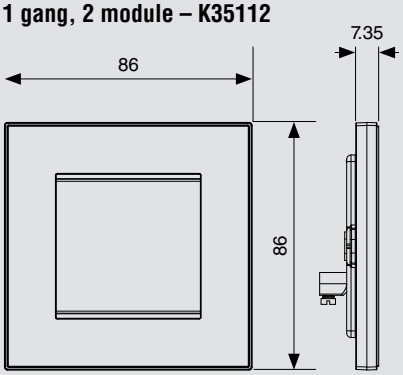

2 gang, 4 module – K35114

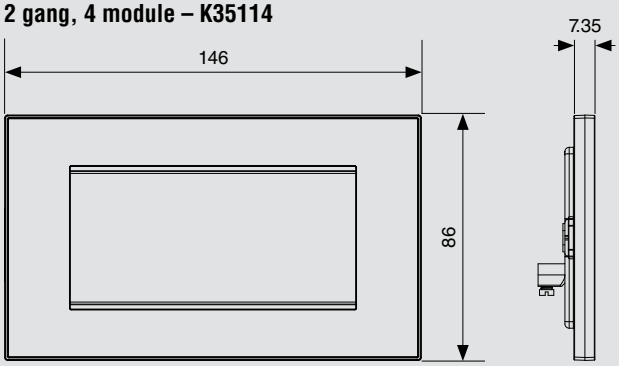

Power Modules

Standards and approvals

K5830: BS 1363 Part 2:1995

K5831: IEC 60884-1:2006

K5832: SASO 2204: 2003

K5833: BS 546: 1950

K5834: French National Standard NF C 61-314

Description

A range of euro modules designed to provide a variety of power options.

TECHNICAL SPECIFICATION

13A UK	5A UK	16A German	15A American	USB Charging Module
ELECTRICAL **VOLTAGE RATING** 250V a.c. **CURRENT RATING** 13A **TERMINAL CAPACITY** Live, neutral & earth 3 x 2.5mm² 3 x 4mm² 2 x 6mm² (stranded) **PHYSICAL** **AMBIENT OPERATING TEMPERATURE** -5°C to +40°C **IP RATING** IP2XD **MAX. INSTALLATION ALTITUDE** 2000 metres	**ELECTRICAL** **VOLTAGE RATING** 250V a.c. **CURRENT RATING** 5A **TERMINAL CAPACITY** Live, neutral & earth 3 x 2.5mm² 2 x 4mm² 2 x 6mm² (stranded) **PHYSICAL** **AMBIENT OPERATING TEMPERATURE** -5°C to +40°C **IP RATING** IP2XD **MAX. INSTALLATION ALTITUDE** 2000 metres	**ELECTRICAL** **VOLTAGE RATING** 250V a.c. **CURRENT RATING** 16A **TERMINAL CAPACITY** Live, neutral & earth 4 x 1.5mm² 2 x 2.5mm² 1 x 4mm² **PHYSICAL** **AMBIENT OPERATING TEMPERATURE** -5°C to +40°C **IP RATING** IP2XD **MAX. INSTALLATION ALTITUDE** 2000 metres	**ELECTRICAL** **VOLTAGE RATING** 127V a.c. **CURRENT RATING** 15A **TERMINAL CAPACITY** Live, neutral & earth 3 x 2.5mm² 2 x 4mm² 1 x 6mm² (stranded) **PHYSICAL** **AMBIENT OPERATING TEMPERATURE** -5°C to +40°C **IP RATING** IP2XD **MAX. INSTALLATION ALTITUDE** 2000 metres	**ELECTRICAL** **INPUT** **VOLTAGE RATING** 220-240V a.c. **FREQUENCY** 50/60Hz **RATED CURRENT** 0.12A **TERMINAL CAPACITY** Live & neutral 3 x 2.5mm² 2 x 4mm² **OUTPUT** **VOLTAGE RATING** 2 x 5V d.c. Max current **CHARGING SOCKETS** USB 2.0 type A 2A can be delivered in total to either socket outlet, or be divided between the two. This module is not limited to 1A from each socket outlet. **PHYSICAL** **AMBIENT OPERATING TEMPERATURE** 0°C to +40°C **IP RATING** IP2XD **MAX. INSTALLATION ALTITUDE** 2000 metres

Dimensions (mm)

13A UK

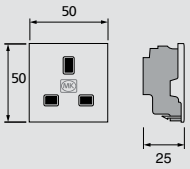

K5830

BOX TYPES
Minimum
35mm deep
Extra wiring space
46mm deep

5A UK

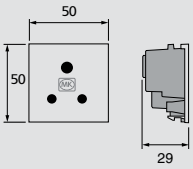

K5833

BOX TYPES
Minimum
35mm deep
Extra wiring space
46mm deep

16A German

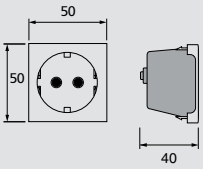

K5831

BOX TYPES
Minimum
46mm deep

15A American

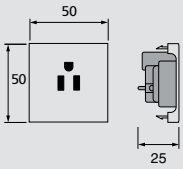

K5832

BOX TYPES
Minimum
35mm deep
Extra wiring space
46mm deep

2A USB Charging Module

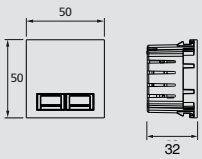

K5837

BOX TYPES
Minimum
35mm deep
Extra wiring space
46mm deep

Elements Collection Technical

RJ45 Data Outlets

Standards and approvals

ISO/IEC 11801
EN 50173
TIA 568
EN 41003

Installation

- Maximum cable length 90m.
- Cable bend radii, 40mm during installation, 20mm after installation.
- Maximum pull force 8.7kg.
- Do not over tighten cable ties.
- Do not unwind the twists in the wire pairs by more than 13mm max.

Installation details and wiring diagram illustrations

TIA WIRING SCHEME COLOUR CODES		
Pin No.	568A	568B
1	WHITE / green	WHITE / orange
2	GREEN / white	ORANGE / white
3	WHITE / orange	WHITE/ green
4	BLUE / white	BLUE / white
5	WHITE / blue	WHITE / blue
6	ORANGE / white	GREEN / white
7	WHITE / brown	WHITE / brown
8	BROWN / white	BROWN / white

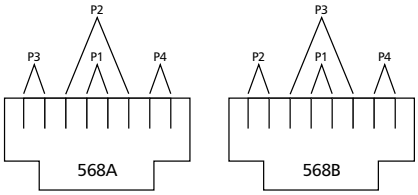

Pair 1 – BLUE/white & WHITE/blue
Pair 2 – ORANGE/white & WHITE/orange
Pair 3 – GREEN/white & WHITE/green
Pair 4 – BROWN/white & WHITE/brown

Description

Suitable for use in all Euro modular frontplates, available in the Elements range, Cat 5e and Cat 6 modules suitable for use in structured cabling distribution systems.

Euro modules are to be wired as follows

RJ45 Cat.5e
K5845 – Euro

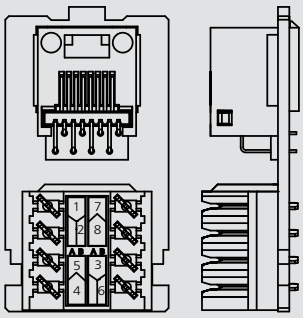

RJ45 Cat.5e Screened
K5845S – Euro

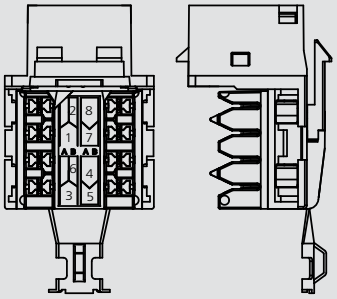

RJ45 Cat.5
K5844 – Euro Angled

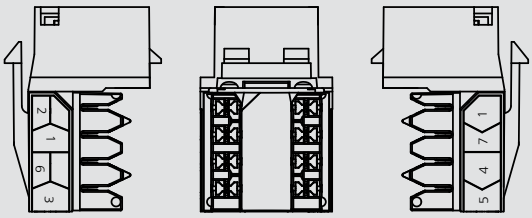

RJ45 Cat.6 Screened
K5846S – Euro

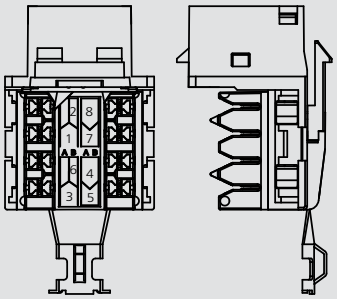

RJ45 Cat.6 Euro
K5846 – Euro, K5864 – Euro Angled

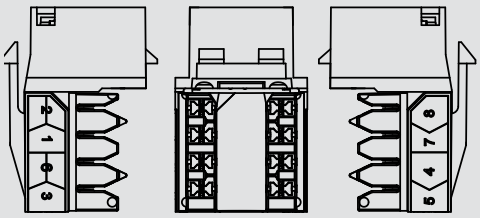

Telephone, RJ11/12, BNC Data and Blank Modules

Standards and approvals

Telephone sockets K5820 and K5821 comply with BS 6312:2.2

Data sockets K5801 comply with BS 5733:2010 (where applicable).

K5887 complies with FCC68 and EN 41003.

TECHNICAL SPECIFICATION

ELECTRICAL

CABLE TYPES
Telephone – CW1311, CW1293, CW1308, CW1316

NO. OF CABLES PER TERMINATION
Telephone – 2
RJ11/12 – 1

BNC
50 Ohms impedance cable
RG58, RG141, URM43 Belden 9907

FREQUENCY RANGE
BNC Connector – 0 to 4GHz

IMPEDANCE
BNC Connector – 50. nominal

TERMINATION TYPE
Telephone module – IDC
BNC module – Crimped connection

PHYSICAL

AMBIENT OPERATING TEMPERATURE
-5°C to +40°C

IP RATING
IP2XD – K5820, K5821, K5801 and K5787.
IP4X – K180, K188, K186 and K170

MAX. INSTALLATION ALTITUDE
2000 metres

Description

A range of telephone, data and blank modules to fit Euro front plates. BNC Euro modules with a 50Ohm crimp connector suitable for use with RG58, URM43, URM76 and Beldon 9907 type co-axial cables are also available.

Installation (Telephone socket modules)

Product performance, systems compatibility

Master Sockets: For use as the first socket outlet on a direct exchange. They contain the required surge protector (for line protection against electrical surges) and ringing capacitor.

Secondary Sockets: for use as extension sockets when connected on the same line as a Master Socket.

Installation tools required IDC Connectors (telephone & RJ45 outlets)

MK insertion tool List No. 400NAT.
Wire pull-out force: 10.5 Newtons when installed correctly.

Wiring regulation restrictions

Domestic Installations: The total REN (Ring Equivalent Number) value of all telephone equipment connected on a line must not exceed 4.

Features

- Meet all relevant BS and cabling standards
- Interchangeable modules clip into frontplates
- Front fixing facilitates easy exchange of modules
- Part of a complete range of products for telephone and data processing requirements

Telephone sockets

- Quick, simple and reliable IDC connectors
- Can be specified for all applications

Data sockets

- Latest specification for high performance systems
- Made to stringent quality assurance procedures
- Wide range of data connectors available

Elements Collection Technical

Telephone and RJ11/12

Telephone Wiring Scheme

PIN NO.	STRIPPED COLOUR WIRE
1	Green / white
2	BLUE / white
3	ORANGE / white
4	WHITE / orange
5	WHITE / blue
6	WHITE / green

Note: Main wire colour is shown in capitals

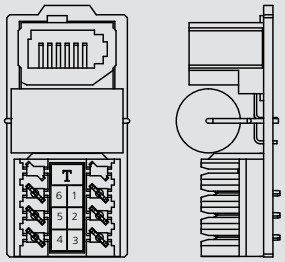

K5820 (MASTER)

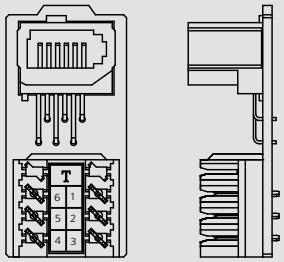

K5821 (SECONDARY)

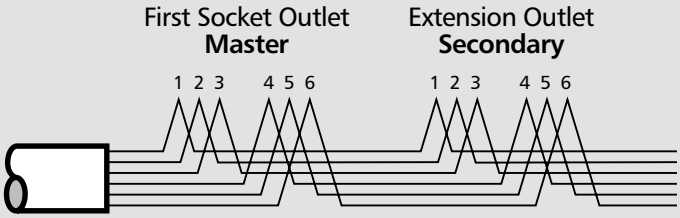

RJ11/12 Wiring Scheme

PIN NO.	STRIPPED COLOUR WIRE	SOLID COLOUR WIRE
1	WHITE / green	WHITE
2	WHITE / orange	Black
3	BLUE / white	Red
4	WHITE / blue	Green
5	ORANGE / white	Yellow
6	GREEN / white	Blue

Note: Main wire colour is shown in capitals

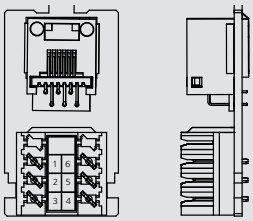

K5887

Digital TV and Radio

Standards and approvals

All TV outlets comply with BS 5733 and BS EN 50083 where applicable.

TECHNICAL SPECIFICATION

SINGLE OUTLETS

TV/FM IEC MALE OR FEMALE
DC-950MHz

SATF-TYPE
DC-1.75GHz

TV/FM/DAB/SAT PRODUCTS FOR DIGITAL RADIO

TV
Diplexer: 5-65MHz
470-862MHz
Triplexer: 5-65MHz
470-862MHz

FM/DAB
Diplexer: 87.5-230MHz
Triplexer: 87.5-230MHz

SAT OR SAT1
Diplexer: n/a
Triplexer: 950-2300MHz

SAT2
Diplexer: n/a
Triplexer: 5-2300MHz

Description

There is one range of diplexer and triplexer products, which is suitable for digital radio (DAB).

Diplexer modules are for connecting to a single co-axial aerial down lead carrying combined TV and FM signals. The filtering in the diplexer splits out the appropriate signal and feeds it to the relevant output connection. A DC control path is provided in the TV signal path through the diplexer.

Triplexer modules are for connecting to a single co-axial aerial down lead carrying combined TV, FM and SAT signals. The filtering in the triplexer splits out the appropriate signal and feeds it to the relevant output connection. A DC control path is provided in the SAT signal path through the triplexer.

The quad outlet contains a triplexer together with a separate satellite output, for use with Sky+, or more complex installations.

Telephone secondary outlets are provided on some products for connection of telephone or for interactive TV applications.

Dimensions (mm)

Euro 1 module

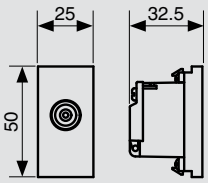

Euro 2 module Triplexer and Quadplexer

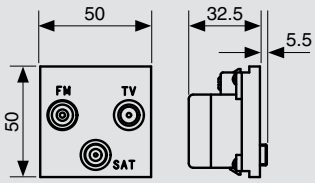

Note: Minimum box depth: 47mm

Installation

- When installing the TV Co-axial cable ensure that all cable bends are smooth so that the inner insulation is not crushed or squashed. Otherwise the TV signal quality may be affected.
- Not suitable for loop-in loop-out installations.
- Use CT100 cable (or equivalent.)

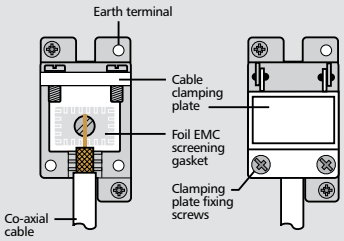

TV Co-axial cable stripping details

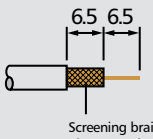

Screening braid to remain in place over the inner insulation

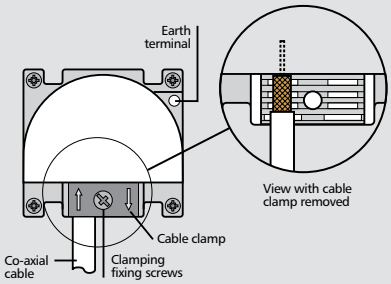

Features

- Non Isolated
- Fully screened
- Earth terminal provided on TV modules

Elements Collection Technical

TV/FM and Satellite Socket Outlets

Installation (TV sockets)

Product performance, systems compatibility

Isolated Outlets are intended for use where safety isolation (rated at 2000V ac) is required to provide protection against faults occurring within any mains powered product used on different parts of the distribution system. They are not suitable for use in systems where DC signals are passed through the socket, (e.g. where masthead/headend equipment is controlled by receiver/ decoder equipment).

Diplexer Outlets are used in distribution systems where both TV and FM band signals are combined on a single aerial downlead. The filtering in the diplexer separates the appropriate signals and feeds them through to the relevant output connection port.

Cable Routing and Use of Cable Clamp

Sharp bends in the cable must be avoided during installation. The single TV/FM socket is fitted with a cable clamp that can be fixed on either side of the termination position to facilitate this.

When tightening the screening braid clamps ensure that the cable is firmly gripped and that the inner insulation is not squashed flat beyond a slight oval shape.

Safety Information

TV outlets or modules must not be installed in the same enclosure as equipment rated in excess of 50V, (e.g. mains rated 13A sockets or switches).

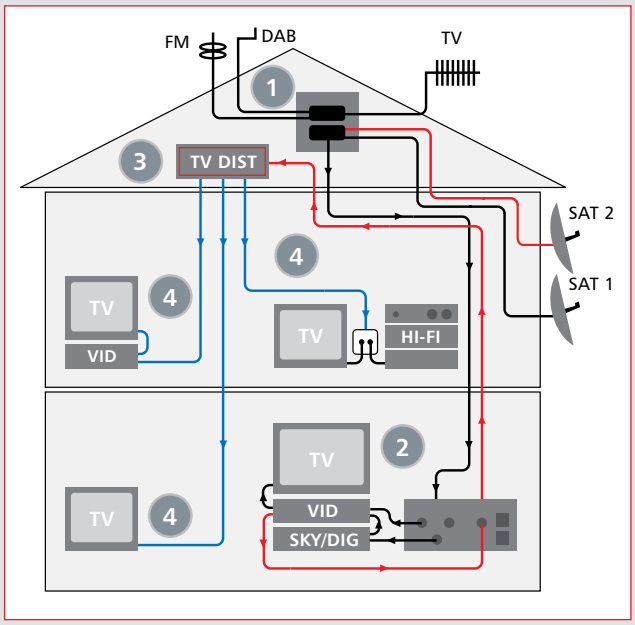

Method of installation of TV and FM aerial connection by using MK co-axial socket outlet and only one downlead.

Conventional distribution system for TV and FM signals using a single aerial downlead.

1. The signals from the TV and FM aerials and the satellite dish are combined together using two products. The first combines the TV and FM signals and the second adds the Sky signal to the TV/FM signal and provides a DC control path to power the LNB unit on the satellite dish. (These products are not supplied by MK).

   The single aerial down lead feeds into the triplexer (black lines in wiring diagram).
2. The separated satellite signal is then fed to the decoder. The decoded satellite signal is then fed into the VCR along with the TV signal from the Triplexer. The output signal from the VCR then feeds into the TV and also back to the single outlet and onto the distribution amplifier (black lines in wiring diagram).
3. The single cable back-feed then feeds back to the input of a multi way distribution amplifier, (typically located in the loft or garage) (red lines in wiring diagram).
4. Each individual output from the distribution amplifier is then fed to the individual rooms in the house to a standard TV (single or diplexer) outlet to which the TV/ VCR and/or Hi-Fi can be connected (blue lines in wiring diagram).

PIR Detector

Standards and approvals

IEC60669-2-1

TECHNICAL SPECIFICATION

ELECTRICAL

VOLTAGE RATING
220-240V

CURRENT RATING
10A

LOAD TYPE
Incandescent Light (resistive Load): 2300W

HV HALOGEN LAMPS
1500 W

INDUCTIVE LOAD
600VA

ELECTRONICS BALLAST
3 x 58W (max. inrush current 80A/20ms)

CONTACT GAP
Micro gap

TERMINAL CAPACITY (SCREWLESS TERMINAL)
Stranded Cables
1 x 2.5mm²

Solid Cables
1 x 2.5mm²
1 x 4mm²

EARTH TERMINAL (SCREW TERMINAL)
4 x 2.5mm²
3 x 4.0mm²
2 x 6.0mm²

PHYSICAL

AMBIENT OPERATING TEMPERATURE
0°C to +35°C

MAX INSTALLATION ALTITUDE
2000 metres

IP RATING
IP2X

Installation

For optimal detection and control sufficient distance (1M minimum) should be maintained between the PIR Detector and lighting fixtures in order to prevent undesirable motion detector switching. The optimal installation height is 0.8M – 1.2M. Installation in areas where excessive air movement occurs can cause false activations.

BOX TYPES

	Flush	Flush (for extra wiring space)
1 GANG	866ZIC (35mm)	877ZIC (47mm)

Description

The Elements PIR Detector will deliver energy savings and lighting usage management in a wide range of applications. Offering effective and efficient detection for control of lighting, this stand alone solution is easy to install and program, with the additional benefit of variable time delay from 30 minutes to permanently on.

Features

- 16 standard finishes
- Many more customized combinations of standard colours, materials and finishes available
- Bespoke colour materials and finishes available via the Design Service
- Detection range of 8M
- Delivers energy saving by switching lights off when occupancy is not detected
- Offers safety and comfort by switching lights on when occupancy is detected
- Easy to install and program
- Time delay from 30 minutes to permanently on

Frontplate and Module Installation

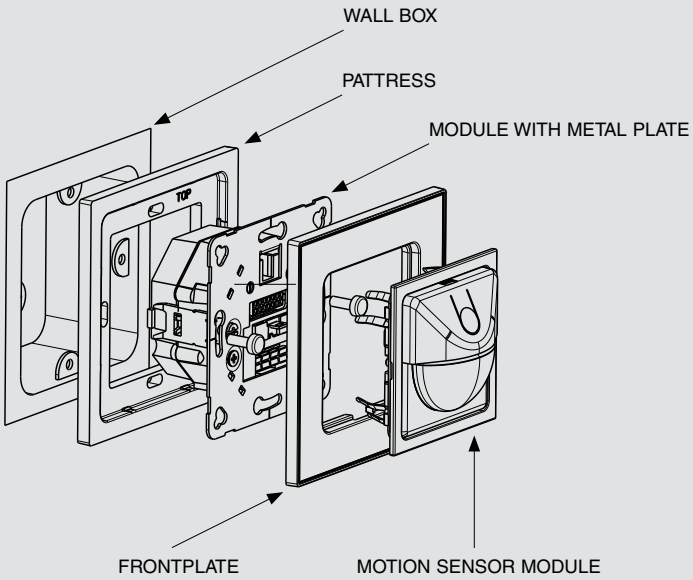

Dimensions (mm)

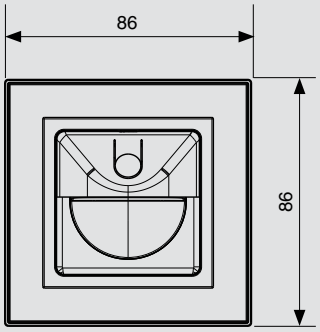

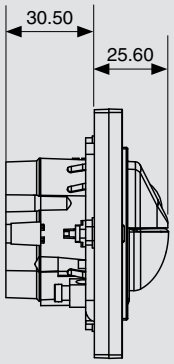

Elements Collection Technical

Echo™ Transmitters

Standards and approvals

BS EN 60669-1, BS EN 60669-2-1, ESTI EN 301 489-1 & -3, ESTI EN 61000-6-2, ESTI EN 300 220-3, EN 60950-1

TECHNICAL SPECIFICATION

PHYSICAL

OPERATING TEMPERATURE
-5°C + 40°C

OPERATING FREQUENCY:
868.3 MHz

IP RATING
IP2X

MAX INSTALLATION ALTITUDE
2000m

Mounting Transmitters

- All transmitters can be mounted to any 1 gang back box
- All transmitters can be mounted directly to the wall surface

Description

The Elements Echo Transmitters are part of an innovative range of entirely wireless, batteryless and self powered switches. The Elements Echo Transmitters communicate with Echo receivers to switch mains power. Elements Echo Transmitters send an RF signal at 868.3 MHz, the unique feature of these transmitters is the signal transmission is made with no need for mains power or batteries.

Features

- 16 standard finishes
- Many more customized combinations of standard colours, materials and finishes available
- Bespoke colour materials and finishes available via the Design Service
- Wireless and batteryless, using RF technology with ranges up to 30M in ideal conditions
- The transmitters are quick and easy to install with no need for cabling from the switch to the lighting circuit
- See the Echo range for available receivers

Frontplate and Module Installation

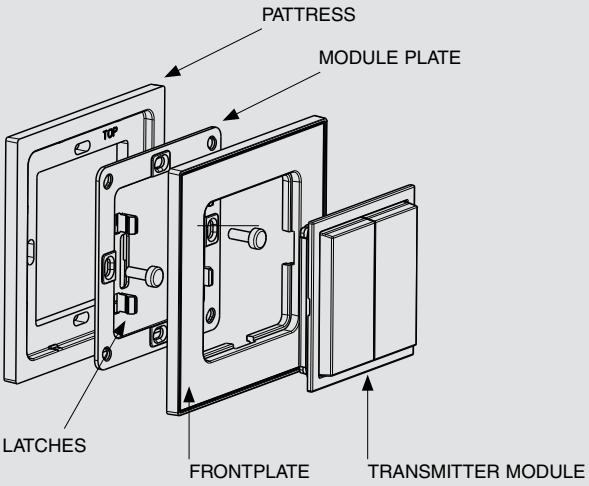

Dimensions (mm)

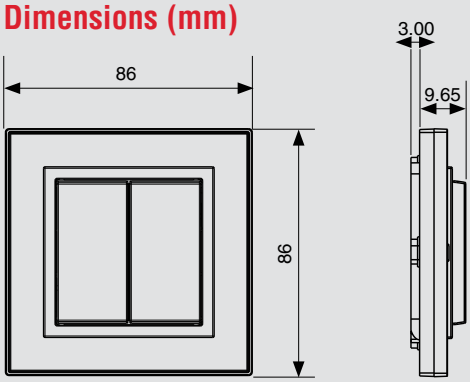

Roller Shutter / Blind Control

Standards and approvals

IEC60669-1

TECHNICAL SPECIFICATION
ELECTRICAL
VOLTAGE RATING 250 VAC
CURRENT RATING 10A
TERMINAL CAPACITY **Stranded Cables** 2 x 2.5mm² 1 x 4.0mm² **Solid Cables** 2 x 2.5mm² 2 x 4.0mm²
EARTH TERMINAL 4 x 2.5mm² 3 x 4.0mm² 2 x 6.0mm²
PHYSICAL
AMBIENT OPERATING TEMPERATURE 0°C to +35°C
IP RATING IP2X
MAX INSTALLATION ALTITUDE 2000 metres

Installation

For optimal performance ensure the product is orientated correctly.

BOX TYPES

	Flush	Flush (for extra wiring space)
1 GANG	866ZIC (35mm)	877ZIC (47mm)

Description

The Elements Roller Shutter / Blind Control will operate a motor run device enabling the control of window coverings.

Features

- 16 standard finishes
- Many more customized combinations of standard colours, materials and finishes available
- Bespoke colour materials and finishes available via the Design Service
- Easy to install

Frontplate and Module Installation

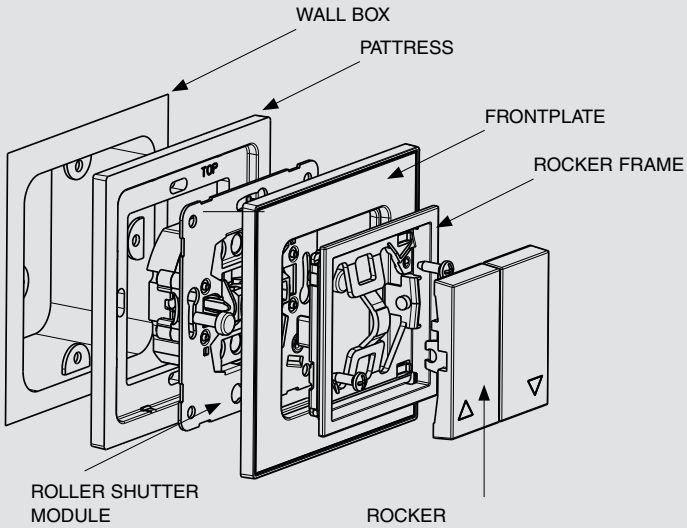

Dimensions (mm)

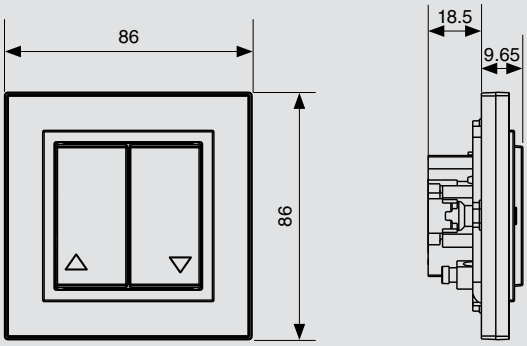

Elements Collection Technical

Multimedia Plates

Standards and approvals

All Elements 13A socket outlets comply with BS 1363: Part 2:1995.

K34209 and K34210 comply with BS 5733:2010.

TECHNICAL SPECIFICATION

ELECTRICAL

VOLTAGE RATING
250V a.c.

CURRENT RATING
13A

TERMINAL CAPACITY
Live, neutral & earth
3 x 2.5mm²
3 x 4mm²
2 x 6mm² (stranded)

PHYSICAL

AMBIENT OPERATING TEMPERATURE
–5°C to +40°C

IP RATING
IP2XD

MAX. INSTALLATION ALTITUDE
2000 metres

MOUNTING BOXES

Combination Plate List Number	47mm Mounting Box
K34206	870ZIC
K34207	870ZIC
K34208	868ZIC
K34209	858ZIC
K34210	869ZIC

Bespoke requirements can be achieved through the MK Design Service to deliver variation in colours, materials, function, finishes and markings.

For more information please visit www.mkelectric.co.uk or call 01268 563720

Description

A range of multimedia plates designed for ease of installation and having all the advantageous design features of the Elements range.

These multimedia socket outlets provide interior designers and installers with a stylish and practical wiring device solution. The range also has larger Euro module frontplates to house eight and twelve single Euro modules without the inclusion of fixed socket outlets. The K34209 multimedia socket outlet, for example allows for the inclusion of up to eight single Euro modules, which could include datacoms, telecoms, plus TV and Satellite modules.

Alternatively, Euro Power Modules i.e. German, French/Belgium and American socket outlets may be used.

Note:

- Pre-configured back boxes are designed for use with the multimedia plates. These back boxes should always be used to ensure alignment of the fixing screws is correct and proper segregation between mains and extra low voltage products is maintained (products are supplied with clip on segregators)
- Back boxes must be installed 10mm sub flush to the wall surface
- Mains operated products and extra low voltage modules must not be installed within the same frontplate aperture. Refer to BS 7671 for details
- When removing the fixing screws and frontplate from an installation to gain access to low voltage modules, please be aware that there will also be access to the mains supply

Multimedia plates allow the use of a variety of power and data modules making them ideal for hotels.

Elements Collection Technical

Features

- 3 pin operated safety shutter
- Printed terminal markings on grey rear mouldings for clearer identification
- Top access, angled terminals make wiring easier and quicker
- 3mm minimum switch contact gap
- Double pole switching
- Additional electrical safety from neutral 'make first', 'break last' feature
- Switch contacts with silver contacts on both surfaces for good continuity
- Backed out and captive terminal screws on pre-fitted sockets
- Pre-configured backboxes to ensure alignment of the fixing screws is correct and proper segregation between circuits is maintained to comply with BS 7671 17th Edition wiring regulations

Installation

Elements socket outlets can only be mounted on a wall. Do not mount or use as a trailing socket or where they may be subject to excessive moisture or dampness.

Install corresponding back box 10mm sub flush to finished wall surface.
Elements multimedia plates are supplied with clip on segregator.

Dimensions (mm)

K34206 and K34207

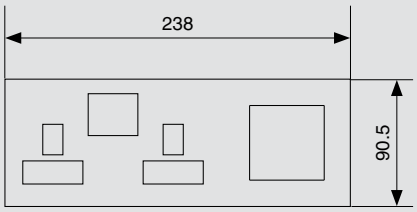

K34208

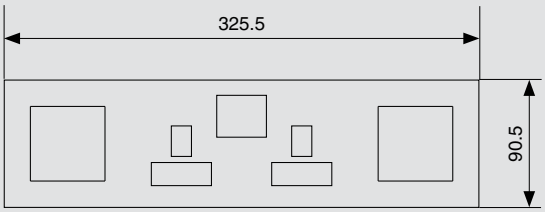

K34209

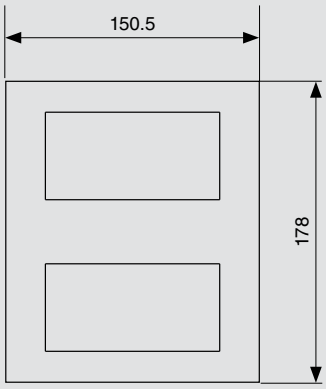

K34210

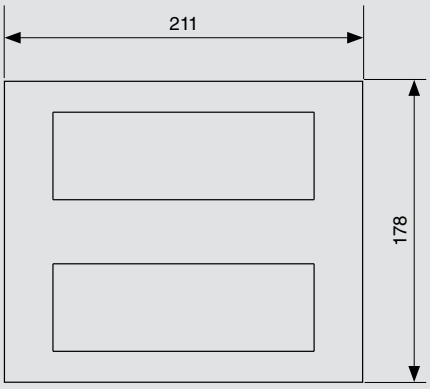

Grid Plus Technical

Modular Switching System

Standards and approvals

Switch modules
BS EN 60669-1:1999

Indicator units
BS 5733:2010

Dimmer switches
Dimmers comply with BS EN 60669-2-1

Accessory modules
Single non-isolated, TV/FM socket outlet, BS 3041-2:1977

Module Dimensions (mm)

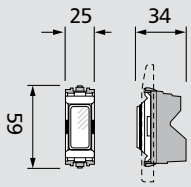

24/240V buzzer units

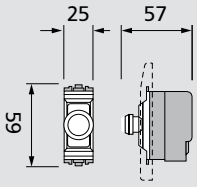

Single dimmer module

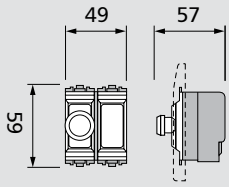

Double dimmer module

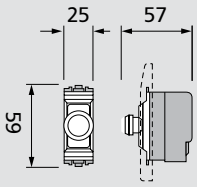

Fluorescent dimmer module

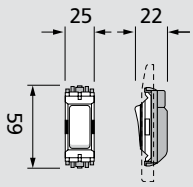

All switch and indicator modules

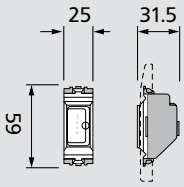

Fuse unit

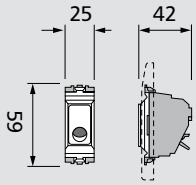

Cord unit

For a full range of corresponding products, see pages 70-97 in the product selector.

Description

Grid Plus is a comprehensive modular switching and monitoring system ideal for a variety of applications within the commercial, public and domestic sectors.

Grid Plus cover plates have the advantageous design features of the MK wiring device ranges and the interchangeable modules also feature many of the wiring and installation benefits common to the MK wiring device ranges.

The system is extremely easy to assemble (see illustration) and modules can be individually changed without re-wiring of complete assembly by removal of frontplate and simply clipping in or out as required. For further installation details see 'Installation' overleaf.

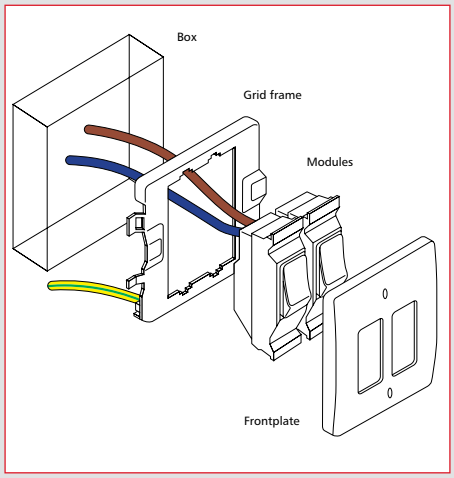

Features

- Grid modules clip fit to frame without special tools
- Modules can be removed/ replaced when grid frame is fixed in position
- Grid Plus frontplates available to match all MK wiring device ranges
- All products are 100% tested before delivery
- Options of neon/filament indicators label in rocker or printed rockers
- Wide variety of switch modules rated at 10 or 20 amps
- Single or double dimmer modules available
- Vast range of grid plates and modules from one source
- Manufactured from pre-galvanised steel to prevent corrosion
- Grid frame earth terminal has 16mm² cable capacity
- Backed out and captive terminal screws
- Up to 12 gang Logic Plus grid frontplates and up to 24 gang in decorative metal finish frontplates
- Top access terminal screws

Grid Plus Technical

Modular Switching System

FRONTPLATE DIMENSIONS

RANGE	MODULES	A	B	C	D
Logic Plus™	1,2,3,4,6,8,12	86	146	206	N/A
Aspect*	1,2,3,4,6,8	86	146	N/A	N/A
Edge™	1,2,3,4,6,8,9,12,18,24	86	146	206	267
Albany Plus™	1,2,3,4,6,8,9,12,18,24	86	146	206	267
Metalclad Plus™	1,2,3,4,6,8,9,12,18,24	86	146	206	267

*Aspect 12 module front plate available through MK Design Service

TECHNICAL SPECIFICATION

ELECTRICAL

SWITCHES

VOLTAGE RATING
250V a.c.

CURRENT RATING
10 or 20 amps – no derating when used on fluorescent or inductive loads

LOAD TYPE
No restriction

TERMINAL CAPACITY
4 x 1mm², 4 x 1.5mm², 4 x 1mm², 3 x 2.5mm², 2 x 4mm², 1 x 6mm²

INDICATOR UNITS

VOLTAGE RATING
24V indicators
min. 21V, max. 36V

240V indicators
min. 200V, max 250V

TERMINAL CAPACITY
as switches

BUZZER UNIT

VOLTAGE RATING (NOMINAL)
240V a.c.
24V a.c.

TERMINAL CAPACITY
as switches

FUSE UNIT

VOLTAGE RATING
250V

CURRENT RATING
13 amps

TERMINAL CAPACITY
2 x 4mm²

CORD OUTLET

VOLTAGE RATING
250V

CURRENT RATING
16 amps

TERMINAL CAPACITY
Supply – 2 x 4mm²
Load – 1 x 1.5mm² multi-strand

DIMMERS

VOLTAGE RATING
230V a.c., 50Hz

LOAD RATING
For single dimmer installations
K4500 min. 40W/VA, max. 400W/320 VA
K4501 min. 40W/VA, max. 220W/180 VA
K4511 min. 40W/VA, max. 220W/180VA LED 4-70W

For multiple dimmer installation see Load Adjustment table, page 531

LOAD TYPES
K4500, K4501 tungsten filament (GLS) lamps
Low voltage lighting electronic or wire-wound transformers
K4511 Good quality LED lamps (10max)

SOFT START
Raises from low to control knob setting in 1-3 secs, (increases lamp life significantly)

TERMINAL CAPACITY
1 x 2.5mm², 2 x 1.5mm²

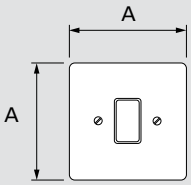

1 module

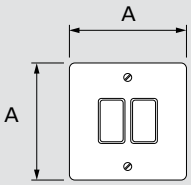

2 module

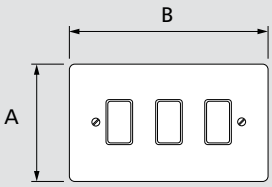

3 module

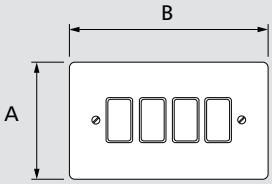

4 module

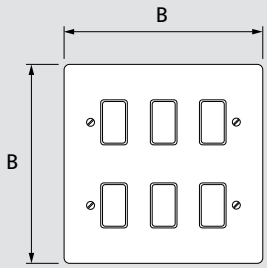

6 module

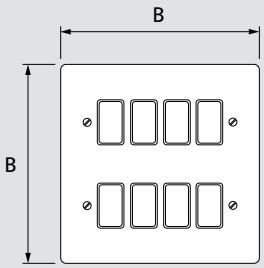

8 module

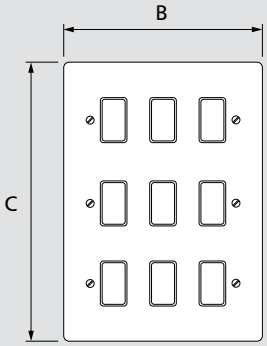

9 module

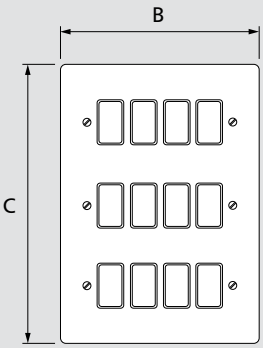

12 module

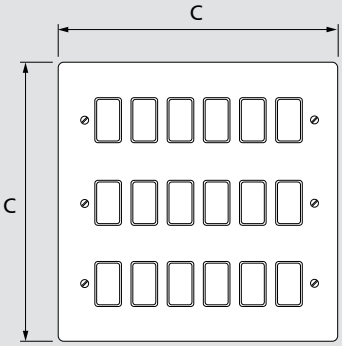

18 module

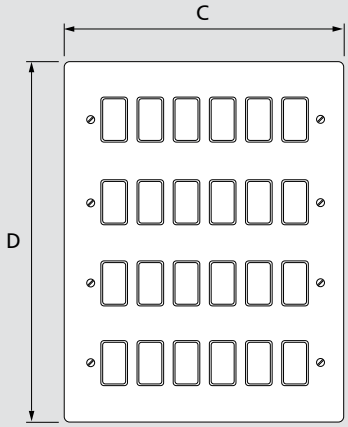

24 module

Grid Plus Technical

Modular Switching System

Standards and approvals

Switch modules

BS EN 60669-1:1999

Indicator units

BS 5733:2010

Dimmer switches

Dimmers comply with BS EN 60669-2-1

Accessory modules

Single non-isolated, TV/FM socket outlet, BS 3041 Part 2: 1977

TECHNICAL SPECIFICATION

PHYSICAL (ALL PRODUCTS)

AMBIENT OPERATING TEMPERATURE
–5°C to +40°C

IP RATING
IP4X

MAX. INSTALLATION ALTITUDE
2000 metres

Installation

General

Cut cables to length and make earth connections to grid. Earth: bond grid frame to metal mounting box. Grid frames are screwed to back box, modules wired as appropriate and simply clipped into grid frame by hand. No tools are necessary. The front plate is screw fixed to the grid frame to finish the assembly.

To remove or change modules, simply remove front plate. Individual modules fit perfectly into the frontplate in flush fitting installations.

Grid mounting

An integral design feature automatically ensures that the modules fit perfectly into the frontplate in flush fitting installations.

Some manual adjustment may be required for surface mounted applications or low profile ranges (Edge™).

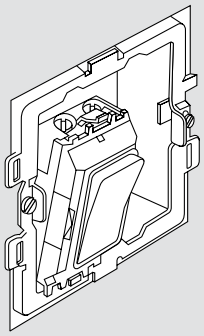

1. Locate bottom tab of module in base of grid.
2. Module pushes into place at top with a 'click.
3. To remove module, press tab at top and lever forward.

Typical mounting arrangement

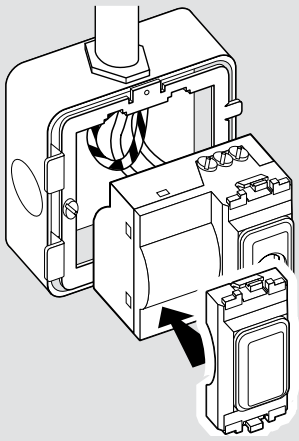

Dimmers

The two module size dimmer can be fitted to any grid mounting frame over 1 gang. The supplied blank module can be placed at the required pitch to fill in the second position on the grid.

To avoid overheating when using more than one dimmer in the same Grid Plus enclosure it is recommended that the dimmers are preferentially mounted on the bottom row on 6, 8, 9, 12, 18 and 24 gang enclosures, before mounting on any other rows and its load adjusted in accordance with the information provided in the Load Adjustment Table 1 at the bottom of the next page.

Dimmer wiring diagram

One-way switching

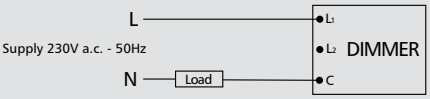

Two-way switching
(only one dimmer can be used)

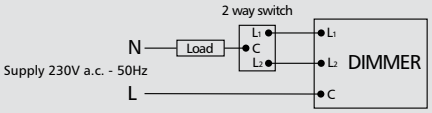

Wires must be connected to the correct Dimmer terminals.
Supply Earth must only be connected to the installation metalwork and not to any of the terminals on the dimmer module.

Rocker window labels

The following labels are available for insertion into window rockers.

air conditioner	water heater	dish washer	store
bedroom	dining area	kitchen	lounge
pool	lights	bar	conference room
office	reception	bell	push
front	middle	bottom	rear
back	top	landing	hall
porch	toilets	ladies	gents
exterior			

Modular Switching System

The simple installation process is shown below.

Spare labels and windows are available.

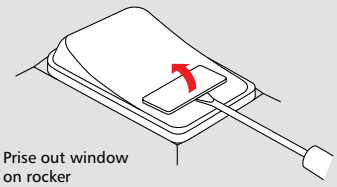

Prise out window on rocker

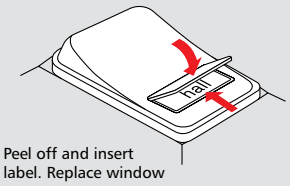

Peel off and insert label. Replace window

TV/FM socket outlets

The TV outlet must not be mounted in the same enclosure as mains voltage exceeding 50V.

Printed Modules

A wide range of pre-printed switches are also available. See pages 194-201 for details.

Grid Plus Technical

Grid Plus Dimmer Switches

Standards and approvals

All Grid Plus dimmer switches comply with the EC Low Voltage Directive: 73/23/EEC, Electromagnetic Compatibility Directive 89/336/EEC. They also comply with BS EN 60669-2-1 and BS EN 55015.

TECHNICAL SPECIFICATION

ELECTRICAL

MAINS SUPPLY VOLTAGE
230V a.c. (Nominal)

MAINS SUPPLY VOLTAGE RANGE
216V a.c. to 253V a.c.

MAINS SUPPLY FREQUENCY
50Hz

TYPE OF LOADS
Intelligent Dimmers

K4500, K4501
Fused GLS Tungsten Filament lamps to BS EN 60064: 1996 and BS EN 60432-1,2 rated at 230/240V. Dimmable wire wound or electronic Low Voltage Transformers of good quality. Can also be used with good quality mains voltage halogen lamps incorporating GU10 bases. Please check with lamp manufacturer to determine suitability.

K4511
Is suitable for use with good quality dimmable LED lamps (10max). Due to market variability in LED lamp design it is advisable to check with lamp manufacturer to determine suitability. For best performance LED manufacturers lamps should not be mixed on one circuit.

Note: Transformers must be suitable for dimming leading or trailing edge dimmers.

Warning: These dimmer switches are not suitable for use with Fluorescent Lamps or CFL Lamps.

PHYSICAL

AMBIENT OPERATING TEMPERATURE
0°C to +40°C

IP RATING
IP4X

MAX. INSTALLATION ALTITUDE
2000 metres

Multiple Dimmer Installation Load Ratings

When installing more than one dimmer in multi-gang plates, the power rating must be reduced to allow for heat generation.

See Table 1 page 531.

Description

Intelligent Dimmer Switches

Dimmer Switches belonging to this category employ the latest, state of the art, micro-controller base electronic circuity and use current sensing to compute the load conditions. These products show progressive reaction to Over-load conditions, depending on the extent of Over-load – see Table 1. List numbers belonging to this category are identified by the suffix letters LV, e.g. K4501 WHI LV. These Dimmer Switches employ one pole change over switches to facilitate two way switching.

MK Grid Plus Dimmer Switches are not suitable for use with Fluorescent Lamps or CFL Lamps.

FEATURES

MK Grid Plus Dimmer Switches incorporate the following advanced features

- Suitable for dimming Low Voltage Halogen lamps via suitable, fully dimmable electronic or wire-wound transformers. See Table 2 for the number of transformers allowed to be used with each dimmer
- Can be used with good quality mains voltage halogen lamps incorporating GU10 bases. Please check with lamp manufacturer to determine suitability
- Unidirectional current sensing. While being used with wire-wound transformers for low voltage lighting, these dimmer switches continuously monitor the drive conditions to the transformers, which require essentially, bi-directional a.c. supply at their input terminals. If, due to some fault condition, the supply to the wire-wound transformer is detected to be unidirectional, which could result in over-heating and/or damaging the transformer, the dimmer switches' circuitry automatically stops supplying the transformer after a few cycles of detected unidirectional supply
- Soft Start, which gradually increases the light output from the load over 1 to 3 seconds after switch on. The Soft Start feature is also particularly beneficial when used to dim Mains Voltage Tungsten Halogen lamps which have inherent very high inrush current at switch on
- Grid Plus dimmer switches which are rated for LED load types incorporate a minimum brightness adjustment. This setting may be performed without removing any fixing screws to account for LED load performance. Please refer to the relevant installation instructions on mkelectric.co.uk

Grid Plus Dimmer Switches

TABLE 1 – LOAD ADJUSTMENT FOR GRID PLUS DIMMERS

FRONTPLATE SIZE, NUMBER OF GANGS	2	3	4	6	8	9	12	18	24
Max Power/Load per Row – Tungsten GLS Lamps – W	400	480	480	480	480	480	480	720	720
Max Power/Load per Row – Mains Tungsten Halogen Lamps or Low Voltage Transformers – W or VA	320	380	380	380	380	380	380	580	580
Max Power/Load for Total Plate – Tungsten GLS Lamps – W	400	480	480	740	740	940	940	1440	1800
Max Power/Load for Total Plate – Mains Tungsten Halogen Lamps or Low Voltage Transformers – W or VA	320	380	380	600	600	750	750	1155	1440

K4511 – No derating is required for LED load types.

TABLE 2 – OVERLOAD REACTION

40-400W CIRCUIT	40-300W CIRCUIT	COMMENTS
Overload management	Overload management	This is the minimum controlled voltage
40-400W nominal	40-220W nominal	
40-500W function without dimming	40-275W function without dimming	
> 500-700W dim to 68V±8V r.m.s.	> 275-375W dim to 68V±8V r.m.s.	
> 700W switch off	> 375W switch off	

Dimensions

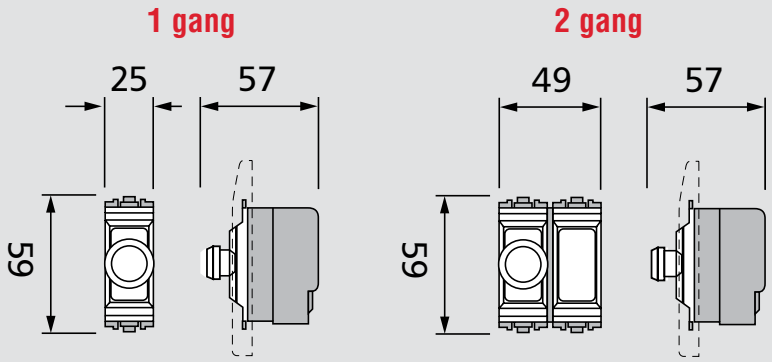

TABLE 3 – GRID PLUS INTELLIGENT DIMMER SWITCHES

	RATING	MAX NO. OF TRANSFORMERS
1 module dimmer switch	40-220W (LV rating 40-180VA)	3
2 module dimmer switch	40-400W (LV rating 40-320VA)	5

Do not connect more than the maximum number of transformers stated for each dimmer. Grid Plus dimmer switch ratings are for each dimmer when installed singly.

In multiple installations, each dimmer switch must be de-rated – see Table 1 above.

Wiring Diagrams

One-way switching

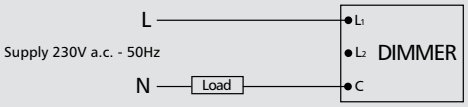

Two-way switching
(only one dimmer can be used)

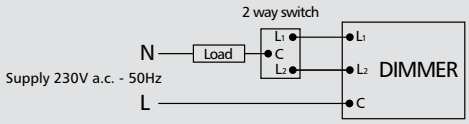

Wires must be connected to the correct dimmer terminals.
DO NOT connect earth to dimmer.

Fluorescent dimmer

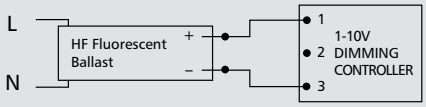

Wires must be connected to the correct dimmer terminals.
DO NOT connect earth to dimmer.

Fluorescent Dimmer

MK Fluorescent dimmers are low voltage controllers that require only a single two-core wire connection to 1-10V controllable ballast inputs. The dimmer operates by applying a variable resistance to the ballast 1-10V control input.

We recommend using a separate on/off switch to isolate the luminaire(s) in use.

Features

Preset adjust to set minimum light level. Preset adjust for use with multiple dimmable ballasts.

Up to four ballasts can be connected to one dimmer.

Grid Plus Technical

Minimum Brightness Adjustment for LED Intelligent Dimmers

The light output of some LED lamps may appear to be too dim or invisible when the dimmer knob is at the minimum dim level. Follow the steps below to adjust the minimum brightness level. This feature is primarily for adjusting the minimum brightness level of the LED lamp although it can be used for other load types.

For a double gang dimmer, the light level of each gang has to be adjusted separately.

Step 1 – Access To Programming Mode

1. Push the dimmer knob so that it is in OFF state.
2. Set the dimmer knob to minimum level.

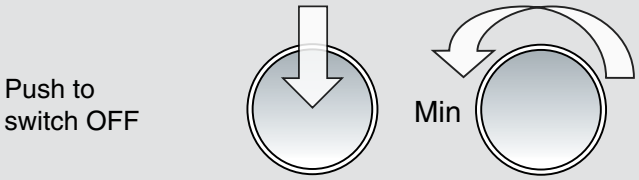

3. Turn on the dimmer and immediately rotate the knob 3 times in full rotary span within 5 seductions.

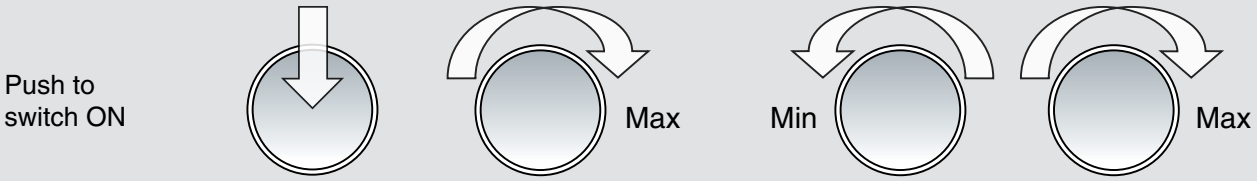

NOTE: Wait for 3 seconds, the lamp will then dim to minimun before automatically brightening to about 30% level. Turning/pushing the dimmer knob before the end of automatic brightening will end access to programming mode

4. Dimmer enters programming mode.

Step 2 – Adjust Brightness Level and Exit Programming Mode

5. Rotate the dimmer knob anticlockwise to adjust the lamp to the desired brightness level.

NOTE: Some LED lamps may not work properly if the brightness level is set too low thus it is recommended to keep the brightness level of the lamp at a visible level. The dimmer will exit programming mode automatically without saving the new setting if there is no dimmer knob movement for 15 seconds. The dimmer will restore its factory default light level.

6. Confirm the new setting and exit programming mode by turning OFF the dimmer.

Step 3 – Success indication (Programming Complete)

7. The next time the dimmer is turned on the lamp will automatically brighten to the maximum level before dimming to the brightness level corresponds to the knob level.

MK LED Dimmer

LED Dimmer from MK Electric offers the widest lamp compatibility for a reliable dimming solution and allows the user to create ambience for comfortable surroundings.

Product Specifications

- MK Electric is the first leading manufacturer to offer a LED dimming solution across its wiring devices range
- Available as a single or double dimmer, in MK Logic Plus and MK Grid Plus*
- MK Logic Plus product is rated 4 – 70W (300W/240VA)
- MK Grid Plus product is rated 4 – 70W (220W/180VA)
- Compatible with tungsten filament, low voltage halogen and dimmable LED lamps
- Greater user control, with a minimum load adjustment control on dimmer switch
- Maximum 10 lamps per circuit
- Intelligent load protection will prevent lamp wattage exceeding rating of dimmer

A Perfect Match

The MK LED Dimmer has been tested with leading lamp manufacturers and is compatible with tungsten filament, low voltage halogen and a wide range of dimmable LED lamps.

Reduce Energy Costs

LED lighting technology delivers enhanced lamp endurance and energy savings. Dimmable LED lamps can increase energy savings, allowing you to reduce energy costs further.

Achieve a Consistent Look

The MK LED Dimmer is available in a wide range of decorative finishes to compliment interior design styles. Matching wiring devices including sockets and switches are available to ensure a consistent look and feel.

Decorative LED Finish Selector

Lacquered Brushed Steel (LBS)	Brushed Stainless Steel (BSS)	Brushed Chrome (BRC)	Textured Iron (TIR)	Textured Copper (TCO)	Desert Bronze (DBZ)	Antique Brass (ABS)
Polished Chrome (POC)	Silver Anodised Aluminium (SAA)	Polished Brass (PBR)	Satin Gold (SAG)	Lustrous Black (LBK)	Lustrous Ivory (LIV)	Porcelain White (WHI)

*Grid Plus range is available in 14 colour options, with black or white inserts.
The Module is designed to be used with MK Electric's decorative range of Aspect, Edge, Albany Plus cover plates.

High Power Dimmer Technical

Standards and approvals

All High Power Dimmer modules comply with EN 60669-2-1

TECHNICAL SPECIFICATION

ELECTRICAL

MAINS SUPPLY
220-240V / 50Hz
220V / 60 Hz

TYPE OF LOADS
Fused GLS Tungsten filament lamps. Dimmable wirewound or electronic low voltage transformers of good quality. Inductive loads (i.e. conventional wire-wound transformers, etc.) must not be connected to the trailing edge dimmers.

Warning: These dimmer modules are not suitable for use with fluorescent lamps or energy saving lamps.

PHYSICAL

AMBIENT OPERATING TEMPERATURE
-5°C to +40°C

REDUCTION OF THE DIMMER POWER

If this product is used in an ambient temperature exceeding 40°C, the maximum allowable load will need to be reduced according to the table below. This will prevent the internal thermal protection in the product from activating and switching the load off.

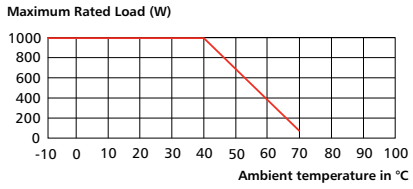

Description

These dimmer modules are designed for mounting into distribution and consumer units containing 35mm Din rail according to EN50022. All master and slave dimmers must be connected to the same supply phase. Key points to observe during installation:

- The mains supply to the dimmer(s) must be protected by a suitable fuse or MCB rated no greater than 16A
- Do not exceed maximum control line length of 100m and do not run slave control lines parallel to mains and network cables
- Always observe the transformers recommended loading guidelines
- Load transformers at or close to their full rated capacity. Do not connect a small load to a larger transformers, (e.g. a 35W lamp on a 600VA transformer)
- Ensure that slaves are wired to the correct control terminals and that the polarity is observed

Note: The outputs of the K1402M and K1402S trailing edge dimmers may be connected in parallel to drive a single load greater than 1kW/900VA.

Control Wiring for operating Modes 1-6 (K1400) and Modes 1-7 (K1401/K1402)

Control switches T1-3 should be push-to-make momentary contact switches.

Up to 10 operating switches may be wired in parallel with Neon indicators being allowed on control line T1 only.

Example1: Multiple control buttons:

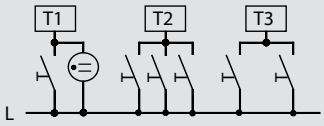

Example 2: Wiring for Multiple Master Dimmers with common Central-ON and Central-OFF

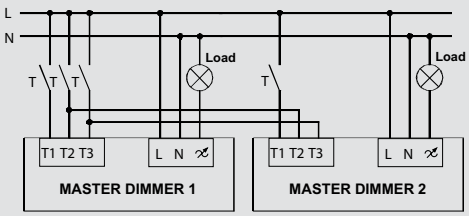

T1 = Separate Dimming control for each master
T2 = Central-ON for both master dimmers
T3 = Central-OFF for both master dimmers

Connection Diagram

Operating Mode Selector Switch

Slave Connection Terminals

Control Wiring for operating Mode 7 (K1400) and Mode 8 (K1401/K1402)

Control switches T1 should be a standard single pole light switch with dimming via the rotary 0/1-10V potentiometer connected between 0-10V and Gnd on the Master dimmer.

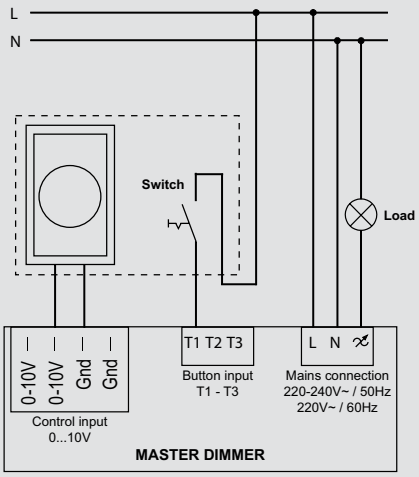

High Power Dimmer Technical

K1400M

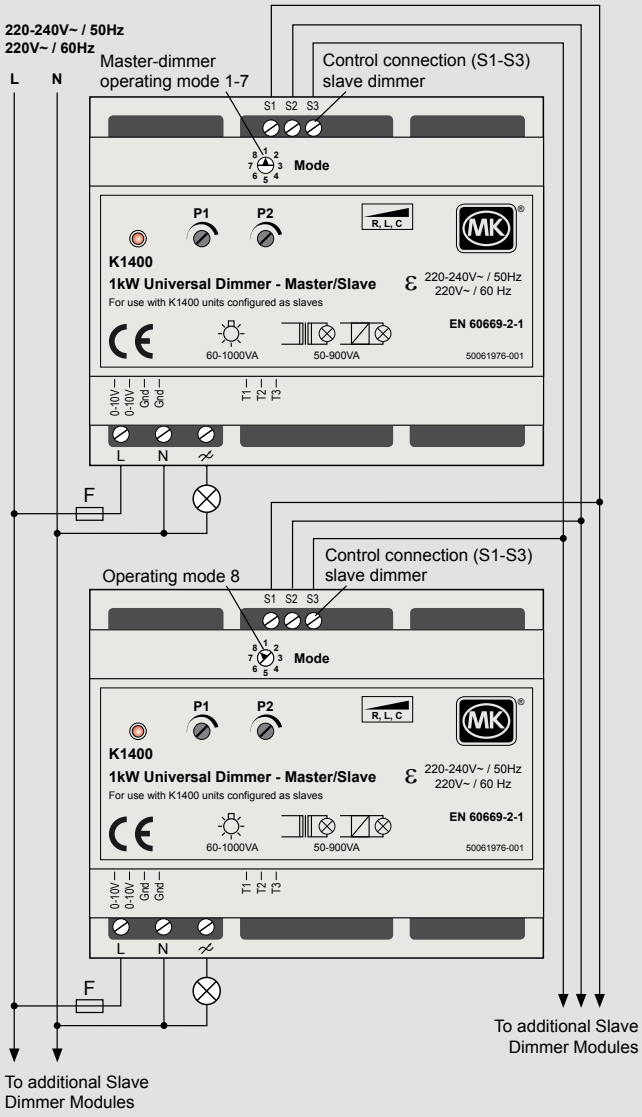

K1401M

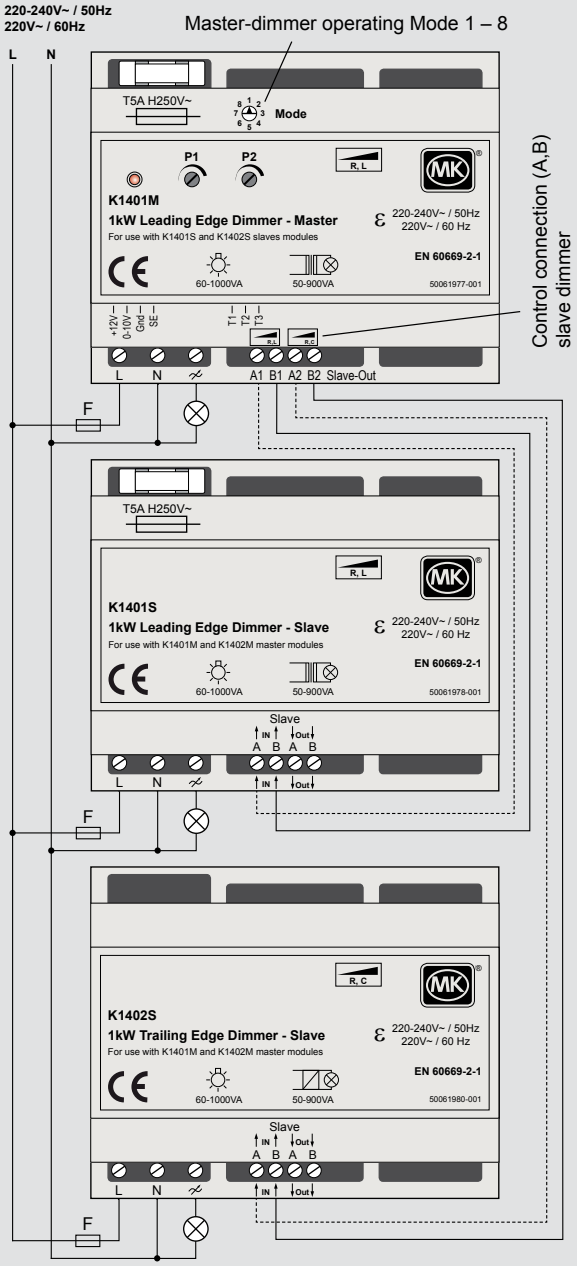

For a full range of corresponding products, see pages 208-210 in the product selector.

High Power Dimmer Technical

K1402M

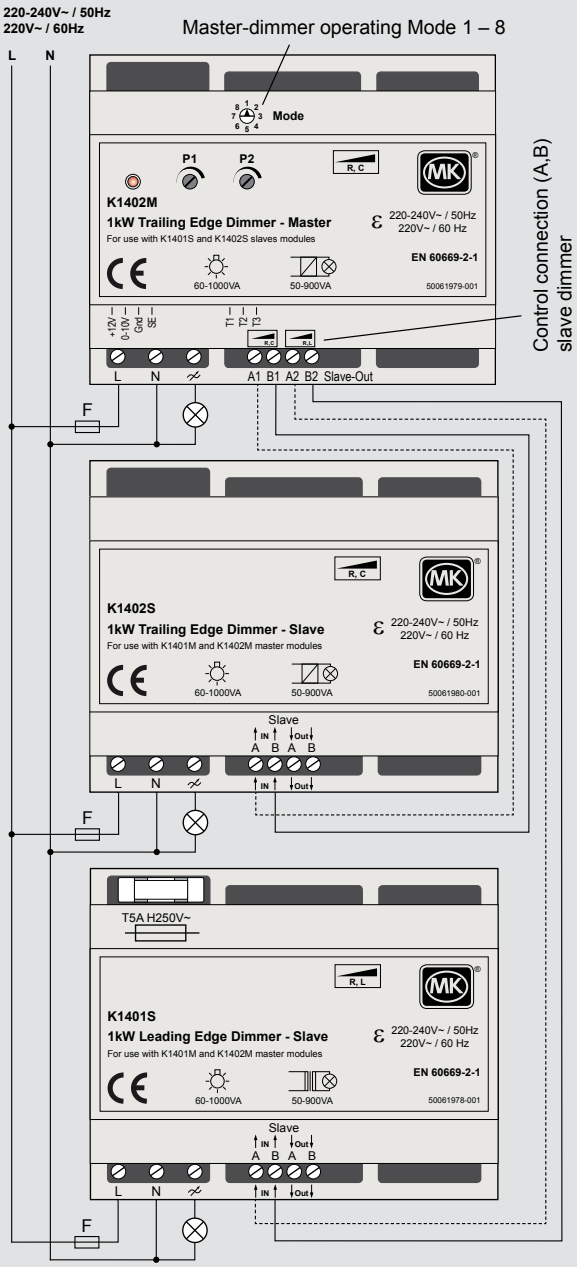

PRODUCT APPLICATION

EDGE SINGLE DIMMER IN GOLD PLATED BESPOKE FINISH

Available on a worldwide basis, the MK Design Service is supported by a dedicated team to ensure the seamless delivery of your chosen products.

To find out more visit www.mkelectric.co.uk

Duraplug® Technical

Plugs and Adaptors

Standards and approvals

All 13 Amp Duraplug® rubber plugs conform to BS 1363/A Part 1:1995. The plugs are third party approved and licensed by ASTA.

Round pin plugs comply with BS 546:1950.

TECHNICAL SPECIFICATION

TERMINAL/CABLE SIZE

LIST NO.	MAXIMUM CABLE SIZE	
	OUTER DIAMETER OF CABLE (MM)	CONDUCTOR C.S.A. (MM^2)
PF133	11.0	1.5
P53	9.4	0.75
P153	11.0	1.5

Description

13 Amp plugs

All Duraplug® 13 Amp plugs are supplied with 13 Amp fuses, and can be used on ring and radial circuits; however, alternative fuse ratings are available on special order.

Round pin plugs

Available unfused at 5 and 15 amp.

For a full range of corresponding products, see pages 236-239 in the product selector.

Lead Connectors, Extension Leads, Portable Sockets and Cable Couplers

Standards and approvals

2 pin Duraplug® lead connectors comply with BS 5733:2010.

3 pin Duraplug® lead connectors comply with BS 5733:2010.

All 13A Duraplug® trailing socket outlets comply with BS 1363/A Part 2:1995.

15A Round pin Duraplug® trailing socket outlets comply with BS 5733:2010 and BS 546 for plug pin aperture and engagement face dimensions.

All 13A Duraplug® portable socket outlets comply with BS 1363/A Part 2:1995.

Cable Couplers comply with BS 5733:2010. (BS 1363 pin centres for 13A, BS 546 pin centres for 5A and 15A).

Replacement fuses where fitted are to BS 1362.

Cables to BS EN 50525-2-11 (H05VV-F).

TECHNICAL SPECIFICATION

ELECTRICAL

VOLTAGE RATING
250V a.c.

CURRENT RATING
As 'Product range' table

TERMINAL CAPACITIES
Lead connector – 1.0mm² conductor
Trailing/Portable socket – 1.5mm² conductor

MAX. CABLE CAPACITY
Lead connector – LCP102: 2-core insulated cable with 1.0mm² conductors, LCP103: 3-core insulated cable with 1.0mm² conductors. 11mm overall diameter
Trailing/Portable sockets – 3-core insulated cable with 1.5mm² conductors, 11mm overall diameter

PHYSICAL

AMBIENT OPERATING TEMPERATURE
–5°C to +40°C

MAX. INSTALLATION ALTITUDE
2000 metres

Installation

Duraplug® products should not be allowed to lie in excessively damp areas, e.g. wet grass, puddles etc. Care must be taken to avoid contact with petroleum spirits.

For added safety trailing sockets should be used in conjunction with a residual current device (RCD).

Description

A range of tough, rewirable lead connectors for use with extension leads for domestic, garden and light workshop applications. Two pin lead connectors are only for use with double insulated class 2 appliances. Three pin lead connectors must be used with earthed appliances.

Filtered socket only

Protects electronic equipment by filtering mains borne interference such as Voltage spikes. This product complies with the LV (72/23/EEC) directive.

Filtered Response Characteristics

Mains filter rated at 250v RMS and 0.15µF

Varistar (Transient Voltage Suppressor) has a more constant voltage 275v ac

Clamping voltage @ 40A: 665v

Milliwatt constant: 800

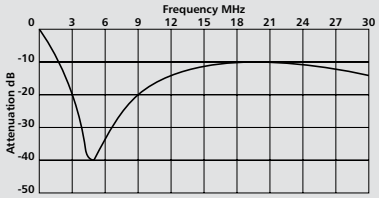

FEATURES

Lead connectors

- Manufactured with a thermoplastic elastomer cover and polypropylene inserts
- Integral cable grips
- Retaining lugs to prevent accidental disconnection

Trailing sockets

- Manufactured from tough ABS/ Polycarbonate with rubber cover. FC153 is all-rubber construction
- All internal component parts are retained in the base for ease of wiring
- Visible red nylon shutters

Portable sockets

- Manufactured from high impact resistant ABS/Polycarbonate
- Equal length wire stripping for ease of wiring
- Visible red nylon shutters
- Optional wall mounting holes

Duraplug® Technical

Extension Leads

TECHNICAL DATA GUIDE

PRODUCT CODE	SOCKET OUTLETS	CABLE LENGTH CABLE	CABLE SPECIFICATION	PLUG TYPE	PLUG FUSE RATING
EXL135WHI	13A 4-gang socket with fuse and neon, manufactured from high impact resistant ABS/Polycarbonate thermoplastic. BS 1363A Part 2:1995. Colour white	2	1.25mm² <HAR> 3-core PVC insulated cable to BS EN 50525-2-11 (H05VV-F). Colour white.	Duraplug® Rubber cover type PF133. Colour white.	13
EXL135BLK	13A 4-gang socket with fuse and neon, manufactured from high impact resistant ABS/Polycarbonate thermoplastic. BS 1363A Part 2:1995. Colour black	2	1.25mm² <HAR> 3-core PVC insulated cable to BS EN 50525-2-11 (H05VV-F). Colour black.	Duraplug® Rubber cover type PF133. Colour black.	13
EXL136WHI	13A 4-gang socket with switch and neon, manufactured from high impact resistant ABS/Polycarbonate thermoplastic. BS 1363A Part 2:1995. Colour white.	2	1.25mm² <HAR> 3-core PVC insulated cable to BS EN 50525-2-11 (H05VV-F). Colour white.	Duraplug® Rubber cover type PF133. Colour white.	13
EXL136BLK	13A 4-gang socket with switch and neon, manufactured from high impact resistant ABS/Polycarbonate thermoplastic. BS 1363A Part 2:1995. Colour black.	2	1.25mm² <HAR> 3-core PVC insulated cable to BS EN 50525-2-11 (H05VV-F). Colour black.	Duraplug® Rubber cover type PF133. Colour black.	13
EXL137WHI	13A 4-gang socket with fuse, switch and neon, manufactured from high impact resistant ABS/Polycarbonate thermoplastic. BS 1363A Part 2:1995. Colour white.	2	1.25mm² <HAR> 3-core PVC insulated cable to BS EN 50525-2-11 (H05VV-F). Colour white.	Duraplug® Rubber cover type PF133. Colour white.	13
EXL137BLK	13A 4-gang socket with fuse, switch and neon, manufactured from high impact resistant ABS/Polycarbonate thermoplastic. BS 1363A Part 2:1995. Colour black.	2	1.25mm² <HAR> 3-core PVC insulated cable to BS EN 50525-2-11 (H05VV-F). Colour black.	Duraplug® Rubber cover type PF133. Colour black.	13

Plugs and Adaptors Technical

Plugs and Adaptors

Standards and Approvals

All 13 Amp standard Safetyplugs conform to BS 1363 Part 1:1995. All 13 Amp Toughplugs conform to BS 1363/A Part 1:1995. The above plugs are third party approved and licensed by ASTA.

Round pin plugs comply with BS 546:1950.

Non-standard Safetyplugs comply with BS 1363 Part 1:1995 where applicable.

TECHNICAL SPECIFICATION

TERMINAL/CABLE SIZE

LIST NO.	MAXIMUM CABLE SIZE	
	OUTER DIAMETER OF CABLE (mm)	CONDUCTOR C.S.A. (mm^2)
646	11.0	1.5
647	11.0	1.5
655	11.0	1.5
502	8.7	0.5
505	9.4	0.75
515	11.0	1.5
639	8.7	0.5
641	9.4	0.75
643	11.0	1.5

Description

13 Amp plugs

MK standard 13 Amp plugs can be used on ring and radial circuits and are available with 13 Amp fuses or 3 Amp fuses.

Round pin plugs

Available unfused at 2, 5 and 15 Amp. They can also be supplied fused, the 15 Amp fitted with a 5 Amp fuse. The British Standard does not allow the 15 Amp plug to be fused higher than 5 Amp. The 15 Amp plug is normally used on a radial system which is protected by a 20 Amp protective device.

Non standard safetyplug

Non standard safety plug utilizing “T” shaped earth pin specifically for use with MK non standard sockets only, e.g. K1257WHI – Logic Plus 1 Gang 13 Amp Switched, Non Standard Socket Outlet.

Adaptors

Both the 13 Amp two way adaptor and the shaver adaptor are designed to BS 1363: Part 3: 1995. The two way adaptor is unfused and has two shuttered 13 Amp socket outlets. The unique feature of the shaver adaptor is the raised wall on the socket face which restricts the size of plug which can be inserted to the typical shaver plug.

For a full range of corresponding products, see pages 240-241 in the product selector.

Masterseal Plus™ Technical

13 Amp Socket Outlets

Standards and approvals

Socket outlets comply with BS 1363 Part 2:1995.

All products allow compliance with BS 7671:2008 when correctly installed.

TECHNICAL SPECIFICATION

ELECTRICAL

VOLTAGE RATING
250V a.c.

CURRENT RATING
13A

TERMINAL CAPACITY
Live, neutral & earth
3 x 2.5mm²
3 x 4mm²
2 x 6mm² (standard)

PHYSICAL

AMBIENT OPERATING TEMPERATURE
0°C to +40°C

IP RATING
IP66

MAX. INSTALLATION ALTITUDE
2000 metres

Description

A range of socket outlets specifically designed for use outdoors or in areas heavily exposed to dust and/or splashing water. Constructed from extremely robust polycarbonate, the range is sealed to IP66 against dust, water and is impact resistant and will completely protect virtually any 13 amp plug* including moulded plugs, allowing safe connection to any appliance.

*When in doubt, please use an MK 13A plug or Duraplug.

FEATURES

- IP66 protected to BS EN 60529:1992
- Ideal for gardens, workshops, industry, commercial, public areas, farm buildings, ponds, pools etc
- Easy to install: fixed gasket, captive backed out terminal screws, clearly marked top access angled terminals, push fit knockouts and conduit entries, rear drill holes
- Patented gel seal provides durable water and dust tight seal for improved protection
- Sealed when in use with virtually any standard 13 Amp plug, including those with moulded on plug tops
- Improved catch eases opening and closing during use
- Manufactured from polycarbonate for impact protection
- 3 pin operated safety shutter on socket outlets
- 3mm minimum switch contact gap
- Additional electrical safety from neutral 'make first, break last' feature
- Moulded 'on' indicator flash on switches will not rub off
- Printed terminal markings on grey rear mouldings for clearer identification
- Double pole switching
- Switch contacts with silver contacts on both surface for good continuity
- Products are available in grey, black and white

Boxes

Rear entry back boxes are supplied for surface mounted situations or flush mounting when used with Flush Mounting Bezels (K56502, 1 gang / K56503, 2 gang). These boxes must also be used if cable or conduit enters the enclosure from the rear.

IP66 Protection

Each digit in the IP (Ingress Protection) rating denotes resistance to dust and water.

The Masterseal Plus™ IP66 rating breakdown is as follows:

IP COMPARISON

IP56	SOLID PROTECTION	LIQUID PROTECTION
	Dust protected. Ingress of dust is not entirely protected, but it must not enter in sufficient quantity to interfere with the satisfactory operation of the equipment. Complete protection against contact	Powerful jets of water against the enclosure from any direction shall have no harmful effects
IP66	**SOLID PROTECTION**	**LIQUID PROTECTION**
	Dust tight. No ingress of dust, complete protection against contact	Powerful jets of water against the enclosure from any direction shall have no harmful effects

For a full range of corresponding products, see pages 242-249 in the product selector.

Masterseal Plus™ Technical

13 Amp Socket Outlets

Dimensions (mm)

1 gang / 2 gang with fixing dimensions

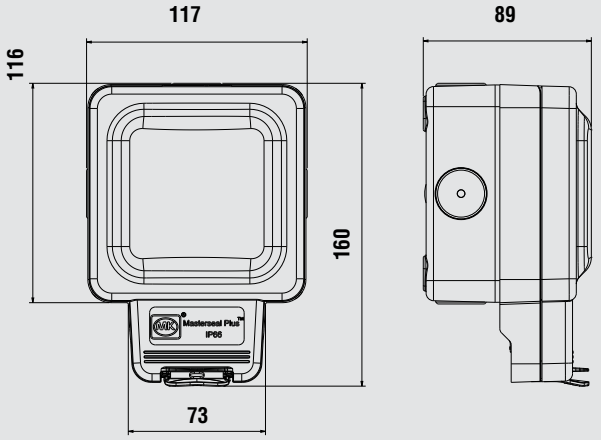

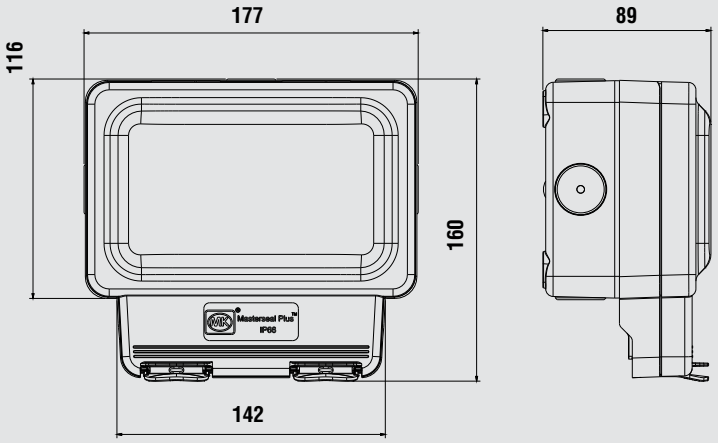

Flush Mounting Bezels

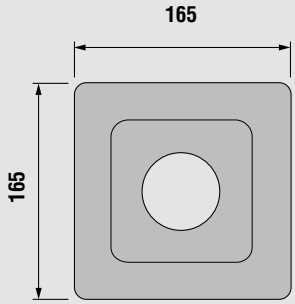

K56502

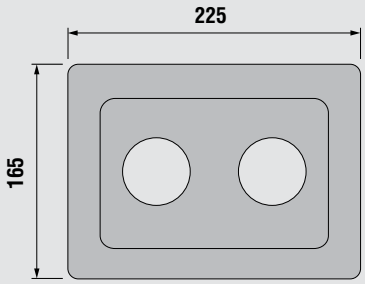

K56503

Flush Mounting Bezel Cut-outs

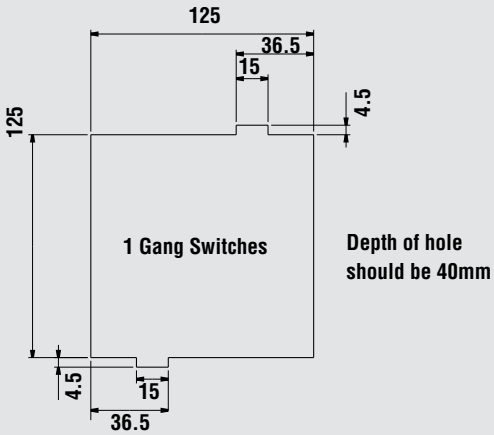

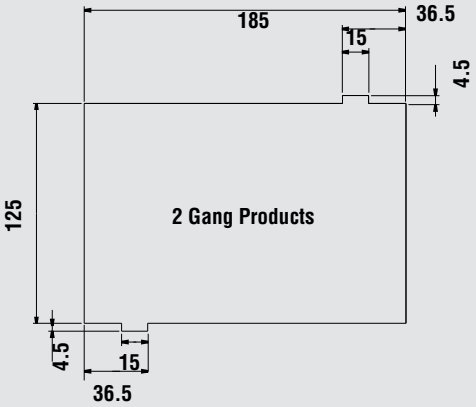

Masterseal Plus™ Technical

Timer Socket Outlet

Standards and approvals

Socket outlet complies with BS 1363 Part 2:1995.

Enclosure conforms to BS EN 60529 IP66

Timer module complies with IEC 60730-1 IEC 60730-2-7, EN 55014-1:2000, EN 55022, EN 61000-3-2, EN 61000-4-2, EN 61000-4-4, EN 61000-4-5, EN 61000-4-6, EN 61000-4-11

TECHNICAL SPECIFICATION

ELECTRICAL

SUPPLY VOLTAGE
230V a.c.

SUPPLY FREQUENCY
50Hz

CURRENT RATING FOR SOCKET OUTLET
(RESISTIVE) 13A

TERMINAL CAPACITY
Supply Line, Neutral and Earth
3 x 2.5mm²
3 x 4mm²
2 x 6mm²

PHYSICAL

AMBIENT OPERATING TEMPERATURE
0°C to +40°C

IP RATING
IP66

MAX. INSTALLATION ALTITUDE
2000 metres

Timer module

The product employs an electronic timer module, which switches the Supply Line to the socket outlet, via a single pole relay. 6 ON/OFF cycles per day can be programmed via the buttons on the face of the timer module. Days in the week can be set individually or set to repeat in 4 separate blocks as follows:

1. Monday to Friday
2. Saturday and Sunday
3. Monday to Saturday
4. Monday to Sunday

An Override button is available to switch the load ON/OFF directly, bypassing the timer.

Boxes

Rear entry back box is supplied for surface mounted situations or flush mounting when used with Flush Mounting Bezel (K56503). These boxes must also be used if cable or conduit enters the enclosure from the rear.

* When in doubt, please use an MK 13A plug

Description

This socket outlet, switched by a single pole timer module is specifically designed for use outdoors or in areas heavily exposed to dust and/or splashing water. Constructed from extremely robust polycarbonate, the product is sealed to IP66 against dust and water, and is impact resistant. The product ensures a very high degree of protection for virtually any 13A plug* to BS 1363, allowing safe connection to electrical appliances, which can be switched on and off at pre-determined times.

FEATURES

- Single 13A rated socket outlet switched via the Single Pole timer module
- Weekly Electronic Timer
- 24 hour clock
- Multi-function Liquid Crystal Display (LCD)
- 6 ON/OFF programmes per day
- Individual day selection as well as 4 block day selections
- Supplied with a LOOP terminal in the back box, which has 5 entries for cables
- Override button to switch the load ON/OFF directly, bypassing the timer
- Patented gel seal provides durable water and dust tight seal for improved protection
- Sealed when in use with virtually any standard 13 Amp plug, including those with moulded on plug tops
- Improved catch eases opening and closing during use
- Manufactured from polycarbonate for impact protection
- 3 pin operated safety shutter on socket outlets
- Products are available in grey, black and white

Dimensions

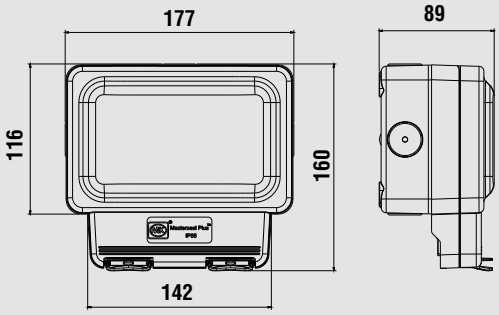

Fixing Dimensions

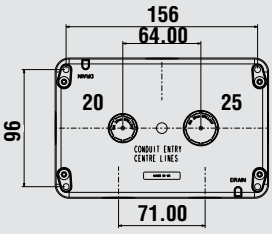

Masterseal Plus™ Technical

Sentrysocket

Compliance with EC Directives, Standards and approvals

All Sentrysockets comply with the following EC Directives and are CE marked:
Low Voltage Directive Electromagnetic Compatibility Directive (89/336/EEC)

Sentrysocket RCD Single Sockets also comply with the requirements of the following standards:
BS 7288:1990
BS EN 50082-1:1992

Sentrysocket RCD Double Sockets also comply with the requirements of the following standards:
BS 7288:1990
BS EN 61543:1996

TECHNICAL SPECIFICATION

ELECTRICAL

RATED VOLTAGE
240V a.c.

CURRENT RATING
13A resistive

RATED TRIPPING CURRENT
30mA

TERMINAL CAPACITY
1 Gang: 3 x 4mm²
2 Gang: 2 x 4mm²

PHYSICAL

AMBIENT OPERATING TEMPERATURE
0°C to +40°C

IP RATING
IP66

MAX. INSTALLATION ALTITUDE
2000 metres

Active control circuits

Incorporate a 'Re-set' mechanism and are mains failure sensitive, ie they will function under all the normal conditions expected of an RCD, but will also trip in the event of a power cut or a sudden, dramatic reduction in mains voltage. This makes them ideal for use where it would be hazardous for equipment to suddenly energise after return of mains power, such as use with rotating machinery and heat developing apparatus.

Passive control circuit

Incorporates a 'Stay-set' mechanism and is mains failure proof, ie it will function under all the normal conditions expected of an RCD and will not trip in the event of a power cut. This makes it suitable for use with freezers or in inaccessible or unmanned locations.

Description

Sentrysocket provides a high level of protection for portable equipment when used in damp environments or outdoors.

FEATURES

- Suitable for most residential, commercial and light industrial applications
- Active and passive control circuit applications
- Comply fully with current Wiring Regulations if installed correctly
- Double pole switching
- Flexible and versatile in use
- Ideal for use with equipment subject to wet weather or high humidity
- They are a.c. and pulsating d.c. fault current sensitives
- Products are available in grey, black and white

Dimensions (mm)

Single and double Sentrysockets are identical in size and shape.
The following dimensions apply

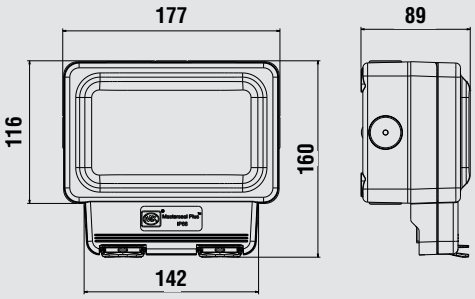

Masterseal Plus™ Sentrysocket is suitable for surface mounting only.

Masterseal Plus™ Technical

16A 2P+E Socket Outlet (Non UK)

Standards and approvals

Complies with IEC 60884-1:2006

TECHNICAL SPECIFICATION

ELECTRICAL

SUPPLY VOLTAGE
250V a.c.

CURRENT RATING
16A

TERMINAL CAPACITY
Supply Line, Neutral and Earth
4 x 1.5mm²
2 x 2.5mm²
2 x 4mm²

PHYSICAL

AMBIENT OPERATING TEMPERATURE
0°C to +40°C

IP RATING
IP66

MAX. INSTALLATION ALTITUDE
2000 metres

16A 2P + E German socket outlet is suitable for surface mounting only.

FEATURES

- IP66 protected to BS EN 60529:1992
- Patented gel seal provides durable water and dust tight seal for improved protection
- Sealed when in use with virtually any plug with a right-angled cable exit, including those with moulded on plug tops
- Improved catch eases opening and closing during use
- Manufactured from polycarbonate for impact protection
- Products are available in grey, black and white

Dimensions (mm)

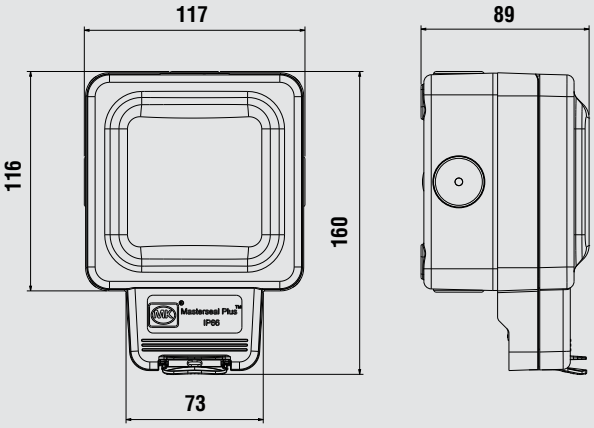

Masterseal Plus™ Technical

13A Connection Units

Standards and approvals

All Masterseal Plus™ Connection Units comply with BS 1363 Part 4:1995. All units are fitted with a 13A fuse link to BS 1362.

TECHNICAL SPECIFICATION

ELECTRICAL

VOLTAGE RATING
250V a.c.

CURRENT RATING
Connection units – 13 amp

TERMINAL CAPACITY
Supply terminal
2 x 6mm² stranded
3 x 4mm²
3 x 2.5mm²
3 x 1.5mm²

LOAD TERMINALS
1 x 1.5mm²

PHYSICAL

AMBIENT OPERATING TEMPERATURE
–5°C to +40°C

IP RATING
IP66

MAX. INSTALLATION ALTITUDE
2000 metres

Impact Resistance

All Masterseal Plus™ products have an impact resistance equivalent to a 500g object falling from a height of 40cm.

Boxes

Rear entry back boxes are supplied for 'tamper proof' surface mounted situations or flush mounting when used with Flush Mounting Bezels (K56502). These boxes must also be used if cable or conduit enters the enclosure from the rear.

Installation

Masterseal Plus connection units can be wall or bench mounted. Do not use on a trailing lead.

Description

Masterseal Plus™ connection units are specifically designed for use outdoors or in areas heavily exposed to dust and/or splashing water. Constructed from extremely robust polycarbonate, the range is sealed to IP66 against dust, water and is impact resistant and will completely protect and provide a safe connection to any appliance.

FEATURES

- IP66 protected to BS EN 60529:1992
- Ideal for gardens, workshops, industry, commercial, public areas, farm buildings, ponds, pools etc
- Easy to install: fixed gasket, captive backed out terminal screws, clearly marked top access angled terminals, push fit knockouts and conduit entries, rear drill holes
- Patented gel seal provides durable water and dust tight seal for improved protection
- Improved catch eases opening and closing during use
- Manufactured from polycarbonate for impact protection
- Screw fitted fuse carrier
- Fuse carrier lockable in open position
- Captive fuse carrier
- 3mm minimum switch contact gap
- Double pole switching
- Moulded 'on' indicator flash on switches will not rub off

Dimensions (mm)

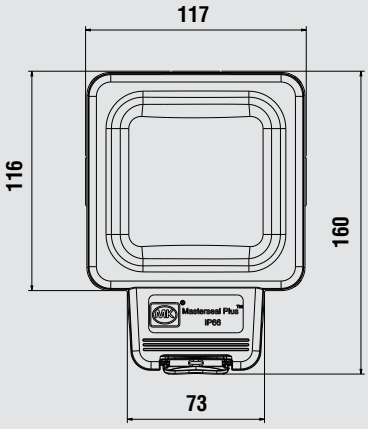

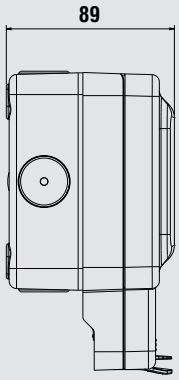

Fixing Dimensions

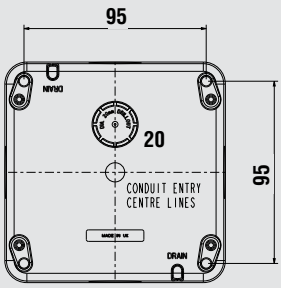

Masterseal Plus™ Technical

Switches

Standards and approvals

Switches and enclosures comply with BS EN 60669-1:1999 and are IP66 for BS EN 60529:1992.

Switch modules comply with BS EN 60669-1:1999.

All products comply with or allow compliance with BS 7671:2008.

TECHNICAL SPECIFICATION

ELECTRICAL

SUPPLY VOLTAGE
250V a.c.

CURRENT RATING
10 or 20 amps – no derating when used on fluorescent or inductive loads.

LOAD TYPE
No resistriction

PHYSICAL

AMBIENT OPERATING TEMPERATURE
0°C to +40°C

IP RATING
IP66 (Grid Plus enclosures are IP56)

MAX. INSTALLATION ALTITUDE
2000 metres

Boxes

Rear entry back boxes are supplied for surface mounted situations or flush mounting when used with Flush Mounting Bezels (56502). These boxes must also be used if cable or conduit enters the enclosure from the rear.

Customer Configurable Grid – K56414

1. Up to two wiring device modules may be selected from the MK Grid Plus modular range and fitted to the configurable grid enclosure.
2. If a TV outlet is to be fitted in combination with a mains voltage device, then it is essential that the cabling and modules are isolated from each other.
3. Grid modules are assembled into the front face of the front plate and clip firmly into position.
4. Two bezel mouldings are supplied. Select the appropriate bezel depending on whether one or two modules are fitted, locate in position and secure with the two screws provided as shown in Figure 1.

Description

A range of switches and enclosures specifically designed for use outdoors or in areas heavily exposed to dust and/or splashing water.

Constructed from extremely robust polycarbonate, the range is sealed to *IP66 against dust, water and is impact resistant. Masterseal Plus™ is easy to install and the large rocker switches and clip in modules make it easy to use, even when wearing heavy gloves.

FEATURES

- IP66 protected to BS EN 60529:1992
- Ideal for gardens, workshops, industry, commercial, public areas, farm buildings, ponds, pools etc
- Easy to install: fixed gasket, captive backed out terminal screws, clearly marked top access angled terminals, push fit knockouts and conduit entries, rear drill holes
- Improved catch eases opening and closing during use
- Manufactured from polycarbonate for impact protection
- Large, easy to use rocker switches
- Wide range of switch modules and accessories make Masterseal Plus™ versatile
- Switch modules snap into position

Dimensions (mm)

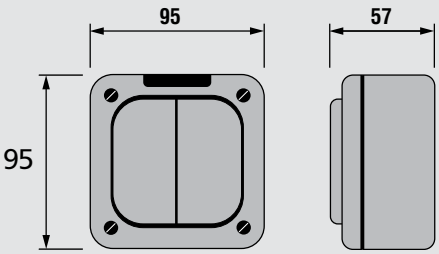

Fixing dimensions

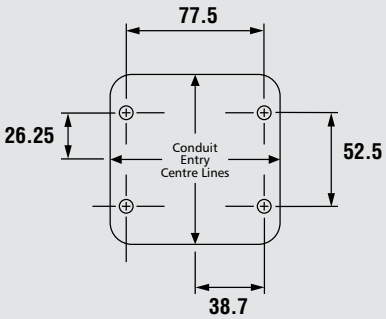

Figure 1

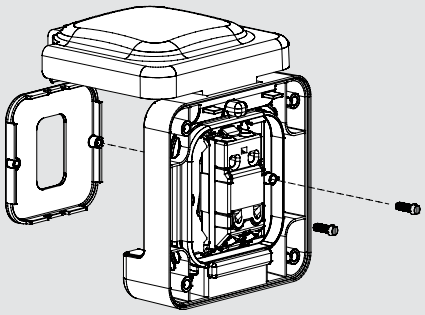

Masterseal Plus™ Technical

Euro Enclosure and Telephone and Data Modules

Standards and approvals

Telephone sockets K5820 and K5821 comply with the following: BS 6312-2.

K5844/K5845/K5845s comply with: ISO/IEC 11801, EN 50173, TIA 568, and EN 41003.

K5887 complies with FCC68 and EN 41003.

TECHNICAL SPECIFICATION
PHYSICAL
AMBIENT OPERATING TEMPERATURE 0°C to +40°C
IP RATING IP66
MAX. INSTALLATION ALTITUDE 2000 metres

Installation (Telephone socket modules)

Product performance, systems compatibility

Master Sockets: For use as the first socket outlet on a direct exchange. They contain the required surge protector (for line protection against electrical surges) and ringing capacitor.

Secondary Sockets: for use as extension sockets when connected on the same line as a Master Socket.

MODULE DIMENSIONS (MM)
25 x 50

For euro module wiring diagrams, please refer to wiring devices technical section, pages 467-475

Description

A range of Euro telephone, data and blank modules and weatherproof enclosure. Enclosure accommodates 2 modules providing care is used to ensure that the cables are correctly routed through the outlet.

FEATURES

- IP66 protected to BS EN 60529:1992
- Ideal for gardens, workshops, industry, commercial, public areas, farm buildings, ponds, pools etc.
- Easy to install: fixed gasket, captive backed out terminal screws, clearly marked top access angled terminals, push fit knockouts and conduit entries, rear drill holes
- Patented gel seal provides durable water and dust tight seal for improved protection
- Improved catch eases opening and closing during use
- Manufactured from polycarbonate for impact protection
- Products are available in grey, white and black

Masterseal Plus™ Technical

Installation

Notes

1. The enclosure is made from polycarbonate which is a highly durable material, and ideal for most environments. However, if installing in areas where creosote, some chemicals, synthetic oils and harsh cleaners are used, seek advice from MK Technical Sales Service Department or refer to the table on page 552.
2. The enclosure must be mounted on a flat, vertical surface that is free from grease, dirt and loose material.
3. If the conduit cable entry is from the top or sides the lower drain hole in the mounting box must be drilled out using a 5mm diameter drill bit. This will allow any condensation formed in the conduit system to drain out of the unit.

   NOTE: opening the drain hole will reduce the IP rating; therefore ensure that jetted water is not directed at the unit.
4. The drain hole should not be drilled out if the enclosure is to be installed in an excessively dusty environment. If the drain hole is not drilled out, only the bottom cable entry must be used.
5. If conduit is used for bottom cable entry, a 5 mm diameter drain hole needs to be drilled in the lowest point of the conduit run.
6. If wiring directly to the enclosure without conduit and the installation is outdoors, ensure that a cable specified for outside use is used.
7. PVC Cable Entry (see Service Items) must only be used at the bottom cable entry of the enclosure.

NOTE: If using box coupler 56464 to join boxes use a suitable sealant to ensure full IP protection is maintained.

Instructions

CAUTION

Do not allow paint or wood preservative to come into contact with the product. The product can be safely mounted on painted surfaces or surfaces treated with wood preservative when the paint or wood preservative is completely dry.

1. Read the safety instructions.
2. Mark the position of the fixing holes for the mounting box.
3. Drill holes and fit wall plugs suitable for a No. 8 wood screw.
4. Prior to fitting the mounting box to the wall, drill out the drain hole if required (see Installation Note 3). File out the complete drain hole profile. Take care not to damage the small internal wall.
5. Carefully remove the cable entry blanks, or drill out the rear cable entry, as required and fit conduit entry (see Service Items).
6. Secure the mounting box to wall with four No. 8 wood screws. Position drain hole at bottom left hand corner.
7. Align and install conduit or cable entry as required.
8. Seal the conduit and conduit entry with a non setting conduit sealant such as EWPLUS. Refer to Figure 4.

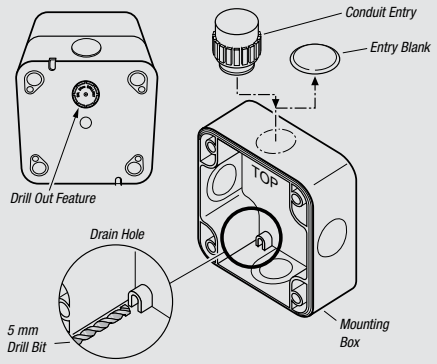

9. For instructions on how to wire the front plate of telephone and data products see the instruction leaflets supplied with the appropriate module.

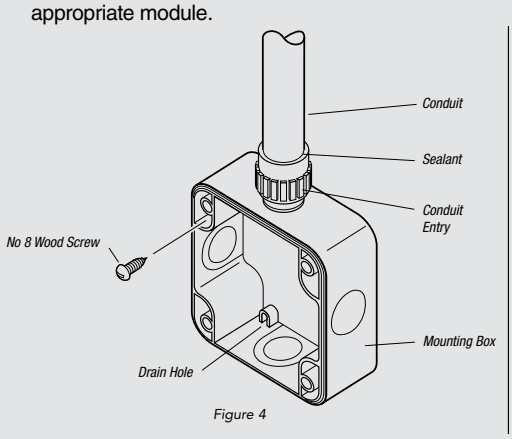

Figure 4

10. Before wiring and fitting the front plate, position the seal on the front plate. Ensure the holes are aligned and seal is aligned with the ribs on the mounting box and the cables are threaded through the seal and screws are fully tightened.

Installation

11. Wire and fit the front plate. Ensure the seal is correctly located and the cables are not trapped or pinched.

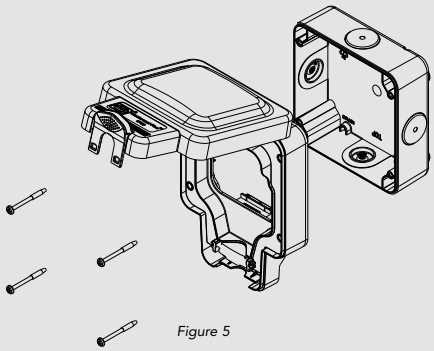

Figure 5

When installing connection units using the front flexible cable clamp

1. Strip back the outer sheath on the appliance flexible LOAD cable and trim wires to 55mm in length. Do not trim the insulation on the three individual cables for the moment.
2. When using cables of 10mm or more in diameter, it is necessary to prestress the cable clamp before attempting to load the cable.
3. To pre-stress the clamp insert a flat bladed screwdriver into the cord grip as shown in fig. 6a and flex the clamping jaw open until it touches the grey base moulding fig. 6b. Then remove the screwdriver.

IMPORTANT: The clamp must not be re-used for cables below 6mm diameter after pre-stressing.

4. Cables below 10mm diameter do not need the cable clamp pre-stressed and the installation from this point is the same for all products.
5. To assist pushing the load cable through the front of the product, ease the clamping jaw pressure by holding the product securely in one hand and pushing the tab firmly with your thumb in the direction shown in fig. 7a.
6. Continue pushing the cable through the clamp until the outer sheath reaches the cable stops. See fig. 7b. The jaws must clamp on the outer sheath.
7. Carefully strip back the insulation on all three cables to expose 10mm of the conductor.
8. Ensure all conductors are connected to the appropriate terminals.

NOTE: Terminal screws must be securely tightened. Pull on each cable to ensure that the terminal screw has securely fixed the conductor.

Pre-stressing the front cable clamp for cables greater than 10mm in diameter

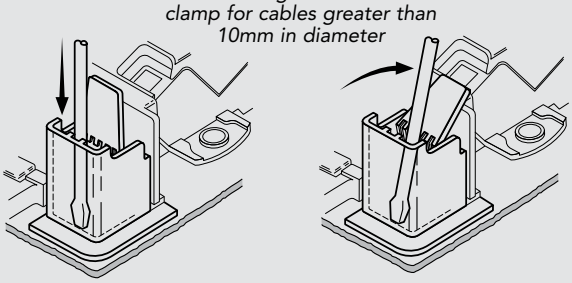

Figure 6a Figure 6b

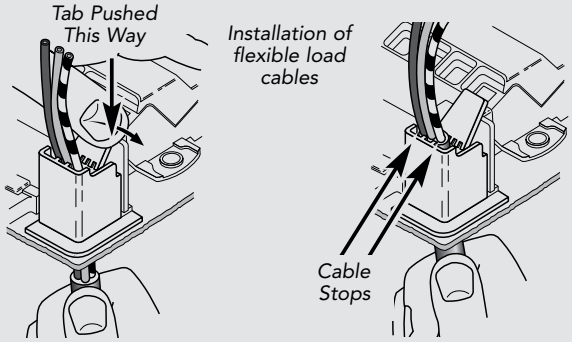

Figure 7a Figure 7b

Testing

Test the completed installation in accordance with the latest edition of the IET wiring regulations (BS 7671).

Service and Maintenance

CLEANING

1. The exterior of the product must only be cleaned with a solution of mild detergent (e.g. washing up liquid) and warm water.

Masterseal Plus™ Technical

Polycarbonate Chemical Resistance Table

REAGENT	CONCENTRATION	RESISTANCE
ACETIC ACID, AQUEOUS	40	■
ACETIC ACID, AQUEOUS	5	▲
ACETONE		■
AMMONIA, AQUEOUS	10	■
BENZENE		■
BEVERAGES, ALCOHOLIC		▲
BITUMEN		Not tested
BLEACHING LYE, AQUEOUS		■
BORIC ACID		▲
BUTANOL		■
BUTTER		●
BUTYRIC ACID		■
CALCIUM CHLORIDE, AQUEOUS	10	▲
CARBON TETRACHLORIDE		■
CHLORINE GAS		●
CHLORINE, AQUEOUS SOLUTION		■
CHLOROFORM		■
CITRIC ACID, AQUEOUS	10	▲
COCONUT OIL		▲
DIESEL FUEL		●
EDIBLE FATS		▲
EDIBLE OILS		▲
ETHANOL	96	▲
ETHYLENE ACETATE		■
ETHYLENE ETHER		■
FORMALDEHYDE, AQUEOUS	30	▲
FORMIC ACID, AQUEOUS	40	●
FREON, LIQUID		▲
FRIGEN, LIQUID		▲
FRUIT JUICES		▲
FUEL OIL (HEATING)		●
GAS LIQUOR		Not tested
GLYCERINE		▲
GLYCOL		▲
GLYSANTINE, AQUEOUS	40	Not tested
HEXANE		▲
HYDROCHLORIC ACID, AQUEOUS	2	■
HYDROFLUORIC ACID, AQUEOUS	40	▲
HYDROGEN PEROXIDE, AQUEOUS	10	▲
INK		▲
IODINE TINCTURE, ALCOHOLIC		■

Key

- ▲ Resistant
- ● Limited resistance
- ■ Not resistant

NOTE: Caution is advised to ensure compatibility of cleaning agents used in the vicinity of Polycarbonate plastics, particularly if frequent cleaning is employed.

Polycarbonate Chemical Resistance Table

REAGENT	CONCENTRATION	RESISTANCE
KEROSENE		■
LATIC ACID, AQUEOUS	10	▲
LAVENDER OIL		Not tested
LINSEED OIL		Not tested
MACHINE OILS		■
MERCURY		▲
METHANOL		■
METHYLENE CHLORIDE		■
MILK		▲
MINERAL OILS		▲
NITRIC ACID, AQUEOUS	2	▲
OLEIC ACID		▲
OZONE		▲
PARAFFIN OIL		▲
PEPPERMINT OIL		Not tested
PERFUMES		■
PETROL (GASOLINE)		●
PHENOL, AQUEOUS		■
PHOSPHORIC ACID, AQUEOUS	10	■
POTASSIUM HYDROXIDE SOLUTION, AQUEOUS	5	■
POTASSIUM HYDROXIDE SOLUTION, AQUEOUS	50	■
ROSE OIL		●
SALT SOLUTION, HOUSEHOLD, AQUEOUS	10	▲
SILICON OILS		▲
SOAP SOLUTION, AQUEOUS		▲
SODA SOLUTION, AQUEOUS	10	▲
SODIUM HYDROXIDE SOLUTION, AQUEOUS	10	■
SODIUM, AQUEOUS	10	Not tested
SULPHUR		▲
SULPHURIC ACID, AQUEOUS	10	▲
TALLOW		▲
TAR		▲
TETRACHLOROETHENE		■
TOLUENE		■
TRICHLORETHANE		■
VASELINE		▲
WATER		▲
WATER, HOT (80OC)		●
WAX, MELTED		Not tested
XYLENE		■

Key

- ▲ Resistant
- ● Limited resistance
- ■ Not resistant

NOTE: Caution is advised to ensure compatibility of cleaning agents used in the vicinity of Polycarbonate plastics, particularly if frequent cleaning is employed.

Commando Safetyswitch Technical

K6725

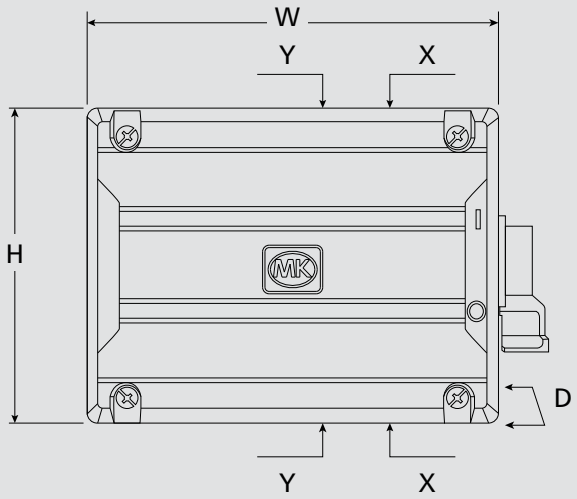

For a full range of corresponding products, see pages 250-253 in the product selector.

K6725																	
LIST NUMBER	ITHE (A)	IE (AC23A)	RATED OPERATIONAL POWER (KW)	TERMINAL CAPACITY (MM²)	NO OF POLES	MAX. NUMBER OF ADDITIONAL AUXILIARY CONTACTS	ADDITIONAL AUXILLARY CONTACT (NO) LIST NUMBER (NOT SUPPLIED)	ADDITIONAL AUXILLARY CONTACT (NC) LIST NUMBER (NOT SUPPLIED)	DEGREE OF INGRESS PROTECTION	ENCLOSURE SIZE (MM)			CABLE ENTRY		FIXING DIMENSIONS (MM)		
										W	H	D	X	Y	A	B	G
K6725	25	20	11	1.5-4	6 (2xL1, 2xL2 & 2xL3)	2	6818	6819	IP65	190	130	65	2 x Ø25	1 x Ø16	124	90	5
K6725YEL	25	20	11	1.5-4	7 (2xL1, 2xL2, 2xL3 & AUX)	2	6818	6819	IP65	190	130	65	2 x Ø25	1 x Ø16	124	90	5

K6816

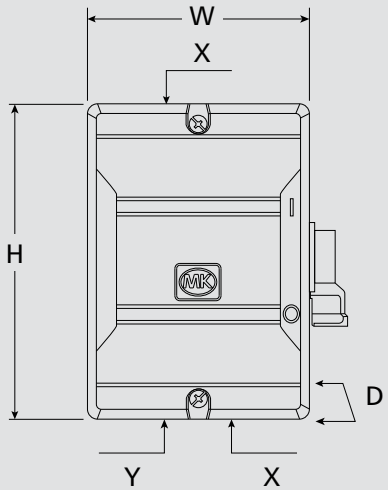

K6816																	
LIST NUMBER	ITHE (A)	IE (AC23A)	RATED OPERATIONAL POWER (KW)	TERMINAL CAPACITY (MM²)	NO OF POLES	MAX. NUMBER OF ADDITIONAL AUXILIARY CONTACTS	ADDITIONAL AUXILLARY CONTACT (NO) LIST NUMBER (NOT SUPPLIED)	ADDITIONAL AUXILLARY CONTACT (NC) LIST NUMBER (NOT SUPPLIED)	DEGREE OF INGRESS PROTECTION	ENCLOSURE SIZE (MM)			CABLE ENTRY		FIXING DIMENSIONS (MM)		
										W	H	D	X	Y	A	B	G
K6816	16	10	7.5	1.5-4	3 (L1, L2, & L3)	1	6818	6819	IP65	111	130	60	2xM25	-	64	90	5
K6816YEL	16	10	7.5	1.5-4	3 (L1, L2, L3 & AUX)	1	6818	6819	IP65	111	130	60	2 x Ø25	-	64	90	5

Commando Safetyswitch Technical

K6825

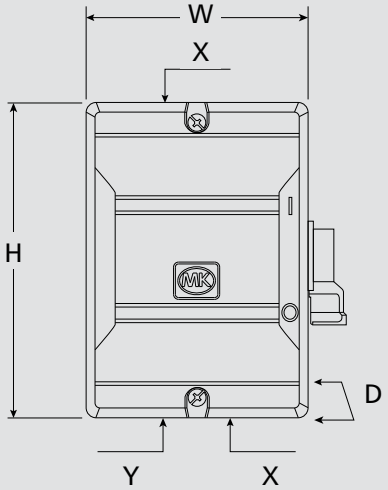

K6825																	
LIST NUMBER	ITHE (A)	IE (AC23A)	RATED OPERATIONAL POWER (KW)	TERMINAL CAPACITY (MM²)	NO OF POLES	MAX. NUMBER OF ADDITIONAL AUXILIARY CONTACTS	ADDITIONAL AUXILLARY CONTACT (NO) LIST NUMBER (NOT SUPPLIED)	ADDITIONAL AUXILLARY CONTACT (NC) LIST NUMBER (NOT SUPPLIED)	DEGREE OF INGRESS PROTECTION	ENCLOSURE SIZE (MM)			CABLE ENTRY		FIXING DIMENSIONS (MM)		
										W	H	D	X	Y	A	B	G
K6825	25	20	11	1.5-4	3 (L1, L2, & L3)	1	6818	6819	IP65	111	130	60	2 x M25	-	64	90	5
K6825YEL	25	20	11	1.5-4	3 (L1, L2, L3 & AUX)	1	6818	6819	IP65	111	130	60	2 x M25	-	64	90	5

K6840

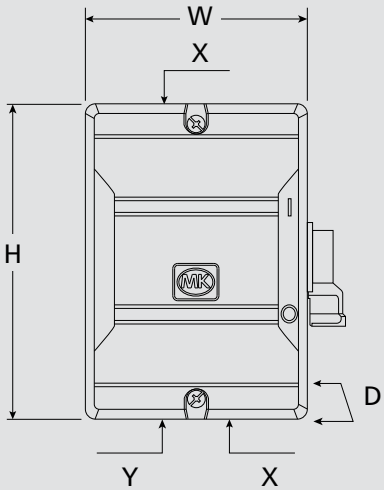

K6840																	
LIST NUMBER	ITHE (A)	IE (AC23A)	RATED OPERATIONAL POWER (KW)	TERMINAL CAPACITY (MM²)	NO OF POLES	MAX. NUMBER OF ADDITIONAL AUXILIARY CONTACTS	ADDITIONAL AUXILLARY CONTACT (NO) LIST NUMBER (NOT SUPPLIED)	ADDITIONAL AUXILLARY CONTACT (NC) LIST NUMBER (NOT SUPPLIED)	DEGREE OF INGRESS PROTECTION	ENCLOSURE SIZE (MM)			CABLE ENTRY		FIXING DIMENSIONS (MM)		
										W	H	D	X	Y	A	B	G
K6840	40	25	11	1.5-10	3 (L1, L2, & L3)	1	6818	6819	IP65	138	165	68	2xM32	2xM16	90	127	5
K6840YEL	40	25	11	1.5-10	3 (L1, L2, L3 & AUX)	1	6818	6819	IP65	138	165	68	2 x M32	2xM16	90	127	5

Commando Technical

Plugs 16 and 32 Amp

IP44 SPLASHPROOF

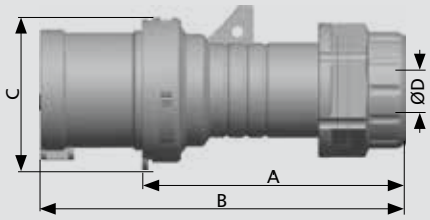

AMPS	PIN. CONFIURATION	100-130V 50-60HZ	200-250V 50-60HZ	380-415V 50-60HZ	CABLE DIAMETER D MM		TERMINAL CAPACITY* MM²	DIMENSIONS IN MM		
		LIST NO	LIST NO	LIST NO	MIN	MAX		A	B	C
16A	2P+E	K9000YEL	K9001BLU 6		8.2	13	1-2.5	132.3	95.5	55.5
16A	3P+E		K9006BLU 6	K9007RED 6	8.9	15.5	1-2.5	132.3	95.5	61.5
16A	3P+N+E		K9014BLU 9	K9015RED 6	10.1	17	1-2.5	132.3	95.5	67.5
32A	2P+E	K9032YEL 4	K9033BLU 6		11.7	18	2.5-6	135.8	90	72.5
32A	3P+E		K9036BLU	K9037RED 6	11.7	22	2.5-6	135.8	90	72.5
32A	3P+N+E		K9044BLU 9	K9045RED 6	14.2	22	2.5-6	141.8	95.8	79.7

Earth Hour Position — *Flexible conductors

Plugs 63 Amp

IP44 SPLASHPROOF

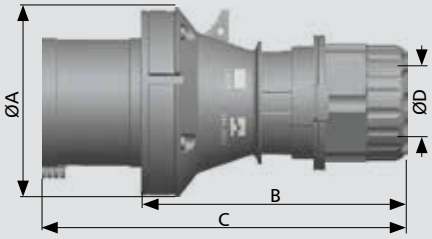

AMPS	PIN. CONFIURATION	100-130V 50-60HZ	200-250V 50-60HZ	380-415V 50-60HZ	CABLE DIAMETER D MM		TERMINAL CAPACITY* MM²	DIMENSIONS IN MM			
		LIST NO	LIST NO	LIST NO	MIN	MAX		A	B	C	D
63A	2P+E	K9063BLU 6			16.5	36	6-16	102	180.8	247.3	36.4
63A	3P+E		K9066RED 6		16.5	36	6-16	102	180.8	247.3	36.4
63A	3P+N+E			K9071RED 6	16.5	36	6-16	102	180.8	247.3	36.4

Earth Hour Position — *Flexible conductors

Plugs 16 and 32 Amp

IP67 WATERTIGHT

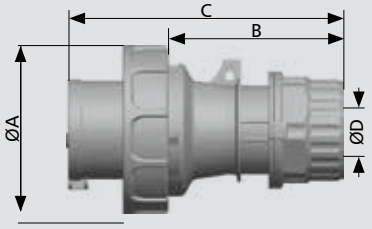

AMPS	PIN. CONFIURATION	100-130V 50-60HZ	200-250V 50-60HZ	380-415V 50-60HZ	CABLE DIAMETER D MM		TERMINAL CAPACITY* MM²	DIMENSIONS IN MM		
		LIST NO	LIST NO	LIST NO	MIN	MAX		A	B	C
16A	2P+E	K9023YEL 4	K9024BLU 6		8.2	13	1-2.5	72	81.2	117.6
16A	3P+E			K9025RED 6	8.9	17	1-2.5	75.4	87.2	123.6
16A	3P+N+E			K9026RED 6	10.1	17	1-2.5	88	93.6	129.6
32A	2P+E		K9054BLU 6		11.7	18	2.5-6	92	97.2	142.6
32A	3P+E									
32A	3P+N+E			K9056RED 6	14.2	22	2.5-6	98	102.9	148.3

Earth Hour Position — *Flexible conductors

Commando Technical

Plugs 63 Amp

IP67 WATERTIGHT

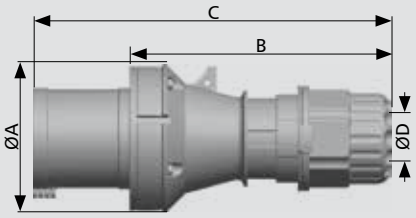

AMPS	PIN. CONFIURATION	100-130V 50-60HZ	200-250V 50-60HZ	380-415V 50-60HZ	CABLE DIAMETER D MM		TERMINAL CAPACITY* MM²	DIMENSIONS IN MM		
		LIST NO	LIST NO	LIST NO	MIN	MAX		A	B	C
63A	2P+E	K9063BLU 6			16.5	36	6-16	102	180.8	247.3
63A	3P+E		K9066RED 6		16.5	36	6-16	102	180.8	247.3
63A	3P+N+E		K9292RED 6	K9071RED 6	16.5	36	6-16	102	180.8	247.3
Earth Hour Position							*Flexible conductors			

Connectors 16, 32 and 63 Amp

IP44 SPLASHPROOF

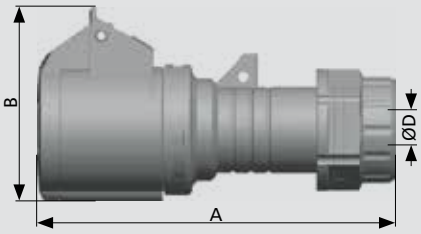

AMPS	PIN. CONFIURATION	100-130V 50-60HZ	200-250V 50-60HZ	380-415V 50-60HZ	CABLE DIAMETER D MM		TERMINAL CAPACITY* MM²	DIMENSIONS IN MM	
		LIST NO	LIST NO	LIST NO	MIN	MAX		A	B
16A	2P+E	K9100YEL 4	K9101BLU 6		8.2	13	1-2.5	142	77.3
16A	3P+E			K9107RED 6	8.9	15.5	1-2.5	142	80.8
16A	3P+N+E			K9115RED 6	10.1	17	1-2.5	142	90
32A	2P+E	K9132YEL 4	K9133BLU 6		11.7	18	2.5-6	148	92
32A	3P+N+E		K9143BLU 9	K9144RED 6	11.1	22	2.5-6	154	98.5
63A	3P+N+E			K9170RED 6	16.5	36	6-16	109.5	256
Earth Hour Position							*Flexible conductors		

Connectors 63 Amp

IP44 SPLASHPROOF

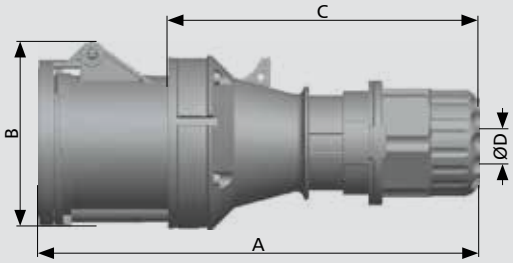

AMPS	PIN.CONFIURATION	200-250V 50-60HZ	380-415V 50-60HZ	CABLE DIAMETER D MM		TERMINAL CAPACITY* MM²	DIMENSIONS IN MM		
		LIST NO	LIST NO	MIN	MAX		A	B	C
63A	2P+E	K9172BLU 6		16.5	36	6-16	109.5	256	36.4
63A	3P+E								
63A	3P+N+E		K9170RED 6	16.5	36	6-16	109.5	256	36.4
Earth Hour Position						*Flexible conductors			

For a full range of corresponding products, see pages 254-263 in the product selector.

Commando Technical

Connectors 16 and 32 Amp

IP67 WATERTIGHT

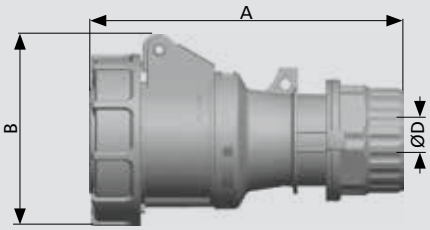

AMPS	PIN. CONFIGURATION	100-130V 50-60HZ	200-250V 50-60HZ	380-415V 50-60HZ	CABLE DIAMETER D MM		TERMINAL CAPACITY* MM²	DIMENSIONS IN MM	
		LIST NO	LIST NO	LIST NO	MIN	MAX		A	B
16A	2P+E	K9123YEL 4	K9124BLU 6		8.2	13	1-2.5	151	80
16A	3P+E			K9125RED 6	8.9	17	1-2.5	168	88
16A	3P+N+E			K9126RED 6	10.1	21.5	1-2.5	170	97
32A	2P+E	K9155YEL 4	K9156BLU 6		11.7	21.5	2.5-6	177	102
32A	3P+E			K9157RED 6	11.7	21.5	2.5-6	177	102
32A	3P+N+E			K9158RED 6	14.2	21.5	2.5-6	182	109
Earth Hour Position							*Flexible conductors		

Connectors 63 Amp

IP67 WATERTIGHT

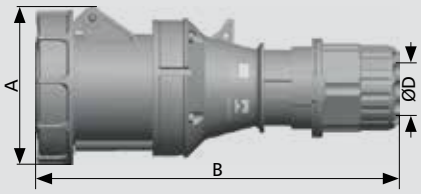

AMPS	PIN. CONFIGURATION	100-130V 50-60HZ	200-250V 50-60HZ	380-415V 50-60HZ	CABLE DIAMETER D MM		TERMINAL CAPACITY* MM²	DIMENSIONS IN MM	
		LIST NO	LIST NO	LIST NO	MIN	MAX		A	B
63A	2P+E	K9855YEL 4	K9856BLU 6		14	41	4 - 16	286	111
63A	3P+E			K9842RED 6	16.5	41	4 - 16	286	111
63A	3P+N+E			K9852RED 6	16.5	41	4 - 16	286	111
Earth Hour Position							*Flexible conductors		

Socket Outlets Angled Surface Mounting 16 and 32 Amp

FITTED WITH CABLE ENTRY GLAND THREAD SIZE M48

IP44 SPLASHPROOF

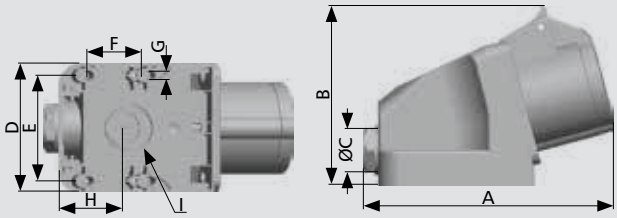

AMPS	PIN. CONFIURATION	100-130V 50-60HZ	200-250V 50-60HZ	380-415V 50-60HZ	CABLE DIAMETER D MM		TERMINAL CAPACITY* MM²	DIMENSIONS IN MM								
		LIST NO	LIST NO	LIST NO	MIN	MAX		A	B	C	D	E	F	G	H	I
16A	2P+E	K9200YEL 4	K9201BLU 6		8.2	13	1-2.5	138.7	99	20	71	58	34	5	35	Ø19/26
16A	3P+E		K9206BLU 9	K9207RED 6	8.9	15.5	1-2.5	138.7	101	20	71	58	34	5	35	Ø19/26
16A	3P+N+E		K9214BLU 9	K9215RED 6	10.1	17	1-2.5	139.7	105	20	71	58	34	5	35	Ø19/26
32A	2P+E	K9232YEL 4	K9233BLU 6		11.7	18	2.5-6	150.6	107	25	71	58	34	5	35	Ø19/26
32A	3P+E		K9236BLU 9	K9237RED 6	11.7	22	2.5-6	150.6	107	25	71	58	34	5	35	Ø19/26
32A	3P+N+E		K9240BLU 9	K9241RED 6	11.1	22	2.5-6	151.6	110	25	71	58	34	5	35	Ø19/26
Earth Hour Position							*Solid or Stranded conductors									

Socket Outlets Angled Surface Mounting 63 Amp

TOP CONDUIT OR REAR CABLE ENTRY, COMPLETE WITH BLANKING PLUG

IP44 SPLASHPROOF

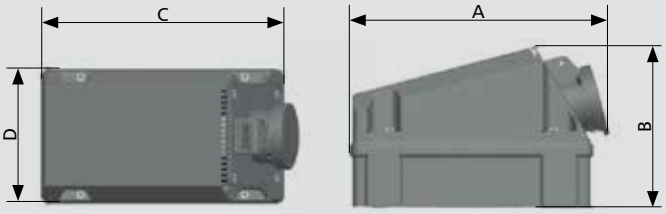

AMPS	PIN. CONFIURATION	200-250V 50-60HZ	380-415V 50-60HZ	TERMINAL CAPACITY* MM²	DIMENSIONS IN MM			
		LIST NO	LIST NO		A	B	C	D
63A	2P+E	K9274BLU		6-16	300.8	165.4	274.5	135
63A	3P+N+E		K9269RED	6-16	300.8	166.1	275	135
Earth Hour Position				*Flexible conductors				

Commando Technical

Socket Outlets Angled Surface Mounting 63 Amp

IP67 WATERTIGHT

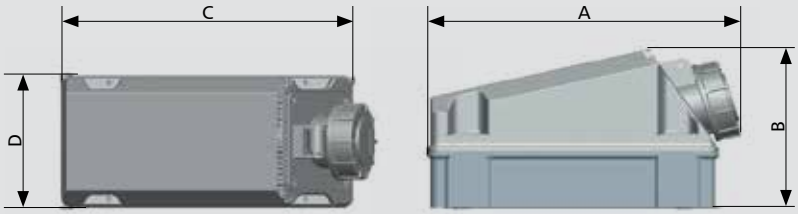

AMPS	PIN. CONFIURATION	200-250V 50-60HZ	380-415V 50-60HZ	TERMINAL CAPACITY* MM²	DIMENSIONS IN MM			
		LIST NO	LIST NO		A	B	C	D
63A	2P+E	K9857BLU		6-16	300.8	165.4	274.5	135
63A	3P+E		K9858RED		300.8	166.1	275	135
63A	3P+N+E		K9859RED	6-16	300.8	166.1	275	135
Earth Hour Position				*Flexible conductors				

Socket Outlets Straight Panel Mounting 16 and 32 Amp

ALL FLANGES HAVE THE SAME FIXING CENTRES AND OUTSIDE DIMENSIONS TO ASSIST PANEL BUILDING.

IP44 SPLASHPROOF

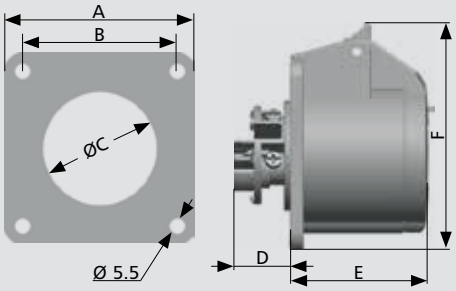

AMPS	PIN. CONFIURATION	100-130V 50-60HZ	200-250V 50-60HZ	380-415V 50-60HZ	CABLE DIAMETER D MM		TERMINAL CAPACITY* MM²	DIMENSIONS IN MM					
		LIST NO	LIST NO	LIST NO	MIN	MAX		A	B	C	D	E	F
16A	2P+E	K9400YEL 4	K9401BLU 6		8.2	13	1-2.5	70	56	41	20.9	50	83
32A	2P+E	K9432YEL 4	K9433BLU 6		11.7	18	2.5-6	70	56	55	26.5	60.4	92
32A	3P+N+E			K9445RED 6	11.1	22	2.5-6	70	56	55	26.5	60.4	98.5
Earth Hour Position							*Solid or Stranded conductors						

Socket Outlets
Angled Panel Mounting
16 and 32 Amp

IP67 WATERTIGHT

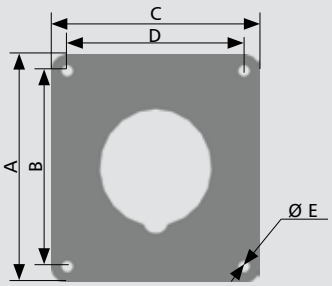

AMPS	PIN. CONFIURATION	100-130V 50-60HZ	200-250V 50-60HZ	380-415V 50-60HZ	CABLE DIAMETER D MM		TERMINAL CAPACITY* MM²	DIMENSIONS IN MM						
		LIST NO	LIST NO	LIST NO	MIN	MAX		A	B	C	D	E	F	G
16A	2P+E	K9802YEL 4					1-2.5	100	85	92	77	5	33.6	46.8
Earth Hour Position							*Solid or Stranded conductors							

Socket Outlets
Angled Panel Mounting
16 and 32 Amp

IP44 SPLASHPROOF

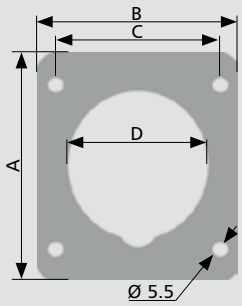

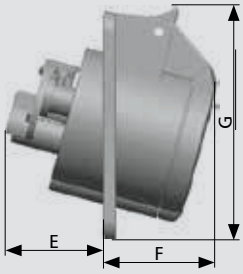

AMPS	PIN. CONFIURATION	100-130V 50-60HZ	200-250V 50-60HZ	380-415V 50-60HZ	CABLE DIAMETER D MM		TERMINAL CAPACITY* MM²	DIMENSIONS IN MM						
		LIST NO	LIST NO	LIST NO	MIN	MAX		A	B	C	D	E	F	G
16A	2P+E		K9771BLU 6		8.2	13	1-2.5	84	74	60	51.2	36	41	85.6
Earth Hour Position							*Solid or Stranded conductors							

Commando Technical

Switchsocket Outlets Interlocked Angled Surface Mounting 16, 32 and 63 Amp

SWITCH CAN BE LOCKED IN OPEN OR CLOSED POSITION

IP44 SPLASHPROOF

16 amp and 32 amp
Will accept auxiliary contact eg. 6813 and 6814
M32/M25 conduit entry, with mounting for FL9 flange plate
63 amp
M40 conduit entry with mounting for FL 13 flange plate
Switch Utilisation Category AC 22A

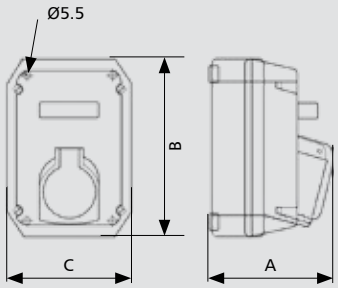

AMPS	PIN. CONFIGURATION	200-250V 50-60HZ	380-415V 50-60HZ	TERMINAL CAPACITY* MM²	DIMENSIONS IN MM			FIXING CENTRES
		LIST NO	LIST NO		A	B	C	
16	3P+E	K9601BLU 9		1.5-10	125	198	135	91.5 x 165
16	3P+N+E	K9607BLU 9		1.5-10	125	198	135	91.5 x 165
32	3P+E			1.5-10	135	198	135	91.5 x 165
32	3P+N+E	K9639BLU 9		1.5-10	135	198	135	91.5 x 165
63	3P+E		K9665RED 6	6-25	183	228	165	91.5 x 201
63	3P+N+E			6-25	183	228	165	91.5 x 201
Earth Hour Position				*Solid or Stranded conductors				

Switchsocket Outlets Interlocked Angled Conduit Entry Surface Mounting 63 Amp

IP44 SPLASHPROOF

16 amp and 32 amp
With 29mm knockout at top.
Will accept FL13 flange.
Bottom entry M25.
63 amp
FL13 flange entry at top.
Supplied with cover plate and gland plate.
Switch Utilisation Category AC 22A

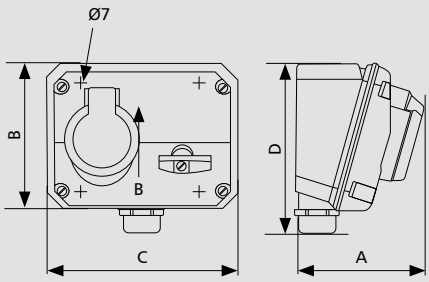

AMPS	PIN. CONFIG-URATION	100-130V 50-60HZ	200-250V 50-60HZ	380-415V 50-60HZ	TERMINAL CAPACITY* MM²	DIMENSIONS IN MM			FIXING CENTRES	CONDUIT ENTRY
		LIST NO	LIST NO	LIST NO		A	B	C		
63	2P+E		K9306BLU 6		6-25	168	168	206	152 x 132	2 x 32mm
Earth Hour Position					*Solid or Stranded conductors					

Switchsocket Outlets
Interlocked Angled Surface Mounting
63 Amp

IP67 WATERTIGHT

63 amp
With 32mm knockouts top and bottom.
Will accept FL13 flange top and bottom.
Switch can be locked in open position or closed position.
Switch Utilisation Category AC 22A

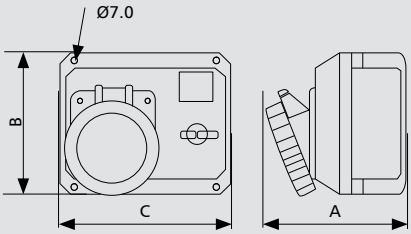

AMPS	PIN. CONFIG-URATION	100-130V 50-60HZ	200-250V 50-60HZ	380-415V 50-60HZ	TERMINAL CAPACITY* MM²	DIMENSIONS IN MM			FIXING CENTRES	CONDUIT ENTRY
		LIST NO	LIST NO	LIST NO		A	B	C		
63A	3P+E			K9342RED 6	6-25	182	168	206	152 x 132	2 x 32mm
Earth Hour Position					*Solid or Stranded conductors					

Splashproof Appliance Inlets
Angled Surface Mounting
16 and 32 Amp

TOP CONDUIT OR REAR CABLE ENTRY, COMPLETE WITH BLANKING PLUG

IP44 SPLASHPROOF

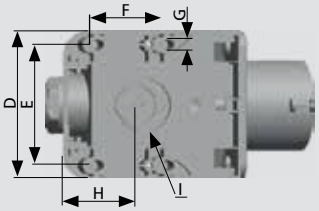

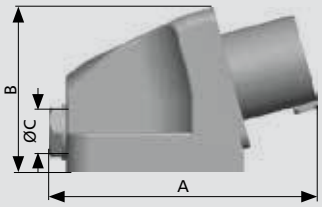

AMPS	PIN. CONFIG-URATION	100-130V 50-60HZ	200-250V 50-60HZ	380-415V 50-60HZ	CABLE DIAMETER		TERMINAL CAPACITY* MM²	DIMENSIONS IN MM							TOP CONDUIT ENTRY D	REAR ENTRY G
		LIST NO	LIST NO	LIST NO	MIN	MAX		B	C	C1	E1	F	H	I		
16A	2P+E		K9701BLU 6		8.2	14	1.5-10	66	75	54	72	5.5	110	30	M20	Ø23
32A	2P+E		K9733BLU 6		11.7	19.5	1.5-10	85	111	72	94	5.5	153	33	M25	Ø29
Earth Hour Position							*Solid or Stranded conductors									

Commando Technical

Socket Outlets
Loop in Surface Mounting
16 and 32 Amp

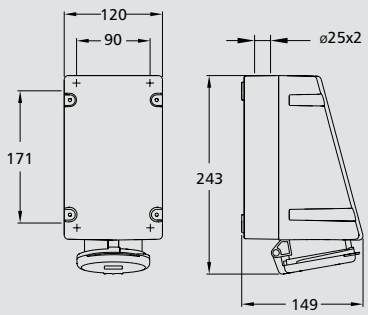

IP44 SPLASHPROOF

AMPS	PIN. CONFIGURATION	100-130V 50-60HZ	200-250V 50-60HZ	380-415V 50-60HZ	CABLE ENTRY KNOCKOUTS	TERMINAL CAPACITY* MM²	FIXING CENTRES MM
		LIST NO	LIST NO	LIST NO			
32A	2P+E	K13232YEL 4			2 x Ø25 top	2 x (2.5-10)	90 x 170
Earth Hour Position						*Solid or Stranded conductors	

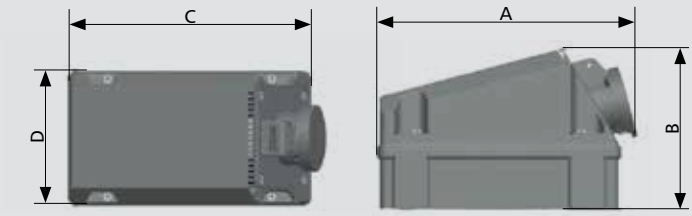

AMPS	PIN. CONFIGURATION	100-130V 50-60HZ	200-250V 50-60HZ	380-415V 50-60HZ	TERMINAL CAPACITY* MM²	DIMENSIONS IN MM			
		LIST NO	LIST NO	LIST NO		A	B	C	D
16A	2P+E	K13300YEL	K13301BLU		1-2.5	227.7	143.5	215	120
32A	2P+E		K13333BLU		2.5-6	235.5	143.5	215	120
32A	3P+N+E			K13341RED	2.5-6	235.5	143.5	215	120
Earth Hour Position					*Solid or Stranded conductors				

Switchsocket Outlets Interlocked Surface Mounting 16 and 32 Amp

(SUITABLE FOR TOP ENTRY)

IP44 SPLASHPROOF

Switch Utilisation Category AC 22A
Will accept auxiliary contacts **6813** and **6814**
Switch can be locked in open or closed position.

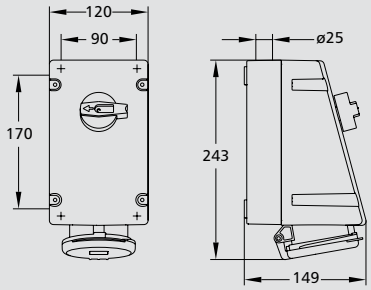

AMPS	PIN. CONFIGURATION	100-130V 50-60HZ	200-250V 50-60HZ	380-415V 50-60HZ	CABLE ENTRY KNOCKOUTS	TERMINAL CAPACITY* MM²	FIXING CENTRES MM
		LIST NO	LIST NO	LIST NO			
16A	3P+E			K13607RED 6	2 x Ø25 top	1.5-4	90 x 170
32A	2P+E	K13632YEL 4			2 x Ø25 top	2.5-10	90 x 170
32A	3P+E			K13637RED 6	2 x Ø25 top	2.5-10	90 x 170
Earth Hour Position						*Solid or Stranded conductors	

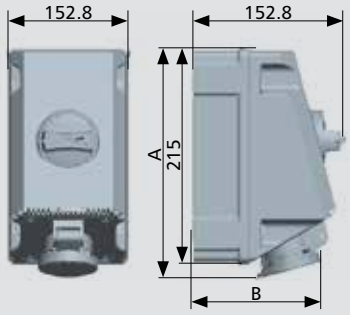

AMPS	PIN. CONFIG-URATION	100-130V 50-60HZ	200-250V 50-60HZ	380-415V 50-60HZ	120/208-144/250V 50-60HZ	200/346-240/415V 50-60HZ	DIMENSIONS IN MM		TERMINAL CAPACITY* MM²	CABLE ENTRY KNOCKOUTS	FIXING CENTRES
		LIST NO	LIST NO	LIST NO	LIST NO	LIST NO	A	B			
16A	2P+E	K73600YEL 4	K73601BLU 6				228	128.5	1.5-4	Ø20/25+Ø25/32 top and bottom	108×165
16A	3P+N+E				K73603BLU 9	K73615RED 6	229	142.5	1.5-4	Ø20/25+Ø25/32 top and bottom	108×165
32A	2P+E		K73633BLU 6				235.5	148	2.5-10	Ø20/25+Ø25/32 top and bottom	108×165
32A	3P+E			K73637RED 6			235.5	148	2.5-10	Ø20/25+Ø25/32 top and bottom	108×165
32A	3P+N+E				K73635BLU 9	K73641RED 6	235.5	154.5	2.5-10	Ø20/25+Ø25/32 top and bottom	108×165
Earth Hour Position									*Solid or Stranded conductors		

Switchsocket Outlets Interlocked Surface Mounting 63 Amp

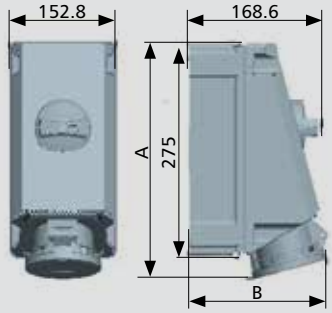

AMPS	PIN. CONFIG-URATION	100-130V 50-60HZ	200-250V 50-60HZ	380-415V 50-60HZ	120/208-144/250V 50-60HZ	200/346-240/415V 50-60HZ	DIMENSIONS IN MM		TERMINAL CAPACITY* MM²	CABLE ENTRY KNOCKOUTS	FIXING CENTRES
		LIST NO	LIST NO	LIST NO	LIST NO	LIST NO	A	B			
63A	3P+N+E					K73643RED 6	301	175	6-25	2×Ø32/40 top and bottom	123×225
Earth Hour Position									*Solid or Stranded conductors		

Commando Technical

Switchsocket Outlets Interlocked Surface Mounting 16 and 32 Amp

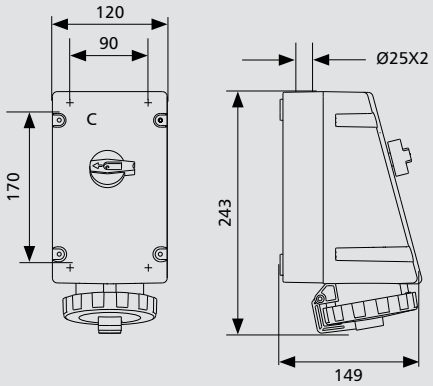

Switch Utilisation Category AC 22A
Will accept auxiliary contacts **6813** and **6814**
Switch can be locked in open or closed position.

IP67 WATERTIGHT

AMPS	PIN. CONFIGURATION	100-130V 50-60HZ	200-250V 50-60HZ	380-415V 50-60HZ	CABLE ENTRY KNOCKOUTS	TERMINAL CAPACITY* MM²	FIXING CENTRES MM
		LIST NO	LIST NO	LIST NO			
16A	3P+E			K13625RED 6	2 x Ø25 top	1.5-4	90 x 170
32A	2P+E	K13653YEL 4			2 x Ø25 top	2.5-10	90 x 170
32A	3P+E			K13655RED 6	2 x Ø25 top	2.5-10	90 x 170
Earth Hour Position						*Solid or Stranded conductors	

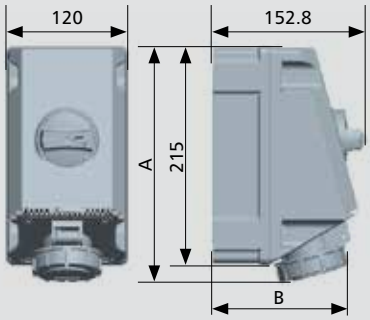

AMPS	PIN. CONFIGURATION	100-130V 50-60HZ	200-250V 50-60HZ	200/346-240/415V 50-60HZ	DIMENSIONS IN MM		TERMINAL CAPACITY* MM²	CABLE ENTRY KNOCKOUTS	FIXING CENTRES
		LIST NO	LIST NO	LIST NO	A	B			
16A	2P+E	K73623YEL 4	K73624BLU 6		233	135	1.5-4	Ø20/25+Ø25/32 top and bottom	108×165
16A	3P+N+E			K73626RED 6	233	147	1.5-4	Ø20/25+Ø25/32 top and bottom	108×165
32A	2P+E		K73654BLU 6		241	153	2.5-10	Ø20/25+Ø25/32 top and bottom	108×165
32A	3P+N+E			K73656RED 6	241	159	2.5-10	Ø20/25+Ø25/32 top and bottom	108×165
Earth Hour Position							*Solid or Stranded conductors		

Switchsocket Outlets Interlocked Surface Mounting 63 Amp

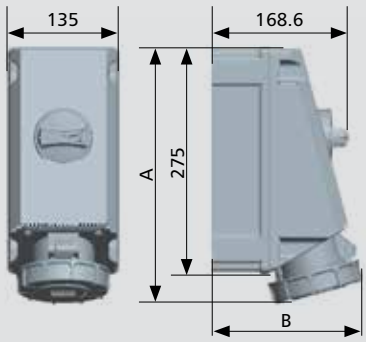

AMPS	PIN. CONFIGURATION	200-250V 50-60HZ	200/346-240/415V 50-60HZ	DIMENSIONS IN MM		TERMINAL CAPACITY* MM²	CABLE ENTRY KNOCKOUTS	FIXING CENTRES
		LIST NO	LIST NO	A	B			
63A	2P+E	K73660BLU 6		312	185	6-25	2×Ø32/40 top and bottom	123×225
63A	3P+N+E		K73658RED 6	312	185	6-25	2×Ø32/40 top and bottom	123×225
Earth Hour Position						*Solid or Stranded conductors		

Socket Outlets
Surface Mounting
16 and 32 Amp Loop In Versions

(SEE DIMENSIONS B)

Fitted with terminals for Loop In

IP67 WATERTIGHT

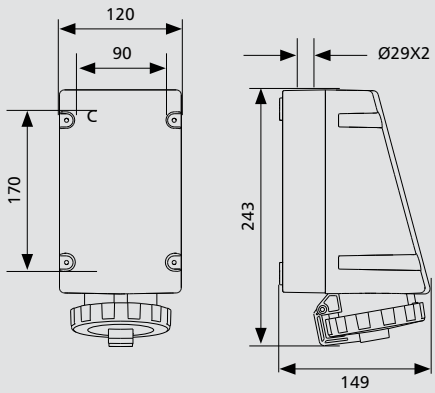

Dimensions B

AMPS	PIN. CONFIGURATION	100-130V 50-60HZ	200-250V 50-60HZ	380-415V 50-60HZ	TERMINAL CAPACITY* MM²	CABLE ENTRY KNOCKOUTS	FIXING CENTRES MM
		LIST NO	LIST NO	LIST NO			
32	2P+E	K13053YEL 4			2 x (2.5-10)	2 x Ø25 top	90 x 170
Earth Hour Position					*Solid or Stranded conductors		

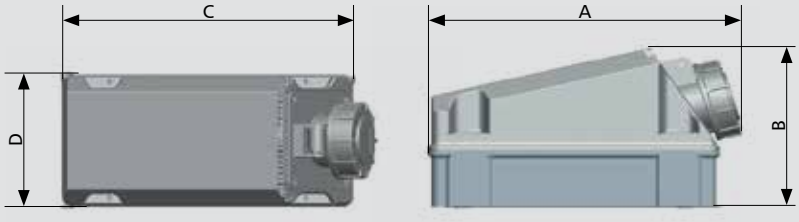

AMPS	PIN. CONFIGURATION	100-130V 50-60HZ	200-250V 50-60HZ	TERMINAL CAPACITY* MM²	DIMENSIONS IN MM			
		LIST NO	LIST NO		A	B	C	D
16A	2P+E	K13323YEL	K13324BLU	1-2.5	232.5	143.5	215	120
32A	2P+E		K13354BLU	2.5-6	240.8	143.5	215	120
Earth Hour Position				*Solid or Stranded conductors				

Commando Combi™ Technical

Socket Outlets
Single Pre-wired with 30mA RCD
16 and 32 Amp

IP44 SPLASHPROOF

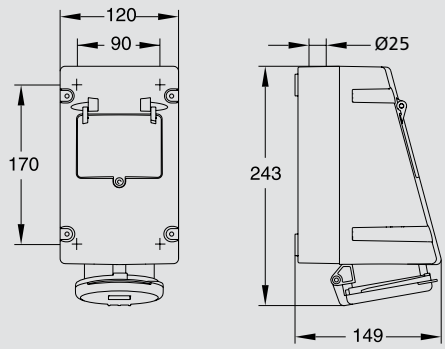

AMPS	PIN. CONFIGURATION	100-130V 50-60HZ	200-250V 50-60HZ	200/346-240/415V 50-60HZ	RCD TERMINAL CAPACITY* MM²		EARTH TERMINAL CAPACITY* MM²		CABLE ENTRY KNOCKOUTS
		LIST NO	LIST NO	LIST NO	MIN	MAX	MIN	MAX	
16A	2P+E	K13413YEL 4			1.5	35	2.5	25	2 x Ø25 top
16A	3P+E			K13415RED 6	1.5	35	2.5	25	2 x Ø25 top
16A	3P+N+E			K13416RED 6	1.5	35	2.5	25	2 x Ø25 top
32A	3P+E			K13434RED 6	2.5	35	2.5	25	2 x Ø25 top

Earth Hour Position

*Solid or Stranded conductors

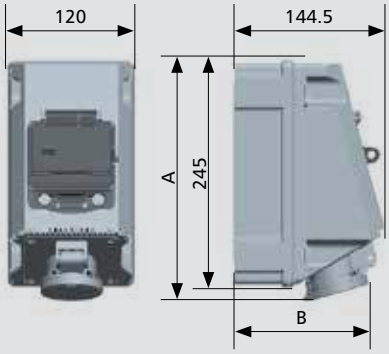

AMPS	PIN. CONFIGURATION	100-130V 50-60HZ	200-250V 50-60HZ	380-415V 50-60HZ	200/346-240/415V 50-60HZ	DIMENSIONS IN MM		TERMINAL CAPACITY* MM²	CABLE ENTRY KNOCKOUTS	FIXING CENTRES
		LIST NO	LIST NO	LIST NO	LIST NO	A	B			
16A	2P+E	K73413YEL 4	K73414BLU 6			228	128.5	1.5-10	Ø20/25+Ø25/32 top and bottom	108×165
16A	3P+E			K73415RED 6		228	135.5	1.5-10	Ø20/25+Ø25/32 top and bottom	108×165
16A	3P+N+E				K73416RED 6	229	142.5	1.5-10	Ø20/25+Ø25/32 top and bottom	108×165
32A	2P+E		K73433BLU 6			235.5	148	1.5-10	Ø20/25+Ø25/32 top and bottom	108×165
32A	3P+E			K73434RED 6		235.5	148	1.5-10	Ø20/25+Ø25/32 top and bottom	108×165
32A	3P+N+E				K73435RED 6	235.5	154.5	1.5-10	Ø20/25+Ø25/32 top and bottom	108×165

Earth Hour Position

*Solid or Stranded conductors

Commando Combi™ Technical

Switchsocket Outlets
Interlocked Pre-wired with 30mA RCD
16 and 32 Amp

IP44 SPLASHPROOF

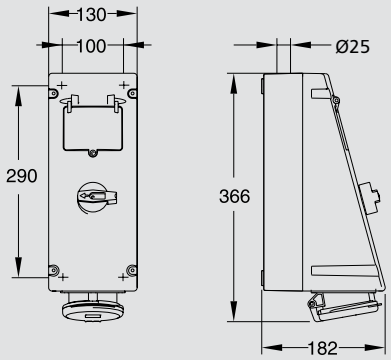

AMPS	PIN. CONFIGURATION	100-130V 50-60HZ	200-250V 50-60HZ	200/346-240/415V 50-60HZ	RCD TERMINAL CAPACITY* MM²		EARTH TERMINAL CAPACITY* MM²		CABLE ENTRY KNOCKOUTS
		LIST NO	LIST NO	LIST NO	MIN	MAX	MIN	MAX	
16A	2P+E	K13309YEL 4			1.5	35	2.5	25	2 x Ø25 top
16A	3P+E			K13311RED 6	1.5	35	2.5	25	2 x Ø25 top
16A	3P+N+E			K13312RED 6	1.5	35	2.5	25	2 x Ø25 top
32A	2P+E	K13342YEL 4	K13343BLU 6		2.5	35	2.5	25	2 x Ø25 top
32A	3P+E			K13344RED 6	2.5	35	2.5	25	2 x Ø25 top
32A	3P+N+E			K13345RED 6	2.5	35	2.5	25	2 x Ø25 top

Earth Hour Position

*Solid or Stranded conductors

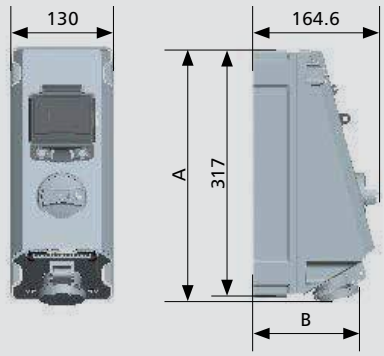

AMPS	PIN. CONFIGURATION	100-130V 50-60HZ	200-250V 50-60HZ	380-415V 50-60HZ	200/346-240/415V 50-60HZ	DIMENSIONS IN MM		TERMINAL CAPACITY* MM²	CABLE ENTRY KNOCKOUTS	FIXING CENTRES
		LIST NO	LIST NO	LIST NO	LIST NO	A	B			
16A	2P+E	K73309YEL 4	K73310BLU 6			325	136.5	1.5-10	Ø20/25+Ø25/32 top and bottom	118×261
16A	3P+E			K73311RED 6		325	143.5	1.5-10	Ø20/25+Ø25/32 top and bottom	118×261
16A	3P+N+E				K73312RED 6	326	150.5	1.5-10	Ø20/25+Ø25/32 top and bottom	118×261
32A	2P+E	K73342YEL 4	K73343BLU 6			333	156	1.5-10	Ø20/25+Ø25/32 top and bottom	118×261
32A	3P+E			K73344RED 6		333	156	1.5-10	Ø20/25+Ø25/32 top and bottom	118×261
32A	3P+N+E				K73345RED 6	333	162	1.5-10	Ø20/25+Ø25/32 top and bottom	118×261

Earth Hour Position

*Solid or Stranded conductors

For a full range of corresponding products, see pages 264-267 in the product selector.

Commando Combi™ Technical

Switchsocket Outlets
Interlocked Pre-wired with 30mA RCD
16 and 32 Amp

IP67 WATERTIGHT

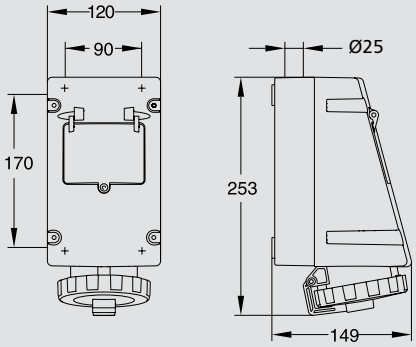

AMPS	PIN. CONFIGURATION	100-130V 50-60HZ	200-250V 50-60HZ	200/346-240/415V 50-60HZ	RCD TERMINAL CAPACITY* MM²		EARTH TERMINAL CAPACITY* MM²		CABLE ENTRY KNOCKOUTS
		LIST NO	LIST NO	LIST NO	MIN	MAX	MIN	MAX	
16	2P+E	K13713YEL 6			1.5	35	2.5	25	2 x Ø25 top
16	3P+E			K13715RED 6	1.5	35	2.5	25	2 x Ø25 top
16	3P+N+E			K13716RED 6	1.5	35	2.5	25	2 x Ø25 top
32	2P+E		K13733BLU 6		2.5	35	2.5	25	2 x Ø25 top
32	3P+E			K13734RED 6	2.5	35	2.5	25	2 x Ø25 top
Earth Hour Position					*Solid or Stranded conductors				

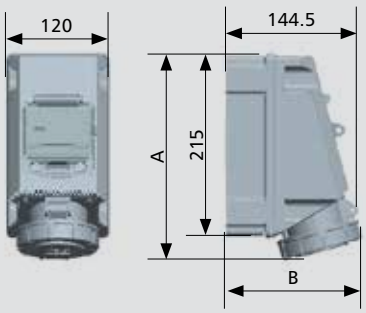

AMPS	PIN. CONFIGURATION	100-130V 50-60HZ	200-250V 50-60HZ	380-415V 50-60HZ	200/346-240/415V 50-60HZ	DIMENSIONS IN MM		TERMINAL CAPACITY* MM²	CABLE ENTRY KNOCKOUTS	FIXING CENTRES
		LIST NO	LIST NO	LIST NO	LIST NO	A	B			
16A	2P+E	K73713YEL 4	K73714BLU 6			233	135	1.5-10	Ø20/25+Ø25/32 top and bottom	108×165
16A	3P+E		K73717BLU 9	K73715RED 6		233	141	1.5-10	Ø20/25+Ø25/32 top and bottom	108×165
16A	3P+N+E				K73716RED 6	233	147	1.5-10	Ø20/25+Ø25/32 top and bottom	108×165
32A	2P+E	K73718YEL 4	K73733BLU 6			241	153	1.5-10	Ø20/25+Ø25/32 top and bottom	108×165
32A	3P+E		K73736BLU 9	K73734RED 6		241	153	1.5-10	Ø20/25+Ø25/32 top and bottom	108×165
32A	3P+N+E				K73735RED 6	241	159	1.5-10	Ø20/25+Ø25/32 top and bottom	108×165
Earth Hour Position						*Solid or Stranded conductors				

Commando Combi™ Technical

Switchsocket Outlets
Interlocked Pre-wired with 30mA RCD
16 and 32 Amp

IP67 WATERTIGHT

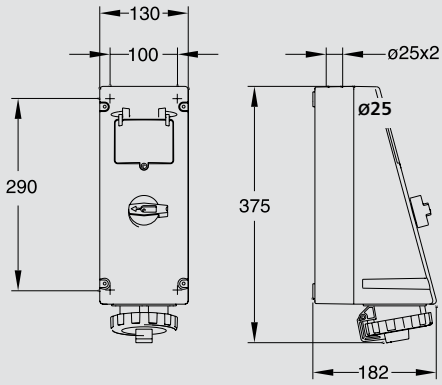

AMPS	PIN. CONFIGURATION	100-130V 50-60HZ	200-250V 50-60HZ	200/346-240/415V 50-60HZ	RCD TERMINAL CAPACITY* MM²		EARTH TERMINAL CAPACITY* MM²		CABLE ENTRY KNOCKOUTS	FIXING CENTRES
		LIST NO	LIST NO	LIST NO	MIN	MAX	MIN	MAX		
16	2P+E	K13346YEL 6	K13348BLU 6		1.5	35	2.5	25	2 x Ø25 top	100 x 290
16	3P+E			K13350RED 6	1.5	35	2.5	25	2 x Ø25 top	100 x 290
16	3P+N+E			K13351RED 6	1.5	35	2.5	25	2 x Ø25 top	100 x 290
32	2P+E	K13347YEL 6	K13349BLU 6		2.5	35	2.5	25	2 x Ø25 top	100 x 290
32	3P+E			K13352RED 6	2.5	35	2.5	25	2 x Ø25 top	100 x 290
32	3P+N+E			K13353RED 6	2.5	35	2.5	25	2 x Ø25 top	100 x 290
Earth Hour Position					*Solid or Stranded conductors					

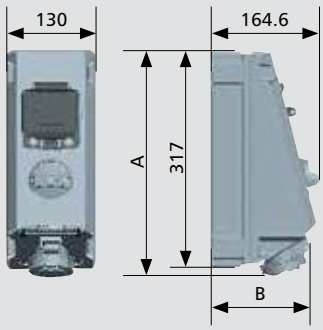

AMPS	PIN. CONFIGURATION	100-130V 50-60HZ	200-250V 50-60HZ	380-415V 50-60HZ	200/346-240/415V 50-60HZ	DIMENSIONS IN MM		TERMINAL CAPACITY* MM²	CABLE ENTRY KNOCKOUTS	FIXING CENTRES
		LIST NO	LIST NO	LIST NO	LIST NO	A	B			
16A	2P+E	K73346YEL 4	K73348BLU 6			330	143	1.5-10	Ø20/25+Ø25/32 top and bottom	118×261
16A	3P+E		K73354BLU 6	K73350RED 6		330	149	1.5-10	Ø20/25+Ø25/32 top and bottom	118×261
16A	3P+N+E				K73351RED 6	330	155	1.5-10	Ø20/25+Ø25/32 top and bottom	118×261
32A	2P+E	K73347YEL 4	K73349BLU 6			338	161	1.5-10	Ø20/25+Ø25/32 top and bottom	118×261
32A	3P+E		K73355BLU 6	K73352RED 6		338	161	1.5-10	Ø20/25+Ø25/32 top and bottom	118×261
32A	3P+N+E				K73353RED 6	338	167	1.5-10	Ø20/25+Ø25/32 top and bottom	118×261
Earth Hour Position								*Solid or Stranded conductors		

Commando Combi™ Technical

Twin Surface Socket Outlet 16 and 32 Amp

IP44 SPLASHPROOF

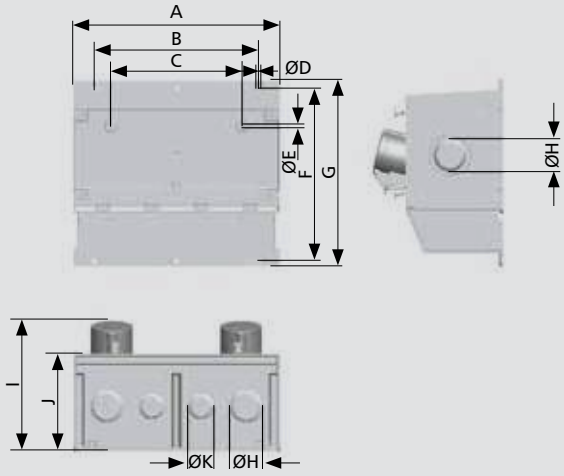

AMPS	PIN. CONFIG-URATION	100-130V 50-60HZ	200-250V 50-60HZ	EARTH TERMINAL CAPACITY MM²		DIMENSIONS IN MM						CABLE ENTRY KNOCKOUTS			FIXING CENTRES	
		LIST NO	LIST NO	MIN	MAX	A	D	E	G	I	J	H	K	L	BXF	C
16A	2P+E	K73143YEL 4	K73144BLU 6	1.5	10	252	6	4.5	228	158.8	118.7	2xØ40	4xØ32	4xØ40	200x210	160

Earth Hour Position

Twin Surface Socket Outlet with Individual 30mA RCD Protection 16 and 32 Amp

IP44 SPLASHPROOF

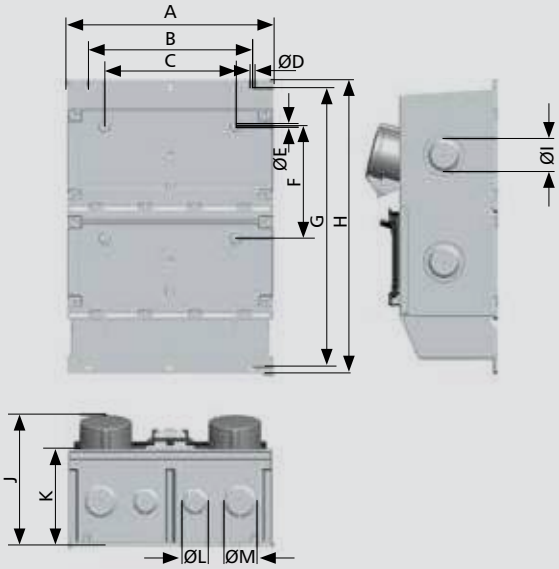

AMPS	PIN. CONFIG-URATION	100-130V 50-60HZ	200-250V 50-60HZ	380-415V 50-60HZ	200/346-240/415V 50-60HZ	EARTH TERMINAL CAPACITY MM²		DIMENSIONS IN MM						CABLE ENTRY KNOCKOUTS			FIXING CENTRES	
		LIST NO	LIST NO	LIST NO	LIST NO	MIN	MAX	A	D	E	H	J	K	I	L	M	BXG	CXF
16A	2P+E	K73173YEL 4	K73174BLU 6			1.5	65	252	6	4.5	358	158.8	118.7	4xØ40	4xØ32	4xØ40	200x340	160x137
16A	3P+E			K73175RED 6		1.5	65	252	6	4.5	358	158	118.7	4xØ40	4xØ32	4xØ40	200x340	160x137
16A	3P+N+E				K73176RED 6	1.5	65	252	6	4.5	358	160.1	118.7	4xØ40	4xØ32	4xØ40	200x340	160x137
32A	2P+E		K73184BLU 6			1.5	65	252	6	4.5	358	170.5	118.7	4xØ40	4xØ32	4xØ40	200x340	160x137
32A	3P+E			K73185RED 6		1.5	65	252	6	4.5	358	170.5	118.7	4xØ40	4xØ32	4xØ40	200x340	160x137
32A	3P+N+E				K73186RED 6	1.5	65	252	6	4.5	358	171.1	118.7	4xØ40	4xØ32	4xØ40	200x340	160x137

Earth Hour Position

Commando Combi™ Technical

Socket Outlets
Single Pre-wired with 30mA RCD
63 Amp

IP44 SPLASHPROOF

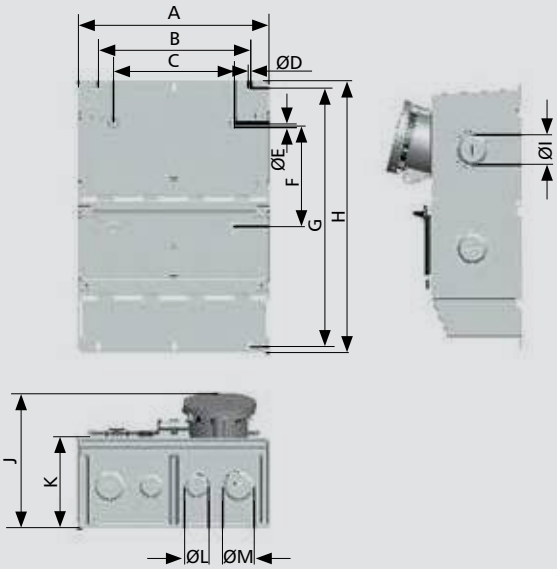

AMPS	PIN. CONFIG-RATION	100-130V 50-60HZ	200-250V 50-60HZ	380-415V 50-60HZ	EARTH TERMINAL CAPACITY MM²		DIMENSIONS IN MM						CABLE ENTRY KNOCKOUTS			FIXING CENTRES	
		LIST NO	LIST NO	LIST NO	MIN	MAX	A	D	E	H	J	K	I	L	M	BXG	CXF
63A	2P+E		K73463BLU 6		1.5	65	252	6	4.5	358	177.9	118.7	4xØ40	4xØ32	4xØ40	200x340	160x137
63A	3P+N+E			K73465RED 6	1.5	65	252	6	4.5	358	177.9	118.7	4xØ40	4xØ32	4xØ40	200x340	160x137

Earth Hour Position

PRODUCT APPLICATION

DESIGN SERVICE TOOL

MK Electric has created a unique product configurator tool that enables interior designers to experiment with its MK Elements Collection on a tablet or laptop.

Selecting front plates to match interior finishes such as a black granite countertop or a metallic finish to blend with stainless steel appliances has never been easier. The tool allows designers to work with their clients to narrow that selection down to 2-3 just by having the ability to show the selected background or surroundings. When designs of customised light switches and sockets are cached on the device they can be stored for later use or emailed when designers are back online.

To find out more visit Designtool.mkelements.com

Sentry Technical

Range	Technical Data
Circuit Protection	
Sentry Consumer units and a wide variety of modular protection and control products	576-604
Sentrysocket RCD protected switchsockets with active and passive control circuits	606-607

For a full range of corresponding products, see pages 271-286 in the product selector.

Sentry Technical

Metal Consumer Units and Enclosures

Standards and approvals

All Sentry consumer units are designed to fully comply with the requirements of BS EN 61439-3.

TECHNICAL SPECIFICATION

ELECTRICAL

MAXIMUM CURRENT RATING
All Sentry consumer units have a maximum rating of 100A except the 4 module range which is rated at 63A

TERMINAL CAPACITY
16mm² earth and neutral

RATED FREQUENCY
50Hz

RATED OPERATIONAL VOLTAGE
Consumer unit: 220-250V

RATED INSULATION VOLTAGE
Consumer unit: 300V

SHORT CIRCUIT WITHSTAND
16kA rms (based on the use of a BS 1361 Type 2 fuse of rating not exceeding 100A)

EARTHING SYSTEM
Suitable for use with TN-S, TN-C-S and TT systems

SPLIT LOAD
Split load units are supplied with a pre-fitted switch, RCD(s) and suitable cables

Description

Specific consumer unit configurations have been designed to provide flexible solutions in meeting the requirements of the 17th Edition with regards to RCD protection for circuits, cables and socket outlets. MK Sentry Metal Consumer units allow for protected and unprotected ways with the circuits being split across up to 2 RCDs, whilst the labelling sheet allows for full identification of all circuits.

Sentry Metal Consumer units and enclosures are designed on a modular basis, with 4 to 21 module enclosures in the range, to accommodate a wide variety of MK modular protection and control products. Sentry Metal Consumer units provide a housing with facility for earthing the metal box.

The enclosures are provided with ample wiring space and cable entry points.

Colours / finishes

All Sentry Metal Consumer units are colored in white (UV protected powder coated paint).

Certain models are provided with a pre-assembled split load arrangement with switch and up to 2 RCDs. The range is complemented by a versatile selection of small four module enclosures suitable for housing RCDs or other combinations of Sentry products.

All Sentry Metal Consumer Units have neutral and earth terminal bars with 16mm² capacity for solid stranded copper cables.

For enquiries where large number of similarly designed consumer units i.e. specified. MK can provide complete pre-assembled factory built units, subject to certain conditions. For further information please contact the MK Electric Technical Services Department (01268 563720).

FEATURES

- Attractive styling
- Modular design
- Suitable for most residential, commercial and light industrial applications
- Single, dual and RCD consumer units available for 17th Edition compliance
- Fully comply with British and European Harmonised Standards
- Available as an empty enclosure or prefitted with switch disconnector and up to 2 RCDs
- Custom build options available

Sentry Technical

TECHNICAL SPECIFICATION

PHYSICAL

AMBIENT OPERATING TEMPERATURE
-5°C to +40°C (not to exceed an average of more than 35°C in any 24 hour period

IP RATING
IP2XC

WEIGHTS
4 WAY: 1.9kg
8 WAY: 2.8kg
12 WAY: 3.4kg
16 WAY: 4.0kg
21 WAY: 4.7kg

METAL CONSUMER UNITS

WAYS	DIMENSIONS		
	A OVERALL WIDTH	B DISTANCE BETWEEN CENTRES OF FIXING HORIZONTAL	C DISTANCE BETWEEN FIXING CENTRES VERTICALLY AS ORIENTATED IN THE DIAGRAMS
4	144	85	147
8	238	168	147
12	310	240	147
16	382	308	147
21	472	400	147

Dimensions (mm)

Consumer unit

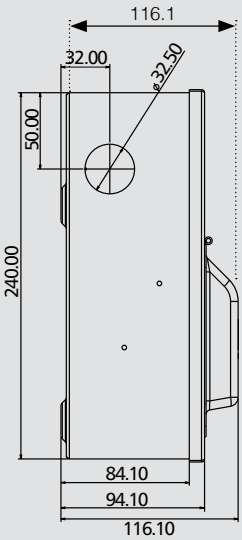

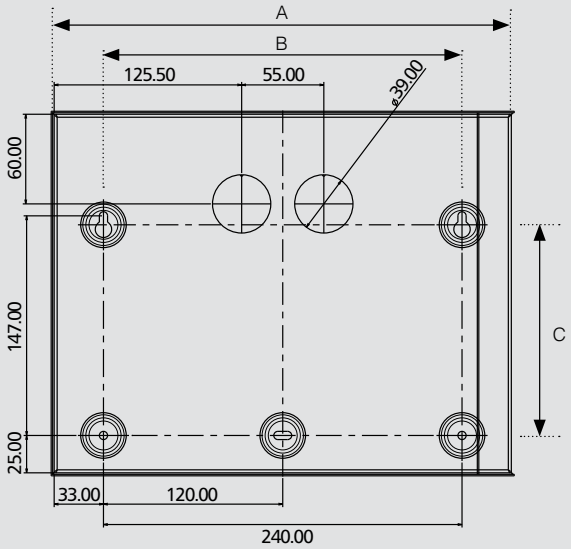

Dimensions (mm)

Knockout

See Cable Management Section for male bushed flanges to suit all knockouts.

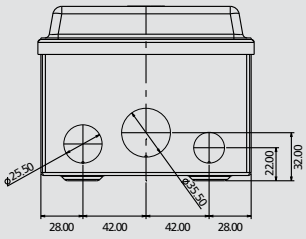

4 Way

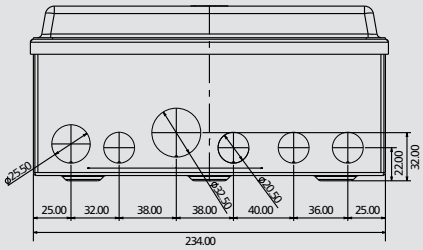

8 Way

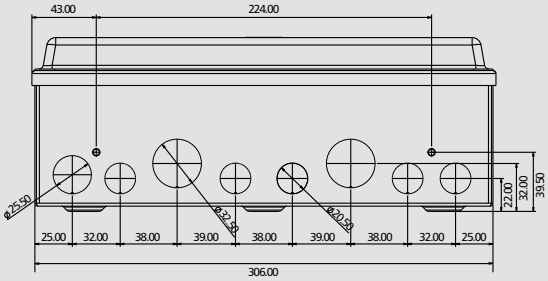

12 Way

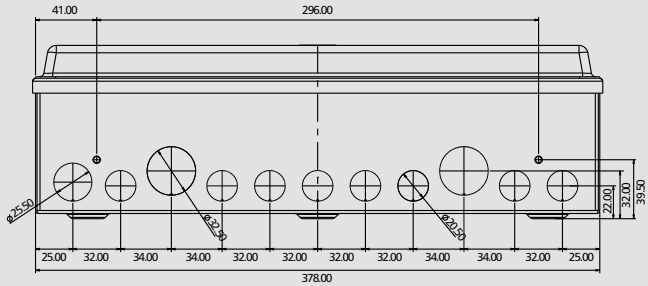

16 Way

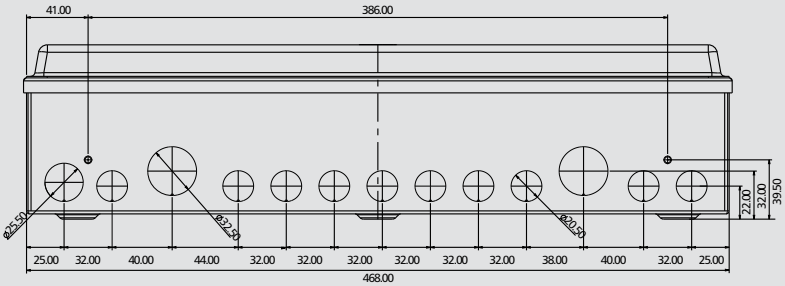

21 Way

Sentry Technical

Consumer Units and Enclosures

Standards and approvals

All Sentry consumer units are designed to fully comply with the requirements of BS EN 61439-3.

TECHNICAL SPECIFICATION

ELECTRICAL

MAXIMUM CURRENT RATING
All Sentry consumer units have a maximum rating of 100A except K5504s, K5604s, which are rated at 63A

TERMINAL CAPACITY
16mm² earth and neutral

RATED FREQUENCY
50Hz

RATED OPERATIONAL VOLTAGE
Consumer unit: 220-250V
2 module enclosure: 220-250V
4 module enclosure: 220-415V

RATED INSULATION VOLTAGE
Consumer unit: 300V
2 module enclosure: 300V
4 module enclosure: 660V

SHORT CIRCUIT WITHSTAND
16kA rms (based on the use of a BS 1361 Type 2 fuse of rating not exceeding 100A)

EARTHING SYSTEM
Suitable for use with TN-S, TN-C-S and TT systems

SPLIT LOAD
Split load units are supplied with a pre-fitted switch, RCD and suitable cables.

The following versions are offered:

	MAIN INCOMER	RCD
K5682s	100A Switch	63A
K5662s	100A Switch	80A
K5666s	100A Switch	63A
K5686s	100A Switch	80A
K5681s	100A Switch	80A
K5582s	100A Switch	63A
K5566s	100A Switch	63A
K5586s	100A Switch	80A
K5581s	100A Switch	80A

Description

Specific consumer unit configurations have been designed to provide flexible solutions in meeting the requirements of the 17th Edition with regards to RCD protection for circuits, cables and socket outlets. MK Sentry Consumer Units, available in insulated and metal versions, allow for protected and unprotected ways with the circuits being split across up to 3 RCDs, whilst the labelling sheet allows for full identification of all circuits.

Sentry consumer units and enclosures are available in both surface metal and insulated types, designed on a modular basis, with 2 to 21 module enclosures in the range, to accommodate a wide variety of MK modular protection and control products.

Surface insulated units provide an all insulated housing. Metal units provide a housing with facility for earthing the metal box.

The enclosures are provided with ample wiring space and cable entry points.

Colours / finishes

All surface insulated consumer units have a textured magnolia cover and lid. The surface metal consumer units are white (powder coated paint). The flush bases are of galvanized steel.

Certain models are provided with a pre-assembled split load arrangement with switch and up to 3 RCDs. The range is complemented by a versatile selection of small, two and four module enclosures suitable for housing RCDs or other combinations of Sentry products. A 2 module enclosure K5592s is suitable for housing the one module RCBO.

All Sentry Consumer Units have neutral and earth terminal bars with 16mm2 capacity for solid stranded copper cables.

For enquiries where large number of similarly designed consumer units i.e. specified. MK can provide complete pre-assembled factory built units, subject to certain conditions. For further information please contact the MK Electric Technical Services Department (01268 563720).

FEATURES

- Attractive styling
- Modular design
- Suitable for most residential, commercial and light industrial applications
- Single, dual and triple RCD consumer units available for 17th Edition compliance
- Fully comply with British and European Harmonised Standards
- Available as an empty enclosure or prefitted with switch disconnector and up to 3 RCDs
- Factory built options available

For a full range of corresponding products, see pages 271-291 in the product selector.

Sentry Technical

TECHNICAL SPECIFICATION

ELECTRICAL (WEATHERPROOF ENCLOSURES ONLY)

MAXIMUM CURRENT RATING
5702s 2 pole devices up to 100A
5704s 4 pole devices up to 63A

Note:
5702s – Can accept up to 4 module ways with removal of moulded blanks.

5704s – Can accept up to 8 module ways with removal of moulded blanks.

TERMINAL CAPACITY
5702s: 4 x 6mm² earth and neutral
5704s: 2 x 6mm² and 6 x 4mm² earth and neutral.

RATED OPERATIONAL VOLTAGE
220-415V

RATED INSULATION VOLTAGE
660V

Dimensions (mm)

Note: Knockout details on following page

Consumer unit

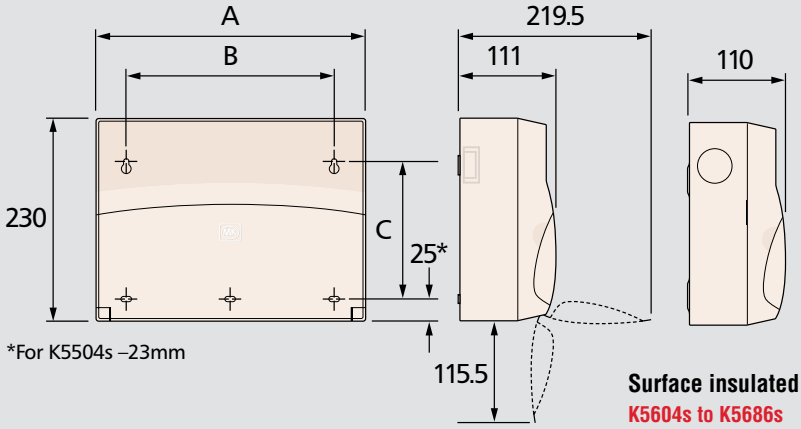

TECHNICAL SPECIFICATION

PHYSICAL

AMBIENT OPERATING TEMPERATURE
–5°C to +40°C (not to exceed an average of more than +35°C in any 24 hour period)

IP ratings: (see also 'Service Conditions', below)

CONSUMER UNIT	IP2XC
2 module enclosure 5502s	IP3X
2 module enclosure 5702s	IP65
2 module enclosure K5592s	IP30
4 module enclosure 5504s	IP3X
4 module enclosure 5604s	IP3X
4 module enclosure 5704s	IP65
Max. installation altitude	2000m

SURFACE INSULATED K5604S / K5686S

UNIT	MODULES	DIMENSIONS		
		A	B	C
SURFACE INSULATED	4	140	70	156
	8	234	164	156
	12	306	236	156
	16	378	308	156
	21	468	398	156

Sentry Technical

Switch Disconnectors

Standards and approvals

Sentry switch disconnectors are designed to fully comply with the requirements of BS EN 60947-3.

They all feature positive contact status indication in accordance with the 17th Edition IEE Wiring Regulations (537.2.2.1 and 537.3.2.2).

TECHNICAL SPECIFICATION

ELECTRICAL

CATEGORY OF DUTY
AC22A

LOAD TYPE CAPABILITY
Both resistive and inductive

OPERATING VOLTAGE
240V a.c.

OPERATING FREQUENCY
50Hz

	5560S	5500S
RATED OPERATIONAL CURRENT LE	63A	100A
RATED DUTY	Uninterrupted	Uninterrupted
RATED MAKING CAPACITY LC	189A rms	300 rms
RATED SHORT TIME WITHSTAND CURRENT LCW	2kA rms for 1 sec	2kA rms for 1 sec
RATED SHORT CIRCUIT MAKING CAPACITY LCM	3kA peak	3kA peak
RATED CONDITIONAL SHORT CIRCUIT CURRENT	6kA rms prospective	6kA rms prospective

PHYSICAL

AMBIENT OPERATING TEMPERATURE
–5°C to +40°C

IP RATING
Front face IP3X, screw IP2X

TIGHTENING TORQUE
3Nm

MAX INSTALLATION ALTITUDE
2000 metres

RATING SPECIFICATION

SWITCH DISCONNECTOR	RATING
5500s	100A
5560s	63A

Description

The Sentry range offers a choice of switch disconnector rated at either 100A or 63A.

The operating dolly is capable of being locked in either the ON or OFF position. When locked in the ON position it will no longer operate as an isolator. Positive indication of the opening of the contacts is only given when the green stripe can be seen on the dolly.

The terminals are of a tunnel design and offer a generous cable capacity of 50mm² for solid stranded conductors and 35mm² for flexible conductors, on both current ratings.

Category of duty

The Sentry switch disconnector is capable of switching both resistive and inductive loads and has a category of duty of AC22A.

FEATURES

- Meet BS EN and IEE Wiring Regulation requirements
- Choice of current ratings
- Tunnel design terminals for ease of wiring
- Generous cable capacity
- Lockable operating dolly
- Make first, break last on neutral

Dimensions (mm)

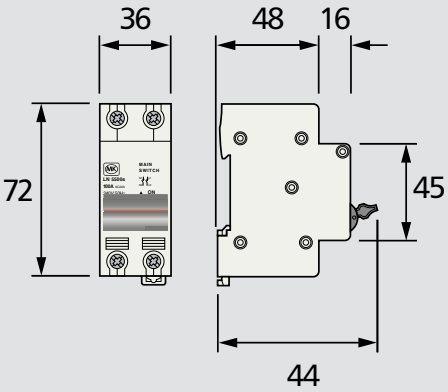

Installation

The Sentry switch disconnector is designed to accept both cable-in/cable-out and direct-to-busbar connections.

The terminal screws are touch-proof to IP2X, captive and feature combination heads.

Miniature Circuit Breakers (MCBs)

Standards and approvals

Sentry switch disconnectors are designed to fully comply with the requirements of BS EN 60947-3.

They all feature positive contact status indication in accordance with the 17th Edition IEE Wiring Regulations (537.2.2.1 and 537.3.2.2).

TECHNICAL SPECIFICATION

ELECTRICAL

VOLTAGE RATING
230V/400V a.c.

OPERATING FREQUENCY
50Hz

RATED SHORT CIRCUIT CAPACITY ICN
6000A

SERVICE SHORT CIRCUIT CAPACITY ICS
6000A

When backed up by a BS 1361, 100A fuse, then the breaking capacity of the MCB is increased to 16,000A.

Energy limiting class: **3**

PHYSICAL

AMBIENT OPERATING TEMPERATURE
–5°C to +40°C

CALIBRATION TEMPERATURE
+30°C

IP RATING
Front face IP4X, screw IP2X

TERMINAL CAPACITY
35mm²

TIGHTENING TORQUE
3Nm Max

MAX. INSTALLATION ALTITUDE
2000 metres

OFF

ON

Description

Sentry MCBs are of the thermo-magnetic, current limiting type and are available with either Type B or Type C operating characteristics.

The operating dolly may be locked in either the ON or OFF position without affecting the ability of the trip mechanism to operate. The contacts themselves are manufactured from carefully chosen materials, selected specifically for their low electrical resistance and low propensity to weld under fault conditions.

Positive contact status indication

When the green indicator is visible, then a contact gap of 4mm has been achieved. Sentry MCBs may therefore be used as single pole isolating switches where appropriate.

Terminals

The Sentry MCB features tunnel terminals of 35mm² capacity on all ratings. Each terminal has a protective shutter to prevent cable being installed incorrectly. The terminal screws are touch proof to IP2X, captive and feature combination heads.

Modes of operation

The mechanism of the Sentry MCB has been carefully designed and engineered using thermal and magnetic elements to detect overcurrents due to both overload and fault currents. The MCB will operate and interrupt the supply to prevent damage to the installation.

The thermal component is a carefully calibrated, thermally operated bi-metal element.

Larger overloads and fault current situations are dealt with using the magnetic tripping mode of the MCB. This acts very quickly, overriding the thermal operation.

BS EN 60898 requires the tripping to occur within 100 milliseconds and the design of the Sentry MCB allows fault currents of up to 6000A (M6) to be safely interrupted well within this time scale.

Sentry Technical

Miniature Circuit Breakers (MCBs)

RATING SPECIFICATION	
TYPE B SINGLE POLE	RATING
5903s	3A
5906s	6A
5910s	10A
5916s	16A
5920s	20A
5925s	25A
5932s	32A
5940s	40A
5945s	45A
5950s	50A
TYPE C SINGLE POLE	RATING
8703s	3A
8706s	6A
8710s	10A
8716s	16A
8720s	20A
8725s	25A
8732s	32A
8740s	40A
8750s	50A

FEATURES

- Meet BS EN and IEE Wiring Regulation requirements
- Trip-free' mechanism
- Positive contact status indicator
- Tunnel type, touch-proof, captive terminals
- Generous terminal capacity
- Can be used as single pole isolating switch
- Protective shutter

Description (continued)

Operating characteristics

TYPE B

The magnetic operating limits are between 3 and 5 times the current rating of the MCB. Under these conditions the mechanism of a 10A MCB will operate between 30A and 50A in an overcurrent situation.

TYPE C

In the case of Type C MCBs, the magnetic operating limits are between 5 and 10 times the current rating of the MCB. Under these conditions the mechanism of a 10A MCB will operate between 50A and 100A in an overcurrent situation.

Type C devices are capable of supplying the majority of inductive and capacitive loads such as motors, transformers and tungsten or fluorescent lighting.

Time/Current and Energy let through characteristics of Sentry MCBs are shown graphically on the Time current characteristics chart (See separate document).

TYPE D

The Type D MCB is suitable for applications involving equipment generating very high inrush currents, e.g. x-ray equipment, transmitters and computer power supplies. The magnetic operating limits are between 10 and 50 times the current rating of the MCB.

(For Modular Combi use only)

Installation

Selection of the most suitable MCB should take into account the following considerations:

1. Operating voltage and frequencies

It is possible to use the Sentry MCB on other voltages than 230/400V a.c. 50Hz, but it should be noted that this takes the MCB outside the scope of BS EN 60898.

2. Type of load

RESISTIVE

No derating is required in the case of resistive loads.

INDUCTIVE

In the case of inductive loads from direct-on-line motors, the surge on energisation can produce up to 5 times full load current, which may be present for several seconds. It is therefore recommended that Type C MCBs are used for such circuits.

When using assisted start motors, the usually quoted figures are 2.5 times the full load current, for periods generally longer than those for direct-on-line starters. It is thus important to establish the degree of inrush current in order to select a suitable MCB. In all instances, reference should be made to both the motor manufacturer's curves and MK's circuit breaker curves in order to select the compatible miniature circuit breaker.

CAPACITIVE

Surges on energisation, for example with discharge lighting, may well reach 25 times the rated current of the device, but only for very short duration. Type B devices will often be adequate, but for more specialised circuits, a Type C may be required. The lighting fitting manufacturer's recommendations should be observed.

Miniature Circuit Breakers (MCBs)

3. Fault breaking capacity

All Sentry MCBs have a short circuit breaking capacity of 6,000A (M6).

For applications where the prospective fault current is in excess of this, a BS 1361, 100A (maximum) fuse should be used upstream of the MCB to provide a system breaking capacity of 16,000A (in accordance with BS EN 60439-3).

4. Discrimination

A Sentry MCB consumer unit will normally be supplied via an HRC fuse. The HRC in such instances will be the major device and remain unaffected by any fault current which causes the MCB to operate.

The level of fault current up to which this can be assured is determined by comparing the I^2t characteristics of the two devices. Discrimination will theoretically occur up to the level at which the value of the total operating I^2t of the MCB is below the minimum pre-arcing I^2t of the fuse, although in practice, discrimination will be achieved at higher levels than this.

5. Cable protection

The current carrying capacity of the cable should always exceed the current rating of the MCB to prevent damage.

However, should this not be the case, a further calculation may show that the MCB can still interrupt the current in a sufficiently short time to prevent overheating of the cable insulation. Although this will prevent mechanical damage to the cables, further overload protection should be provided by a separate device, e.g. a motor overload relay.

In case of doubt please contact the MK Technical Sales and Service Department.

Dimensions (mm)

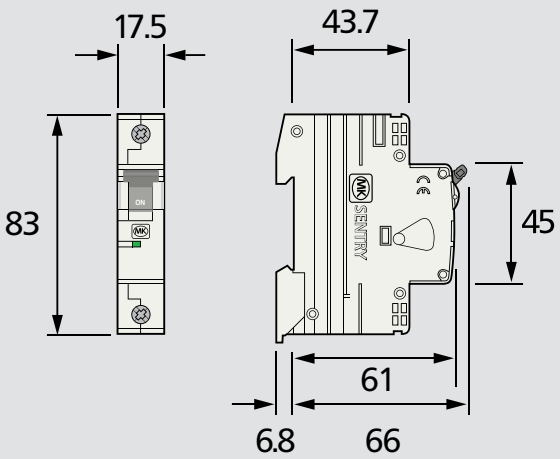

Sentry Technical

Tripping Characteristics Curve

Limit specified in BS EN 60898 1: 2003
In: Rated Current
B TYPE:3A to 50A
C TYPE: 3A to 50A
Reference calbi. temp. 30°C

Lower Limit as per Standard

Upper Limit as per Standard

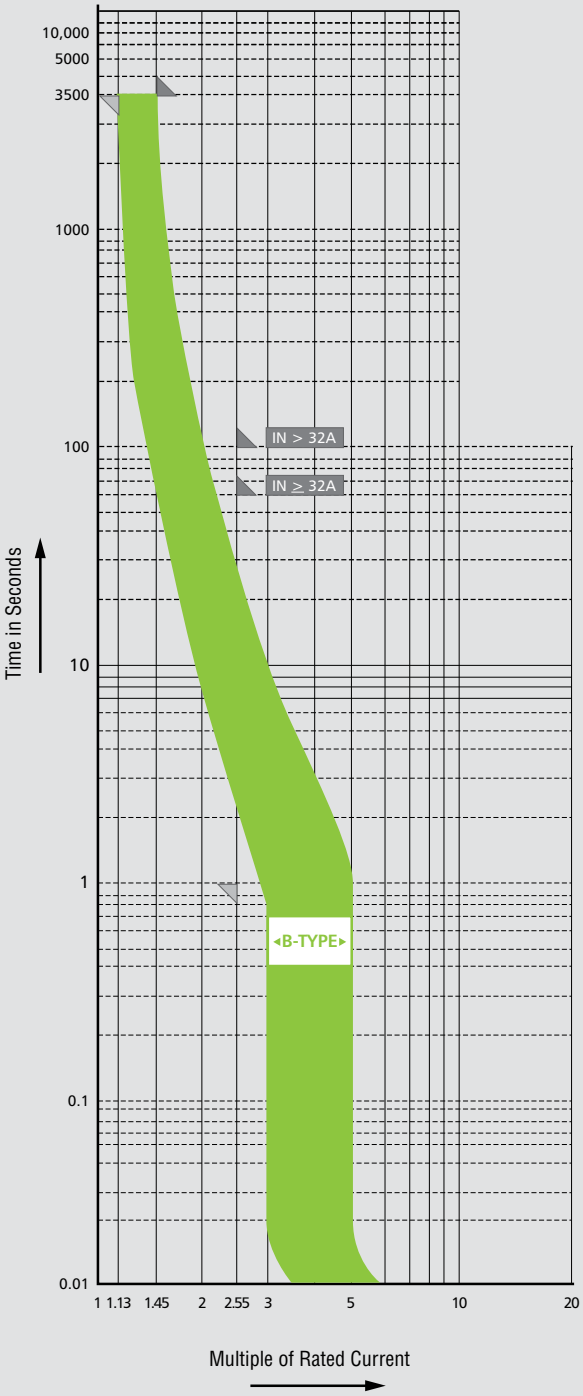

B-TYPE

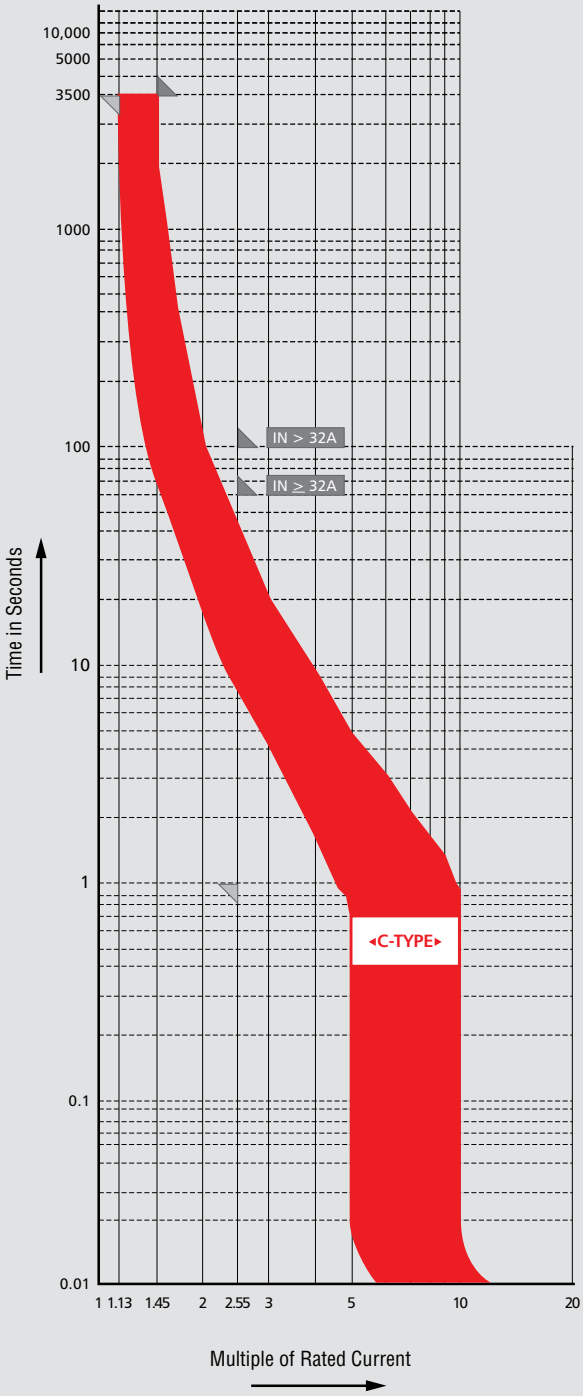

C-TYPE

I^2t curves

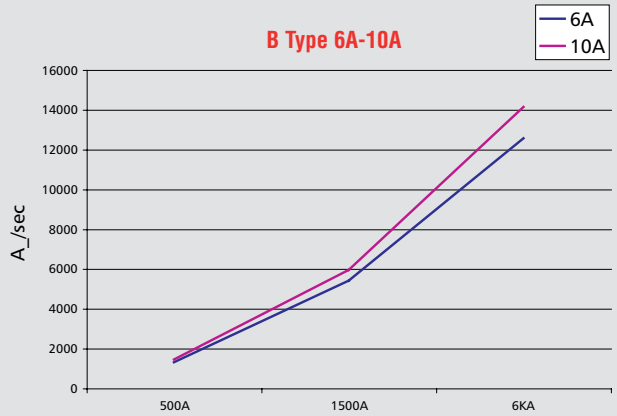
B Type 6A-10A
6A
10A
A_/sec
16000
14000
12000
10000
8000
6000
4000
2000
0
500A
1500A
6KA

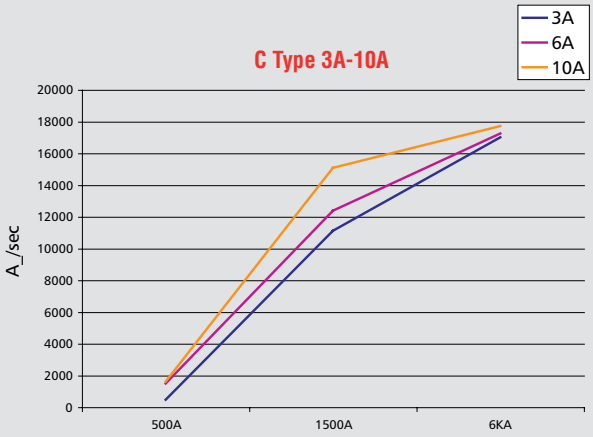
C Type 3A-10A
3A
6A
10A
A_/sec
20000
18000
16000
14000
12000
10000
8000
6000
4000
2000
0
500A
1500A
6KA

B Type 16A-32A
16A
20A
32A
A_/sec
25000
20000
15000
10000
5000
0
500A
1500A
6KA

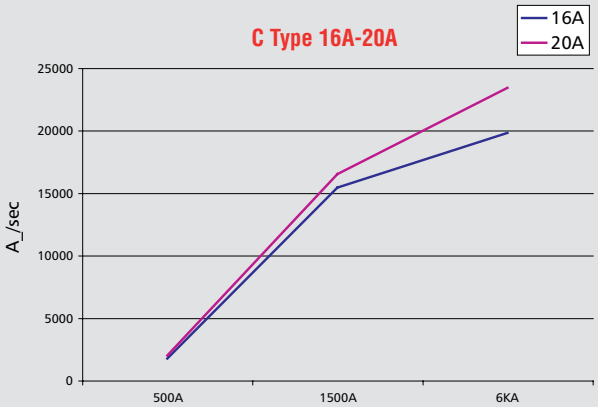
C Type 16A-20A
16A
20A
A_/sec
25000
20000
15000
10000
5000
0
500A
1500A
6KA

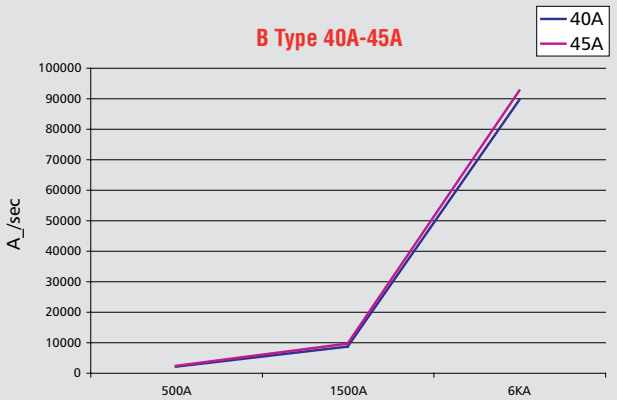
B Type 40A-45A
40A
45A
A_/sec
100000
90000
80000
70000
60000
50000
40000
30000
20000
10000
0
500A
1500A
6KA

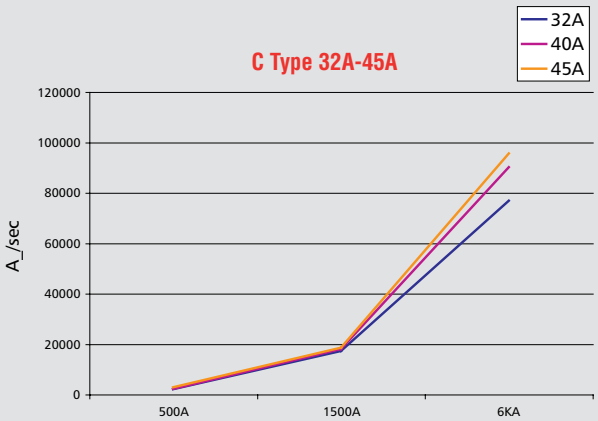
C Type 32A-45A
32A
40A
45A
A_/sec
120000
100000
80000
60000
40000
20000
0
500A
1500A
6KA

Sentry Technical

Residual Current Breakers with Overcurrent Protection (RCBOs)

Standards and approvals

All Sentry RCBOs are designed to fully comply with the relevant requirements of BS EN 61009-1, BS IEC 61 009-2-2, BS 61543 for EMC.

The RCBOs feature positive contact status indication in accordance with 17th edition IEE Wiring Regulations (537.2.2.2 and 537.3.2.2).

TECHNICAL SPECIFICATION

ELECTRICAL

OPERATING VOLTAGE
230V a.c.

OPERATING FREQUENCY
50Hz

RATED SHORT CIRCUIT CAPACITY ICN
6,000A

SERVICE SHORT CIRCUIT CAPACITY ICS
6,000A

When backed up by a BS 1361, 100A fuse, then the breaking capacity of the RCBO is increased to 16,000A.

Type AC

PHYSICAL

AMBIENT OPERATING TEMPERATURE
–25°C to + 40°C

IP RATING
Front face IP4X, screw IP2X

TERMINAL CAPACITY
Line in 25mm²
Line and neutral out 25mm²

TIGHTENING TORQUE
2.5Nm

MAX. INSTALLATION ALTITUDE
2000 metres

Description

The Sentry range features solid neutral type single pole RCBOs in one module format.

The one module Sentry RCBOs are a combination of a Type B MCB and a Residual Current Device. This enables both overcurrent protection and earth fault current protection to be provided by a single unit.

This combination allows earth fault protection to be restricted to a single circuit, thus ensuring that only the circuit with the fault is interrupted. (When groups of circuits are protected by an RCD, all circuits would be interrupted under fault conditions, which may cause unnecessary inconvenience).

The operating switch on all Sentry RCBOs may be locked in either the ON or OFF position without affecting the ability of the trip mechanism to operate.

Sentry RCBOs feature tunnel terminals of generous capacity, with 25mm² for live supply for live and neutral load terminals. The neutral supply (blue) and earth supply (white/cream) are provided via flying leads.

Mode of operation

As the RCBO is a combination of an MCB and RCD, reference should be made to the relevant technical information regarding these devices.

FEATURES

- Single module
- Meet BS EN and IEE Wiring Regulation requirements
- Allows both overcurrent and earth fault protection and detection
- Available in a range of current ratings
- Tunnel type terminals
- Generous terminal capacity
- Positive contact status indication

Residual Current Breakers with Overcurrent Protection (RCBOs)

RATING SPECIFICATION			
RATING RCBO	TRIPPING CURRENT	LIST NO. TYPE B	LIST NO. TYPE C
6A, 230V	30mA	7932s	8932s
10A, 230V	30mA	7933s	8933s
16A, 230V	30mA	7934s	8934s
20A, 230V	30mA	7935s	8935s
32A, 230V	30mA	7936s	8936s
40A, 230V	30mA	7937s	
45A, 230V	30mA	7938s	
50A, 230V	30mA	7939s	

Installation

Sentry RCBOs may be installed anywhere along the length of the busbar and will occupy one outgoing way.

Selection of the most suitable RCBO should take into account the following considerations:

1. Operating voltage and frequencies

2. Fault breaking capacity

For applications where the prospective fault current is in excess of this, a BS 1361, 100A (maximum) fuse should be used upstream of the RCBO to provide a system breaking capacity of 16,000A.

3. Cable protection

The current carrying capacity of the cable should always exceed the current rating of the RCBO, to prevent damage. However, should this not be the case, a further calculation may show that the RCBO can still interrupt the current in a sufficiently short time to prevent overheating of the cable insulation. Although this will prevent mechanical damage to the cables, further overload protection should be provided by a separate device, e.g. a motor overload relay.

In case of doubt please contact the Technical Sales and Service Department.

Dimensions (mm)

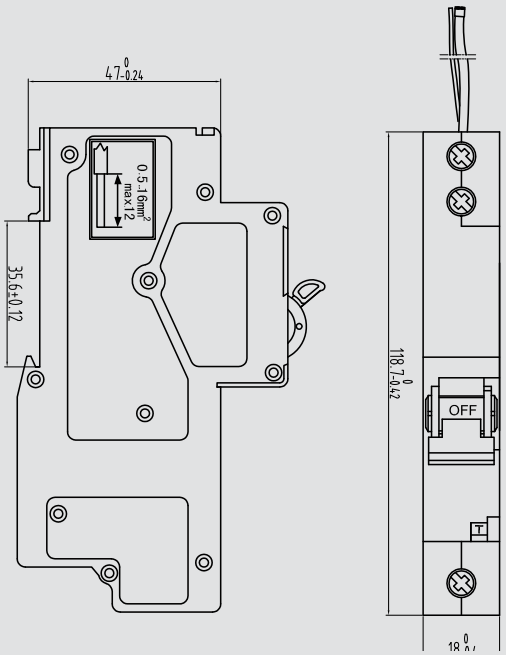

Sentry Technical

Residential 6kA Residual Current Devices (RCDs)

Standards and approvals

All Sentry RCDs are designed to fully comply with the requirements of BS EN 61 008:1995. IEC 1008:1990

They all feature positive contact status indication in accordance with 17th edition IEE Wiring Regulations (537.2.2.2 and 537 .3 .2 .2).

TECHNICAL SPECIFICATION

ELECTRICAL

RATED MAKING AND BREAKING CAPACITY /M
16 - 40A = 500A
63 - 80A = 800A
Type AC

RATED SHORT-CIRCUIT CURRENT / INC
16A - 40A = 6,000A (100A Fuse)
Rated residual short-circuit current /IAm: 16 - 100A = 6,000A

RATED VOLTAGES
2 pole devices, 230V

OPERATING VOLTAGES
2 pole devices, 230V - 100V to 250V

TRIPPING TIME
1 x IAn ~300ms
5 x IAn ~40ms

PHYSICAL

AMBIENT OPERATING TEMPERATURE
–25°C to + 40°C

IP RATING
Front face after installation of enclosure IP40

TERMINAL CAPACITY
Solid stranded - 1 x 1.5 - 35mm² Flexible with ferrule - 1 x 1 .5 - 35mm²

TIGHTENING TORQUE
3Nm

MAX. INSTALLATION ALTITUDE
2000 metres

Description

The Sentry range of RCDs offer a comprehensive selection of devices designed to meet most residential, commercial and light industrial requirements.

The range is two pole, a.c. fault current sensitive with a selection of current ratings from 16 to 80A and is available in a variety of tripping sensitivities.

When in the OFF position a contact gap of 4mm is present, enabling Sentry RCDs to be used as isolating switches where appropriate.

The operating dolly may be locked in either the ON or OFF position without affecting the ability of the trip mechanism to operate, i.e. the RCD is 'trip-free'. It is not possible to hold the contacts closed when a fault condition exists.

All Sentry RCDs incorporate a filtering device to provide protection against transient surges in the supply to the unit, thus reducing the occurrence of unwanted tripping.

FEATURES

- Meet BS EN and IEE Wiring Regulation requirements
- Extensive range to suit all specifications
- Protect against unwanted tripping
- Positive contact status indication
- Suitable for most residential, commercial and light industrial applications
- Offer a high degree of protection against electrocution in accidental shock hazard situations
- Two module, double pole units available up to 80A

Residential 6kA Residual Current Devices (RCDs)

RATING SPECIFICATION		
DOUBLE POLE, 2 MODULE		
RATING RCBO	TRIPPING CURRENT	LIST NO.
16A	30mA	7816s
32A	30mA	7832s
40A	30mA	7840s
63A	30mA	7860s
80A	30mA	7880s
63A	100mA	7560s
80A	100mA	7580s
63A	300mA	7660s
80A	300mA	7680s

Operation

The RCD provides an indication of an earth fault and contact status as detailed below.

The operating dolly provides the following indication:

I = Switched ON

O = Switched OFF

The contact status is shown via dolly markings.

In the event of an Earth Fault in the installation or the operation of the test button, the dolly will move to the OFF position. To re-connect the supply the dolly must be reset by moving it to the ON position.

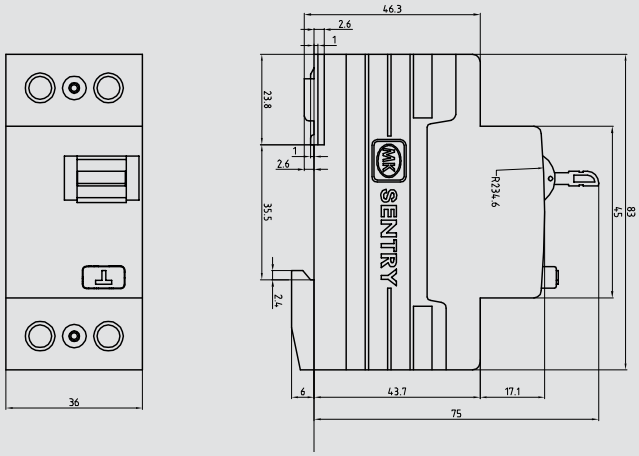

Testing

If an RCD is installed as additional protection for basic protection, it is a requirement of the IEE Regulations that the effectiveness of the RCD be verified. This must be achieved by a test simulating an appropriate fault condition and be independent of any test facility incorporated in the RCD. The test currents to be applied are as follows:

Test current	Condition
0.5 x I Δ n	RCD must not trip
1.0 x I Δ n	RCD must trip within 300mS
5.0 x I Δ n	RCD must trip within 40mS

Where I Δ n is the RCD's rated tripping current in accordance with wiring regulations and product standard BS EN 61008.

Sentry Technical

Industrial 10kA Residual Current Devices (RCDs)

Standards and approvals

All Sentry RCDs are designed to fully comply with the requirements of BS EN 61008:1995. IEC 1008:1990

They all feature positive contact status indication in accordance with the 17th Edition IEE Wiring Regulations (537.2.2.1 and 537.3.2.2).

TECHNICAL SPECIFICATION

ELECTRICAL

RATED MAKING AND BREAKING CAPACITY /M
16 - 40A = 500A
63 - 80A = 800A
100A = 1000A

Type AC

RATED SHORT-CIRCUIT CURRENT / INC
16A - 40A = 10,000A (63A Fuse)
63A - 80A = 10,000A (100A Fuse)
100A = 10,000A (125A Fuse)

RATED RESIDUAL SHORT-CIRCUIT CURRENT /IΔM
16 - 100A = 10,000A

RATED VOLTAGES
2 pole devices, 110V and 230V
4 pole devices, 230V to 440V

OPERATING VOLTAGES
2 pole devices, 110V - 100V to 250V
230V - 100V to 250V

4 pole devices, 185V - 440V

TRIPPING TIME
1 x IΔn ≤300ms
5 x IΔn ≤40ms

Time delay version
1 x IΔn - 150 - 500ms
5 x IΔn - 50 - 150ms

PHYSICAL

AMBIENT OPERATING TEMPERATURE
–25°C to +40°C

IP RATING
Front face after installation of enclosure IP40

TERMINAL CAPACITY
Solid stranded - 1 x 1.5 - 50mm²
Flexible with ferrule - 1 x 1.5 - 35mm²

TIGHTENING TORQUE
3Nm

MAX. INSTALLATION ALTITUDE
2000 metres

Description

The Sentry range of RCDs offers a comprehensive selection of devices designed to meet most residential, commercial and light industrial requirements.

The range includes two and four pole, a.c., d.c. fault current sensitive and time delayed models and a selection of current ratings from 16 to 100A is available in a variety of tripping sensitivities.

When in the OFF position a contact gap of 4mm is present, enabling Sentry RCDs to be used as isolating switches where appropriate.

Positive indication of the opening of the contacts is only given when contact status indicator shows green.

The operating dolly may be locked in either the ON or OFF position without affecting the ability of the trip mechanism to operate, i.e. the RCD is 'trip-free'. It is not possible to hold the contacts closed when a fault condition exists.

All Sentry RCDs incorporate a filtering device to provide protection against transient surges in the supply to the unit, thus reducing the occurrence of unwanted tripping.

FEATURES

- Meet BS EN and IEE Wiring Regulation requirements
- Extensive range to suit all specifications
- Protect against unwanted tripping
- Positive contact status indication
- Suitable for most residential, commercial and light industrial applications
- Offer a high degree of protection against electrocution in accidental shock hazard situations
- Two module, double pole units available up to 100A
- Indication of earth fault, via central dolly position

Industrial 10kA Residual Current Devices (RCDs)

RATING SPECIFICATION		
DOUBLE POLE, 2 MODULE		
RATING RCBO	TRIPPING CURRENT	LIST NO.
16A, 110V	10mA	6016s
16A, 110V	30mA	6416s
16A, 230V	10mA	6316s
16A, 230V	30mA	5716s
32A, 110V	30mA	6032s
32A, 230V	30mAs	6730s
40A, 230V	30mA	5740s
63A, 230V	30mA	5760s
63A, 230V	100mA	6160s
63A, 230V	300mA	5860s
80A, 230V	30mA	5780s
80A, 110V	30mA	6080s
80A, 230V	300mA	5880s
80A, 230V	100mA	6180s
100A, 230V	30mA	7700s
100A, 230V	100mA	6600s
100A, 230V	300mA	7800s
DOUBLE POLE, PULSATING D.C., FAULT CURRENT SENSITIVE, 2 MODULE		
16A, 230V	10mA	6216s
16A, 230V	30mA	6716s
32A, 230V	30mA	6630s
40A, 230V	30mA	5640s
63A, 230V	30mA	5660s
TIME DELAYED, 2 MODULE		
80A, 230V	100mA	6980s
100A, 230V	100mA	6400s
FOUR POLE, 4 MODULE		
25A, 230/400V	30mA	6425s
40A, 230/400V	30mA	6440s
40A, 230/400V	100mA	6240s
63A, 230/400V	30mA	6463s
63A, 230/400V	100mA	6363s
63A, 230/400V	300mA	6263s
FOUR POLE, PULSATING D.C., FAULT CURRENT SENSITIVE, 4 MODULE		
40A, 230/400V	30mA	6640s

Installation

Sentry RCDs must never be used as the sole method of basic protection, but are invaluable in providing supplementary protection in high risk environments where damage may occur.

Application

The choice of the most suitable RCD for a particular application should take into account the following considerations:

1. Sensitivity

10mA RCDs offer a high degree of protection against electrocution in an accidental shock hazard situation. They are of particular value in a high risk area where resistances external to the body are likely to restrict the earth fault current flowing through the body to less than 30mA and where 110V supply is being used.

30mA RCDs offer a high degree of protection in an accidental shock hazard situation and are by far the most popular sensitivity used in the United Kingdom. In a shock situation, the current flowing through the human body at 240V 50Hz could be between 80 and 240mA, depending on the resistance of the body in question. To ensure that there are no harmful physiological effects in such a situation, it is necessary for the RCD to operate within 300mS at 30mA and 40mS at 150mA. As the Sentry RCD typically operates well below these times, it clearly more than satisfies this requirement.

100mA RCDs may, in some circumstances, provide protection against electrocution in an accidental shock hazard situation. However, it is important to note that there is a likelihood that the earth fault current may be below the sensitivity of the RCD. This becomes increasingly likely if additional resistances to that of the human body are in the current path.

300mA RCDs provide protection against the risk of fire only. They do not provide protection against electrocution in an accidental shock hazard situation. A typical application would be lighting circuits where it is deemed that the risk of electric shock is small.

It is important to note that a current of less than 500mA flowing in a high resistance path is sufficient to bring metallic parts to incandescence and, potentially, initiate a fire.

2. Requirements of the IEE Wiring Regulations BS 7671

RCDs may be used to provide additional protection against both fault protection and basic protection.

Fault Protection

Defined as protection against electric shock under single fault conditions.

Effective earthing in conjunction with automatic disconnection should always be employed to protect against the effects of fault protection. The provision of a low resistance path back to the supply from the fault should ensure that the overcurrent device operates before damage occurs. This is the earth fault loop impedance.

In circumstances where the earth fault loop impedance in the circuit is too high to ensure operation of the overcurrent device, then the IEE Wiring Regulations allow the installation of an RCD. To comply with the Regulations, the earth loop impedance of the circuit (in ohms), multiplied by the rated tripping current of the RCD (in amperes) must not produce a value greater than 50. With this in mind, the maximum values of earth loop impedance permissible when installing an MK Sentry RCD are as follows:

$$Z_s\,(\max) = \frac{50}{I\Delta n} = \frac{50}{0.03} = 1667 \text{ Ohms}$$

Rated Tripping Current of RCD	Maximum Permissible Earth Fault Loop Impedance
10mA	5000 Ohms
30mA	1667 Ohms
100mA	500 Ohms
300mA	166 Ohms

RCD's are further specified for fault protection on TT systems (Regulation 411.5.2, 411.5.3 apply)

Sentry Technical

Industrial 10kA Residual Current Devices (RCDs)

Application (continued)

Direct Contact

Defined as “contact of persons or livestock with live parts”.

The Regulations recognise four main means of providing protection against direct contact which include enclosures and the use of extra low voltage systems.

However, the use of RCDs is specified by the Regulations in the following instances:

- A socket outlet rated at 32A or less which may reasonably be expected to supply portable equipment for use outdoors shall be protected by an RCD having the characteristics specified in Regulation 412-06-02. (Regulation 471-16-01 applies.)
- Where socket outlets are used to supply caravans on caravan sites, then they must be protected by an RCD having the characteristics specified in Regulation 412-06-02

Regulation 412-06-02 stipulates among other things that where supplementary protection is provided by residual current devices, their rated residual operating current must not exceed 30mA and that they must trip within 40ms at 5 times rated operating current.

Although RCDs must never be used as the sole method of direct contact protection, they are invaluable in providing supplementary protection in high risk environments where damage may occur. Typical applications include situations where equipment may be used outside or fed by trailing sockets, equipment accessible to children or equipment used in wet areas.

For these reasons RCDs are commonly found in schools, hospitals and residential installations.

3. Types of fault current

In an installation different types of fault current can occur. MK offer RCDs to suit these conditions.

Sentry Type AC RCDs are suitable for situations where there are residual sinusoidal alternating currents, whether applied suddenly or rising slowly. This is the most commonly used type of RCD in the UK.

Sentry Type A RCDs (i.e. pulsating d.c. fault current sensitive) are suitable for situations where there are residual sinusoidal alternating currents, whether suddenly applied or slowly rising.

These situations can occur with the use of semiconductor devices in modern electrical and electronic equipment, such as computers, printers, plotters, televisions, video cassette recorders and hi-fi equipment, is growing.

Such devices may result in the normal sinusoidal a.c. waveform generated by the mains electrical supply being ‘modified’. for example, the waveform may be rectified or, as in asymmetric phase control devices, the waveform may be chopped.

The resulting waveforms are said to contain a pulsating d.c. component as illustrated below.

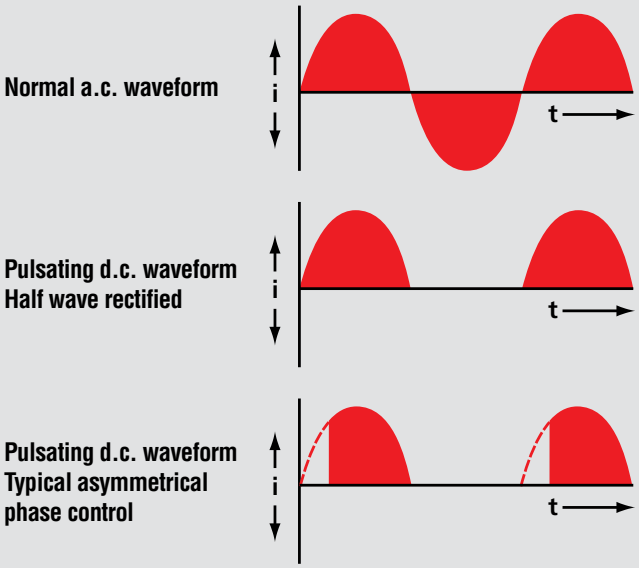

Industrial 10kA Residual Current Devices (RCDs)

Application (continued)

Pulsating d.c. fault current sensitive RCDs

Should a waveform containing a pulsating d.c. component develop an earth fault, then it is possible that it may not be detected by an “a.c. only” sensitive RCD. For this reason, the Sentry range contains RCDs designed to be sensitive to pulsating d.c. fault currents thus maintaining the intended degree of protection.

Type B RCDs are suitable for situations where there are residual sinusoidal alternating currents, residual pulsating direct currents and smooth d.c. and a.c. residual current of various frequencies, which would not trip Type AC or A RCDs.

These situations can occur in 50Hz a.c. installations with electronic equipment, e.g. frequency converters, UPS installations, power supply unit or high-frequency power converters.

The following symbols are used on the front plate of the device to indicate the type of RCD.

– type AC RCD.

– type A RCD.

– type B RCD.

4. Temperature

All Sentry RCDs are suitable for use in the temperature range –25°C to +40°C. This is indicated on the RCD by the symbol .

5. Time Delayed RCDs Type S (or selective)

When two or more Sentry RCDs are installed in series with one another, measures must be taken to ensure that they discriminate properly. In event of an earth fault, only the RCD immediately upstream from the fault should operate.

RCDs do not discriminate on rated tripping current alone, i.e. a 100mA rated RCD situated upstream from a 30mA rated RCD, will not offer inherent discrimination.

In order to ensure that discrimination is achieved, a Sentry Time Delayed RCD should be used. The in-built time delay period ensures that the downstream RCD opens the circuit before the upstream RCD starts to operate.

The maximum tripping time of a Sentry Time Delayed RCD is 500ms.

Please refer to the current edition of the Wiring Regulations BS 7671 for guidance on the use of these products.

6. 3 phase, 3 wire systems

Sentry 4 pole RCDs may be used to provide earth fault protection on 3 phase, 3 wire systems, as the current balance mechanism does not require a neutral to be connected in order to operate effectively.

Sentry Technical

Industrial 10kA Residual Current Devices (RCDs)

Operation

The RCD provides an indication of an earth fault and contact status as detailed below.

The operating dolly provides the following indication:

I = Switched ON

+ = Switched OFF due to Earth Fault or test button operation

0 = Switched OFF

The contact status is shown through the window.

Red = contact closed

Green = contact open (RCD is switched off)

In the event of an Earth Fault in the installation or the operation of the test button, the dolly will move to the central position (+) and the contact status indicator shows green. To re-connect the supply the dolly must be reset by moving to the off position before switching on.

ON I
RESET +
OFF 0

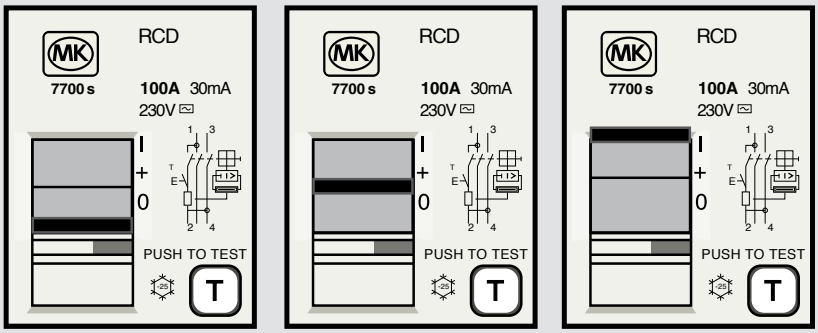

Testing

If an RCD is installed for additional protection against indirect contact, it is a requirement of the IEE Regulations that the effectiveness of the RCD be verified. This must be achieved by a test simulating an appropriate fault condition and be independent of any test facility incorporated in the RCD. The test currents to be applied are as follows:

Test current	Condition
0.5 x I Δ n	RCD must not trip
1.0 x I Δ n	RCD must trip within 300mS
5.0 x I Δ n	RCD must trip within 40mS

Where I Δ n is the RCD's rated tripping current in accordance with wiring regulations and product standard BS EN 61008.

For time delay RCD 1.0 x I Δ n RCD must trip between 130-500mS.

Industrial 10kA Residual Current Devices (RCDs)

Dimensions (mm)

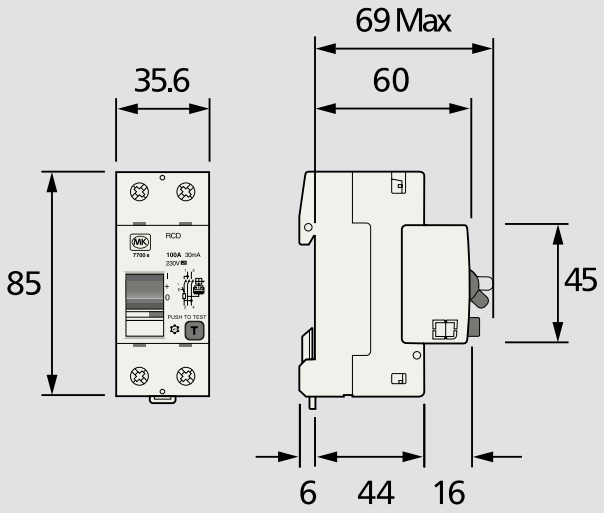

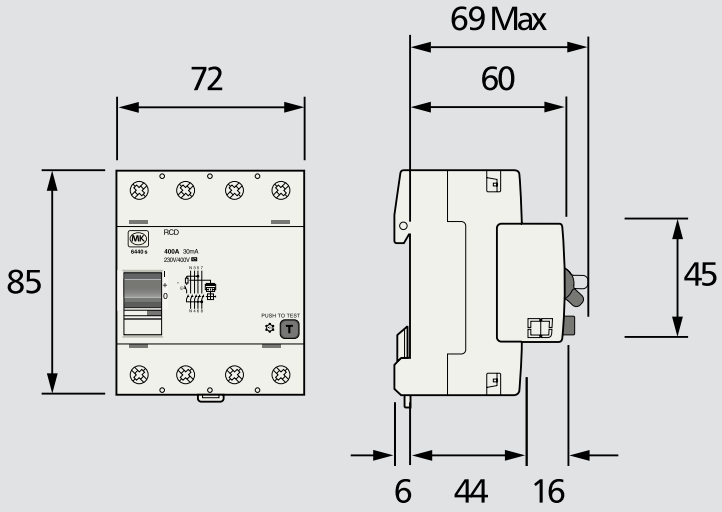

Sentry Technical

Contactors

Standards and approvals

All Sentry contactors in the range are designed to fully comply with BS EN 61095

RATING SPECIFICATION		
TYPE	WIDTH	LIST NO.
20A, double pole	1 module	6220s
20A, four pole	3 module	6420s
40A, four pole	3 module	7440s
63A, four pole	3 module	7463s

Description

Sentry contactors provide a method of remotely switching single and three phase loads. In this regard, they are particularly useful for switching heating, lighting and ventilation circuits, in particular when used in conjunction with REC supply off-peak tariffs.

They are suitable for mounting on a standard DIN rail and are therefore fully compatible with all Sentry Consumer Units and small enclosures. (5704s, 5702s.)

Functions

CONTROL

Achieved by energising and de-energising the contactor coil, via an MK Time Switch or REC meter during 'off peak' hours as set by supply authorities. A coil status indicator is visible through the small window on the front of the contactor.

Contactors

TECHNICAL SPECIFICATION

All Contactor List Nos. are designed to operate at either 20, 40 or 63 amps continuous current (AC1-AC7b) 50Hz and have a mechanical life of 1,000,000 operations.

The coil voltages are 220/240V 50Hz.

LIST NO.	6220S	6420S	7440S	7463S
DESCRIPTION	CONTACTOR			
Contactor rating (Ith)	20A	20A	40A	63A
Includes manual override?	No	No	No	No
No. of poles (normally open only)	2	4	4	4
Width in 18mm modules	1	2	3	3
Rated Voltage (V) (i) Insulation (Ui) (ii) Max. operating (Ue)	400 250	500 415	500 415	500 415
Average consumption of – inrush control circuit coil (VA) – closed	15 3.8	34 4.6	53 6.5	53 6.5
Terminal cable capacity (max.) Controls	2 x 2.5mm² flexible 2 x 1.5mm² rigid			
Power	2 x 2.5mm² flexible 2 x 6mm² rigid		2 x 4mm² flexible 2 x 25mm² rigid	
Torque for terminals	1.2Nm		2.0Nm	

Installation

a) When a contactor is mounted alongside an MCB of greater than 10 amp current rating, or two contactors are mounted alongside an MCB of any current rating, it is advisable to insert a module blank between them. (List No. 5544s.)

b) When mounting more than two contactors side by side, it is necessary to insert a module blank between every two contactors, to give ventilation.

c) When using dual rail consumer units, it is advisable to mount electronic products on the lower rail and contactors on the upper rail. If mounting in a single rail consumer unit, it is advisable to mount electronic products as far away as possible from contactors. As a minimum they should be spaced by a single module width blank.

d) Ensure the load to be controlled is protected against short circuit and overload conditions by a suitable rated Sentry MCB.

e) Contactors are mounted into Sentry Consumer Units and enclosures, by clipping onto the DIN rail mounted in the base by means of the spring clip. If the contactor is required to be removed for any reason, unclip the contactor from the DIN rail by means of the spring clip on the contactor.

FEATURES

- Compatible with all Sentry Consumer Units (single phase only) (excludes 5502s) and the following Sentry enclosures: 5504s, 5604s, 5704s, 5702s (for single and three phase)
- Suitable for heating, lighting and ventilation circuits
- Choice of functions
- Ideal for use with REC supply off-peak tariffs

Sentry Technical

Contactors

Terminal Layout

i) Contactor

a) The coil connections to control energisation should be made between terminals A1 and A2

b) One normally open main contact is between terminals 1 and 2

c) A second normally open main contact is between terminals 3 and 4

d) In the case of four pole contactors, the other main contacts are between terminals 5 and 6, and 7 and 8 respectively

Typical schematic layouts of modular contactors

Without Manual Override

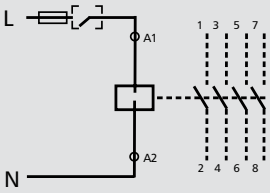

Contactors

Applications and Maximum Ratings

LIGHTING – Maximum number of lamps

Presentation of installations according to type of supply.

The maximum number of lamps which can be operated per phase is equal to the total number of lamps in the "Single-Phase 230V" table.

Single-phase circuit, 230V

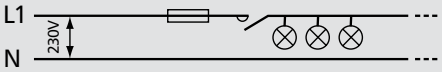

3-phase circuit, 400V (with neutral)

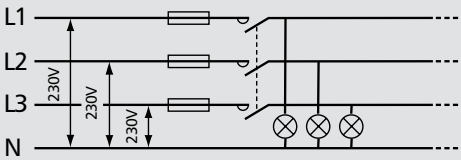

SINGLE-PHASE 230V TABLE						
TYPE OF LIGHTING APPLICATION (AC5A AND AC5B CATEGORIES)	6220S/6420S/ MAXIMUM NO. OF LAMPS		7440S MAXIMUM NO. OF LAMPS		7263S MAXIMUM NO. OF LAMPS	
INCANDESCENT AND HALOGEN LAMPS						
40W	57		115		172	
60W	45		85		125	
100W	28		70		100	
HALOGEN LAMPS USED WITH TRANSFORMER						
60W	14		27		40	
80W	12		23		35	
FLUORESCENT LAMP WITH STARTER (SINGLE FITTING WITH PARALLEL CORRECTION)						
15W	20		40		60	
20W	20		40		60	
40W	20		40		60	
FLUORESCENT LAMP WITH STARTER (SINGLE FITTING NON-CORRECTED)						
15W	30		70		100	
20W	30		70		100	
40W	28		70		100	
ELECTRONIC BALLAST (FLUORESCENT LAMP SINGLE SETTING)						
18W	111		222		333	
36W	58		117		176	
ELECTRONIC COMPACT LAMP (LOW CONSUMPTION)						
7W	200		400		600	
11W	120		240		360	
15W	88		176		264	
20W	66		132		200	
MOTORS – MAXIMUM POWER TYPE OF SMALL MOTOR APPLICATION (AC1 – AC7A CATEGORIES)						
220/240V single phase with capacitor 400V three phase motor	1.2kW 3.2kW		5.5kW 12.5kW		8.5kW 15kW	
HEATING – MAXIMUM POWER TYPE OF SMALL HEATING APPLICATION (AC7B CATEGORY)						
NUMBER OF OPERATING CYCLES	**230V SINGLE PH**	**400V 3 PH**	**230V SINGLE PH**	**400V 3 PH**	**230V SINGLE PH**	**400V 3 PH**
100,000	5.4kW	16kW	8.6kW	26kW	13.6kW	41kW
150,000	4.6kW	14kW	7.4kW	22kW	11.6kW	35kW
200,000	3.5kW	10kW	5.6kW	17kW	8.8kW	26.5kW
500,000	1.6kW	5kW	2.6kW	7.5kW	4kW	12kW
1,000,000	1.2kW	3.5kW	1.9kW	6kW	3kW	9kW
ELECTRICAL ENDURANCE						
AC1 and AC7a categories	250,000 operations					

Sentry Technical

Contactors

Dimensions (mm)

6220s

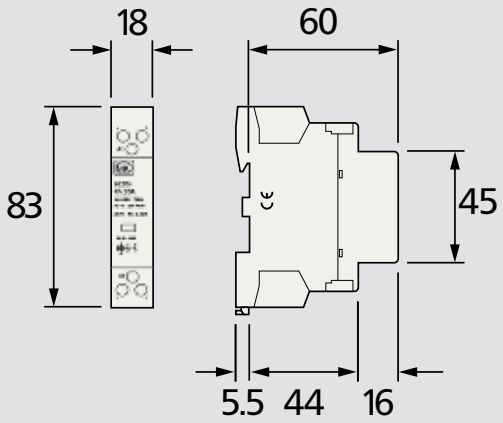

6420s

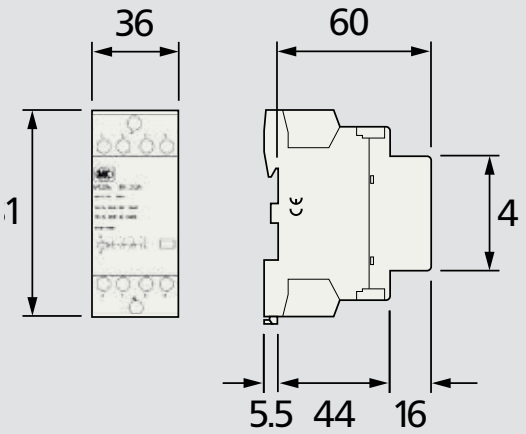

7440s/7463s

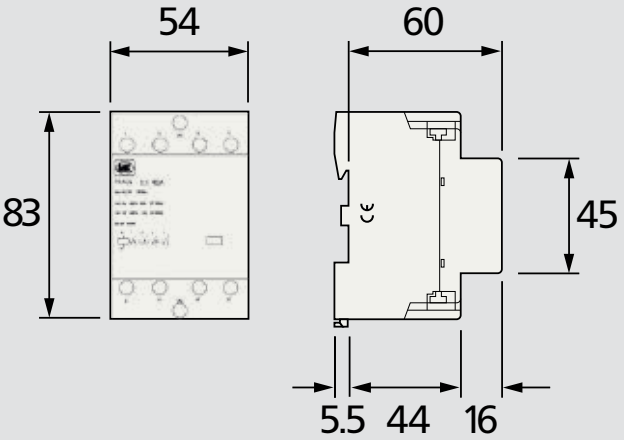

Bell Transformer

Standards and approvals

The Sentry Bell Transformer is designed to comply fully with the requirements of EN 60558-2-8.

TECHNICAL SPECIFICATION

ELECTRICAL

PRIMARY VOLTAGE
220V/240V a.c. 50Hz

SECONDARY VOLTAGE
8V a.c.

RATED OUTPUT CURRENT
1A

PHYSICAL

WIDTH
2 modules (36mm)

TERMINAL CAPACITY
1 x 2.5mm²

AMBIENT OPERATING TEMP
–5°C to +40°C

IP RATING
Front face IP4X

MAX. INSTALLATION ALTITUDE
2000 metres

Description

The Bell Transformer is of the safety isolating, fail safe type. The construction is all insulated, Class II.

It may be mounted within a Sentry Consumer Unit within 2 or 4 module enclosures alongside MCBs, RCDs and RCBOs or surface mounted.

Installation

The Sentry Bell Transformer should always be connected in series with an MCB or other type of protective device of rating not exceeding 6A.

When installed in a 230V environment, i.e. inside a consumer unit, the cables used to connect the bell or chime to the transformer must have a 230V rated voltage. If bell wire is used, suitable sleeving must be provided to increase its insulation rating to 230V.

Dimensions (mm)

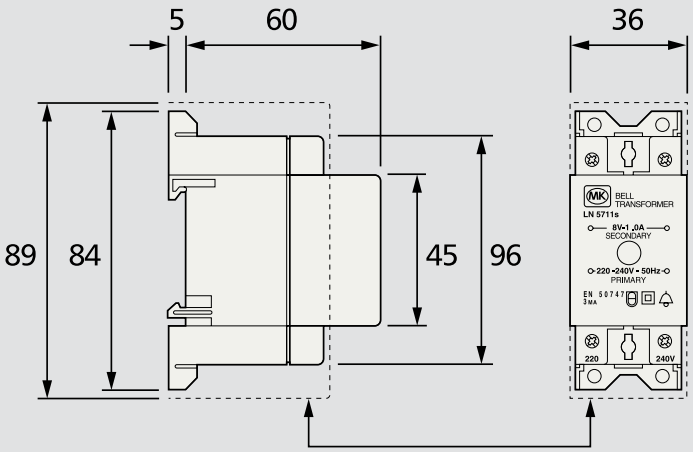

Terminal Covers (supplied fitted)

Sentry Technical

Electromechanical & Digital Timeswitches

Standards and approvals

EN 60730-1, EN 60730-2-7

FEATURES

- Ideal for independent programmable control of lighting, heating and other functions
- Can be mounted in Sentry Consumer Units and appropriate Sentry enclosures, or surface mounted
- Integral resistance to normal electrical interference
- Manual override of programmed commands
- Display indication of switch position for each Channel, i.e. ON or OFF (Digital only)
- Simple summer time to winter time (and vice versa) adjustment facility (Digital only)
- Random and holiday setting programme (5733s only)

Description

Sentry electromechanical and digital timeswitches enable pre-programmed commands to be executed on a given circuit. The Sentry time delay switches can be installed on circuits to energise suitable equipment for between 1 to 7 minutes.

Note: Inductive loads, particularly fluorescent lamps or energy saving lamps, place a heavy stress on the switching contacts. If in doubt about the ability of the timeswitches to directly switch a particular load it is advisable to install the timeswitch in conjunction with a suitable relay or contactor. If in doubt please consult the Technical Sales and Service Department for assistance.

Electromechanical

All Sentry electromechanical timeswitches are suitable for DIN rail mounting in Sentry Consumer Units and appropriate Sentry enclosures.

Quartz controlled units (5807s, 5824s) contain a power reserve of 150 hrs for accurate time keeping in the event of a mains failure.

3 module timeswitches have an additional insulated ‘parking’ terminal for earth or other connections.

24 hr units have a minimum switching time of 30 mins and 7 day units 3 hrs.

Digital

All Sentry digital timeswitches are suitable for DIN rail mounting in Sentry Consumer Units and 2 and 4 module Sentry enclosures.

Sentry digital timeswitches are available in both 1 and 2 module widths.

The 1 channel 1 module digital timeswitch (5733s) provides 50 programming selections, with random and holiday options. A simple summer to winter time (and vice versa) adjustment facility is provided. The timeswitch contains a power reserve of 150 hrs for accurate time keeping in the event of mains failure.

The two module digital timeswitches are available in both one channel (5731s) and 2 channel (5732s) versions. The units are supplied pre-programmed to UK time, and will automatically change from winter to summer time. The integral battery (with a 3 year power reserve) maintains the settings until the mains supply is connected. This feature will allow programming of switching commands prior to installation, if required.

The 1 channel 2 module digital timeswitch (5731s) provides for 20 programming selections.

The 2 channel 2 module digital timeswitch (5732s) provides a facility for independent control of two circuits. A maximum of 20 switching commands can be programmed for each channel.

All digital timeswitches have a minimum programming time of 1 minute and a manual override. Commands can be programmed for individual days or for groups of days.

Sentry Technical

TECHNICAL SPECIFICATION

ELECTROMECHANICAL	5707S	5724S	5833S	5807S	5824S
Supply voltage	220-240V a.c. 50Hz	220-240V a.c. 50Hz	220-240V a.c. 50Hz	220-240V a.c. 50-60Hz	220-240V a.c. 50-60Hz
Maximum power consumption	1VA	1VA	1VA	1VA	1VA
Switching capacity per channel – Resistive – Inductive – Fluorescent	16A 4A (Cos.Ø 0.6) 1350W	16A 4A (Cos.Ø 0.6) 1350W	16A 4A (Cos.Ø 0.6) 1350W	16A 4A (Cos.Ø 0.6) 1350W	16A 4A (Cos.Ø 0.6) 1350W
Switching arrangement	1 x c/o	1 x c/o	1 x n/o	1 x c/o	1 x c/o
No. of switching commands	56	48	48	56	48
Minimum programme time	3hrs	30mins	30mins	3hrs	30mins
Operating temperature range	–25°C to +55°C	–25°C to +55°C	–25°C to +55°C	–20°C to +55°C	–20°C to +55°C
Running reserve	–	–	–	*150hrs	*150hrs
Width of unit	54mm (3 mods)	54mm (3 mods)	18mm (1 mod)	54mm (3 mods)	54mm (3 mods)
Terminal capacity	2 x 2.5mm²	2 x 2.5mm²	2 x 4mm²	2 x 2.5mm²	2 x 2.5mm²

DIGITAL AND TIME DELAY	5731S	5732S	5733S
Supply voltage	220-240V a.c. 50-60Hz	220-240V a.c. 50-60Hz	220-240V a.c. 50-60Hz
Maximum power consumption	5VA	5VA	5VA
Switching capacity per channel – Resistive – Inductive – Fluorescent	16A 8A (Cos.Ø 0.6) 1000W	16A 8A (Cos.Ø 0.6) 1000W	16A 8A (Cos.Ø 0.6) 1000W
Switching arrangement	1 x c/o	2 x c/o	1 x c/o
No. of switching commands	50	50	50
Programme options	–	–	R/H
Minimum programme time	1min	1min	1min
Operating temperature range	-25°C to +55°C	-25°C to +55°C	-25°C to +55°C
Operating accuracy @ 20°C	2.5sec/day	2.5sec/day	2.5sec/day
Running reserve	3 years from factory	3 years from factory	3 years from factory
Width of unit	36mm (2 mods)	36mm (2 mods)	18mm (1 mod)
Terminal capacity	2 x 2.5mm²	2 x 2.5mm²	2 x 4mm²
Summer/winter changeover	Yes	Yes	Yes
Neon indicator lamp load	–	–	–

R/H = Random/holiday C/O = Changeover switch N/O = Normally open contact * = after 140hr charging time

Dimensions (mm)

5707s/5724s/5807s/5824s

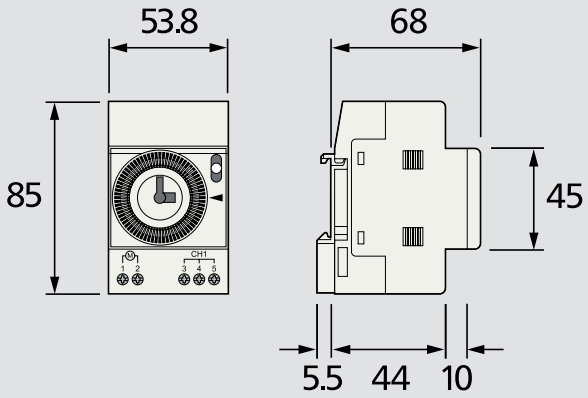

5833s

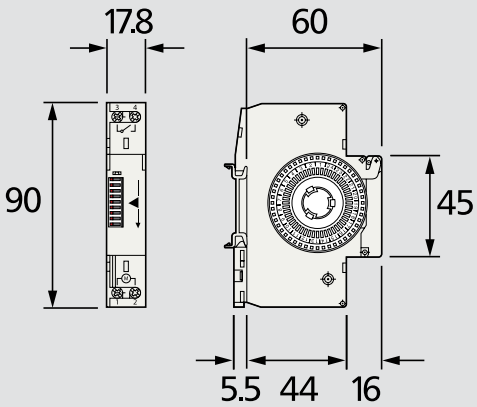

Sentry Technical

Dimensions (mm)

5731s/5732s

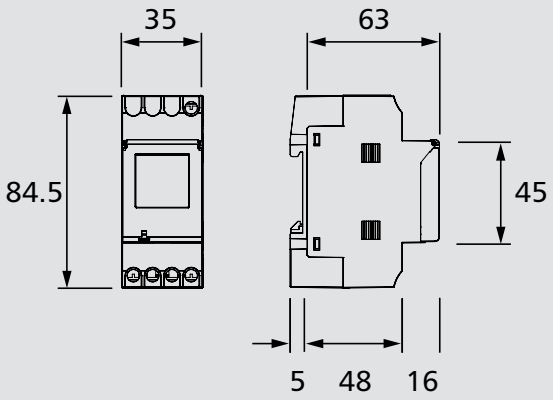

5733s

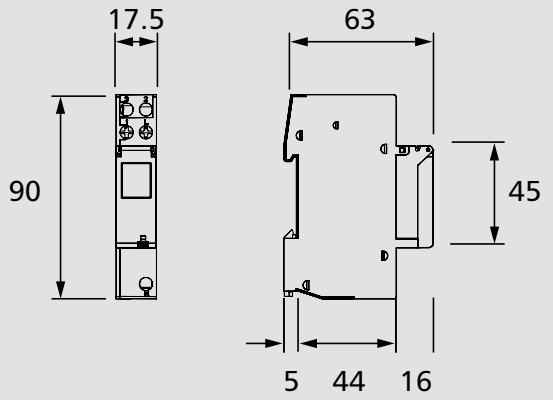

CASE STUDY

THE YORK BUILDING, LONDON

London's West End is renowned architecturally, for its style and sophistication and the York Building is no different.

The development, which occupies an island site close to Marble Arch, is a mix of commercial, retail and residential use. The 22 high quality residential apartments feature the latest and best in hi-tech services and MK was asked to design bespoke combination plates to provide a neat outlet for power and data applications.

The Design team came up with specially-designed in-line combination plates that met both the aesthetic and service requirements for these state of the art living spaces. Available on a worldwide basis, the MK Design Service is supported by a dedicated team to ensure the seamless delivery of your chosen products.

To find out more visit www.mkelectric.co.uk

Sentrysocket® Technical

Sentrysocket

Compliance with EC Directives, Standards and approvals

All Sentrysockets comply with the following EC Directives and are CE marked:

Low Voltage Directive
Electromagnetic Compatibility Directive (89/336/EEC)

Sentrysocket RCD DP Single Sockets comply with the requirements of the following standards:

BS 7288:1990
BS EN 50082-1:1998

Sentrysocket RCD SP Double Sockets also comply with the requirements of BS EN 61543:1996.

TECHNICAL SPECIFICATION

ELECTRICAL

RATED VOLTAGE
240V a.c.

CURRENT RATING
13A resistive
Rated tripping current 10mA/30mA

TERMINAL CAPACITY
3 x 4mm² for 1 gang
2 x 4mm² for 2 gang

PHYSICAL

AMBIENT OPERATING TEMPERATURE
–5°C to +40°C

IP RATING
IP2XD
IP66 (K56301/K56231/K56233)

MAX. INSTALLATION ALTITUDE
2000 metres

Sentrysockets are not suitable for connection across two lines of a 127V line to Neutral Voltage System

Cable management

Logic Plus™, Albany Plus™ and Metalclad Plus™ Sentrysockets can be mounted in a variety of MK trunking systems.

Installation

Flush mounting steel wall box

It should be noted that some of the conduit entries may be restricted, depending upon their positions and the depth of box used.

For a full range of corresponding products, see pages 288-289 in the product selector.

Description

Sentrysocket provides a high level of protection against electrocution and gives further protection when used with appliances vulnerable to insulation damage, particularly when they are in damp environments or outdoors. The Sentrysocket units are not suitable for mounting in damp environments or outdoors.

Sentrysocket, incorporating an RCD, is part of a complete range of fixed and portable wiring devices and circuit protection devices suitable for use in domestic, commercial and light industrial applications.

Active control circuits

Incorporate a 'Re-set' mechanism and are mains failure sensitive, i.e. they will function under all the normal conditions expected of an RCD, but will also trip in the event of a power cut or a sudden, dramatic reduction in mains voltage. This makes them ideal for use where it would be hazardous for equipment to suddenly energise after return of mains power, such as use with rotating machinery and heat developing apparatus.

Passive control circuits

Incorporate a 'Stay-set' mechanism and is mains failure proof, i.e. it will function under all the normal conditions expected of an RCD and will not trip in the event of a power cut. This makes it suitable for use with freezers or in inaccessible or unmanned locations.

FEATURES

- Suitable for most residential, commercial and light industrial applications
- Active and passive control circuit applications
- Flexible and versatile in use
- Single Sockets have double pole switching, double sockets are single pole switching
- Masterseal Plus products are ideal for use with equipment subject to wet weather or high humidity
- Part of a complete range of MK circuit protection devices
- They are a.c. and pulsating d.c. sensitive for residual current
- Double Socket products have an enhanced RF Immunity performance

Sentrysockets products can be wall or bench mounted. Do not mount or use as a trailing socket or where they maybe subject to excessive moisture or dampness.

Dimensions (mm)

Single socket

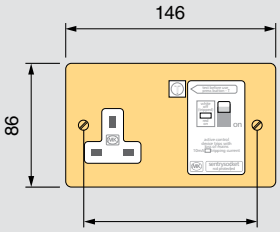

Double socket

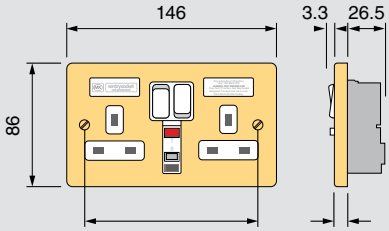

Sentrysocket

Installation

Flush mounting steel wall box

It should be noted that some of the conduit entries may be restricted, depending upon their positions and the depth of box used.

Socket Testing

Single Socket Testing

After installation, turn the mains electricity supply on.

To test that the Sentrysocket is functioning correctly:

1. Ensure that no appliance is connected to the Sentrysocket. **Switch Sentrysocket on**: The switch should remain closed and the red flag will appear in the window. If the switch fails to remain closed, check that the Supply L and N connections are not reversed or the Supply N connection is not open circuit. If the Sentrysocket is correctly connected and still trips after being switched on, the Sentrysocket is faulty and should not be used.
2. If the Sentrysocket stays on, **press the test button**: The switch will open and the white flag will appear In the window. If the Sentrysocket does not trip and there is mains voltage present at the socket outlet, Sentrysocket is faulty and should not be used.
3. **Switch Sentrysocket on**: Connect an RCD tester and ensure that the Sentrysocket trips within the specified time:
   ≤ 200 ms AT RATED TRIP CURRENT
   ≤ 40 ms AT 5 x RATED TRIP CURRENT

   If the Sentrysocket does not trip within the specified times then the product is faulty and should not be used (If more than one RCD is in series then there is no guarantee as to which device will trip first).
4. **Reset all tripped RCD's including the Sentrysocket**.
5. **Switch off the mains supply switch disconnector**. On mains failure, a Sentrysocket with Active Control Circuit will trip, whilst a Sentrysocket with Passive Control Circuit will not trip. If the Active Control device does not trip, it is faulty and should not be used – see note below. If no faults have been found then installation testing has been completed successfully.

Note: If a fault is identified at any stage of installation testing procedure do not use Sentrysocket, and contact your local electrician, or your local MK stockist.

Double Socket Testing

After installation, turn the mains electricity supply on.

To test that the Sentrysocket is functioning correctly follow the steps 1 to 4 below:

1. Ensure that no appliance is connected to the Sentrysocket.
2. **Reset** – Press the button marked R (for Reset) – the contact status indicator should show red, indicating that the socket outlets are now live (if the switches are in the ON positions).
3. **Test** – Press the TEST button marked T (for Test), the product should trip with the contact status indicator showing black. In this state the socket outlets are disconnected from the supply.
4. **Reset** – Press the button marked R again, the contact status indicator should show red.
5. Connect an RCD Tester to either socket outlet and ensure that the Sentrysocket trips with the specified times below:
   ≤ 200 ms AT RATED TRIP CURRENT
   ≤ 40 ms AT 5 x RATED TRIP CURRENT
6. Reset the Sentrysocket as in step 2 above.
7. Switch off the Mains Supply Switch Disconnector.
8. A Sentrysocket with Active Control Circuit should trip while a Sentrysocket with Passive Control Circuit should not trip.

If all the operations in steps 2 to 8 above give correct results, the Sentrysocket RCD socket outlet is safe to use.

If the procedures in steps 2 to 8 above are not completed correctly, do not use the Sentrysocket product and seek professional advice or contact the MK Technical Sales and Service department on +44 (0)1268 563720.

Cable Management Technical

Range	Technical Data
Perimeter and Distribution	
Cable Management Introduction	610-611
Prestige 3D Dado and Skirting Three compartment dado trunking system for compliance with Cat 6 structured cabling	612-615
Prestige 3D Antibac Blue Antibacterial solution for power and data distribution in environments where hygeine is priority	616
Prestige 3D Compact 3 compartment trunking with a smaller footprint for more confined installations	617-621
Prestige 2com Two compartments provide maximum data capacity around radiused bends	623-629
Prestige Poles and Posts Poles and Posts for supplying multi-services to work stations	630-631
Powerlink Plus Busbar trunking system with flush fitting accessories	632-639
Pinnacle Versatile angular bench trunking system	640-644
Premier Integrated trunking system with snap fit mouldings	645-649
Norwich Durable and popular trunking system	650-654
Ega Industrial Heavy duty trunking in a variety of sizes	656-661
Ega Cornice Trunking for wall/ceiling junctions	662-666

Cable Management Technical

Range	Technical Data
Conduit and Mini	
Egatube Conduit High impact conduit with a comprehensive range of fittings	667-671
Ega Mini Trunking and Red Alert Wide selection of mini trunking profiles and fittings	672-674

Cable Management Technical

Material Specification

PVCu

PVCu is used for the production of extrusions and mouldings and is universally accepted as having the most suitable properties for use within the electrical industry.

Standards and Approvals

All MK PVCu products are manufactured in accordance with the requirements of BS EN 50085 Series, BS 4678: Part 4, BS EN 61386 Series and BS 4662. The PVCu material used has been tested by an approved laboratory in accordance with the requirements of the following British Standards: BS 4607: Part 1, BS 476: Part 7. Copies of test certificates are available upon request. MK has been awarded ISO 9001: 2008 accreditation. The system complies with all relevant requirements of BS 7671:2008.

CE marking

All relevant MK products in this brochure are CE marked, confirmation that they meet the EMC and LV directives.

Performance

Strength	Impact resistance	High impact resistance under normal climatic conditions, BS 4678: medium duty	
	Charpy notched impact strength		25 kJ/m^2
	Tensile strength	at yield at break	34.62 N/mm^2 42.00 N/mm^2

Fire performance

The PVC-U materials used in the manufacture of MK products are non-flame propagating in accordance with BS EN 61386, BS EN 50085 and BS 4678. Extrusion material has been tested by an accredited laboratory in accordance with the requirements of BS 476: Part 7 and has achieved a Class 1Y classification. Moulding material has been tested by an accredited laboratory and conforms with IEC 695-2-1 at a severity of 650°C.

Thermal properties

All MK PVCu products are designed to accommodate local thermal expansion. Fitting instructions explain the procedure required to deal with the differential movement at the interface with the building fabric.

Coefficient of linear expansion	55 x 10^{-6}/°C (5mm/3000mm with a temperature rise of 25°C)
Operating temperatures	-5° to 60°C
Vicat softening point	81°C
Thermal conductivity	0.19w/mk

Chemical resistance

PVCu is non-corrosive and not affected by sea water. It has excellent resistance to mineral acids, alkalis and detergents, good resistance to alcohols, but liable to attack from solvents such as keytones, aromatics and hydrocarbons.

Electrical

PVCu is non-conductive.

Dielectric strength	40 kV/mm in DBP
	17 kV/mm in tx oil
Resistivity	1014 Ω ohm

Biological

Resistant to vermin and termites.

Workability

All MK PVCu products are lightweight and can be readily cut and drilled with hand tools. Short component lengths can be readily incorporated, reducing wastage of material. All covers and accessories are manufactured to fine tolerances to ensure a tight fit with ease of removal. Stop ends are secured to the carriers. For details, see the relevant installation guide.

Durability

All MK PVCu products are stable and will maintain their performance characteristics in accordance with the terms and conditions described above.

Maintenance

Clip-on covers with optional screw fix and interchangeable accessories provide continuous accessibility for rewiring, extensions and modifications to an installation. Covers and accessories can be cleaned with a damp cloth and household detergent. The surface can be decorated with commercial paints if required

Mechanical performance

Impact resistance at -5°C, BS EN 50085: medium duty for trunking, BS EN 61386 heavy or medium, where relevant for conduits.

Aluminium

Standards and approvals

The Prestige 3D Aluminium System is manufactured in accordance with the requirements of BS EN 50085-1:2005 and BS EN 50085-2-1:2006. 1, 2 & 3 Gang Boxes conforming to BS 4662 where applicable.

IEE Wiring Regulations

All products are designed and manufactured to allow installation to comply with all relevant requirements of the latest edition of BS 7671:2008.

Quality Assurance

The system is manufactured to BS EN ISO 9001:2008

Earth Continuity

The system makes provision for earth bonding where required in accordance with BS 7671:2008.

When PVC cable trunking items are used that interrupt the earth continuity, Earth Kits (VP218 & VP219) are required to ensure continuity.

Impact Classification

Composite trunking systems (PVC / Al) will withstand “medium” impact to BS EN 50085. Metal components will withstand “heavy” impact as defined in BS EN 50085.

Thermal Properties

Min/Max installation and application temperature –5 to +60°C.

Coefficient of linear expansion 23 x 10-6 per°C.

1mm/m for 40 degree rise.

Maintenance

Resistant to staining. Wipe with soapy water (neutral 5/7 ph value).

Electrical Properties

Resistance to 0.03 ohm mm^2/m.

Chemical Properties

Corrosion only occurs, to any extent, when ph value is less than 3 or greater than 9.

PVCu Chemical Resistance Table

The resistance of unplasticised PVC to a wide range of chemicals is listed in the table below.

The symbols used to denote performance are as follows:

- ▲ Satisfactory
- ● Some attack or absorption: the material may be considered for use when alternative materials are unsatisfactory and where limited life is acceptable. When PVC is to be used with such chemicals full scale trials under realistic conditions are necessary.
- ■ Unsatisfactory: so rated because of decomposition, solution, swelling, loss of ductility etc, of the samples tested.

For clarification and for details of resistance to other chemicals please call our Technical Hotline on +44 (0)1268 563720.

Note: to determine the suitability of PVCu for external applications we strongly advise you contact the MK Technical Sales and Service Department on +44 (0)1268 563720.

CHEMICAL	CONCENTRATION	UNPLASTICISED PVC 20°C	UNPLASTICISED PVC 60°C
acetaldehyde	40% aq. solution	▲	■
acetic acid	60% aq. solution	▲	■
acetic anhydride		■	■
acetone	Traces	■	■
alcohol, ethyl	40% w/w water	▲	●
alcohol, isopropyl		▲	▲
alcohol, menthyl	6% aq. solution	▲	▲
	100%	▲	●
aliphatic hydrocarbons		▲	▲
aluminium chloride		▲	▲
aluminium hydroxide		▲	▲
ammonia	0,88S.G., aq. solution	▲	▲
	Anhydrous gas	■	■
	Anhydrous liquid	■	■
ammonium chloride		▲	▲
ammonium hydroxide		▲	▲
aniline		■	■
animal oils		▲	▲
aqua regia	Dilute	▲	▲
	Concentrated	▲	■
barium sulphate		▲	▲
beer		▲	
benzine		■	■
benzoyl chloride		■	■
borax		▲	▲
boric acid		▲	▲
brine		▲	▲
bromide	Traces, gas	●	■
	100% (dry gas)	■	■
	Liquid	■	■
calcium chloride	aq. solution	▲	▲
	20% in methyl alcohol	▲	
calcium hydroxide		▲	▲
calcium hypochlorite		▲	▲
carbon dioxide		▲	▲
carbonic acid		▲	▲
carbon monoxide		▲	▲
carbon tetrachloride		●	■
castor oil		▲	
chloric acid		▲	
chlorine	100% (dry gas)	▲	●
	10% (moist gas)	●	
chlorine water	Sat. solution	●	●
chloroform		■	■
chrome allum		▲	▲
chromic acid	Plating solution	▲	▲
cider		▲	
citric acid		▲	▲
copper chloride		▲	▲
copper cyanide		▲	▲
copper nitrate		▲	▲
copper sulphate		▲	▲
cupric sulphate		▲	▲
cyclohexanone		■	■
detergent, synthetic	All concentrations	▲	▲
developers, photographic		▲	▲
dextrin		▲	▲
dextrose		▲	▲
diazo salts		▲	▲
dichlorodifluoromethane		▲	
diethyl ether		■	■
emulsifiers	All concentrations	▲	▲
emulsions, photographic		▲	▲
ethyl acetate		■	■
ethylene glycol		▲	▲
ethylene oxide		■	■
fatty acids		▲	▲
ferric chloride		▲	▲
ferric nitrate		▲	▲
ferric sulphate		▲	▲
ferrous ammonium citrate		▲	▲
ferrous chloride		▲	▲
ferrous sulphate		▲	▲
fixing solution, photographic		▲	▲
fluorine		●	●
formaldehyde	40% w/w water	▲	▲
formic acid	50% solution	▲	▲
	100% solution	▲	■
fructose		▲	▲
fruit pulp		▲	▲
glucose		▲	▲
glycerol		▲	▲
grape sugar		▲	▲
heptane		▲	▲
hydrobromic acid	100%	▲	▲
hydrochloric acid	22% aq. solution	▲	▲
	Concentrated	▲	▲
hydrochloric acid	40% aq. solution	▲	●
	60% aq. solution	●	■
	Concentrated		
hydrogen bromide	Anhydrous	▲	▲
hydrogen chloride	Anhydrous	▲	▲
hydrogen flouride	Anhydrous	▲	▲
hydrogen peroxide	3% (10vol)	▲	▲
	12% (40vol)	▲	▲
	30% (100vol)	▲	▲
	90% and above	▲	
hydrogen sulphide		▲	▲
iodine	Solution in potassium iodine	■	■
lactic acid	10% aq. solution	▲	▲
	100%	●	●
lanoline		▲	▲
linoletic acid		▲	▲
linseed oil		▲	▲
magnesium hydroxide		▲	▲
maleic acid	50% aq. solution	▲	
	Concentrated	▲	●
metallic soaps (water soluble)		▲	▲
methyl bromide		■	■
methyl chloride		■	■
methyl cyclohexanone		■	■
methyl ethyl ketone		■	■
methyl isobutyl ketone		■	■
methylated spirit		▲	
methylene chloride		■	■
milk		▲	▲
mineral oil		▲	▲
mixed acids (sulphuric/nitric Various proportions)		●	■
molasses		▲	▲
naphtha		▲	▲
naphtalene		■	■
nicotine		▲	▲
nitric acid	5% aq. solution	▲	
	50% aq. solution	▲	●
nitrobenzene		■	■
oleic acid		▲	▲
oxalic acid		▲	▲
oxygen		▲	▲
ozone		▲	▲
paraffin		▲	▲
pentane		▲	▲
petrol		▲	▲
phosphoric acid	30% aq. solution	▲	▲
	95% aq. solution	▲	▲
photographic developers		▲	▲
potassium bromide		▲	▲
potassium carbonate		▲	▲
potassium cyanide		▲	▲
potassium ferricyanide		▲	▲
potassium hydroxide	10% aq. solution	▲	▲
	Concentrated	▲	▲
potassium hypochlorite		▲	▲
potassium permanganate		▲	▲
propane		▲	▲
propylene glycol		▲	▲
propylene oxide		■	■
saccharose		▲	▲
sea water		▲	▲
silver nitrate		▲	▲
soap solution		▲	▲
sodium bicarbonate		▲	▲
sodium bisulphate		▲	▲
sodium borate		▲	▲
sodium bromide		▲	▲
sodium carbonate		▲	▲
sodium chlorate		▲	▲
sodium chloride		▲	▲
sodium cyanide		▲	▲
sodium ferricyanide		▲	▲
sodium ferrocyanide		▲	▲
sodium fluoride		▲	▲
sodium hydroxide	40% aq. solution	▲	▲
	Concentrated	▲	▲
sodium hypochlorite 15% Cl		▲	▲
sodium hyposulphate		▲	▲
sodium nitrate		▲	▲
sodium peroxide		▲	▲
sodium silicate		▲	▲
sodium sulphate		▲	▲
sodium sulphide	25% aq. solution	▲	▲
	sodium sulphite	▲	▲
soft soap		▲	▲
surface active agents (All concentrations) (emulsifiers, synthetic detergents and wetting agents)		▲	▲
starch		▲	▲
stearic acid		▲	▲
sucrose		▲	▲
sulphur	Colloidal	▲	▲
sulphur dioxide	Dry	▲	▲
	Liquid	●	■
sulphuric acid	80% aq. solution	▲	▲
	90% aq. solution	▲	●
	Fuming	■	■
sulphurous acid	10% aq. solution	▲	▲
tallow		▲	▲
tanning extracts		▲	▲
tartaric acid		▲	▲
transformer oil		▲	▲
trichloroethane		■	■
trichloroethylene		■	■
turpentine		▲	▲
vegetable oils		▲	▲
vinegar		▲	▲
water		▲	▲
wetting agents	All concentrations	▲	▲
wines and spirits		▲	
xylene		■	■
zinc carbonate		▲	▲
zinc chloride		▲	▲
zinc sulphide		▲	▲

Prestige 3D Technical – Dado & Skirting

Data Trunking System

Standards and Approvals

The Prestige 3D System is manufactured in accordance with the requirements of BS EN 50085-1:2005 and BS 4662:2006. Copies of test certificates are available upon request. The system complies with all the relevant requirements of BS 7671:2008. MK has been awarded ISO 9002 accreditation.

TECHNICAL SPECIFICATION

CE MARKING
All relevant MK products in this brochure are CE marked, confirmation that they meet the EMC and LV directives.

MANUFACTURE
All trunking components are manufactured from PVCu.

APPEARANCE
Prestige 3D is manufactured in white. The trunking surface can be painted, if required, after installation. Antibac Blue must not be painted or otherwise coated.

PERFORMANCE

IMPACT	
MINIMUM STORAGE TEMPERATURE	-5ºC
MINIMUM INSTALLATION TEMPERATURE	-5ºC
MAXIMUM APPLICATION TEMPERATURE	+60ºC

FIRE PERFORMANCE
The PVCu materials used in the manufacture of MK products are non-flame propagating in accordance with BS EN 50085-1: 2005. Extrusion material has achieved classification 1Y in accordance with BS 476- 7. Moulding material has achieved 650ºC glow wire rating in accordance with BS EN 60695-2-11: 2001.

THERMAL PROPERTIES
Prestige 3D trunking is designed to accommodate local thermal expansion. Fitting instructions explain the procedure required to deal with the differential movement at the interface with the building fabric. Linear Expansion: 4mm over every 3000mm with a temperature rise of 25ºC.

CHEMICAL RESISTANCE
The PVCu materials used are non-corrosive and not affected by seawater. It has excellent resistance to mineral acids, alkalis and detergents, good resistance to alcohols, but is liable to attack from solvents such as ketones, aromatics and hydrocarbons. See PVCu Chemical Resistance table on Page 611 for more information.

ELECTRICAL

PRESTIGE 3D TRUNKING IS NON-CONDUCTIVE	
DIELECTRIC STRENGTH	40 kV/mm in DBP
	17 kV/mm in tx oil
RESISTIVITY	1014 Ω cm

BIOLOGICAL
Prestige 3D trunking is resistant to vermin and termites.

WORKABILITY
Prestige 3D trunking is lightweight and can readily be cut and drilled to suit installation needs with hand tools.

DURABILITY
Prestige 3D trunking is stable and will maintain its performance characteristics in accordance with the terms and conditions described above.

MAINTENANCE
Clip-on covers with optional screw fix and interchangeable accessories provide continuous accessibility for rewiring, extensions and modifications to an installation. Covers and accessories can be cleaned with water and household detergent. The surface can be decorated with commercial paints if required.*Classifications to BS EN 50085-1:2005 and BS EN 50085-2-1:2006 available on request.

Description

Prestige 3D is the new three compartment dado, skirting and compact trunking from MK that satisfies the growing data demands of cable management installations. As well as providing greater depth for larger cable capacity, Prestige 3D is rich in new features, offering installation benefits and improved cable management. Prestige 3D is Cat 5e, 6 and 7 compliant, with the new Data Sweep, Flat Angles and Tees, all allowing continuous cable capacity.

FEATURES

- Greater trunking depth, increased data and power cable capacity, accepts 45mm deep back boxes
- Patented Cat 5e, 6 and 7 compliant Data Sweep, with no loss of capacity and without the need for bulbous, protruding corner covers
- Cat 5e, 6 and 7 compliant moulded flexible Internal and External Corners, moulded Flat Angles and Tees
- Divider Knockouts, making wiring easier and faster with no drilling or cutting
- Patented two stage Hinge Lids enables cables to be supported by the trunking cover during installation, and makes retro-installation of additional cables more simple
- All extrusions manufactured from 100% recycled material*

Prestige Antibac Blue

An antibacterial cable management solution for power and data distribution in environments where hygiene is a prioty.

Prestige Compact

A Dado system which has a smaller footprint and offers a solution for confined locations, such as between radiators and window sills.

* Based on 2014 consumption

For a full range of corresponding products, see pages 290-303 in the product selector.

Prestige 3D Technical – Dado & Skirting

Data Trunking System

Dimensions (mm)

Profiles

Compartment CSA mm²

1 = 1763
2 = 3828
3 = 1952

Assembly

Dado = 1.58 kg/m
Skirting = 1.60 kg/m

Wall Thickness

VP100 = 1.7mm
VP110 = 1.7mm
VP115 = 1.7mm
VP180 = 2.0mm

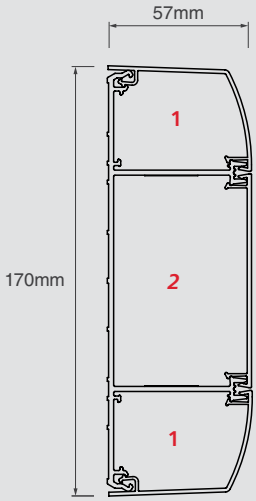

Dado

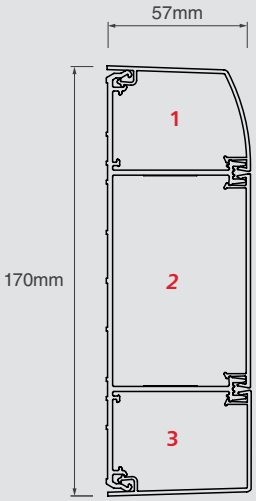

Skirting

Component Selection Guide

Dado

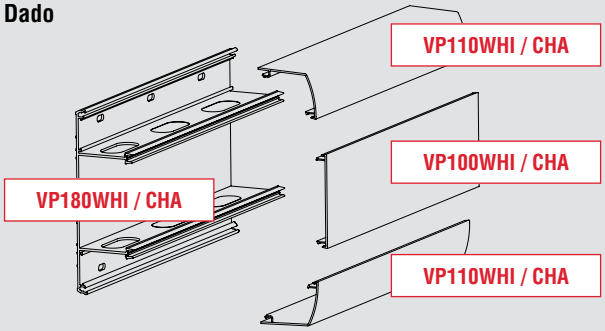

Skirting

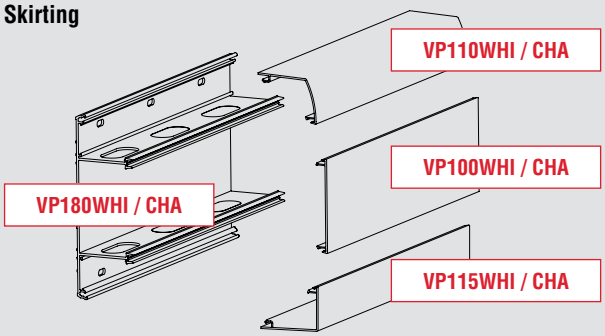

CABLE CAPACITY

TYPE OF CONDUCTOR	SIZE	CABLE FACTOR	COMPARTMENT 1		COMPARTMENT 2		COMPARTMENT 2 WITH 45MM DEEP BOX		COMPARTMENT 3	
			FULL TERM CSA (MM²)							
			1763		3828		610		1952	
			TERM AT 45% FILL (MM²)							
			793		1722		274		878	
POWER CABLES			NUMBER OF CABLES AT 45% FILL							
PVC stranded	1.5mm²	8.6	92		200		31		102	
	2.5mm²	12.6	62		136		21		69	
	4mm²	16.6	47		103		16		52	
	6mm²	21.2	37		81		12		41	
DATA CABLES			NUMBER OF CABLES AT 45% FILL (A) AND FULL CAPACITY (B)							
			A	B	A	B	A	B	A	B
Cat 5E UTP	5.5mm dia.	30.2	26	58	57	126	9	20	29	64
Cat 5E STP	6.0mm dia.	36.0	22	48	47	106	7	16	24	54
Cat 6 UTP	6.5mm dia.	42.2	18	41	40	90	6	14	20	46
Cat 6 STP	7.0mm dia.	49.0	16	35	35	78	5	12	17	39
Cat6a	8.0mm dia	64.0	12	27	26	59	4	9	13	30
Cat 7	8.0mm dia	64.0	12	27	26	59	4	9	13	30

Prestige 3D Technical – Dado & Skirting

Data Trunking System

Component Selection Guide

END CAP
DADO – VP183WHI / CHA
SKIRTING – VP193WHI / CHA

INTERNAL CORNER
DADO – VP181WHI / CHA
SKIRTING – VP191WHI / CHA

FLAT ANGLE UP
DADO – VP185WHI / CHA
SKIRTING – VP195WHI / CHA

FLAT ANGLE DOWN
DADO – VP185WHI / CHA
SKIRTING – VP196WHI / CHA*

*This item is fabricated rather than moulded

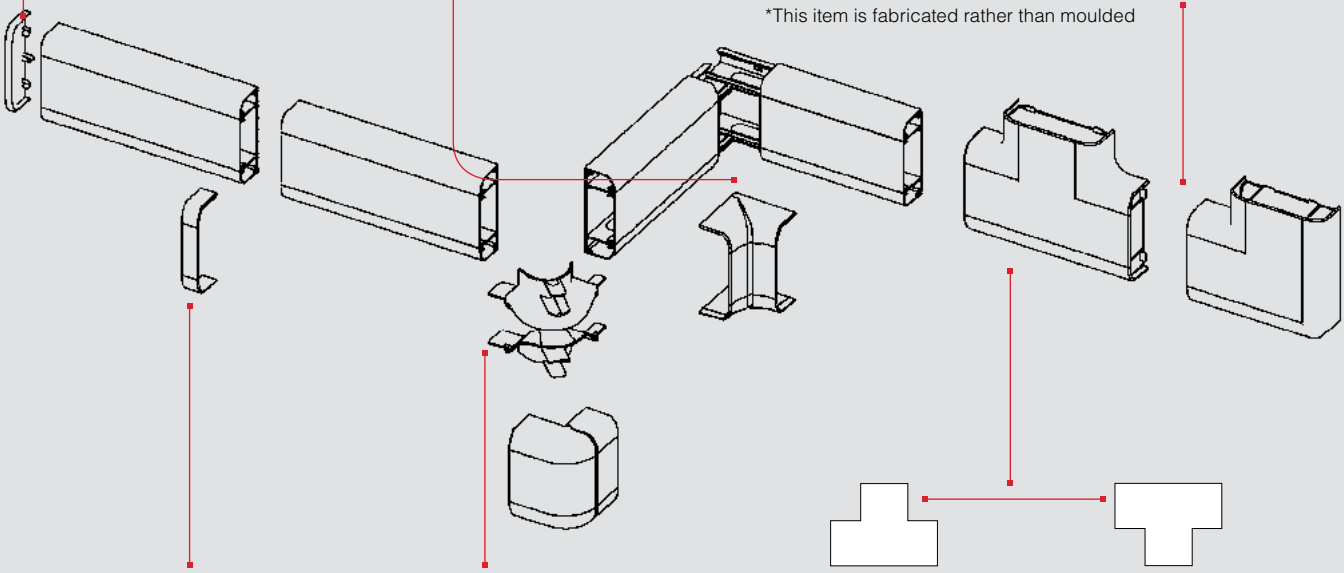

JOINT COVER
DADO – VP184WHI / CHA
SKIRTING – VP194WHI / CHA

EXTERNAL CORNER
DADO – VP182WHI / CHA
SKIRTING – VP192WHI / CHA

FLAT TEE UP
DADO – VP187WHI / CHA
SKIRTING – VP197WHI / CHA

FLAT TEE DOWN
DADO – VP187WHI / CHA

Flat Angles and Tees

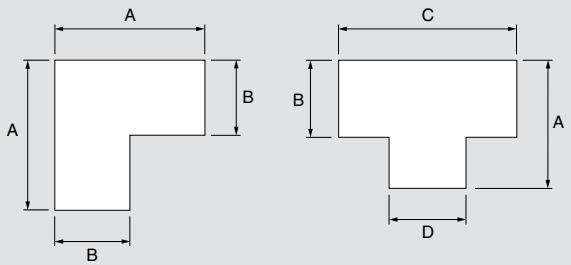

FLAT ANGLES AND TEES DIMENSIONS (MM)

LIST NO	DESCRIPTION	A	B	C	D
VP185WHI / CHA	Flat Angle	218mm	170mm		
VP187WHI / CHA	Flat Tee	202mm	170mm	235mm	170mm
VP195WHI / CHA	Flat Angle Up	218mm	170mm		
VP196WHI / CHA	Flat Angle Down	270mm	170mm		
VP197WHI / CHA	Flat Tee Up	202mm	170mm	235mm	170mm

Prestige 3D Technical – Dado & Skirting

Installing Prestige 3D

Figure shows minimum distance required for installing around corners

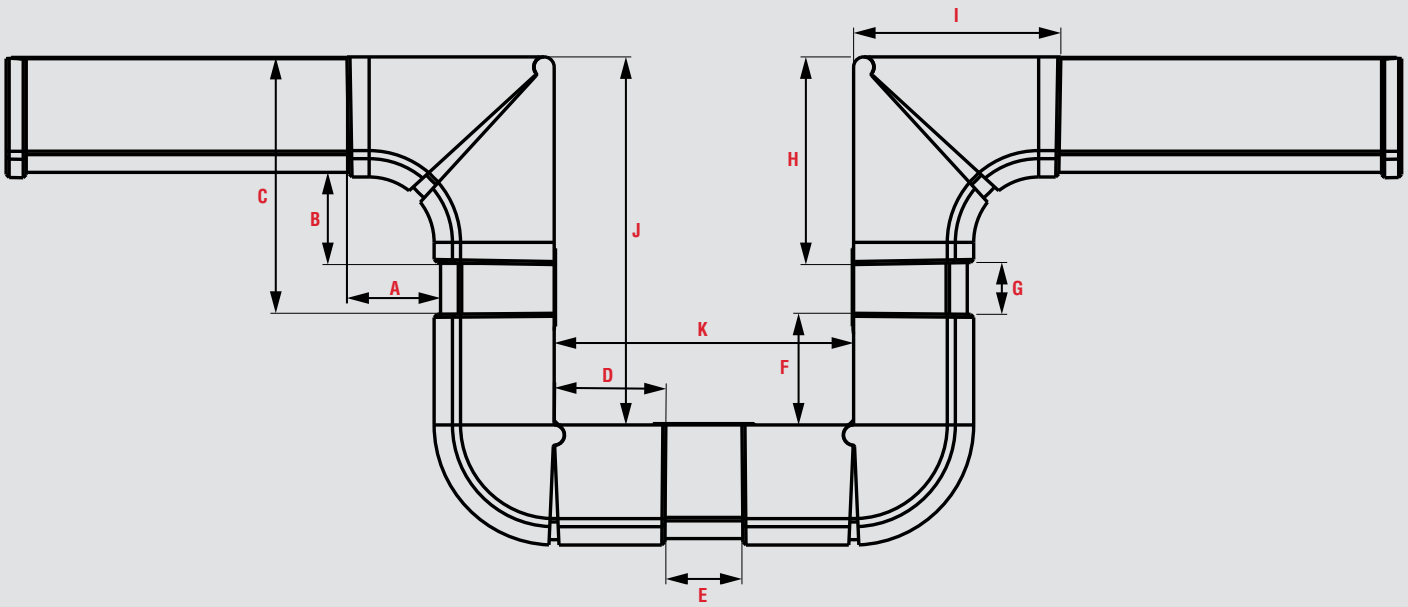

MINIMUM DISTANCE BETWEEN CORNERS (MM)										
A	B	C	D	E	F	G	H	I	J	K
47	47	128	56	35	56	24	104	104	184	147

Prestige 3D Technical – Antibac Blue

Prestige 3D Antibac Blue Installation

When planning the installation establish the layout of your system, paying particular attention to:

- **Direction Changes**
- **Feed Positions**
- **Component Spacing**

The carrier components are not treated with the antibacterial additive. As such these must always be fixed onto a surface where they will not be touched once the installation is complete.

During the installation of Prestige 3D Antibac Blue no special treatment of the product is required. There is no need for an installer to wear sterile gloves, use sterile tools or undertake special training.

Once installed, the Prestige 3D Antibac Blue system carries a 10 year guarantee, the same as all MK Cable Management products, giving both the installer and specifier confidence and peace of mind. The unique addition of a fluorescent additive gives further confidence, clearly identifying the product as Prestige 3D Antibac Blue. A bright blue glow under UV light indicates the antibacterial additive is present, a dull purple glow under UV light indicates standard PVCu.

When maintaining the product after installation, no special treatment is required. The antibacterial additive depends on intimate contact between surfaces of the trunking and the user, so any barriers such as dirt or grime will reduce or negate the antibacterial effect. However, the exterior of the trunking can be cleaned very simply using a damp cloth with a mild detergent, which must be thoroughly wiped off. Alternatively the trunking can also be cleaned using Ultraviolet light. Prestige 3D Antibac Blue is not intended to replace standard cleaning regimes. It is an additional protection which can only operate efficiently if the surfaces are kept free of dirt and grime. Before hand-over to the client the entire trunking run must be thoroughly cleaned as described in the product installation guide.

Prestige 3D Antibac Blue product and packaging is recyclable. At the end of its useful life it should be recycled where facilities exist.

The additive used in Prestige 3D Antibac Blue is registered with the Environmental Protection Agency (EPA) and is compliant with the European Biocidal Products Directive (BPD).

Prestige 3D Antibac Blue

Prestige 3D Antibac Blue is easily distinguishable from standard Prestige 3D, it has a different protective film and has a unique patented fluorescence under UV light which glows bright blue.

Prestige 3D Technical – Compact

Data Trunking System

Standards and Approvals

The Prestige 3D Compact System is manufactured in accordance with the requirements of BS EN 50085-1:2005 and BS 4662:2006. Copies of test certificates are available upon request. The system complies with all the relevant requirements of BS 7671:2008. MK has been awarded ISO 9002 accreditation.

TECHNICAL SPECIFICATION

CE MARKING
All relevant MK products in this brochure are CE marked, confirmation that they meet the EMC and LV directives.

MANUFACTURE
All trunking components are manufactured from PVCu.

APPEARANCE
Prestige 3D is manufactured in white. The trunking surface can be painted, if required, after installation.

PERFORMANCE

IMPACT	
MINIMUM STORAGE TEMPERATURE	-5ºC
MINIMUM INSTALLATION TEMPERATURE	-5ºC
MAXIMUM APPLICATION TEMPERATURE	+60ºC

FIRE PERFORMANCE
The PVCu materials used in the manufacture of MK products are non-flame propagating in accordance with BS EN 50085-1:2005. Extrusion material has achieved classification 1Y in accordance with BS 476-7. Moulding material has achieved 650ºC glow wire rating in accordance with BS EN 60695-2-11:2001.

THERMAL PROPERTIES
Prestige 3D Compact trunking is designed to accommodate local thermal expansion. Fitting instructions explain the procedure required to deal with the differential movement at the interface with the building fabric. Linear Expansion: 4mm over every 3000mm with a temperature rise of 25ºC.

CHEMICAL RESISTANCE
The PVCu materials used are non-corrosive and not affected by seawater. It has excellent resistance to mineral acids, alkalis and detergents, good resistance to alcohols, but is liable to attack from solvents such as ketones, aromatics and hydrocarbons. See PVCu Chemical Resistance table on Page 611 for more information.

ELECTRICAL

PRESTIGE 3D TRUNKING IS NON-CONDUCTIVE	
DIELECTRIC STRENGTH	40 kV/mm in DBP
	17 kV/mm in tx oil
RESISTIVITY	1014 Ω cm

BIOLOGICAL
Prestige 3D Compact trunking is. resistant to vermin and termites.

WORKABILITY
Prestige 3D Compact trunking is lightweight and can readily be cut and drilled to suit installation needs with hand tools.

DURABILITY
Prestige 3D Compact trunking is stable and will maintain its performance characteristics in accordance with the terms and conditions described above.

MAINTENANCE
Clip-on covers with optional screw fix and interchangeable accessories provide continuous accessibility for rewiring, extensions and modifications to an installation. Covers and accessories can be cleaned with water and household detergent. The surface can be decorated with commercial paints if required.* Classifications to BS EN 50085-1:2005 and BS EN 50085-2-1:2006 available on request.

Description

Prestige 3D Compact satisfies the growing data demands in more confined locations. Prestige 3D Compact has a smaller footprint than Prestige Plus and Prestige 3D and is rich in features, offering installation benefits and improved data cable management. The new concept uses the full trunking depth with a sliding open box (frame) principal to ease power and data connections. Prestige 3D Compact trunking is capable of being installed to Cat 5e, 6 and 7 data cable installation requirements, and the depth is more conducive to data accessories.

The centre compartment is intended for accessory mounting only. Power and data cables are to be run in the outer compartments

FEATURES

- Unique 'open box' mounting frames combined with divider knockouts to provide unhindered tool-free cable entry
- Patented Cat 5e, 6 and 7 compliant Data Sweep, with no loss of capacity and without the need for bulbous, protruding corner covers
- Cat Cat 5e, 6 and 7 compliant moulded flexible Internal and External Corners, moulded Flat Angles and Tees
- Divider Knockouts, making wiring easier and faster with no drilling or cutting
- Patented two stage Hinge Lids enables cables to be supported by the trunking cover during installation, and makes retro-installation of additional cables more simple
- Pre-punched bases
- Attractive easy to fit single piece covers for flat angle and flat tee
- Curved outer covers that complement MK Logic Plus accessories
- All extrusions manufactured from 100% recycled material*

* Based on 2014 consumption

For a full range of corresponding products, see pages 305-310 in the product selector.

Prestige 3D Technical – Compact

Data Trunking System

Dimensions (mm)

PROFILES

Compartment CSA mm²

1 = 742
2 = 1431
*(X) = 3035

ASSEMBLY

Dado = 1.20 Kg/m
Extended Dado = 1.35 Kg/m

WALL THICKNESS

VCT100 = 1.7mm
VCT110 = 1.7mm
VCT120 = 1.7mm
VCT140 = 2.0mm
VCT160 = 2.0mm

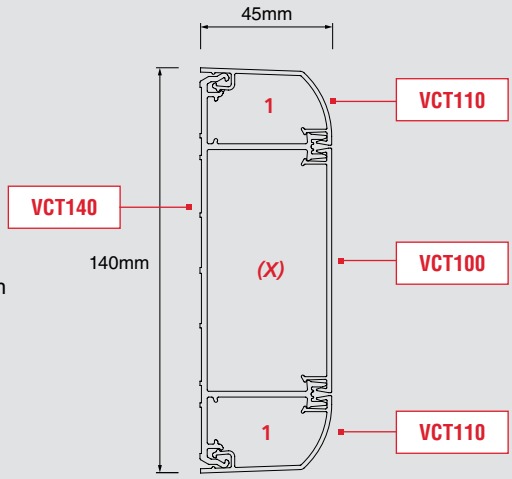

Dado

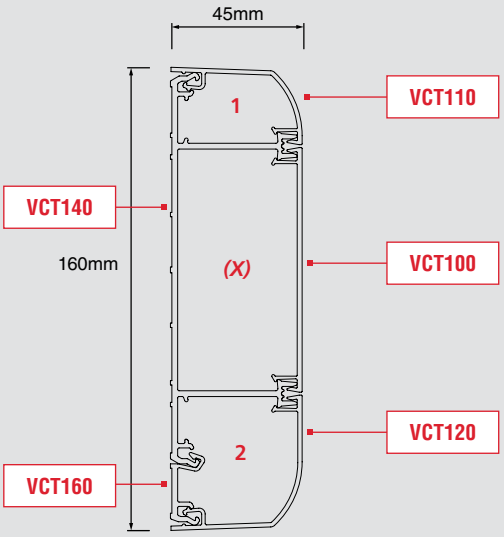

Extended Dado

CABLE CAPACITY

TYPE OF CONDUCTOR	SIZE	CABLE FACTOR	COMPARTMENT 1		COMPARTMENT 2		COMPARTMENT (X)	
			FULL TERM CSA (MM²)					
			742		1431		3035	
			TERM AT 45% FILL (MM²)					
			333		643		1365	
POWER CABLES			NUMBER OF CABLES AT 45% FILL					
PVC stranded	1.5mm²	8.6	38		74		158	
	2.5mm²	12.6	26		51		108	
	4mm²	16.6	20		38		82	
	6mm²	21.2	15		30		64	
DATA CABLES			NUMBER OF CABLES AT 45% FILL (A) AND FULL CAPACITY (B)					
			A	B	A	B	A	B
Cat 5E UTP	5.5mm dia.	30.2	11	24	21	47	45	100
Cat 5E STP	6.0mm dia.	36.0	9	20	17	39	37	84
Cat 6 UTP	6.5mm dia.	42.2	7	17	15	33	32	71
Cat 6 STP	7.0mm dia.	49.0	6	15	13	29	27	61
Cat 7	8.0mm dia	64.0	5	11	10	22	21	47

* Compartment (X) dimensions and capacity are given as guide only for instances where trunking is used for cable routing e.g. vertical drops/risers.

Prestige 3D Technical – Compact

Data Trunking System

Component Selection Guide

PROFILE	END CAP
140MM	VCT143WHI
160MM	VCT163WHI

PROFILE	INTERNAL CORNER
140MM	VCT141WHI
160MM	VCT161WHI

PROFILE	INTERNAL CORNER
140MM	VCT141WHI
160MM	VCT165WHI

FLAT ANGLE DOWN
VCT145WHI
VCT166WHI

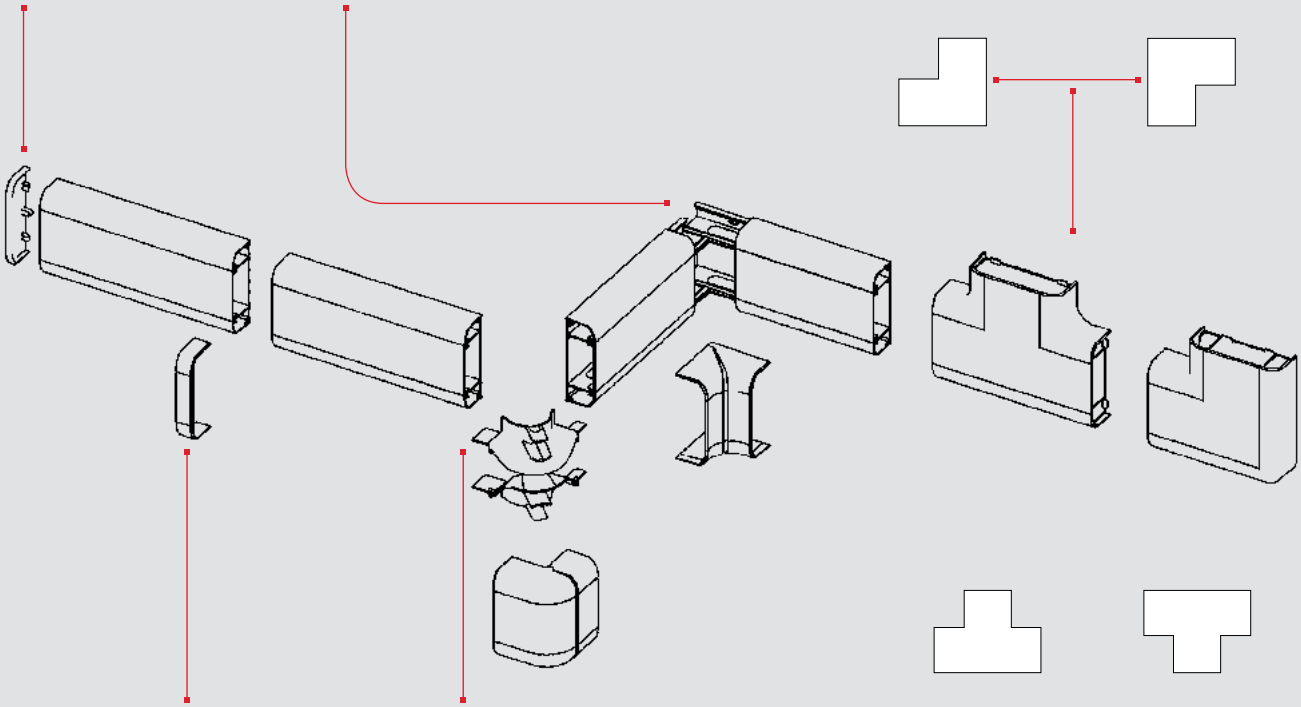

PROFILE	JOINT COVER
140MM	VCT144WHI
160MM	VCT164WHI

PROFILE	EXTERNAL CORNER
140MM	VCT142WHI
160MM	VCT162WHI

PROFILE	FLAT TEE UP
140MM	VCT147WHI
160MM	VCT167WHI

FLAT TEE DOWN
VCT147WHI

Flat Angles and Tees

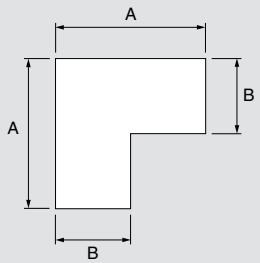

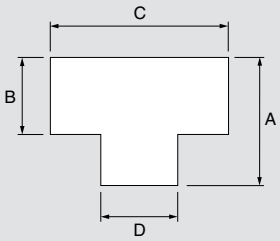

FABRICATED ANGLES AND TEES DIMENSIONS (MM)					
LIST NO	DESCRIPTION	A	B	C	D
VCT145WHI	Flat Angle 140 (Dado)	190mm	140mm		
VCT147WHI	Flat Tee 140 (Dado)	200mm	140mm	235mm	140mm
VCT165WHI	Flat Angle – Up 160 (Extended Dado)	215mm	160mm		
VCT166WHI	Flat Angle – Down 160 (Extended Dado)	215mm	160mm		
VCT167WHI	Flat Tee – Up 160 (Extended Dado)	220mm	160mm	235mm	140mm

Prestige 3D Technical – Compact

Installing Prestige 3D Compact

Figure shows minimum distance required for installing around corners

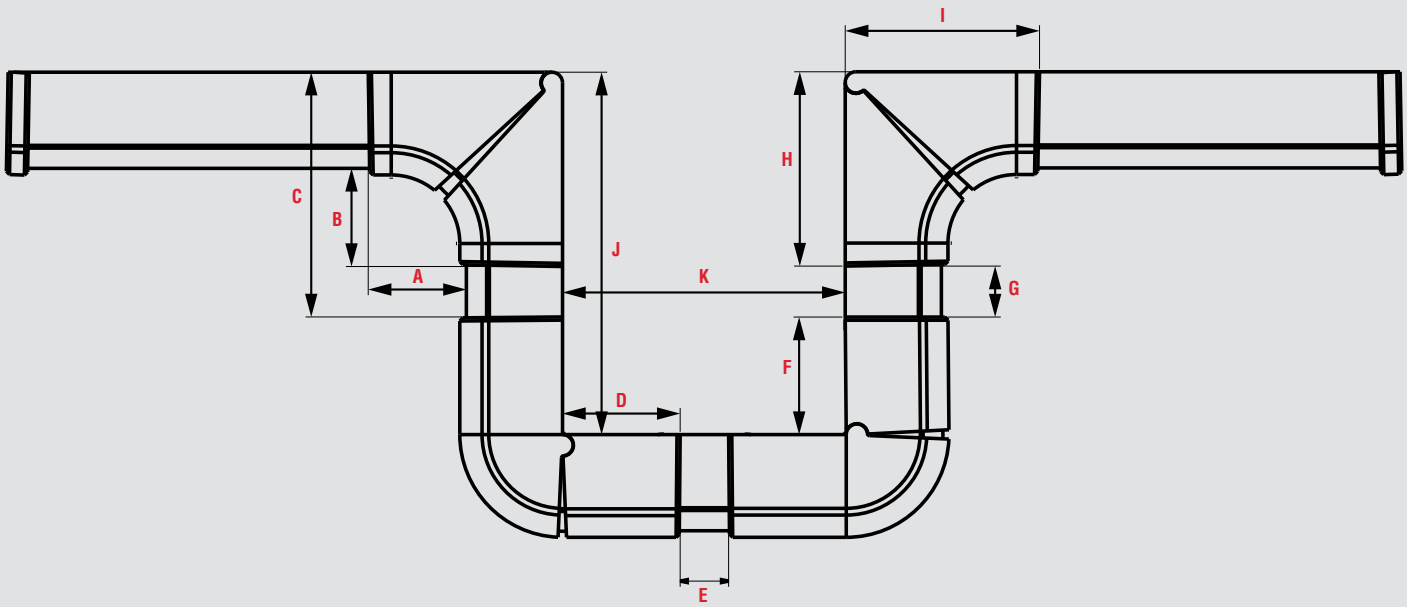

MINIMUM DISTANCE BETWEEN CORNERS (MM)										
A	B	C	D	E	F	G	H	I	J	K
47	47	116	56	35	56	24	92	92	172	147

Prestige 3D Technical

Data Trunking System

Screening Assembly (optional)

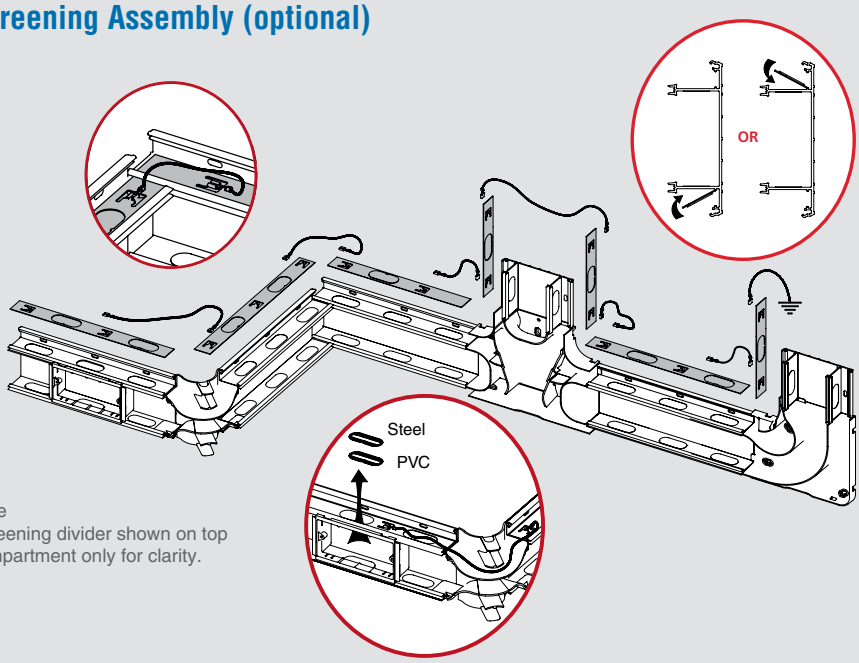

Note
Screening divider shown on top compartment only for clarity.

PRODUCT IDENTIFICATION	
VP30 / VCT30 Screening Divider 1.5m (steel)	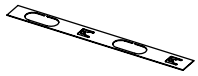
VX31 Screening Cable 300mm	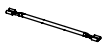

Flat Tee Bridge

The Flat Tee's bridge can be fitted in two positions increasing the versatility of cable runs whilst maintaining the correct separation and Cat 5e, 6 and 7 compatibility.

PRESTIGE COMPACT

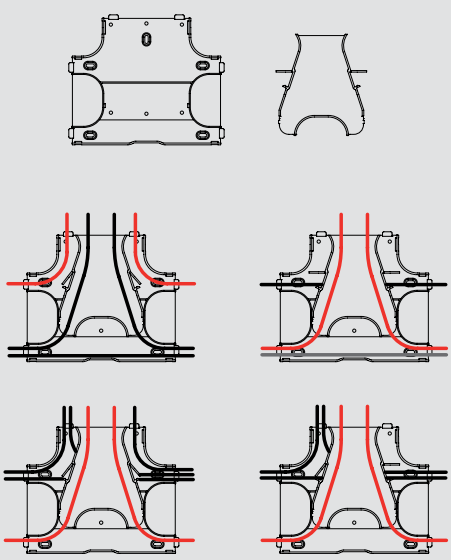

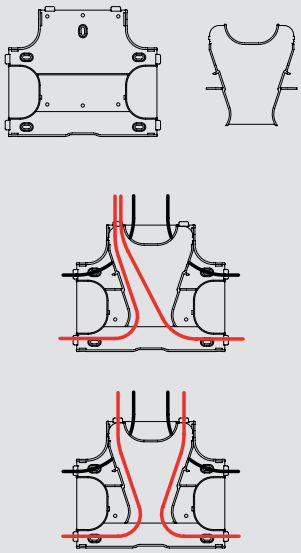

PRESTIGE 3D DADO AND SKIRTING

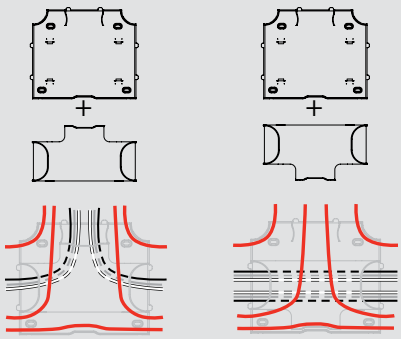

PRODUCT APPLICATION

PRESTIGE 3D DADO CABLE MANAGEMENT

Prestige 3D Dado Cable Management installed with Part M Compliant Graphite Logic Plus Socket Outlets with Outboard Rockers, alongside USB Outlets for convenient charging of mobile phones and other portable devices.

This system is an ideal specification for a project with high sustainability credentials. Prestige 3D extrusions are manufactured from 100% recycled content* and the whole system is made in the UK. Logic Plus Socket Outlets are also made in the UK offering a much reduced carbon footprint when compared to some imported products.

To find out more visit www.mkelectric.co.uk

*Based on 2014 Consumption

Prestige 2Com Technical

Data Trunking System

Standards and Approvals

The Prestige 2com trunking is a symmetrical two compartment system offering a Cat 7 flexible solution to routing data cabling whilst maintaining a slow bend radius of 50mm, with a separate compartment for power cables.

The trunking is normally surface mounted at dado or skirting height but may also be used vertically. The covers are of the snap-on type with the option of screw fixing for added security against vandalism. Special accessories include adaptors for connection to the full range of MK Ega Mini Trunking.

TECHNICAL SPECIFICATION

MATERIALS
All components are manufactured from PVCu.
Carriers, covers and cable dividers are extruded.
Carrier couplers, corner carriers, stop ends and accessory boxes are formed by injection moulding.

COLOURS
The system is available in a standard white colour.

OUTLETS
The system is designed to accommodate the complementary range of Logic Plus switches and sockets. Other MK wiring devices may also be used.

Classifications to BS EN 50085-1:2005 and BS EN 50085-2-1:2006 available on request.

Description

The Prestige 2com trunking is a symmetrical two compartment system offering a Cat 7 flexible solution to routing data cabling whilst maintaining a slow bend radius of 50mm, with a separate compartment for power cables. The trunking is normally surface mounted at dado or skirting height but may also be used vertically. The covers are of the snap-on type with the option of screw fixing for added security against vandalism. Special accessories include adaptors for connection to the full range of MK Ega Mini Trunking.

FEATURES

- System bend radius 50mm
  Exceeds Cat 5e, 6 and 7 data cable requirements
- Attractive styling complementary to Logic Plus
- Aesthetic one piece fitting covers with carriers
- Two equal compartments – maximises wiring compartment capacity
- Accessory mounting in either or both compartments – giving flexibility/ versatility
- Unobtrusive screw fixing covers to maximise security against tampering
- Ease of installation – butt jointed construction, no mitring required
- Economical – cost effective 3 components (2 x lids, 1 base)
- Suitable for skirting or dado mounting
- Pre-drilled base – ease/speed of installation
- Accommodates matching MK and other BS switches and sockets
- Interfaces with MK Premier, Ega Industrial and Ega Mini Trunking and Conduit Systems
- Strong PVCu sections are resistant to impact
- Manufactured to high precision standards
- Full range of components, spares and accessories
- Mounting frames for LJU6C and Euro data outlets – cost effective, minimum space requirement (for mounting in SELV compartment only)s
- All extrusions manufactured from 100% recycled material*

* Based on 2014 consumption

For a full range of corresponding products, see pages 311-316 in the product selector.

Prestige 2Com Technical

Data Trunking System

Dimensions (mm)

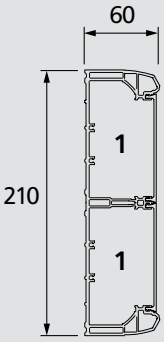

VTS2001WHI main carrier +
2 x VTS5WHI straight covers

WEIGHT:

2.41 Kg/m

WALL THICKNESS:

VTS2001WHI = 2.5mm, 2.0m
VTS5WHI = 1.7mm

CABLE CAPACITY

TYPE OF CONDUCTOR	SIZE	CABLE FACTOR	COMPARTMENT 1		COMPARTMENT 1 WITH 25MM BACK BOX		COMPARTMENT 1 WITH 35MM BACK BOX		COMPARTMENT 1 EXT CORNER 50MM DATA BEND	
			Full Term CSA 100% Fill (MM²)							
			4466		2236		1633		3132	
			TERM AT 45% FILL (MM²)							
			2009		1006		734		1409	
POWER CABLES			NUMBER OF CABLES AT 45% FILL							
PVC stranded	1.5mm²	8.6	233		116		85		163	
	2.5mm²	12.6	159		79		58		111	
	4mm²	16.6	121		60		44		84	
	6mm²	21.2	94		47		34		66	
DATA CABLES			NUMBER OF CABLES AT 45% FILL (A) AND FULL CAPACITY (B)							
			A	B	A	B	A	B	A	B
Cat 5E UTP	5.5mm dia.	30.2	66	147	33	74	24	54	46	103
Cat 5E STP	6.0mm dia.	36.0	55	124	27	62	20	45	39	87
Cat 6 UTP	6.5mm dia.	42.2	47	105	23	52	17	38	33	74
Cat 6 STP	7.0mm dia.	49.0	41	91	20	45	14	33	28	63
Cat7	8.0mm dia.	64	12	27	26	59	4	9	13	30

COMPONENTS

Flat Angles and Tees

These components are fabricated sections and space must be allowed for their inclusion in runs of trunking. All other components snap on over standard trunking profiles.

FLAT ANGLE

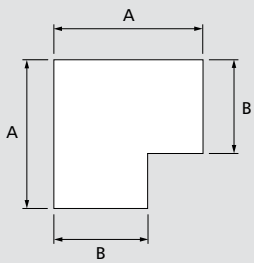

FLAT TEE

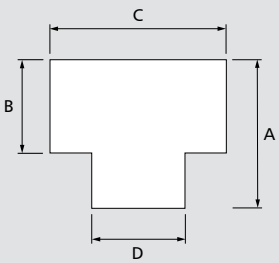

FLAT ANGLES DIMENSIONS (MM)

LIST NO	DESCRIPTION	A	B	C	D
VTS2012WHI	Flat angle	310	210		
VTS2014WHI	Flat T details	310	210	410	210

Prestige 2Com Technical

Data Trunking System

Component Selection Guide

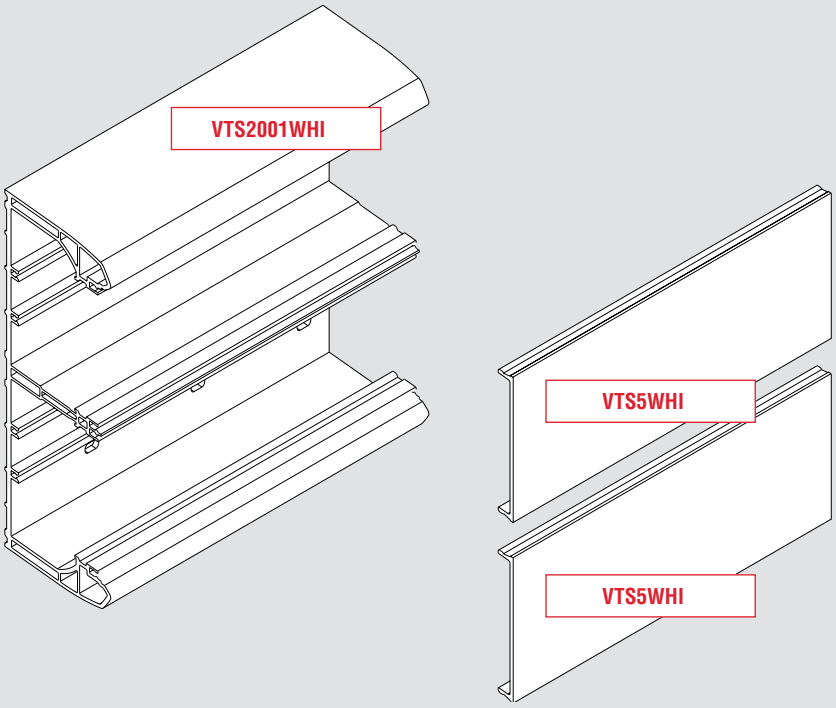

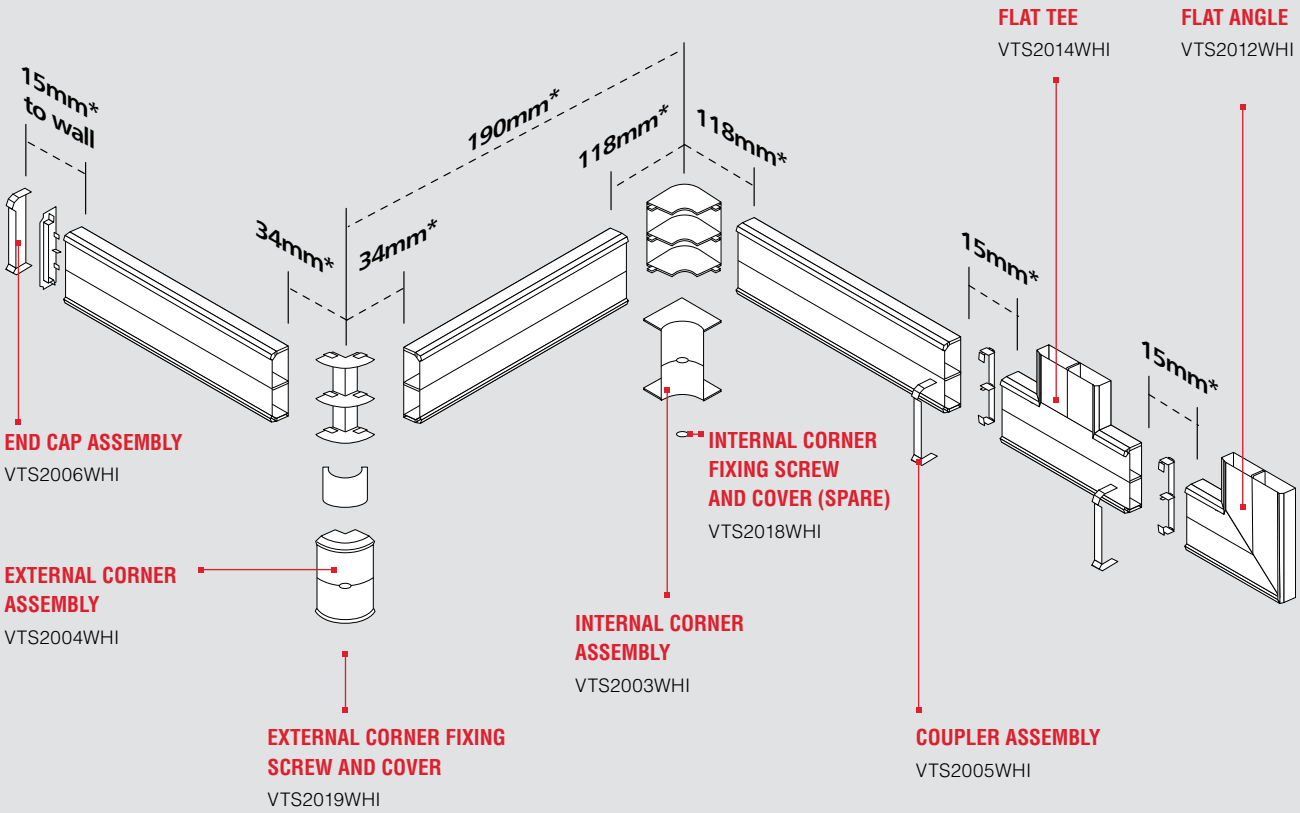

* Minimum distance

Prestige 2Com Technical

Data Trunking System

Installation Guide

GENERAL INSTALLATION GUIDELINES

TOOLS AND SUNDRIES REQUIRED FOR INSTALLATION:

1. Fine toothed tenon saw or a hacksaw with a 32 – 26 TPI blade for cutting the trunking, or preferably a circular saw with a 350mm diameter fine tungsten tipped blade (100T approx.)
2. All purpose knife or fine file for trimming of trunking
3. Spirit level, Plumb Bob and chalk line
4. A range of screwdrivers (flat or cross point) to suit fixing screws and Earth Carrier Connectors
5. A 5.5mm Ø drill bit and No.8 Round head or Pan head screws with suitable washers to secure the trunking.
6. Soft faced mallet to aid lid fitting

Planning the Installation

It is important to spend some time planning the installation, before starting. Time spent on planning the layout at this stage can avoid mistakes later on. The installation is designed for a non-conductive substrate, if you have any queries please contact: MK Technical Sales Service Department. Telephone 01268 563720.

1. Surface to which the trunking is to be installed should be flat and prepared for decorating.
2. Establish the layout of the trunking run with particular attention to the following: -
   a. Changes in direction of the trunking.
   b. The position of any feeds to or from the system.
   c. The position of any connections with existing trunking/ wiring systems.
   d. Allow for minimum distances between corners, couplers, screw fixings, angles and tees (please see individual technical sections for details).
   e. When installing at skirting level, ensure room is also allowed for future floor coverings to be fitted below trunking.

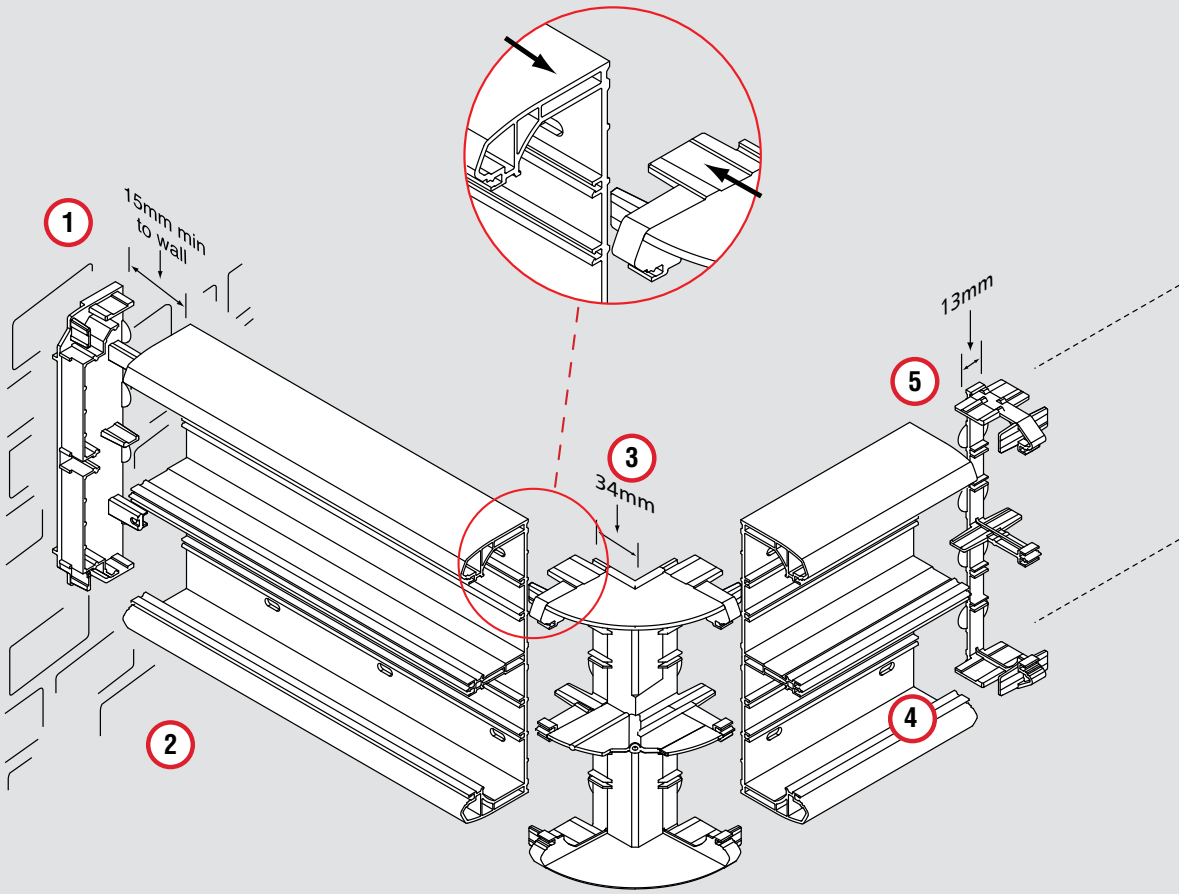

Prestige 2Com Technical

Data Trunking System

General Notes

Prior to installation strike a line of trunking using a plumb and chalk line for vertical, and spirit levels for horizontal runs.

1. Drill Holes in supporting walls prior to fixing
2. When mounting at skirting level allowance should be made for thickness of floor finish
3. Start Installation at a corner position
4. Debur all carrier cut ends
5. Carrier couplers must be placed at all junctions between carriers
6. Leave a gap of 5mm for expansion in long runs
7. Fixings require washers and No. 8 Round or Pan head screws
8. Fixings to be at 500mm centres and also at points within 100mm of each end
9. Cut trunking to allow for mini trunking / conduit (9a) and box adaptor crossover bridge (9b).

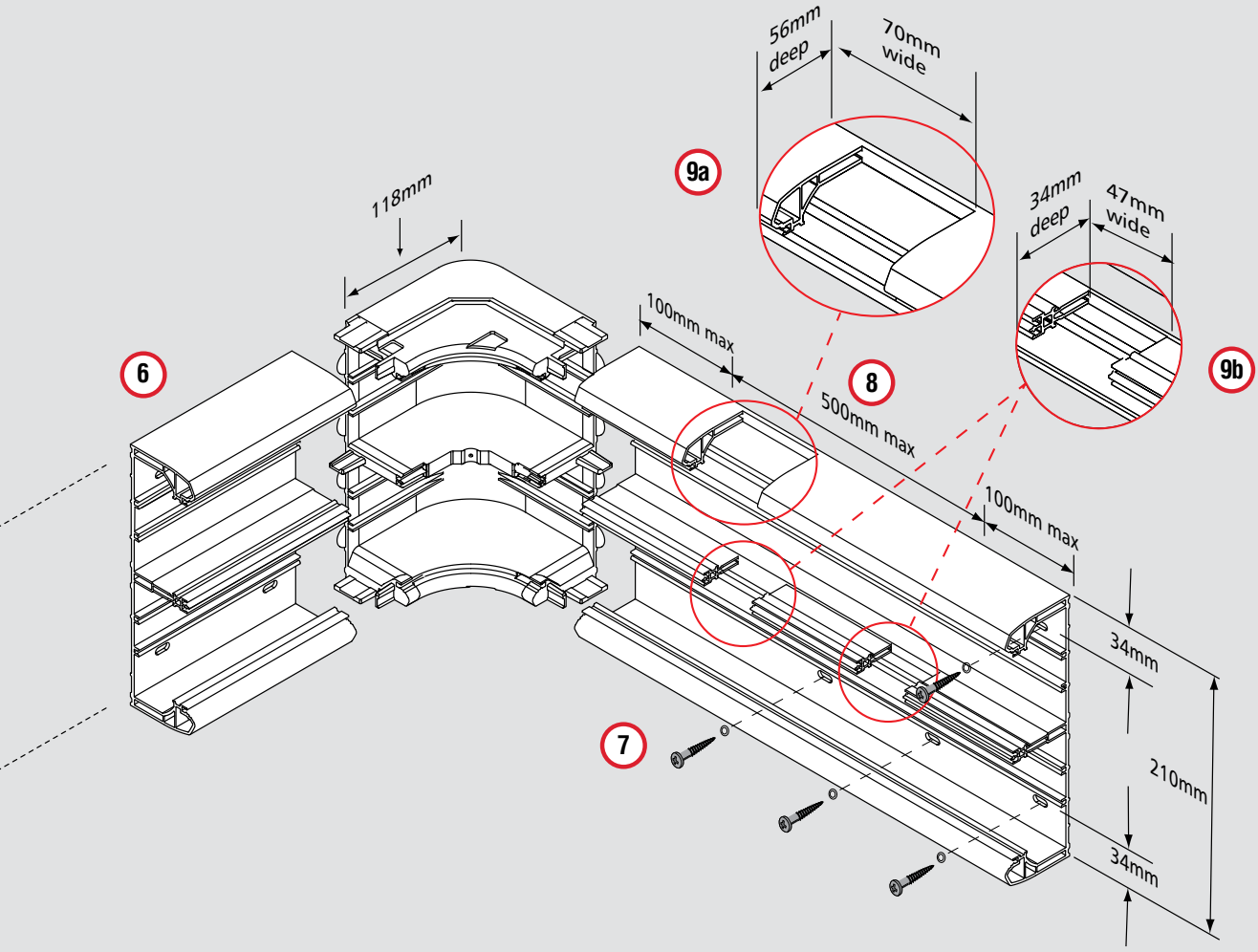

Prestige 2Com Technical

Data Trunking System

Installation Guide Continued

10 Debur all cover cut ends

11 Insert accessories in the following order

- a Box adaptor
- b Accessory Boxes
- c Appropriate slide (VTS2081 shown)
- d Cross over bridge
- e External Corner Radius (into the Data/Telecom compartment)

12 Power Cables

13 Data / Communication cables

14 Mark position where mains entry is required

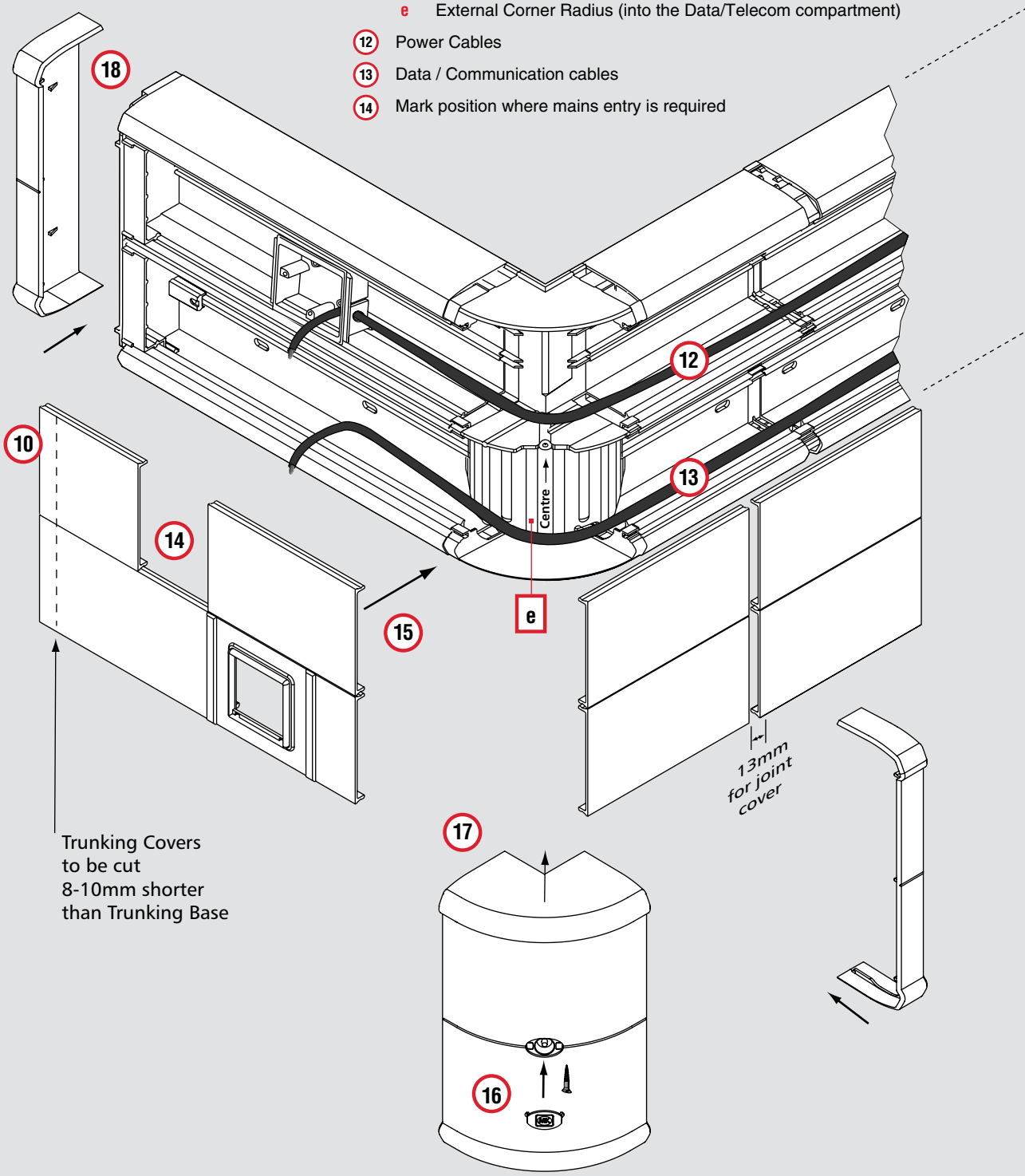

Prestige 2Com Technical

Data Trunking System

15 Fit covers by locating them correctly into position and pushing them firmly to snap in place.

16 Determine whether corners need to be screw fixed (Fig 1). Continue to locate correctly the Corner and Joint covers and push them firmly until they snap into place. Fit the appropriate badge to the Corner Covers.

17 Fit covers by locating them correctly into position and pushing them firmly to snap in place.

18 Fit end caps by pushing them on from the front so the clips slide behind the retainers and engage in the main carrier.

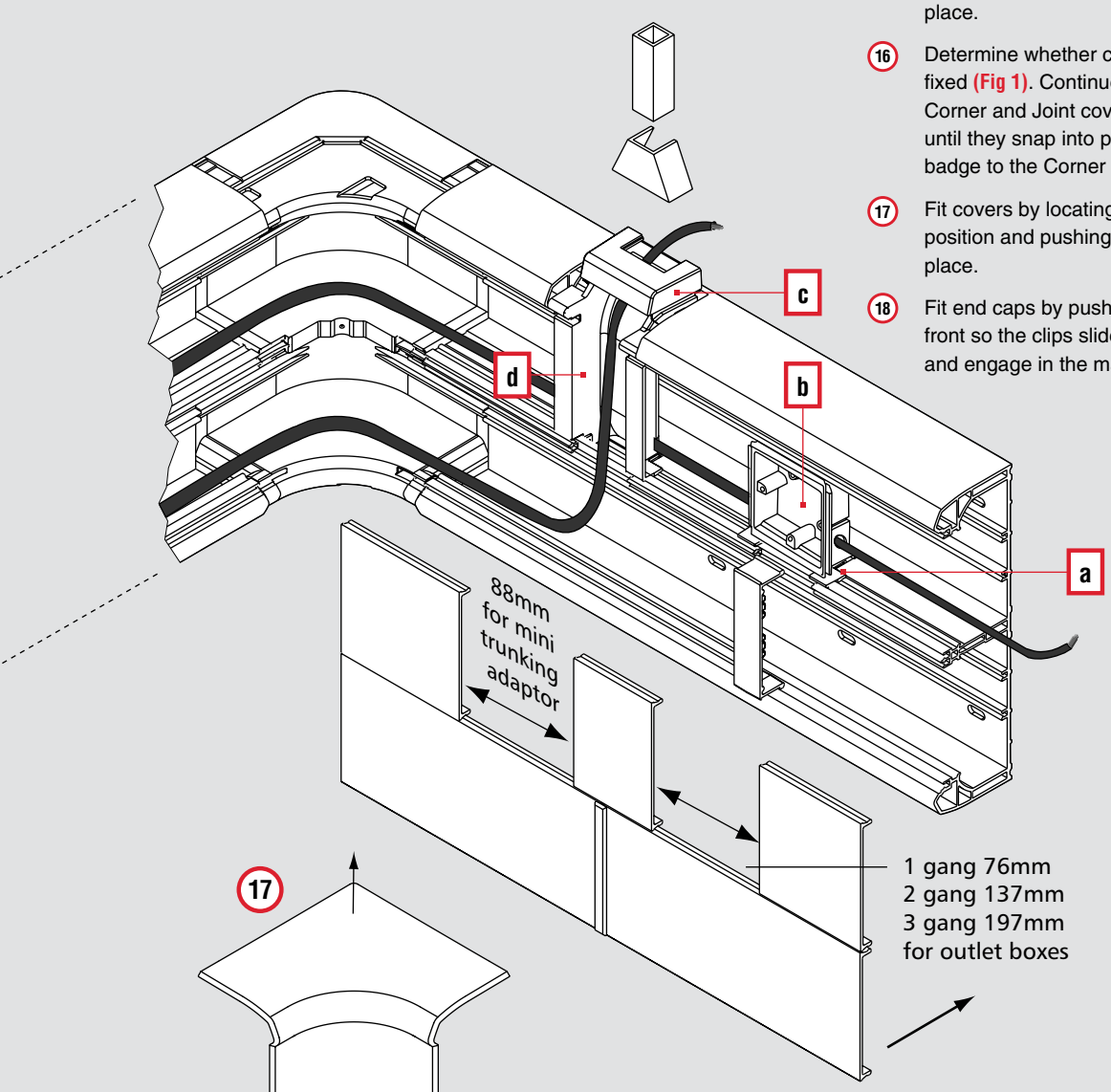

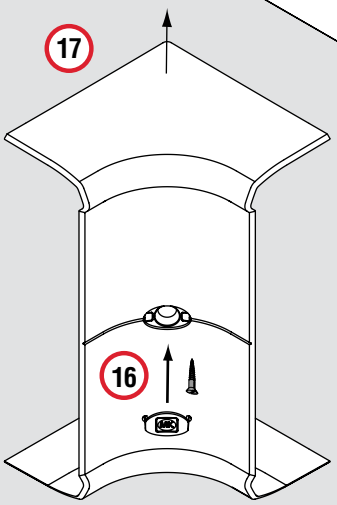

FIGURE 1

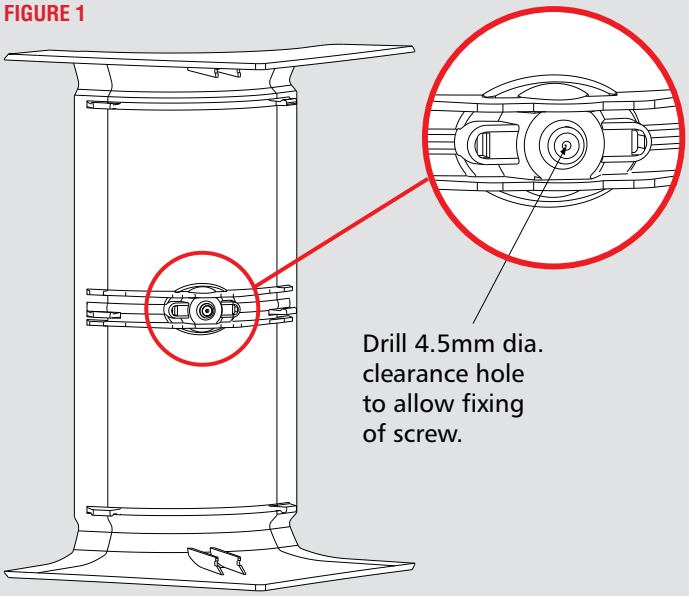

Prestige Poles and Posts Technical

Standards and Approvals

Prestige Power Post and Power Poles are manufactured in accordance with the requirements of BS 4678 Part 4.

All systems comply with all relevant requirements of BS 7671:2008.

TECHNICAL SPECIFICATION

MATERIALS
Aluminium AW 6060.

Complying with BS EN 573 and BS EN 755.

PVCu materials used in the manufacture of MK products are self extinguishing non-flame propagating in accordance with BS 4678 Part 4.

Extrusion material has been tested by a UKAS accredited laboratory in accordance with the requirements of BS 476 Part 7 and has achieved a Class 1Y.

Moulding material has been tested by a UKAS accredited laboratory and conforms with IEC 695-2-1 at a severity of 650°C

IET WIRING REGULATIONS
Designed and manufactured to comply in all respects with BS 7671:2008 (IET Wiring Regulations 17th Edition: 2008)

QUALITY ASSURANCE
The system is manufactured to BS EN ISO 9001

* Based on 2008 consumption

Description

POWER POST

MK Power Post provides a means to supply multi-services to work stations as an alternative to, or in conjunction with services outlet boxes. They fit neatly under desks and provide up to ten accessory outlets for any combination of power, telecommunications and data services.

Power Posts have a natural anodised aluminium body and are available with PVCu covers in a choice of charcoal or white, or white powder coated aluminium body with white PVCu cover. It is recommended that Power Posts are fitted with MK accessories which have thin profile front plates and are available in co-ordinating colours.

When used in conjunction with Interact or Cablelink Plus Screeded Floor systems, Power Posts provide even greater flexibility in cable distribution.

POWER POLE

MK Power Pole, similar in construction to the Power Post, is a multi-compartment system segregating power, data and telecom circuits and can accommodate a complete range of accessories including fire alarm manual call points.

It is suitable for both suspended and solid ceiling applications.

Prestige Power Poles can be easily cut to size on site and are equipped with a jacking facility to assist installation and ensure secure location.

PRESTIGE POLE AND POST CABLE CAPACITY

TYPE OF CONDUCTOR	SIZE	CABLE FACTOR	COMPARTMENT 1		COMPARTMENT 1 WITH PPC20 BACKBOX	
			Full Term CSA 100% Fill (MM²)			
			4196		1625	
			TERM AT 45% FILL (MM²)			
			1888		731	
POWER CABLES			NUMBER OF CABLES AT 45% FILL			
PVC stranded	1.5mm²	8.6	219		85	
	2.5mm²	12.6	149		58	
	4mm²	16.6	113		44	
	6mm²	21.2	89		34	
DATA CABLES			Number of Cables at 45% Fill (a) and Full Capacity (b)			
			A	B	A	B
Cat 5E UTP	5.5mm dia.	30.2	62	138	24	53
Cat 5E STP	6.0mm dia.	36.0	52	116	20	45
Cat 6 UTP	6.5mm dia.	42.2	44	99	17	38
Cat 6 STP	7.0mm dia.	49.0	38	85	14	33

Dimensions (mm)

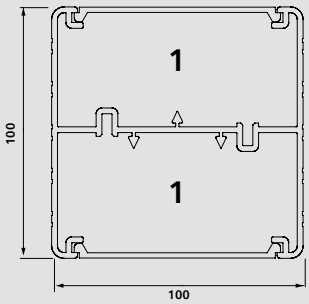

For a full range of corresponding products, see pages 318-319 in the product selector.

Prestige Poles and Posts Technical

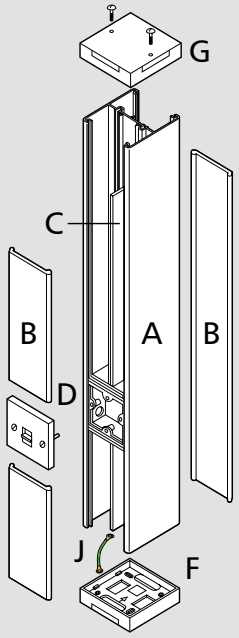

Power Post Assembly

DIMENSIONS		
LIST NO	SIZE (OVERALL) MM	WEIGHT KG (EACH)
PPT650	650 x 100 x 100	3.32

PART	DESCRIPTION	QTY.
A	Power Post Body (650mm long)	1
B	Cover Section (650mm long)	2*
C	Dividing Strip (not supplied)	
D	Outlet Box Assembly	5
E	SELOK Pins (not shown)	4
F	End Load Plate	1
G	Top Cover + Screws	1
J	Earth Link Strap	1

*Four cover sections are supplied with PPT650ALM – 2 x White & 2 x Charcoal

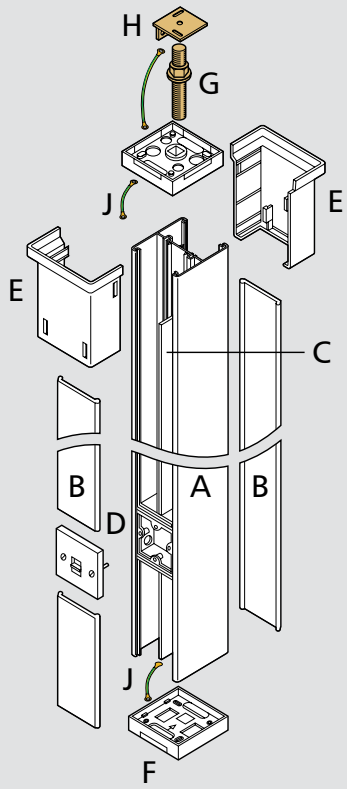

Power Pole Assembly

DIMENSIONS		
LIST NO	SIZE (OVERALL) MM	WEIGHT KG (EACH)
PPA100	3600 x100 x100	15.0

PART	DESCRIPTION	QTY.
A	Power Pole Body 3.6m long	1
B	Cover Section 3.6m long	2*
C	Dividing Strip 3.0m long	2
D	Outlet Box Assembly	6
E	Top End Collar	1
F	End Load Plates	2
G	Jacking Screw Assembly	1
H	Jack Locating Plate	1
J	Earth Link Strap	3

*Four cover sections are supplied with PPT100ALM – 2 x White & 2 x Charcoal

Installation

Power Poles and Power Posts are supplied as complete kits as per list and are to be assembled as described in the appropriate Installation Instruction booklet.

Additional accessory boxes are available, List No. PPC20WHI.

Additional Dividing strip is available, List No. PPC10WHI.

Powerlink Plus Technical

mkelectric.co.uk

Skirting and Dado Trunking System

TECHNICAL SPECIFICATION

ELECTRICAL

VOLTAGE RATING
63A, 250V a.c.

VOLTAGE DROP
L to N = 3.47 mV/A/metre run
L to E = 3.47 mV/A/metre run
N to E = 3.47 mV/A/metre run

EARTH FAULT LOOP IMPEDANCE
L to E = 3.47 mΩ/m run.

CONDITIONAL SHORT CIRCUIT RATING
(Fuse links BS 88 – 100A and BS 1361 100A).
Prospective current 16.5 KA
Mechanical withstand 10.0 KA peak min

MATERIALS
PVCu materials used in the manufacture of MK products are self extinguishing non-flame propagating in accordance with BS 4678 Part 4

Extrusion material has been tested by a UKAS accredited laboratory in accordance with the requirements of BS476: part 7 and has achieved a Class 1Y

Moulding material has been tested by a UKAS accredited laboratory and conforms with IEC 695-2-1 at a severity of 650°C

IET WIRING REGULATIONS
Designed and manufactured to comply in all respects with BS 7671:2008 (IET Wiring Regulations 17th Edition: 2008)

QUALITY ASSURANCE
The system is manufactured to BS EN ISO 9001

Tested to BS EN 61534-1:2011 &
BS EN 61534-21:2006

FEATURES

- Wide variety of visually and physically compatible mains and ELV outlets
- Complete segregation between mains and ELV
- Stylish and elegant appearance
- Easy to assemble, extend and modify
- Durable and impact resistant
- Attractive styling
- Suitable for skirting or dado mounting
- 3 compartment trunking
- Manufactured to high precision standards
- All extrusions manufactured from 100% recycled material*

*Based on 2014 consumption

Description

Powerlink Plus is a trunking distribution system which contains within its profile a 63A single phase set of busbars and facilities for carrying telecommunications and data services cables.

Co-ordinated within the system is a wide variety of electrical and extra low voltage (ELV) outlets.

On the mains side these include specially designed sockets, both switched and unswitched, nonstandard switchsockets, switches, connection units and, via a simple interface, facilities for mounting all standard MK outlets.

ELV outlets include a master telephone socket outlet, an isolated co-axial socket outlet, “handset” telephone linejack outlet, computer sockets, a blank box and cover to accommodate other ELV requirements and, via a simple interface, facilities for mounting all single gang, standard MK ELV outlets. Also available are BNC type, LJU6C/RJ45 outlets, Euro Outlets and a blank to accommodate other ELV requirements. Incorporates a ‘Stay-set’ mechanism and is mains failure proof, ie it will function under all the normal conditions expected of an RCD and will not trip in the event of a power cut. This makes it suitable for use with freezers or in inaccessible or unmanned locations.

For a full range of corresponding products, see pages 321-331 in the product selector.

Powerlink Plus Technical

Skirting and Dado Trunking System

Dimensions (mm)

The dado trunking is divided into three compartments. Two identical outer compartments are mainly for ELV cables with a third central compartment containing the busbars with a cableway above.

CROSS SECTION THROUGH DADO TRUNKING

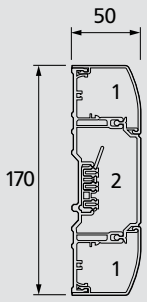

CROSS SECTION THROUGH SKIRTING AND DADO TRUNKING

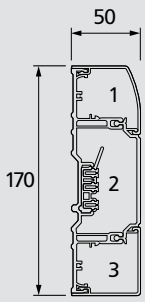

WALL THICKNESS	
Trunking base	2.4mm
Centre compartment cover	2.5mm
Curved cover	1.5mm

WEIGHT (KG)			
TYPE		NUMBER OF COMPARTMENTS WITH SCREENING	
		1	2
Dado trunking without busbar (K1903)	2.4	3.0	3.6
Dado trunking with busbar (K1963)	3.0	3.6	4.2

POWERLINK PLUS CABLE CAPACITY

TYPE OF CONDUCTOR	SIZE	CABLE FACTOR	COMPARTMENT 1 (CURVED)		COMPARTMENT 2 (WITH BUSBAR)		COMPARTMENT 2 (WITH BUSBAR)		COMPARTMENT 3 (SQUARE)	
			Full Term CSA 100% Fill (MM²)							
			943		2968		2528		1044	
			TERM AT 45% FILL (MM²)							
			424		1335		1137		469	
POWER CABLES			NUMBER OF CABLES AT 45% FILL							
PVC stranded	1.5mm²	8.6	49		155		132		54	
	2.5mm²	12.6	33		105		90		37	
	4mm²	16.6	25		80		68		28	
	6mm²	21.2	20		62		53		22	
DATA CABLES			NUMBER OF CABLES AT 45% FILL (A) AND FULL CAPACITY (B)							
			A	B	A	B	A	B	A	B
Cat 5E UTP	5.5mm dia.	30.2	14	31	44	98	0	0	15	34
Cat 6 UTP	6.5mm dia.	42.2	10	22	31	70	0	0	11	24
Cat 6 STP	7.0mm dia.	49.0	8	19	27	60	0	0	9	21

Powerlink Plus Technical

Skirting and Dado Trunking System

Components

These components are fabricated sections and space must be allowed for their inclusion in runs of trunking. All other components snap on over standard trunking profiles.

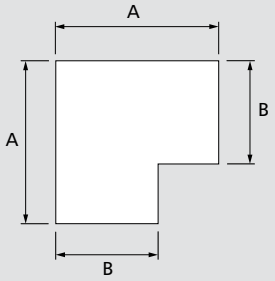

DIMENSIONS (MM)		
FLAT ANGLE	A	B
DADO	270	170
SKIRTING	270	170

Flat Angles and Tees

These components are fabricated sections and space must be allowed for their inclusion in runs of trunking. All other components snap on over standard trunking profiles.

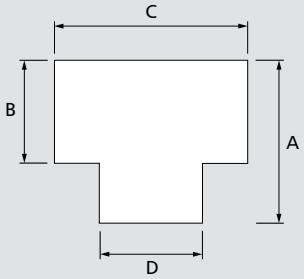

DIMENSIONS (MM)		
FLAT TEE	A	B
DADO	270	170

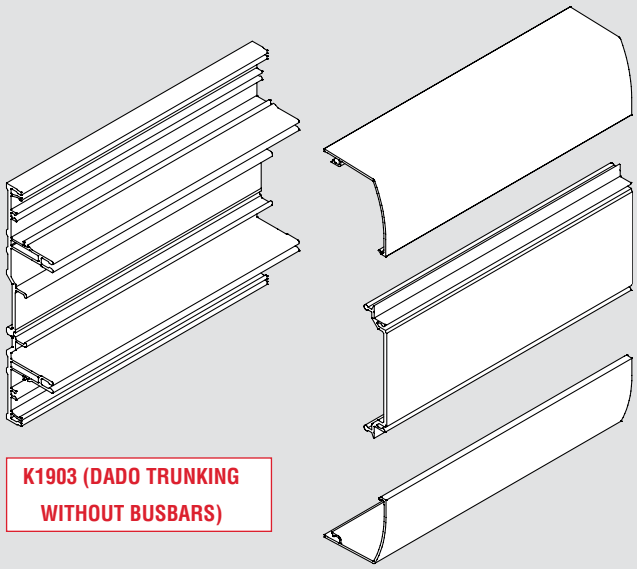

K1903 (DADO TRUNKING WITHOUT BUSBARS)

Powerlink Plus Technical

Skirting and Dado Trunking System

Component Selection Guide

TRUNKING	END CAP
K1963	K1904
K1903	K1904
K1962	K1944

CABLE LINK ASSEMBLY
1919

TRUNKING
K1963
K1903

TRUNKING	FLAT ANGLE UP	FLAT ANGLE DOWN
K1963	K1992	K1992
K1903	K1992	K1992
K1962	K1957	K1958

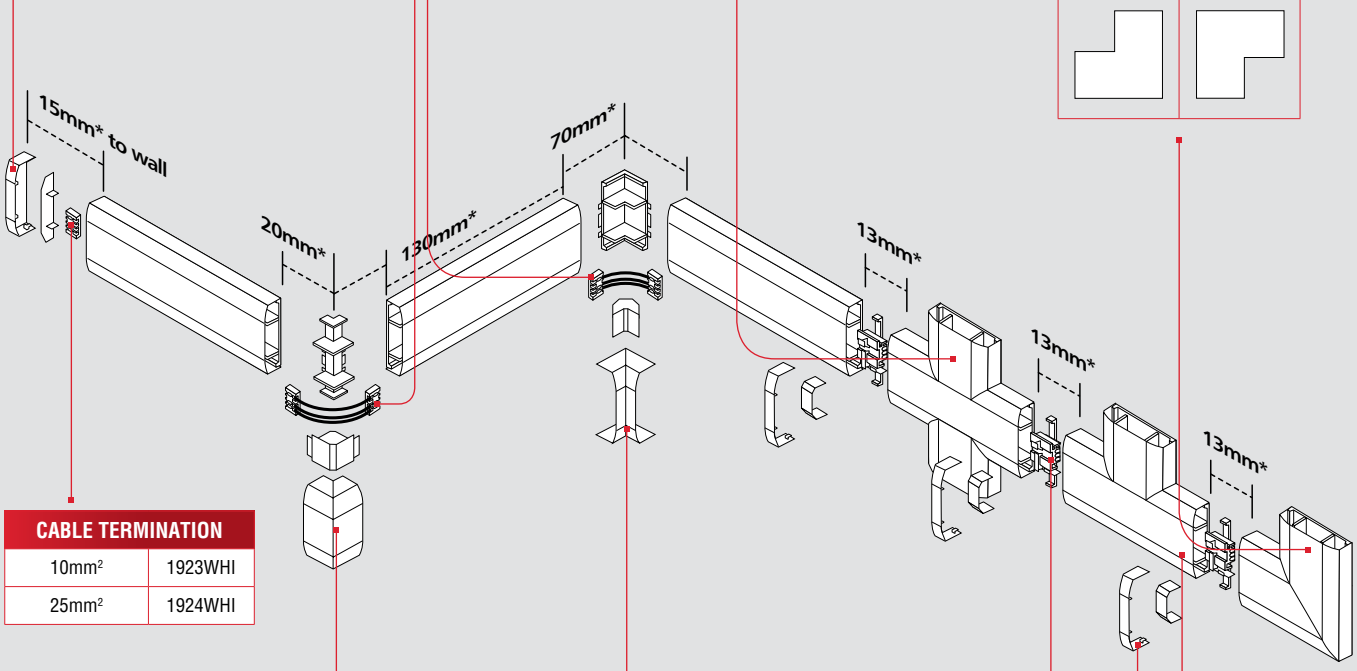

CABLE TERMINATION	
10mm²	1923WHI
25mm²	1924WHI

TRUNKING	EXT CORNER
K1963	K1906
K1903	K1906
K1962	K1912

TRUNKING	INT CORNER
K1963	K1905
K1903	K1905
K1962	K1911

PLUG IN BUSBAR COUPLER
K1925WHI

TRUNKING	COUPLER
K1963	K1908
K1903	K1908
K1962	K1945

TRUNKING	FLAT TEE UP	FLAT TEE DOWN
K1963	K1992	K1992
K1903	K1992	K1992

* Minimum distance

Powerlink Plus Technical

Skirting and Dado Trunking System

Installation Guide

GENERAL NOTES

Prior to installation strike a line of trunking using a plumb and chalk line for vertical, and spirit levels for horizontal runs.

1. Surface track accommodates 63 amp busbar with an integral duct directly above mains.
2. Data and Telecom cables.
3. Pre cut slots and circular holes at 100mm centres permit fixing holes to be drilled and a wallplug with screw inserted after the surface track has been positioned.
4. When fixing trunking use bushes provided and No. 8 wood screws.
5. Ensure trunking base is secured within 100mm from the end and a maximum of 500mm apart on either side along the length.
6. Check levels frequently – particularly at corners.
7. Debur all cut ends using a file or a sharp knife.
8. For mini trunking adaptors drill a 20mm diameter hole through the wall of the centre compartment using drill guide. Insert the tunnel and fix with two screws provided.
9. Bridging busbar compartment – if required to take cables from top compartment to bottom or vice versa – drill holes to align with top and bottom holes of the centre compartment. Cut out 85mm from the busbar at the required position. Install cable link (1919) to the busbar and snap fit cable crossing barrier (K1937CHA) over cables.
10. Commence installation at cable entry position. Route cables into the central section, wire in to the selected cable termination and plug into adjacent busbar and secure with screws supplied.

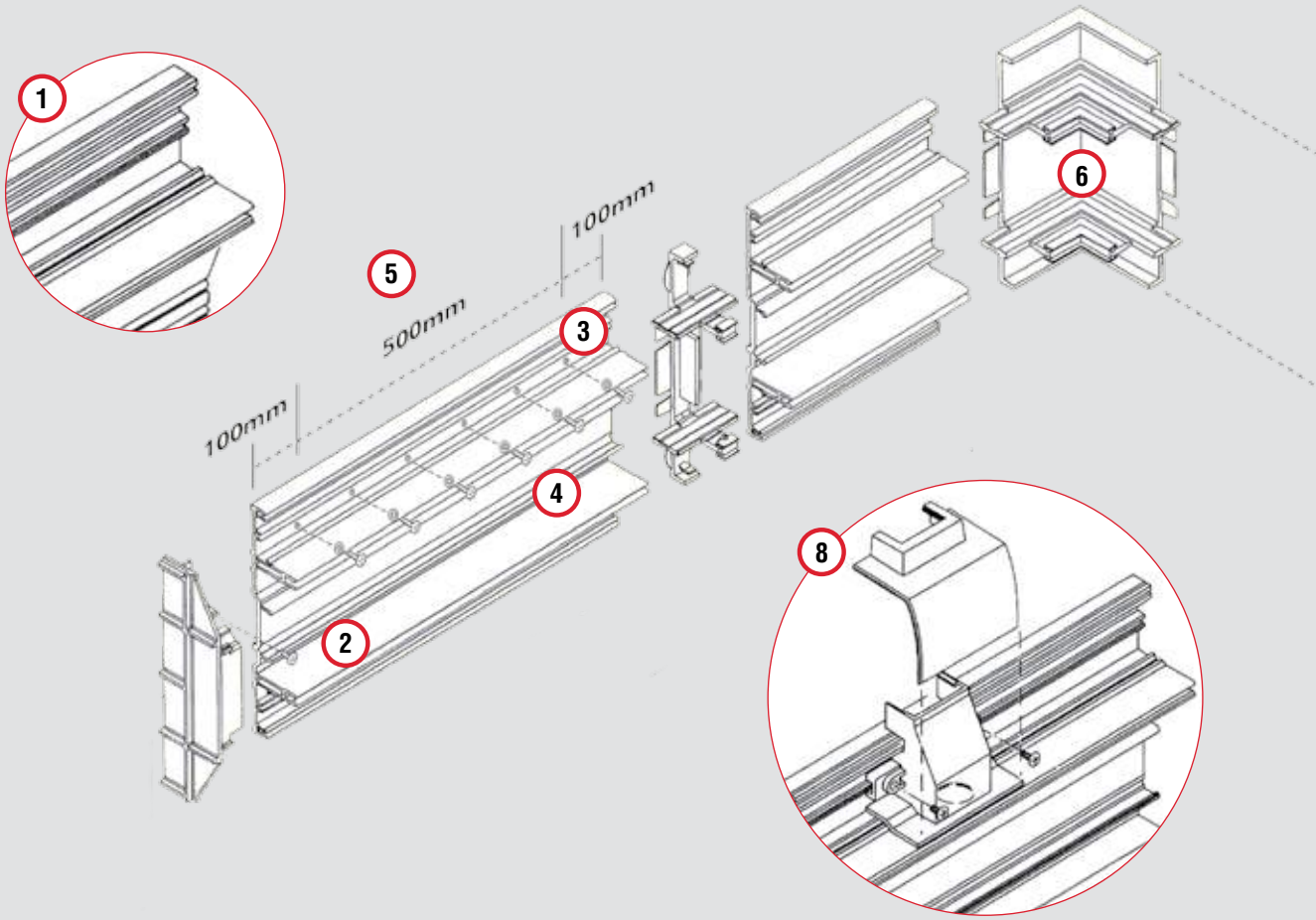

Powerlink Plus Technical

Skirting and Dado Trunking System

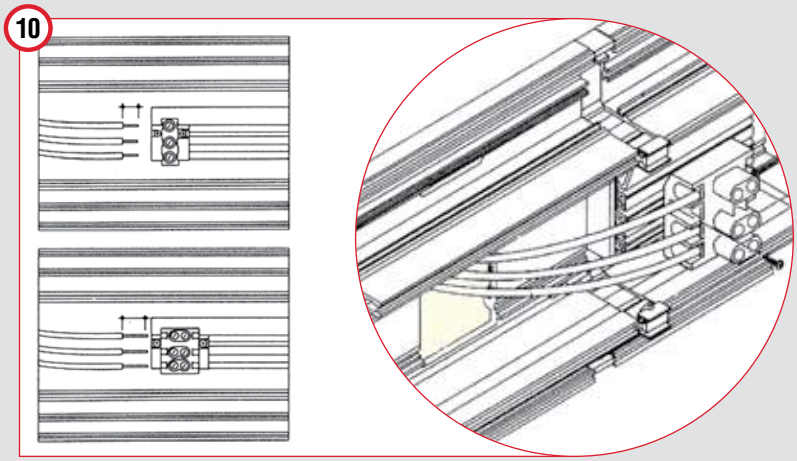

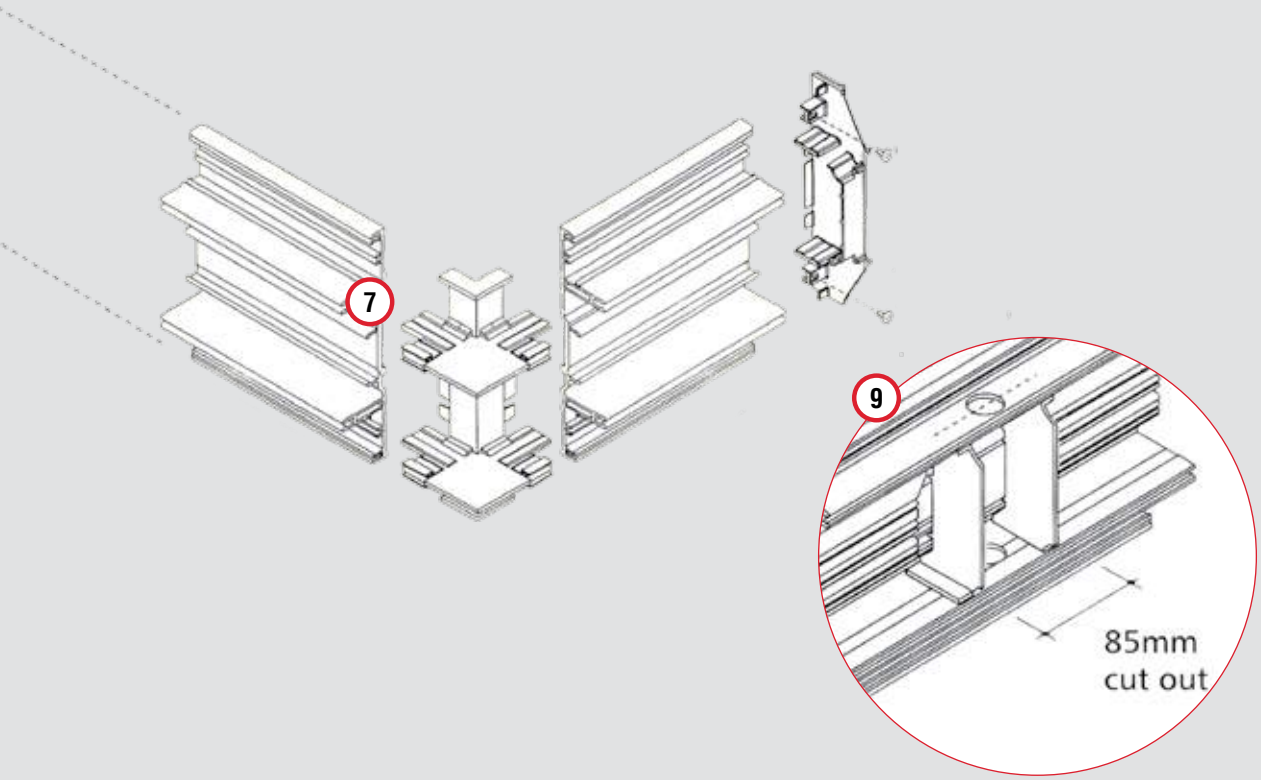

Powerlink Plus Technical

Skirting and Dado Trunking System

Installation Guide Continued

12. Cut central cover to length to fit exactly between the exposed frontplates of accessories. At coupling positions leave expansion gaps by cutting the central cover to the same length as the trunking base.
13. Secure centre covers to the main base with the screws provided every 500mm max, top and bottom and within 150mm of accessories and fittings.
14. At the junction of two adjacent lengths of trunking busbar plug in the coupler to maintain electrical continuity. It is fitted over a protector in the coupler carrier.
15. Data / Telecoms Devices – Secure enclosure box over centre compartment with screws supplied. Run cabling into enclosure and terminate onto outlet on frontplate. Secure front cover to enclosure box with screws provided.
16. Internal and external corners – Connect the lengths of busbar using the cable link assembly (1919) and secure trunking using the screws provided.

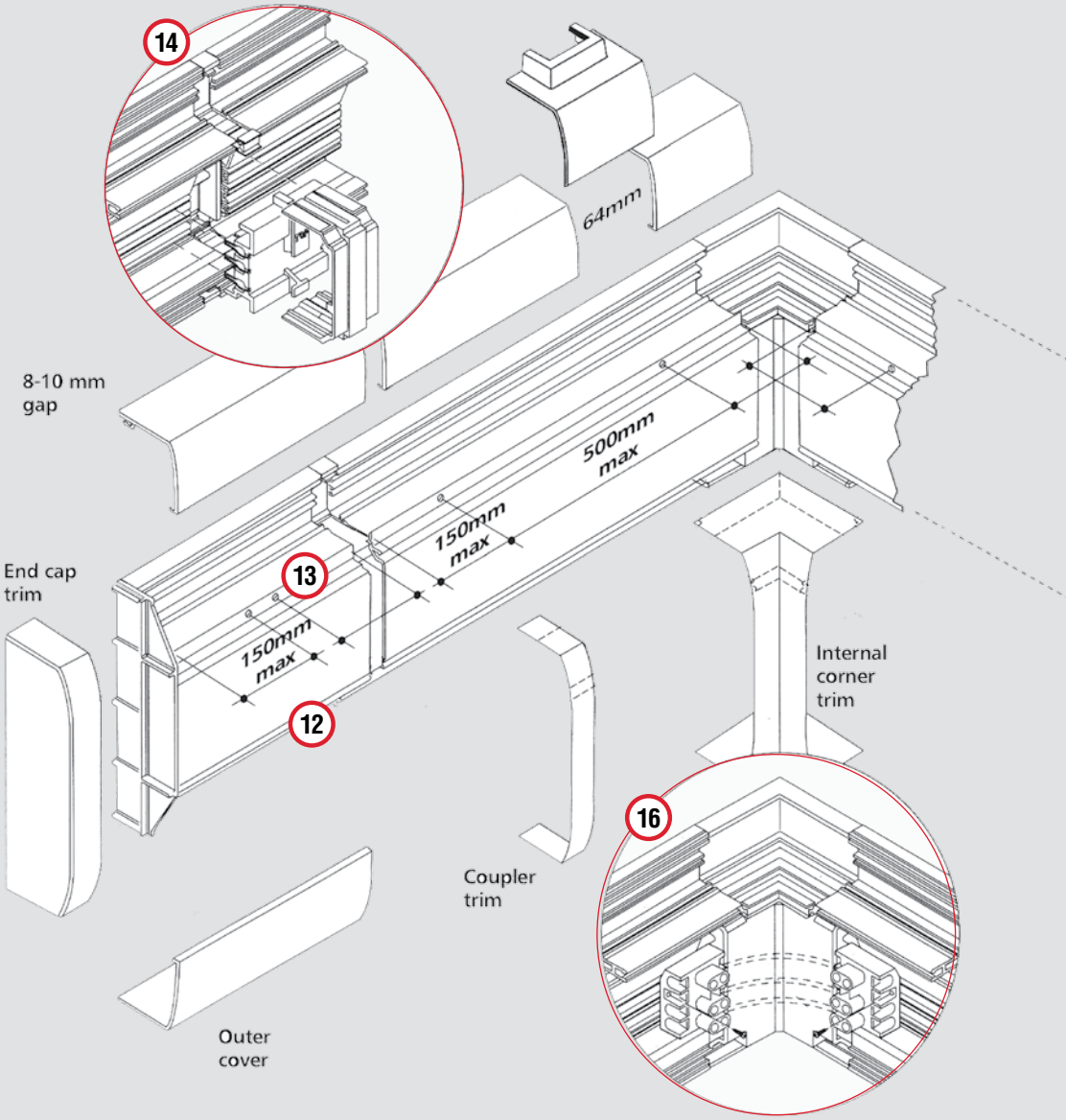

Powerlink Plus Technical

Skirting and Dado Trunking System

17 Moulded corner and coupler shields should be fitted before fitting any covers. They are secured by the central covers overlapping each side of the component and do not require additional fixing.

18 Powerlink Plus Sockets – Plug the socket onto the busbars in the required region ensuring that the socket clips fully locate firmly on to their corresponding busbars. Secure with screws provided. Note – do not tamper with busbar clips.

Plug on connection units – Connect the load conductors which are either routed through the centre compartment of the trunking or enter through the flex outlet. Plug connection unit onto busbar where required and secure as described above.

19 Outer Covers – For central covers and end cap retainers, leave a gap of 8-10mm and snap fit onto trunking.

20 Snap fit end caps then other trims after fitting all central and outer covers.

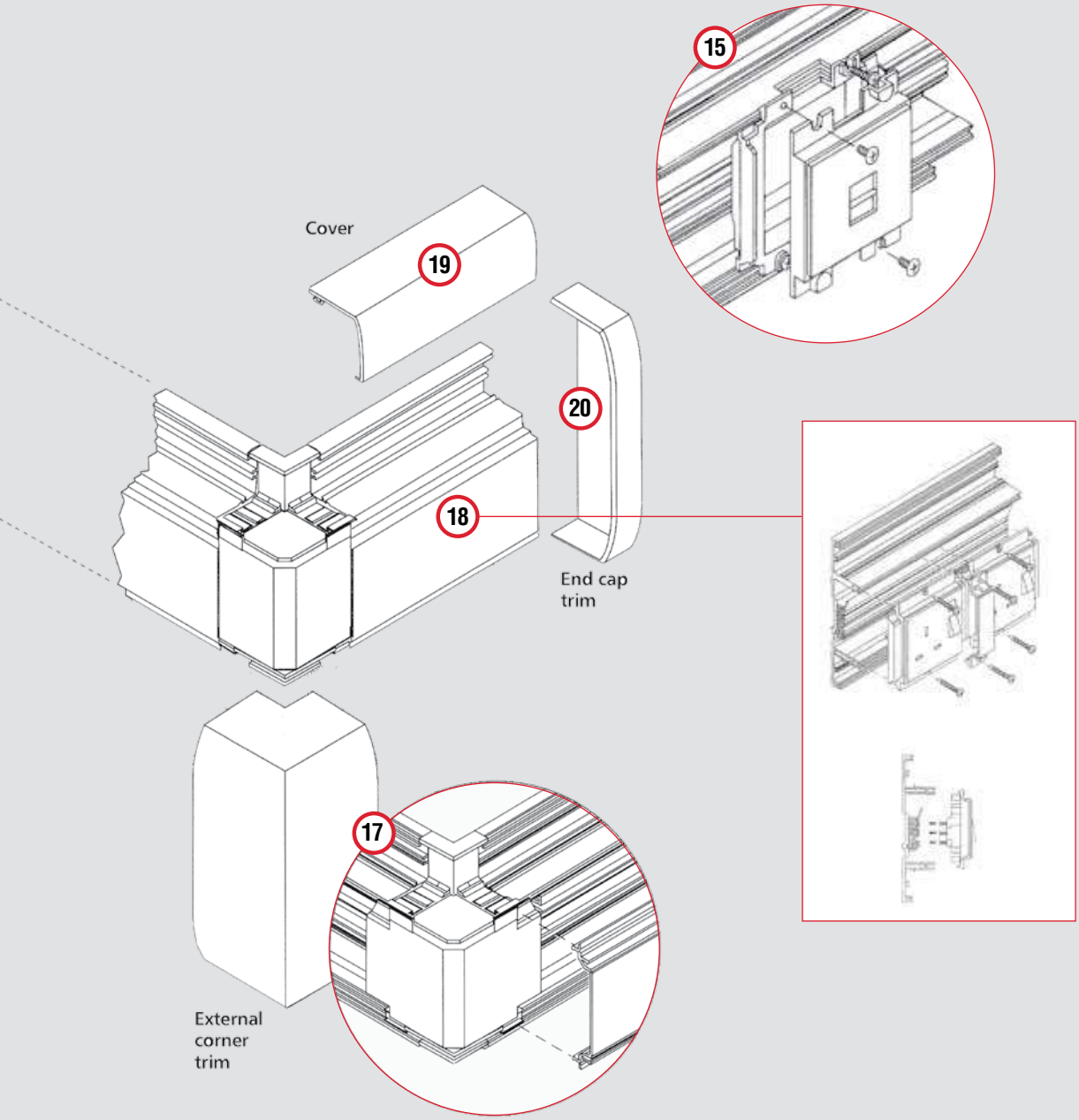

Pinnacle Technical

Bench and Shelf Trunking

TECHNICAL SPECIFICATION

MATERIALS
PVCu materials used in the manufacture of MK products are self extinguishing non-flame propagating in accordance with BS 4678 Part 4.

Extrusion material has been tested by a UKAS accredited laboratory in accordance with the requirements of BS 476 Part 7 and has achieved a Class 1Y.

Moulding material has been tested by a UKAS accredited laboratory and conforms with IEC 695-2-1 at a severity of 650°C.

IET WIRING REGULATIONS
Designed and manufactured to comply in all respects with BS 7671:2008 (IET Wiring Regulations 17th Edition: 2008)

QUALITY ASSURANCE
The system is manufactured to BS EN ISO 9001

Classifications to BS EN 50085-1:2005 and BS EN 50085-2-1:2006 available on request

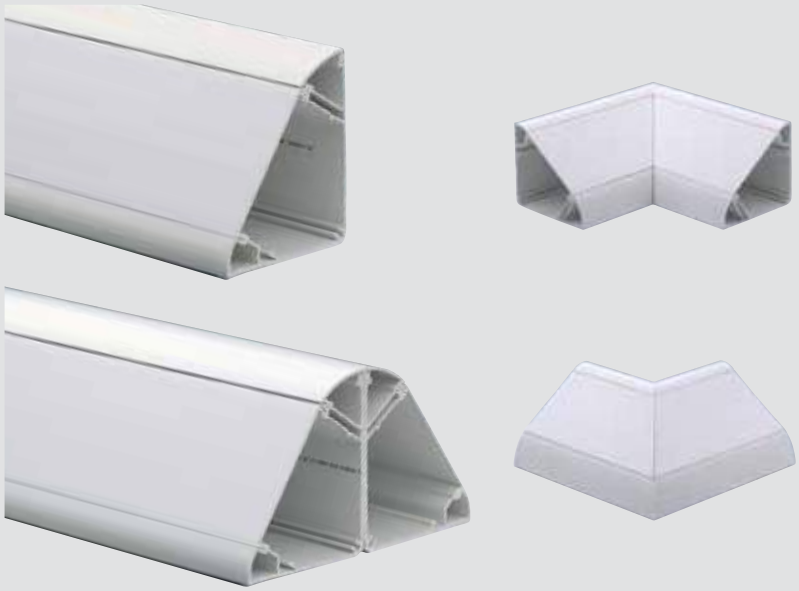

FEATURES

- Available in a single or double configuration
- May be fitted either direct to the work surface or inverted above the working area
- Cable segregation is provided by two separate compartments with the facility to further subdivide the main compartment by means of a clip-in cable divider
- Single profiles may be converted to a back to back double assembly. A onepiece centre lid and double end caps complete the coupling
- Prefabricated internal and external corners
- Coupler sets for greater strength and protection
- Bench units are also available to match the system
- All extrusions manufactured from 100% recycled material*

Description

Pinnacle is an angular bench trunking system ideally suited for distributing LV electrical and communication services in laboratories, schools, workshops and other applications where the service contacts are mounted on or above desks and benches.

* Based on 2014 consumption

For a full range of corresponding products, see pages 332-337 in the product selector.

Bench and Shelf Trunking

Dimensions (mm)

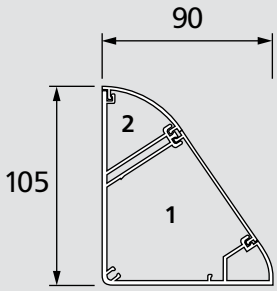

VERSION 1 PTS

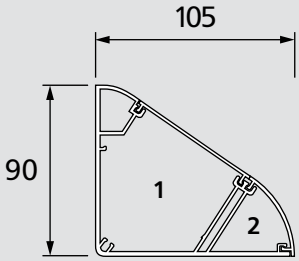

VERSION 2 PTS

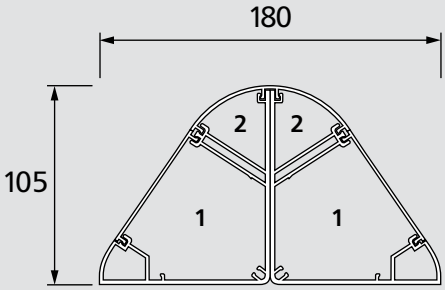

VERSION 3 PTD

POWERLINK PLUS CABLE CAPACITY

TYPE OF CONDUCTOR	SIZE	CABLE FACTOR	COMPARTMENT 1		COMPARTMENT 1 WITH 25MM BACKBOX		COMPARTMENT 1 WITH 35MM BACKBOX		COMPARTMENT 1	
			Full Term CSA 100% Fill (MM²)							
			4510		2499		1857		460	
			TERM AT 45% FILL (MM²)							
			2029		1124		835		207	
POWER CABLES			NUMBER OF CABLES AT 45% FILL							
PVC stranded	1.5mm²	8.6	235		130		97		24	
	2.5mm²	12.6	161		89		66		16	
	4mm²	16.6	122		67		50		12	
	6mm²	21.2	95		53		39		9	
DATA CABLES			NUMBER OF CABLES AT 45% FILL (A) AND FULL CAPACITY (B)							
			A	B	A	B	A	B	A	B
Cat 5E UTP	5.5mm dia.	30.2	67	149	37	82	27	61	6	15
Cat 5E STP	6.0mm dia.	36.0	56	125	31	69	23	51	5	12
Cat 6 UTP	6.5mm dia.	42.2	48	106	26	59	19	44	4	10
Cat 6 STP	7.0mm dia.	49.0	41	92	22	51	17	37	4	9

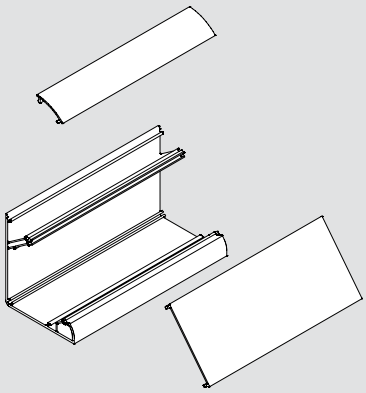

PTS3WHI

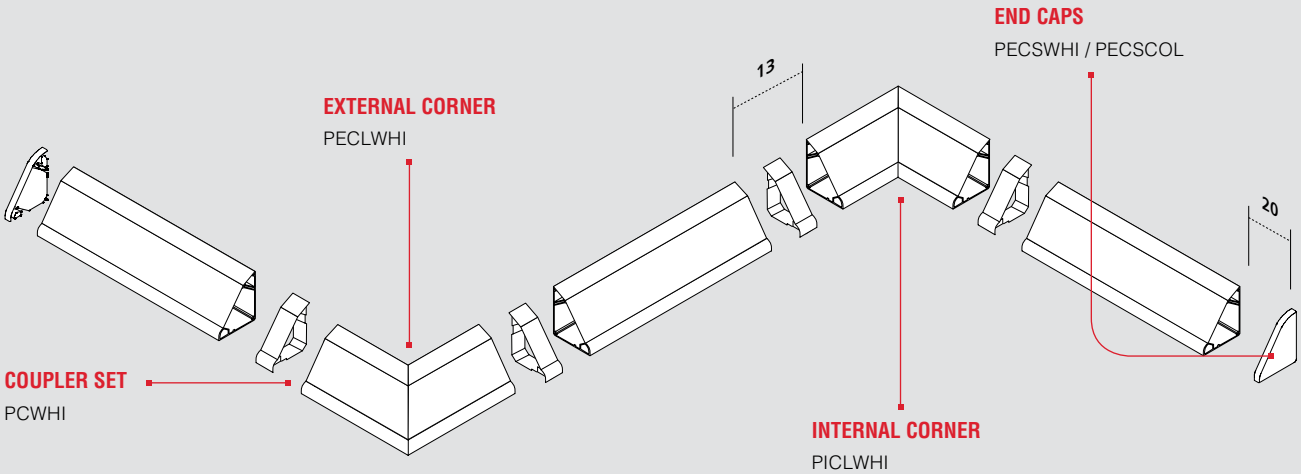

Pinnacle Technical

Installation Guide

GENERAL NOTES

Prior to installation strike a line of trunking using a plumb and chalk line for vertical, and spirit levels for horizontal runs.

INCOMING SUPPLY CABLES

1. Establish location of incoming cable supplies. Entry into the trunking can be from the back, base or end caps and is achieved by drilling up to a 25mm hole using the drill base centres in the trunking and inserting a conduit gland.
2. Holes of 20mm can be drilled into the end caps for access to the large compartment using one of a series of moulded drill centres.

FIXING

3. Trunking requires fixing at staggered centres, 250mm maximum along the length with the first and last fixing not more than 50mm from the end of each length. Drill trunking with 6mm holes using drill guides and fix with pan or round head screws and washers (Note: Tighten screws firmly and back off slightly to allow for movement). For double trunking installation fix both bases this way.
4. Couplers – Always use a trunking coupler and cover at the junction between each length and at corners to maintain IP4X Classification. To fix push the coupler carrier onto the end of the free trunking length. Slide up to fixed trunking and push home.
5. Internal and External Corners – Remove covers. Push a coupler onto each end and assemble to trunking. Position trunking and corner. Check that the internal corner base fits snugly into the corner. Fix trunking base as previously described.
6. End caps – Having located the length of trunking and cut if required push fit the end cap firmly onto the trunking ensuring that it is butted up tight. Note: where greater retention is required use MK adhesive EW PLUS to bond the end cap to the trunking base only. Avoid adhesive contact with covers.

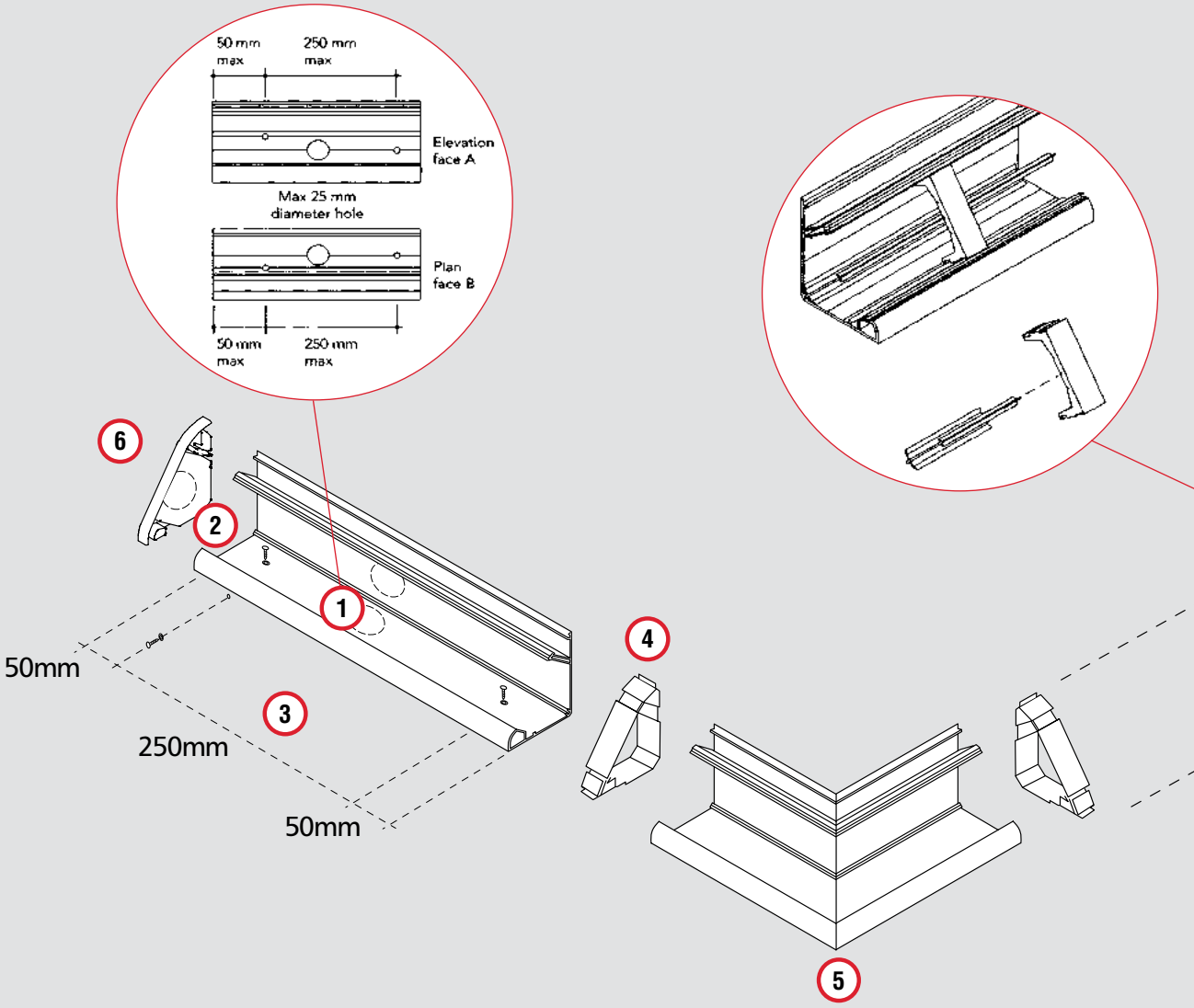

Pinnacle Technical

7 Cable Retainer without central divider installed.

8 The divider and cable retainer interlock should be installed together whenever the divider is used.

Divider – To achieve the correct fit a portion of the divider needs to be removed prior to fitting. The divider is formed with a series of depth gauge lines to assist when cutting. These also serve to determine the correct cut out when using outlet boxes. Having prepared the cut outs as required push fit the divider into the preformed groove in the internal corner of the trunking.

Cable Retainer – Incorporate as many cable retainers as required to provide restraint and support for cables. This is particularly critical when trunking is mounted overhead in a downward facing position. These should be no more than 600mm centres maximum and within 100mm of an end or corner. The cable retainer is supplied with a series of shallow slots. Use the centre slot to engage the outer cut edge of the cable divider. The legs of the cable retainer engage behind the projections within the large compartment.

9 Determine location of outlets and select correct depth box. Remove knockouts to suit cable entry. Push fit brass terminal (K3716) if required into the aperture in the base of the box.

10 Drill the large compartment walls using the drill guide groove to allow cables to feed when supplying from small compartment. Press and clip box into the trunking body engaging the rear projections. Note: Where dividers are installed they need to be reduced to accommodate the selected depth box. Adjacent boxes should not be more than 25mm apart.

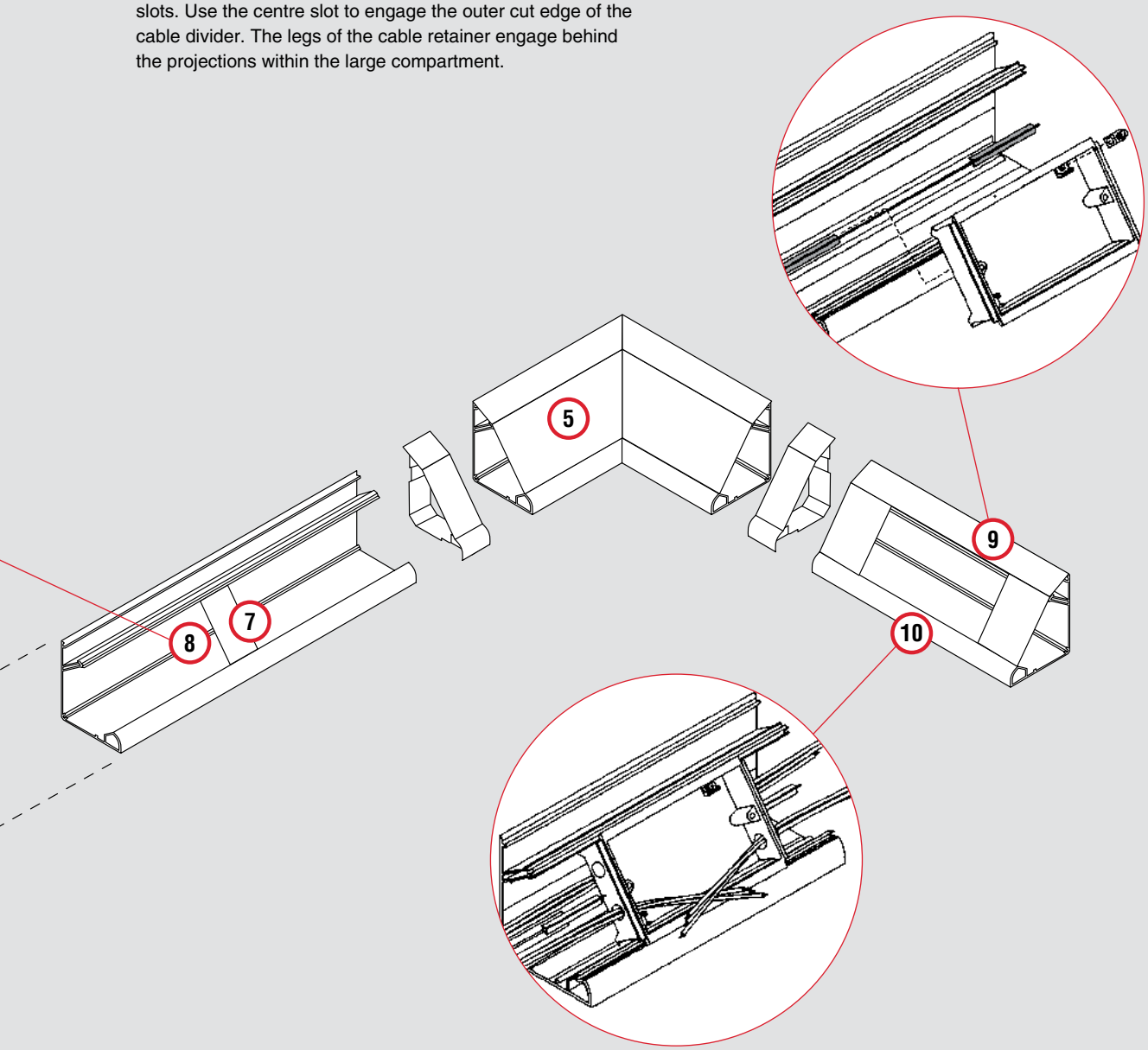

Pinnacle Technical

COVERS

11 Slide cover under end cap where required before locating correctly in position. Pushing firmly snap into place. The top cover in the double (back to back) trunking locks the two trunking bodies together.

12 Internal and external corner covers should be installed with couplers. Leave a gap of 13mm at the junction between corner cover and the trunking covers to allow fitting of coupler covers. Correctly position and snap firmly into place.

13 At joint couplers, overlap the coupler carrier flanges with the lids. The gap left between the covers will allow for the fitting of joint covers. Having satisfactorily installed all trunking covers firmly push fit the coupler covers into place overlapping all the cover completely.

14 Removal – Main compartment cover removal is readily achieved if a wiring accessory or coupler is present. Remove the accessory and exerting pressure to the underside of the cover with the head of a flat screwdriver to initiate disengagement, peel the cover back.

15 When no accessory is available remove a moulded coupler cover by placing the head of a small flat screwdriver at the junction with the trunking cover and lever outwards slowly disengaging the cover moulding. When levering off coupler covers protect trunking faces from damage. When the coupler cover is removed initiate clip disengagement of trunking covers and peel back.

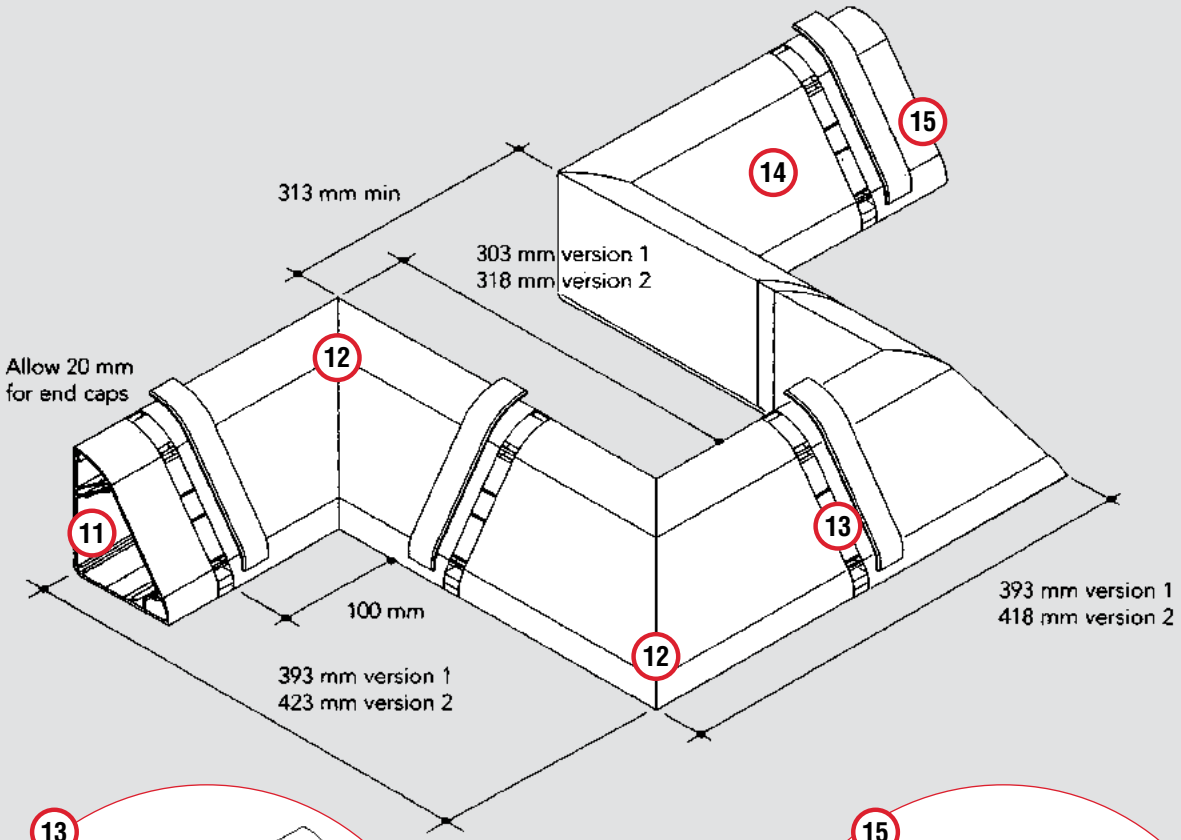

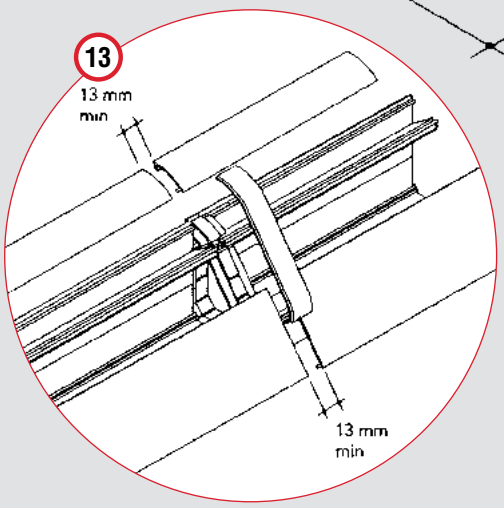

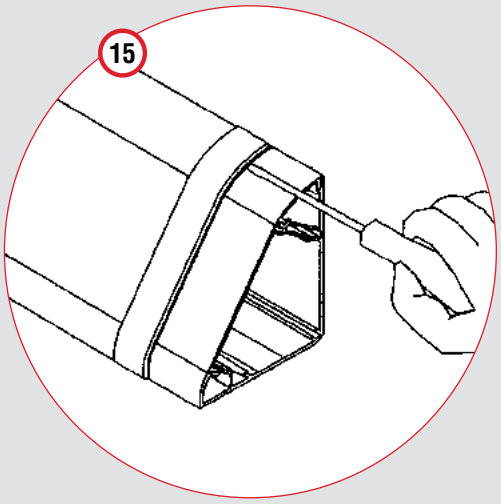

Integrated Trunking

TECHNICAL SPECIFICATION

MATERIALS
PVCu materials used in the manufacture of MK products are self extinguishing non-flame propagating in accordance with BS 4678 Part 4.

Extrusion material has been tested by a UKAS accredited laboratory in accordance with the requirements of BS 476 Part 7 and has achieved a Class 1Y.

Moulding material has been tested by a UKAS accredited laboratory and conforms with IEC 695-2-1 at a severity of 650°C

IET WIRING REGULATIONS
Designed and manufactured to comply in all respects with BS 7671:2008 (IET Wiring Regulations 17th Edition: 2008)

QUALITY ASSURANCE
The system is manufactured to BS EN ISO 9001

Classifications to BS EN 50085-1:2005 and BS EN 50085-2-1:2006 available on request

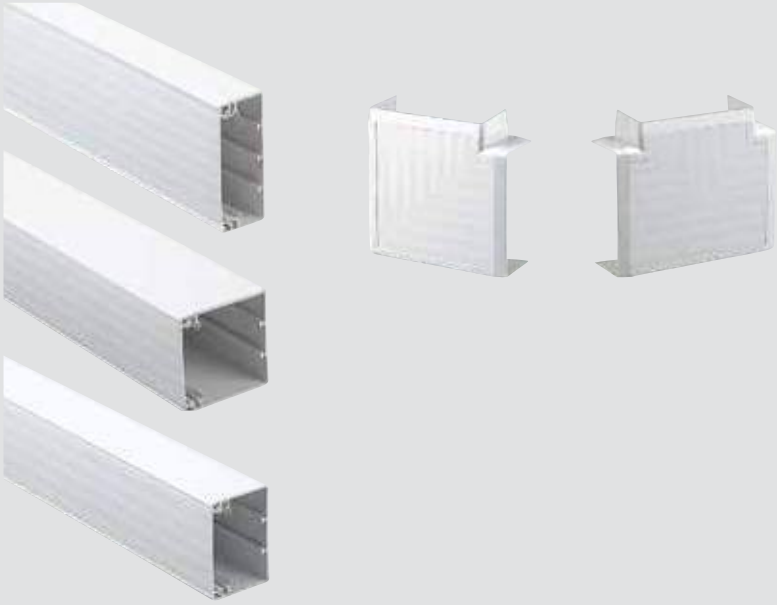

FEATURES

- Wide range of integrated components maximise versatility in application
- Simple, clean lines
- Easy to assemble and install
- Data bend option 32mm radius
- High impact resistance and durability
- Tapered joints provide complete protection at junctions masking cut ends
- Clip on covers provide continuous access for wiring modifications
- All extrusions manufactured from 100% recycled material*

Description

Premier is an integrated PVCu trunking system for general cable distribution. A comprehensive range of tees, angles and junctions make a very wide range of configurations possible and the system can be wall or ceiling mounted.

6 trunking sizes are available (see dimensions overleaf) offering the user distribution solutions, from incoming mains to the most remote power, telecom or data outlet.

Cable segregation (see figure 1) Each trunking profile incorporates a series of preformed locators which accept clip-in dividers for cable segregation. Clip-in components are provided for retaining cables within each compartment prior to trunking lids being fitted.

FINISH

Premier lid components are decoratively textured in contrasting linear patterns giving a subtle 'striped' effect.

All other components are in white with a semi matt finish.

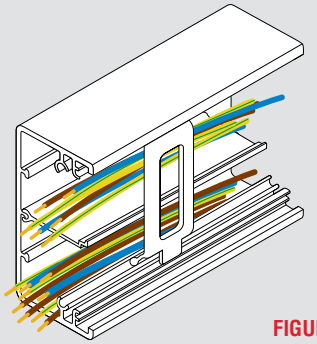

FIGURE 1

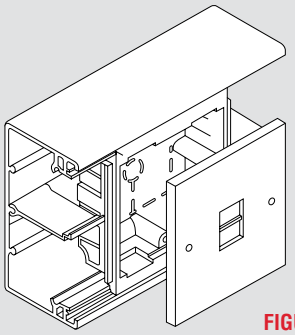

FIGURE 2

* Based on 2014 consumption

For a full range of corresponding products, see pages 338-343 in the product selector.

Premier Technical

Integrated Trunking

Dimensions (mm)

TRUNKING SYSTEMS

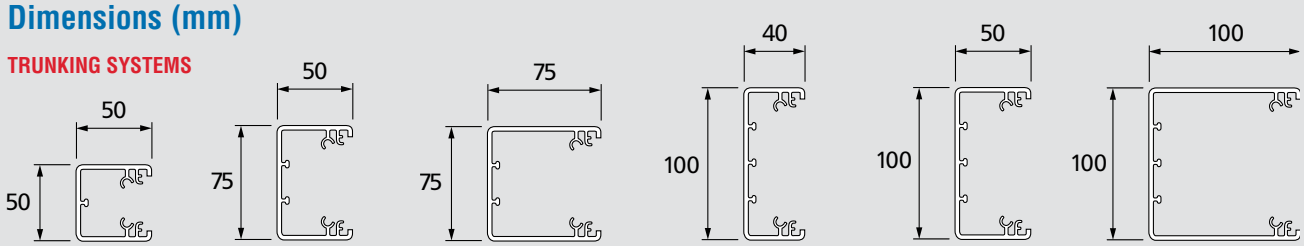

NCT5050 NCT7550 NCT7575 NCT1040 NCT1050 NCT1010

PREMIER CABLE CAPACITY

TYPE OF CONDUCTOR	SIZE	CABLE FACTOR	NCT5050	NCT7550	NCT7575	NCT1040	NCT1050	NCT1010	NCT1040 WITH 25MM BACKBOX	NCT1050 WITH 25MM BACKBOX	NCT1050 WITH 35MM BACKBOX	NCT1010 WITH 25MM BACKBOX	NCT1010 WITH 35MM BACKBOX
			Full Term CSA 100% Fill (MM²)										
			1881	3039	4754	3091	4041	8725	1081	1866	1224	6550	5908
			TERM AT 45% FILL (MM²)										
			846	1367	2139	1390	1818	3926	486	839	550	2947	2658
POWER CABLES			NUMBER OF CABLES AT 45% FILL										
PVC stranded	1.5mm²	8.6	98	158	248	161	211	456	56	97	63	342	309
	2.5mm²	12.6	67	108	169	110	144	311	38	66	43	233	210
	4mm²	16.6	50	82	128	83	109	236	29	50	33	177	160
	6mm²	21.2	39	64	100	65	85	185	22	39	25	139	125

DATA CABLES			NUMBER OF CABLES AT 45% FILL (A) AND FULL CAPACITY (B)																					
			A	B	A	B	A	B	A	B	A	B	A	B	A	B	A	B	A	B	A	B	A	B
Cat 5E UTP	5.5mm dia.	30.2	28	62	45	100	70	157	46	102	60	133	130	288	16	35	27	61	18	40	97	216	88	195
Cat 5E STP	6.0mm dia.	36.0	23	52	37	84	59	132	38	85	50	112	109	242	13	30	23	51	15	34	81	181	73	164
Cat 6 UTP	6.5mm dia.	42.2	20	44	32	72	50	112	32	73	43	95	93	206	11	25	19	44	13	29	69	155	62	140
Cat 6 STP	7.0mm dia.	49.0	17	38	27	62	43	97	28	63	37	82	80	178	9	22	17	38	11	24	60	133	54	120

Applications

The Premier system is ideal for use in factories, workshops, schools, portable accommodation and general commercial buildings where integration of cable distribution with accessory mounting facility is desirable.

Generally systems can be used as follows:

50 x 50, 75 x 50 and 75 x 75mm – general cable distribution.

100 x 40 and 100 x 50mm – where mounting accessories are also required.

100 x 100mm – where mounting accessories and/or generous cable distribution is required.

ACCESSORIES

	FOR USE WITH	LIST NO.
ONE GANG ACCESSORY BOX AND FRAME	NCT1040, NCT1050, NCT1010 for power and ELV outlets requiring 25mm deep box NCT1050/NCT1010 for power and ELV outlets requiring 35mm deep box NCT1040, NCT1050, NCT1010 for power and ELV outlets requiring extra deep accessory space	VTS6025
		VTS6035
		VTS6000
TWO GANG ACCESSORY BOX AND FRAME	NCT1040, NCT1050, NCT1010 for power and ELV outlets requiring 25mm deep box NCT1050/NCT1010 for power and ELV outlets requiring 35mm deep box NCT1040, NCT1050, NCT1010 for power and ELV outlets requiring extra deep accessory space	VTS7025
		VTS7035
		VTS7000
THREE GANG ACCESSORY BOX	NCT1040, NCT1050, NCT1010 for power and ELV outlets requiring 28mm deep box	VTS8028
MINI TRUNKING ADAPTOR	Integrates Premier with YEA1, YEA2, YEA3 CMA1, CMA3, CMA4 Mini trunking fittings	NYT100

Integrated Trunking

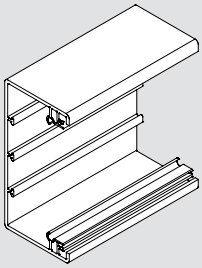

NCT1010

(Trunking is supplied with lid)

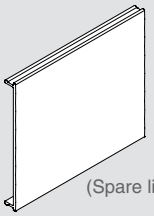

NCT1010LID

(Spare lid)

PROFILE	END CAP
50 x 50	NEP5050
75 x 50	NEP7550
75 x 75	NEP7575
100 x 40	NEP1040
100 x 50	NEP1050
100 x 100	NEP1010

PROFILE	INT CORNER	WITH DATA CORNER
50 x 50	NAI5050	
75 x 50	NAI7550	
75 x 75	NAI7575	
100 x 40	NAI1040	
100 x 50	NAI1050	NDAI1050
100 x 100	NAI1010	

PROFILE	FLAT TEE	WITH DATA CORNER
50 x 50	NTF5050	
75 x 50	NTF7550	
75 x 75	NTF7575	
100 x 40	NTF1040	
100 x 50	NTF1050	NDTF1050
100 x 100	NTF1010	

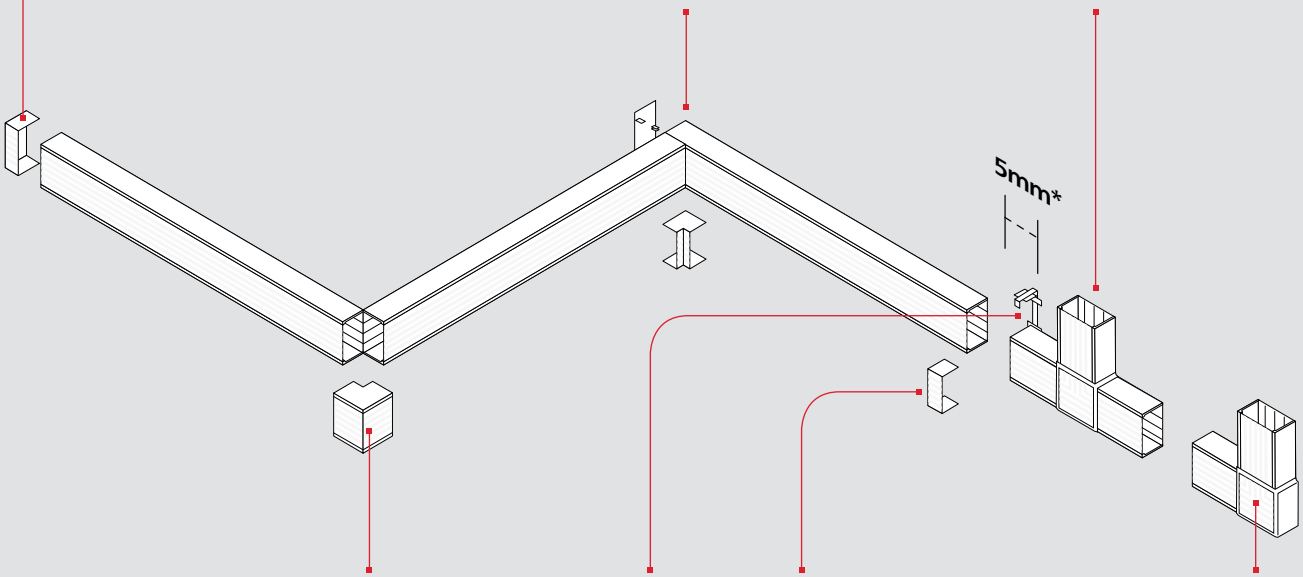

PROFILE	EXT CORNER	WITH DATA CORNER
50 x 50	NAE5050	
75 x 50	NAE7550	
75 x 75	NAE7575	
100 x 40	NAE1040	
100 x 50	NAE1050	NDAE1050
100 x 100	NAE1010	

PROFILE	INT COUPLER	JOINT COVER
50 x 50	NCI5050	NJC5050
75 x 50	NCI7550	NJC7550
75 x 75	NCI7575	NJC7575
100 x 40	NCI1040	NJC1040
100 x 50	NCI1050	NJC1050
100 x 100	NCI1010	NJC1010

PROFILE	FLAT ANGLE	WITH DATA CORNER
50 x 50	NAF5050	
75 x 50	NAF7550	
75 x 75	NAF7575	
100 x 40	NAF1040	
100 x 50	NAF1050	NDAF1050
100 x 100	NAF1010	

Note: Diagram shows profile 1050

* Minimum distance

Premier Technical

Integrated Trunking

Installation Guide

GENERAL NOTES

Prior to installation strike a line of trunking using a plumb and chalk line for vertical, and spirit levels for horizontal runs.

1. It may be advantageous to fit stop ends to trunking prior to installation. Where stop end could be subjected to lateral force the mounting clip should be solvent welded to the rail.
2. Drill Trunking with oversized holes in positions and at maximum centre shown.
3. Fix with dome head screws and fibre or rubber washers. Allow for expansion movement when tightening screws and between joints.
4. Internal coupler should be used to ensure correct alignment. Clip the coupler to the end of the free trunking length, offer up to the fixed trunking and slide home.
5. Minimum dimensions:

Trunking size mm	Dimension A (mm)
50 x 50	100
75 x 50	100
75 x 75	130
100 x 40	90
100 x 50	100
100 x 100	210

Fixing Centres (2)

For 50mm wide trunking use hole A.

For 100mm wide trunking use holes A and B.

For 75mm wide trunking drill single fixing on the centre line.

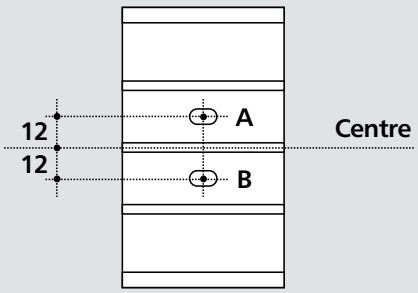

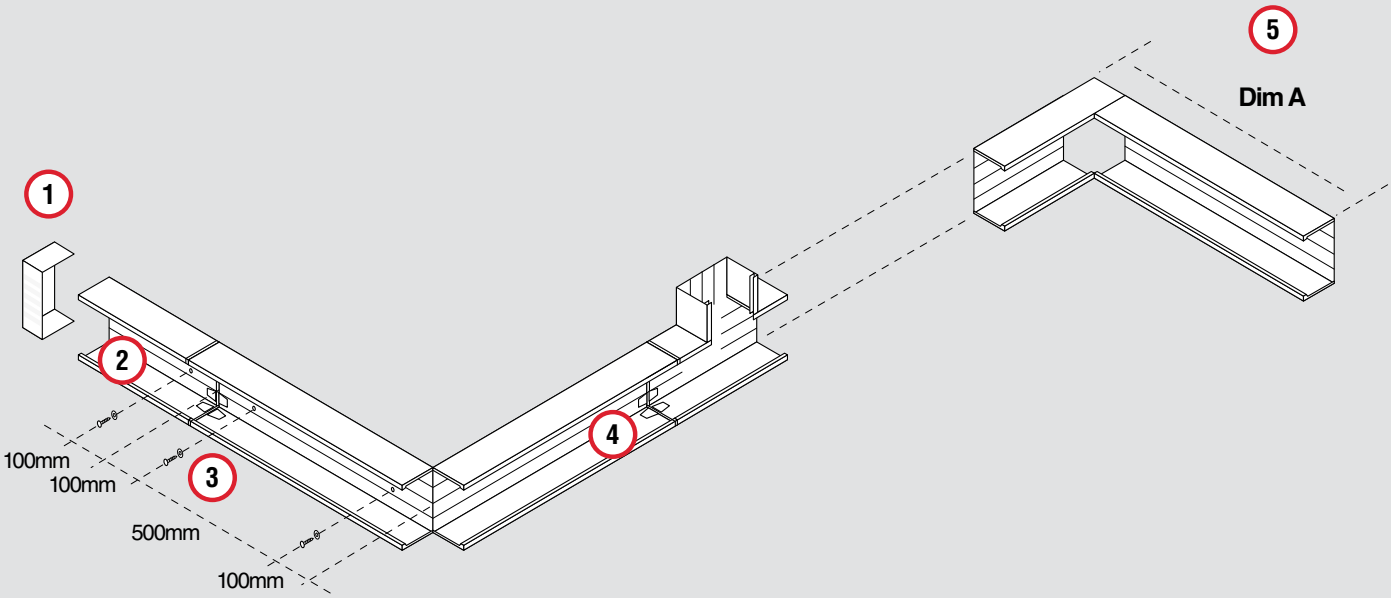

Integrated Trunking

Installation Guide Continued

8. Clip in cable dividers prior to cabling. Divider clip fits to the tee bar mounting rail extruded on the trunking base. To correctly fit divider, the extension foot of the female clip profile is mounted below the tee bar for horizontal runs, and to the right hand side of vertical runs.
9. Cable retainers clip into the semi-circular grooves extruded within the trunking profile. Retainers should be installed at 750mm maximum centres on straight runs or within 100mm of each end, corner or change of plane.
10. Internal corners – measure distance into corner and cut trunking length 2mm short.
11. Wall plates should be used to maintain enclosure function of trunking.
12. Leave a gap of 20mm to allow fitting of joint cover moulding.

AT INTERNAL CORNERS, EXTERNAL CORNERS, FLAT ANGLES AND FLAT TEES, LEAVE GAPS BETWEEN LIDS AND THE END TRUNKING BODY AS SHOWN BELOW:

		50X50	75X50	75X75	100X40	100X50	100X100
EXTERNAL CORNER	A	62	62	87	52	62	140
FLAT TEE	B	74	99	99	124	124	124
	C	65	90	90	115	115	115
INTERNAL CORNER	D	62	62	87	52	62	140
FLAT ANGLE	E	66	90	90	115	115	140

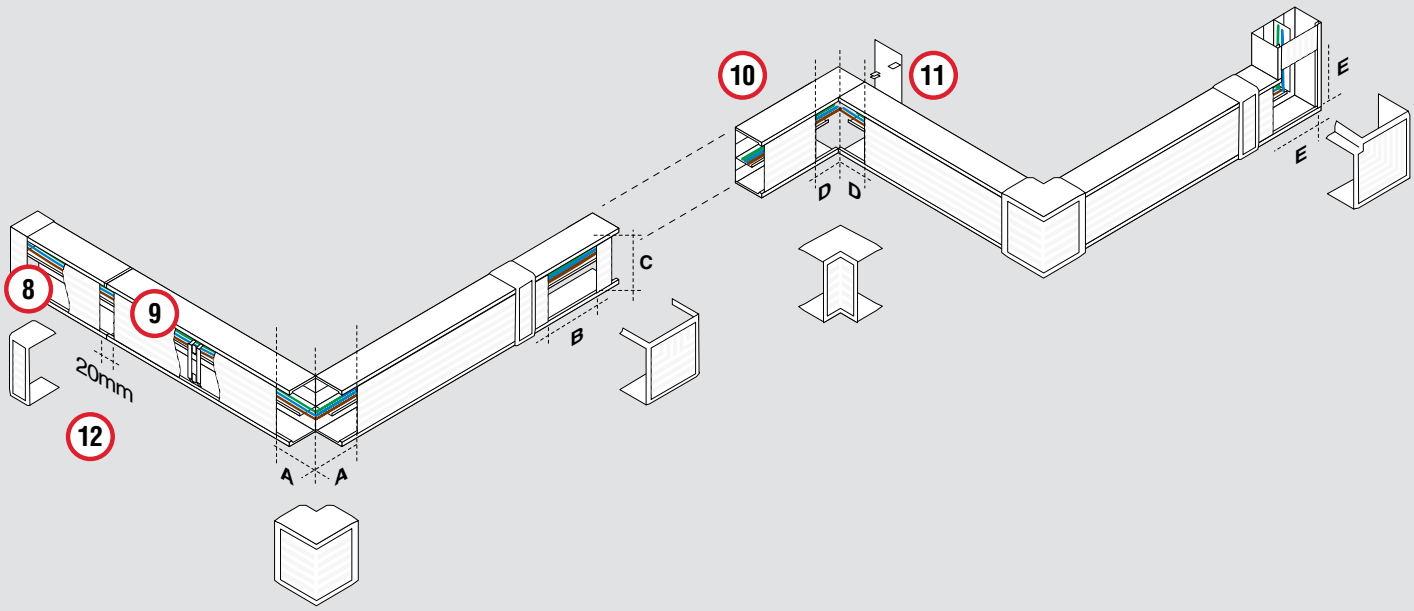

Norwich Technical

Trunking

TECHNICAL SPECIFICATION

MATERIALS
PVCu materials used in the manufacture of MK products are self extinguishing non-flame propagating in accordance with BS 4678 Part 4.

Extrusion material has been tested by a UKAS accredited laboratory in accordance with the requirements of BS 476 Part 7 and has achieved a Class 1Y.

Moulding material has been tested by a UKAS accredited laboratory and conforms with IEC 695-2-1 at a severity of 650°C

IET WIRING REGULATIONS
Designed and manufactured to comply in all respects with BS 7671:2008 (IET Wiring Regulations 17th Edition: 2008)

QUALITY ASSURANCE
The system is manufactured to BS EN ISO 9001

Classifications to BS EN 50085-1:2005 and BS EN 50085-2-1:2006 available on request

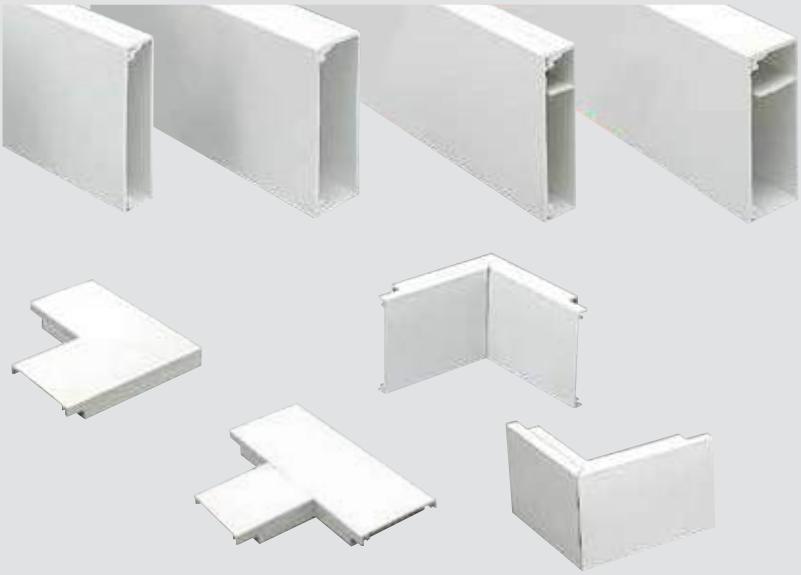

FEATURES

- 2 sizes with one or two compartments
- Easy to add sockets and outlets once installed
- Wall or ceiling mounting possible
- Wide range of integrated components maximises versatility of application
- Unobtrusive and neat
- Easy to assemble and install
- Durable and impact resistant to Heavy Classification BS 4678 Part 4
- All extrusions manufactured from 100% recycled material*

Description

Norwich trunking is available in two depths with one or two compartments for wall or ceiling mounting.

The standard version is 40mm deep with a 25mm deep option, where lack of space makes the projection critical. Accessory mounting frames are located within the trunking, providing a visually co-ordinated system with the facility to relocate and extend accessory outlet positions as required.

The system is widely used in schools, offices and commercial installations because of its durability and the ability to retrofit extra sockets and outlets as required.

Material: PVCu **Colour:** White only

* Based on 2014 consumption

For a full range of corresponding products, see pages 344-345 in the product selector.

Trunking

Dimensions (mm)

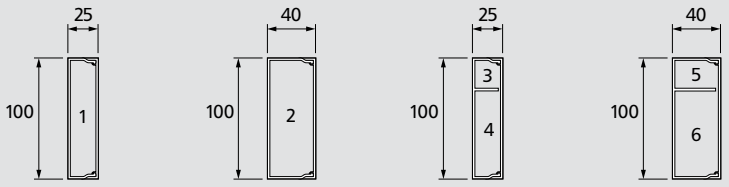

NBT3 NBT4 NBT3TC NBT4TC

PREMIER CABLE CAPACITY														
TYPE OF CONDUCTOR	SIZE	CABLE FACTOR	NBT3 (1)		NBT3TC (3)		NBT3TC (4)		NBT4 (2)		NBT4TC (5)		NBT4TC (6)	
			Full Term CSA 100% Fill (MM²)											
			1805		384		1383		3230		706		2455	
			TERM AT 45% FILL (MM²)											
			812		172		622		1453		317		1104	
POWER CABLES			NUMBER OF CABLES AT 45% FILL											
PVC stranded	1.5mm²	8.6	94		20		72		168		36		128	
	2.5mm²	12.6	64		13		49		115		25		87	
	4mm²	16.6	48		10		37		87		19		66	
	6mm²	21.2	38		8		29		68		14		52	
DATA CABLES			NUMBER OF CABLES AT 45% FILL (A) AND FULL CAPACITY (B)											
			A	B	A	B	A	B	A	B	A	B	A	B
Cat 5E UTP	5.5mm dia.	30.2	26	59	5	12	20	45	48	106	10	23	36	81
Cat 5E STP	6.0mm dia.	36.0	22	50	4	10	17	38	40	89	8	19	30	68
Cat 6 UTP	6.5mm dia.	42.2	19	42	4	9	14	32	34	76	7	16	26	58
Cat 6 STP	7.0mm dia.	49.0	16	36	3	7	12	28	29	65	6	14	22	50

Note: NBT3 & NBT3TC are not deemed suitable for terminating Cat6 cabling.

Components

The four components shown opposite are fabricated sections and space must be allowed for inclusion in runs of trunking. All other components snap on over standard trunking profiles.

LIST NO.	COMPONENT DIMENSIONS			
	A	B	C	D
NBT3	240	170	125	125
NBT4	240	170	140	140

The four components shown below are fabricated sections and space must be allowed for inclusion in runs of trunking.

All other components snap on over standard trunking profiles.

FLAT TEE

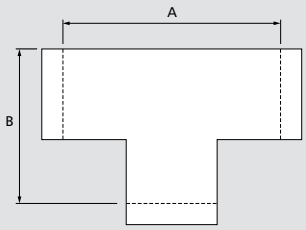

EXTERNAL CORNER

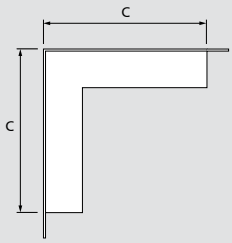

FLAT ANGLE

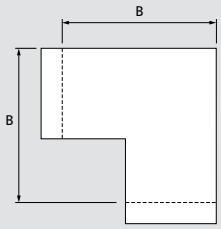

INTERNAL CORNER

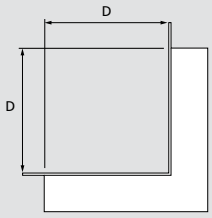

Norwich Technical

Trunking

Installation Guide

General notes

Prior to installation strike a line of trunking using a plumb and chalk line for vertical, and spirit levels for horizontal runs.

Fixing

1. Cut and fix the continuous carrier at not more than 500mm centres along its entire length and not more than 100mm from the end of a run, and at intersection with other systems.
2. Locate and secure, with a minimum of two screws, the carrier for flat angles, external angles, internal angles and flat tees.
3. Close butt to the carrier using internal couplers – see 5.

Cable segregation

4. Further segregation within the single or two compartment trunking can be achieved during or following the installation by inserting the appropriate size of Mini-trunking sections. Fit the socket insertion units, install the conductors and cable runs and draw the conductors through. Fix the clip on cover using the back up couplers at the intersections.
5. The couplers can also serve as cable retaining straps prior to the cover being fitted. Stagger the joints in the cover with the joints in the carrier and offset by 50mm. Bond the end stop to the main trunking using
Egaweld PLUS solvent weld

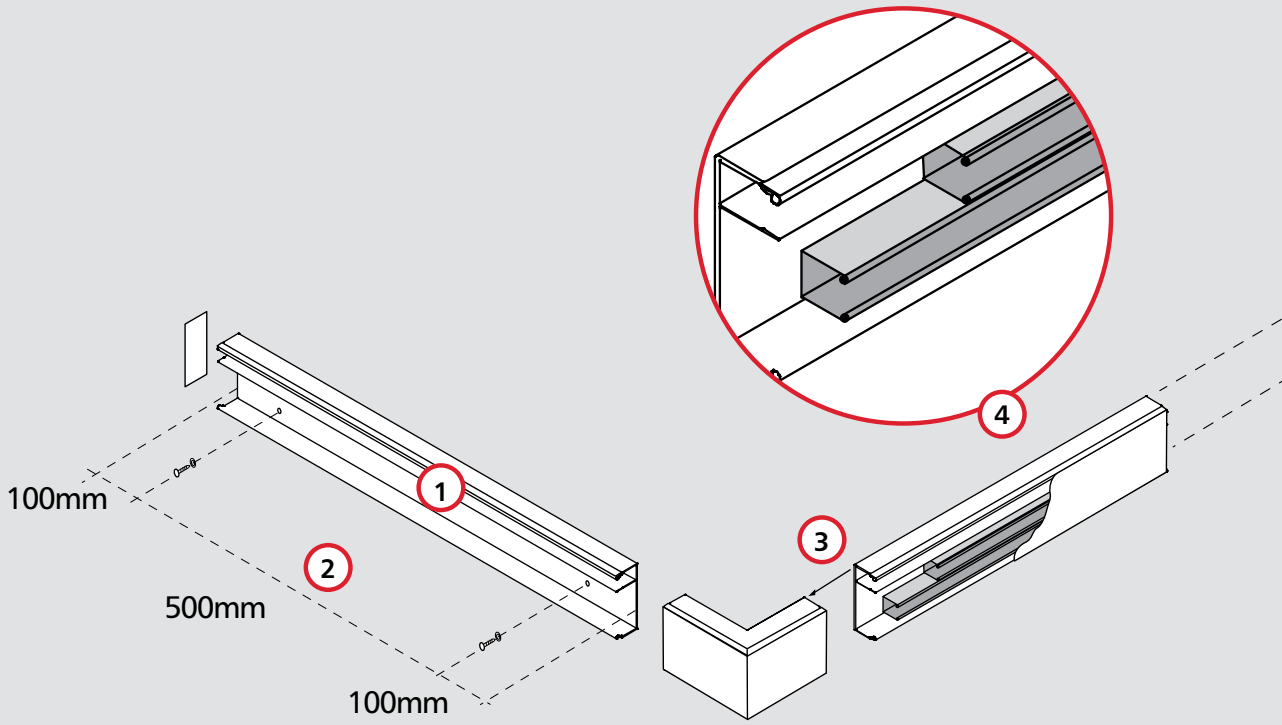

Trunking

Junction with Mini-trunking

6 Locate the position of the junction. Drill the carrier with the correct sized hole to accommodate the number of cables required. Position the correct UEA/-adaptor using a short length of compatible Mini-trunking as a guide.

The trunking should stop 6mm from the face of the Norwich trunking to allow the adaptor to fit tight. Bond the adaptor to the Norwich trunking using Egaweld PLUS solvent weld

Remove the temporary trunking guide and proceed with the installation.

Cover

7 Covers simply clip onto base.

Accessories

8 The 'clip on' accessory mounting frames will accept most standard one and two gang socket plates and socket mounting with back box enables telephone circuitry to be segregated from other services.

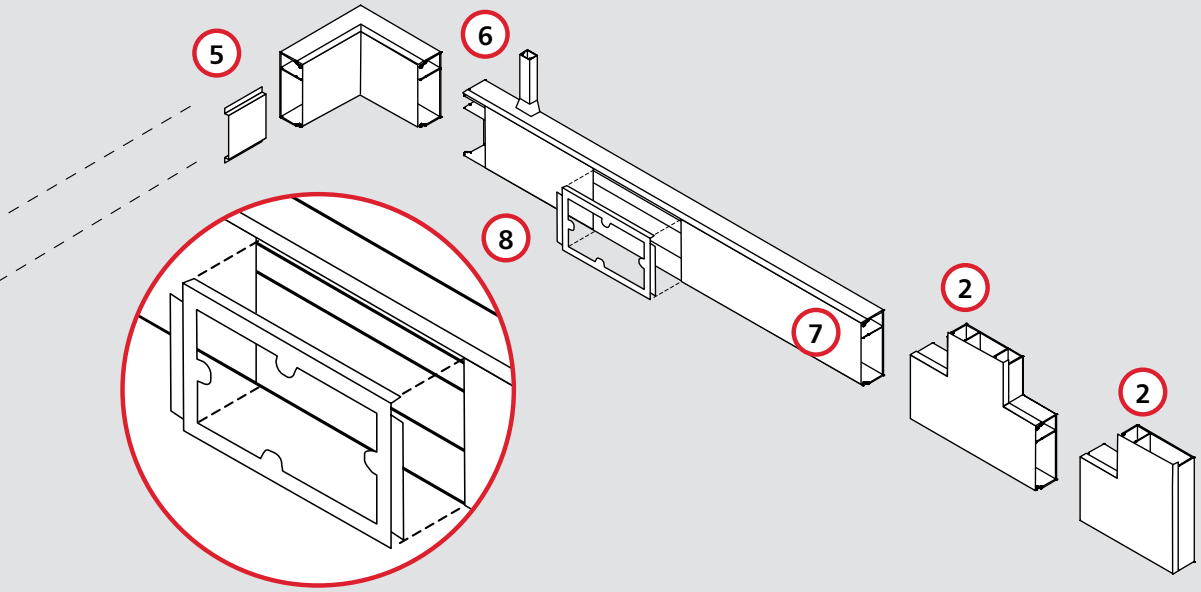

Norwich Technical

Trunking

Component Selection Guide

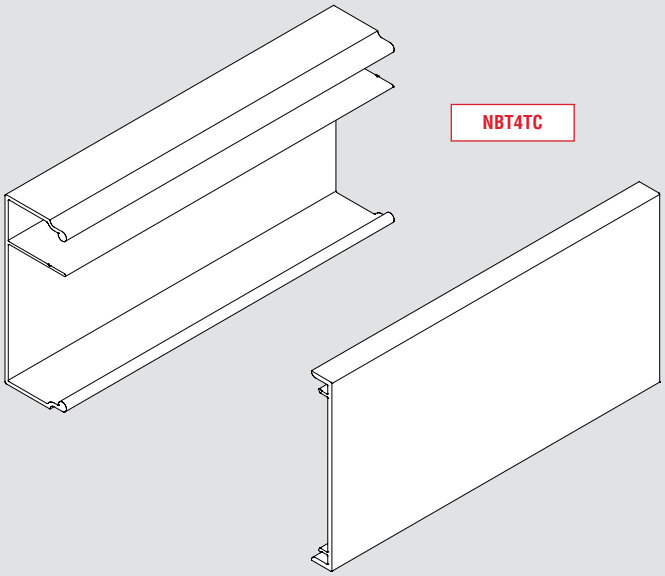

PROFILE	FLAT ANGLE
SINGLE	
100 x 25mm (NBT3)	NAF3
100 x 40mm (NBT4)	NAF4
TWIN – COMPARTMENT TO OUTSIDE	
100 x 25mm (NBT3TC)	NAF3TC
100 x 40mm (NBT4TC)	NAF4TC
TWIN – COMPARTMENT TO INSIDE	
100 x 25mm (NBT3TC)	NAF3TCSI
100 x 40mm (NBT4TC)	NAF4TCSI

PROFILE	END CAP
100 x 25mm (NBT3 & NBT3TC)	NEP3
100 x 40mm (NBT4 & NBT4TC)	NEP4

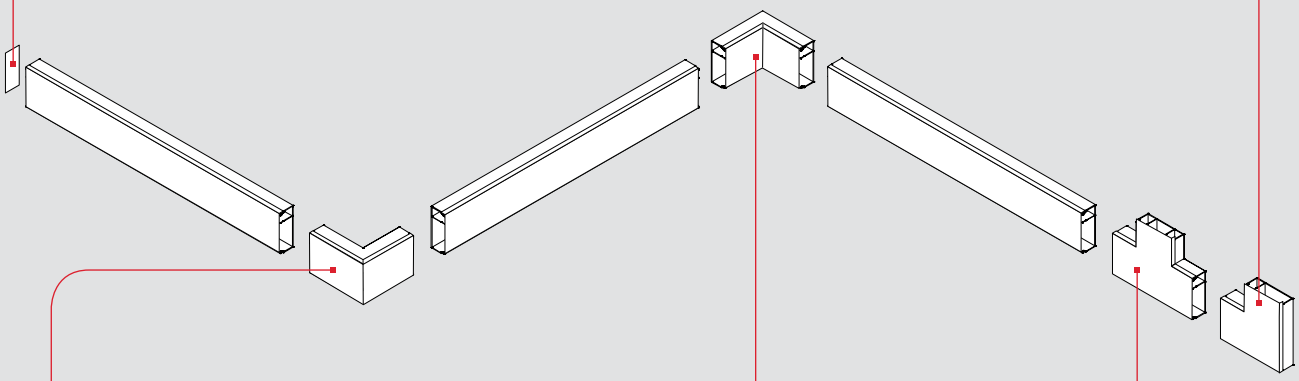

PROFILE	EXT CORNER
100 x 25mm (NBT3)	NAE3
100 x 40mm (NBT4)	NAE4
100 x 25mm (NBT3TC)	NAE3TC
100 x 40mm (NBT4TC)	NAE4TC

PROFILE	INT CORNER
100 x 25mm (NBT3)	NAI3
100 x 40mm (NBT4)	NAI4
100 x 25mm (NBT3TC)	NAI3TC
100 x 40mm (NBT4TC)	NAI4TC

PROFILE	FLAT TEE
100 x 25mm (NBT3)	NTF3
100 x 40mm (NBT4)	NTF4
100 x 25mm (NBT3TC)	NTF3TC
100 x 40mm (NBT4TC)	NTF4TC

PRODUCT APPLICATION

ECHO SWITCH (TRANSMITTER)

Echo™ is an innovative range of entirely wireless, batteryless and self-powered switches and controls. Being wireless offers fantastic benefits, including instant installation and location flexibility. This reduces disruption and cost as there is no need to channel walls and run switching cables.

Ega Industrial Technical

Industrial Trunking

TECHNICAL SPECIFICATION

MATERIALS
PVCu materials used in the manufacture of MK products are self extinguishing non-flame propagating in accordance with BS 4678 Part 4.

Extrusion material has been tested by a UKAS accredited laboratory in accordance with the requirements of BS 476 Part 7 and has achieved a Class 1Y.

Moulding material has been tested by a UKAS accredited laboratory and conforms with IEC 695-2-1 at a severity of 650°C

IET WIRING REGULATIONS
Designed and manufactured to comply in all respects with BS 7671:2008 (IET Wiring Regulations 17th Edition: 2008)

QUALITY ASSURANCE
The system is manufactured to BS EN ISO 9001

Classifications to BS 4678-4:1982 available on request

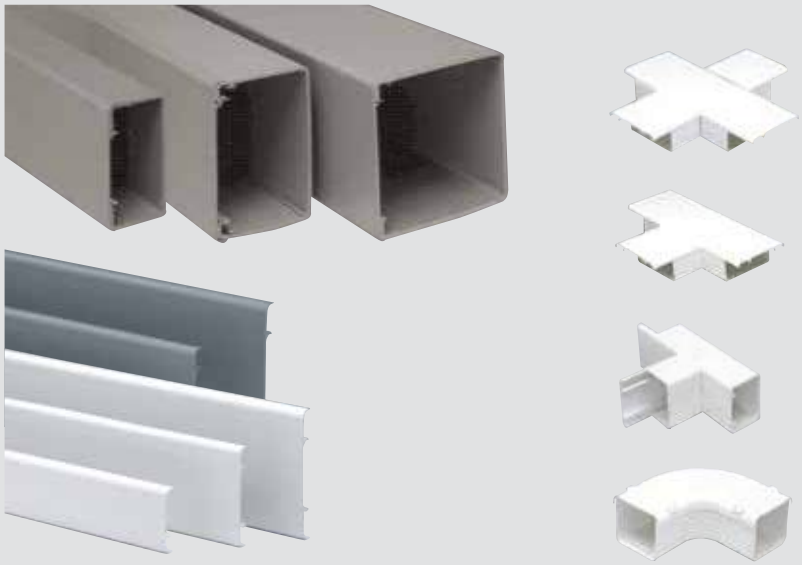

Features

- Wide range of trunking sizes and capacity
- Wide range of integrated components maximises versatility of application
- Available in white or grey
- Extremely durable and impact resistant to Heavy Classification BS 4678, Part 4
- Easy to assemble and install
- All trunking fittings are supplied plain without couplings to avoid wastage
- External couplings strengthen the trunking and internal coupling pieces
- All extrusions manufactured from 100% recycled material*

Specified sizes, pages 346-347.

Description

Ega Industrial trunking is a PVCu heavy duty system available in white or grey, used extensively for industrial wiring purposes. It is available in a large variety of sizes and has found wide acceptance throughout the world. Its durability, safety and strength are well proven.

Nine basic sizes are available ranging from 50 x 50 mm to 150 x 150 mm complete with a comprehensive variety of fittings. The trunkings have a simple clip on cover which positively locates when hand pressure is applied and enables fast, efficient installation.

* Based on 2014 consumption

For a full range of corresponding products, see pages 346-347 in the product selector.

Ega Industrial Technical

Industrial Trunking

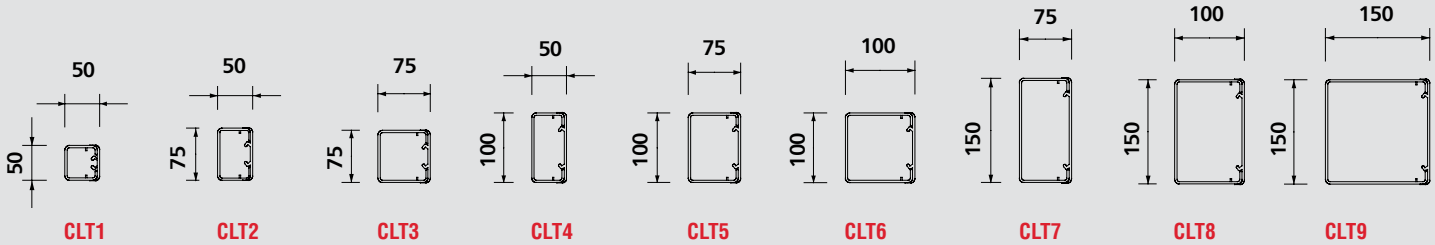

EGA INDUSTRIAL CABLE CAPACITY																				
TYPE OF CONDUCTOR	SIZE	CABLE FACTOR	CLT1		CLT2		CLT3		CLT4		CLT5		CLT6		CLT7		CLT8		CLT9	
			Full Term CSA 100% Fill (mm²)																	
			2130		3312		5117		4408		6841		9270		10446		14175		21566	
			Term at 45% Fill (mm²)																	
			958		1490		2302		1983		3078		4171		4700		6378		9704	
Power Cables			Number of Cables at 45% Fill																	
PVC Stranded	1.5mm²	8.6	111		173		267		230		357		485		546		741		1128	
	2.5mm²	12.6	76		118		182		157		244		331		373		506		770	
	4mm²	16.6	57		89		138		119		185		251		283		384		584	
	6mm²	21.2	45		70		108		93		145		196		221		300		457	
Data Cables			Number of Cables at 45% fill (a) and Full Capacity (b)																	
			a	b	a	b	a	b	a	b	a	b	a	b	a	b	a	b	a	b
Cat5E UTP	5.5mm dia.	30.2	31	70	49	109	76	169	65	145	101	226	138	306	155	345	211	469	321	714
Cat5E STP	6.0mm dia.	36.0	26	59	41	92	63	142	55	122	85	190	115	257	130	290	177	393	269	599
Cat6 UTP	6.5mm dia.	42.2	22	50	35	78	54	121	46	104	72	162	98	219	111	247	151	335	229	511
Cat6 STP	7.0mm dia.	49.0	19	43	30	67	46	104	40	89	62	139	85	189	95	213	130	289	198	440

Ega Industrial Technical

Industrial Trunking

Components

The following components are fabricated sections and space must be allowed for inclusion in runs of trunking. All other components fit over standard trunking profiles.

FLAT TEE (FTF)

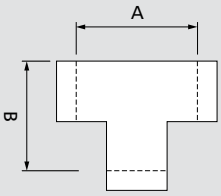

FLAT CROSS (FCU)

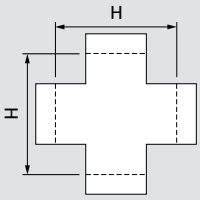

FLAT ANGLE (FAF)

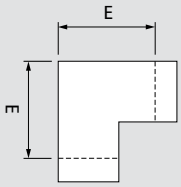

INTERNAL CORNER (FAI)

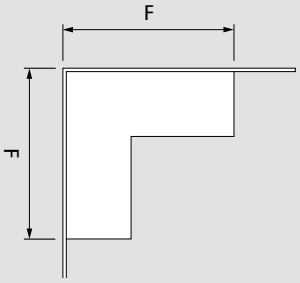

EXTERNAL CORNER (FAE)

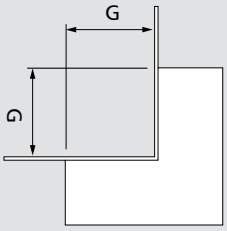

Dimensions

LIST. NO.	COMPONENTS DIMENSIONS (mm)					
CLT/	A	B	E	F	G	H
CLT1	*100	*90	*80	*125	*65	*100
CLT2	*150	*115	115	110	60	*150
CLT3	*150	*115	*115	150	75	*150
CLT4	220	160	160	110	60	220
CLT5	250	175	175	150	75	250
CLT6	250	175	175	175	75	250
CLT7	330	240	240	165	90	330
CLT8	380	265	265	215	115	380
CLT9	380	265	265	265	115	380

* indicates moulded items

Component Selection Guide

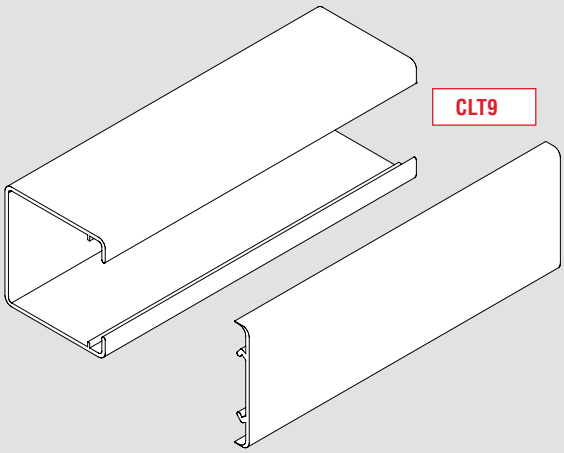

Ega Industrial Technical

Industrial Trunking

Component Selection Guide

PROFILE	END CAP
CLT1	TEP1
CLT2	TEP2
CLT3	TEP3
CLT4	TEP4
CLT5	TEP5
CLT6	TEP6
CLT7	TEP7
CLT8	TEP8
CLT9	TEP9

PROFILE	INT CORNER	X (mm)
CLT1	FAI1	125
CLT2	FAI2	110
CLT3	FAI3	150
CLT4	FAI4	110
CLT5	FAI5	150
CLT6	FAI6	175
CLT7	FAI7	165
CLT8	FAI8	215
CLT9	FAI9	265

PROFILE	FLAT ANGLE		Z (mm)
	MOULDED	FABRICATED	
CLT1	FAF1		125
CLT2	FAF2		110
CLT3	FAF3		150
CLT4		FAF4	110
CLT5		FAF5	150
CLT6		FAF6	175
CLT7		FAF7	165
CLT8		FAF8	215
CLT9		FAF9	265

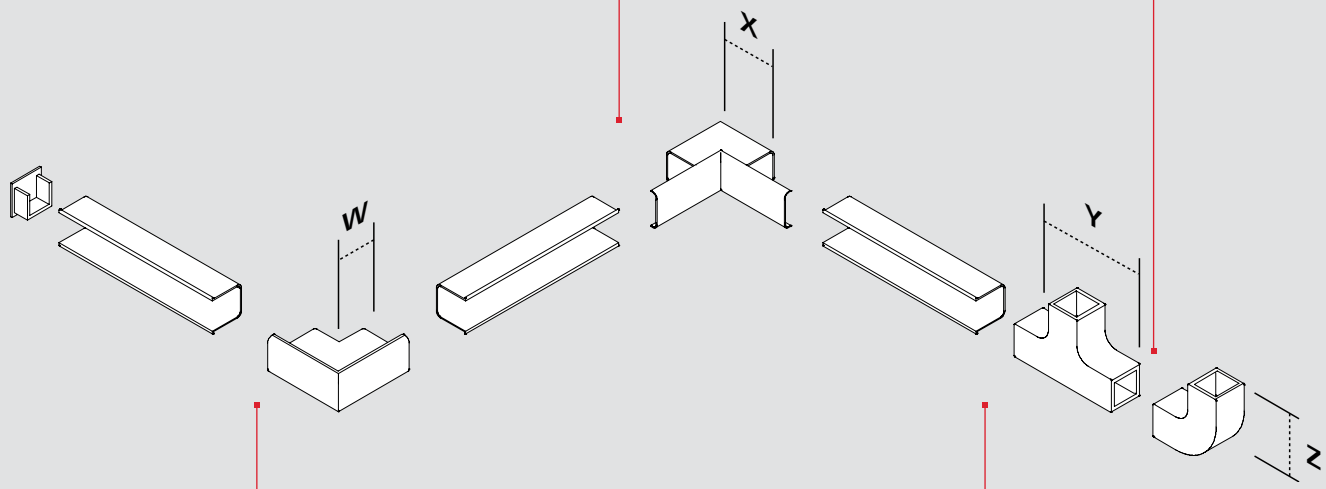

PROFILE	EXT CORNER	W (mm)
CLT1	FAE1	65
CLT2	FAE2	60
CLT3	FAE3	75
CLT4	FAE4	60
CLT5	FAE5	75
CLT6	FAE6	75
CLT7	FAE7	90
CLT8	FAE8	115
CLT9	FAE9	115

PROFILE	FLAT TEE		Y (mm)
	MOULDED	FABRICATED	
CLT1	FTF1		170
CLT2	FTF2		170
CLT3	FTF3		225
CLT4		FTF4	170
CLT5		FTF5	225
CLT6		FTF6	250
CLT7		FTF7	255
CLT8		FTF8	330
CLT9		FTF9	380

Ega Industrial Technical

Industrial Trunking

Installation Guide

General notes

Prior to installation strike a line of trunking using a plumb and chalk line for vertical, and spirit levels for horizontal runs.

Fixing

1. Fix trunking with screws. It is essential that the hole in the trunking is considerably oversized to allow for expansion.
2. Washers should be used under the head of the screw. The screw should not be tightened to its full extent to allow for movement.
3. For suspended trunking it is advisable to provide fixings every 1.25 m to 1.5 m and a maximum of 100mm either side of coupling.
4. Trunking and lid joints should be staggered to increase the strength of couplings.

Fixing lids

5. Fix lid by sliding it onto the trunking at one end, aligning it to the run of trunking and then curving the cover at the same time as pressing the continuous clip into the trunking gap.
6. To remove lid grasp the trunking firmly at one end and pull in peeling motion so that the cover is gradually freed along its whole length.

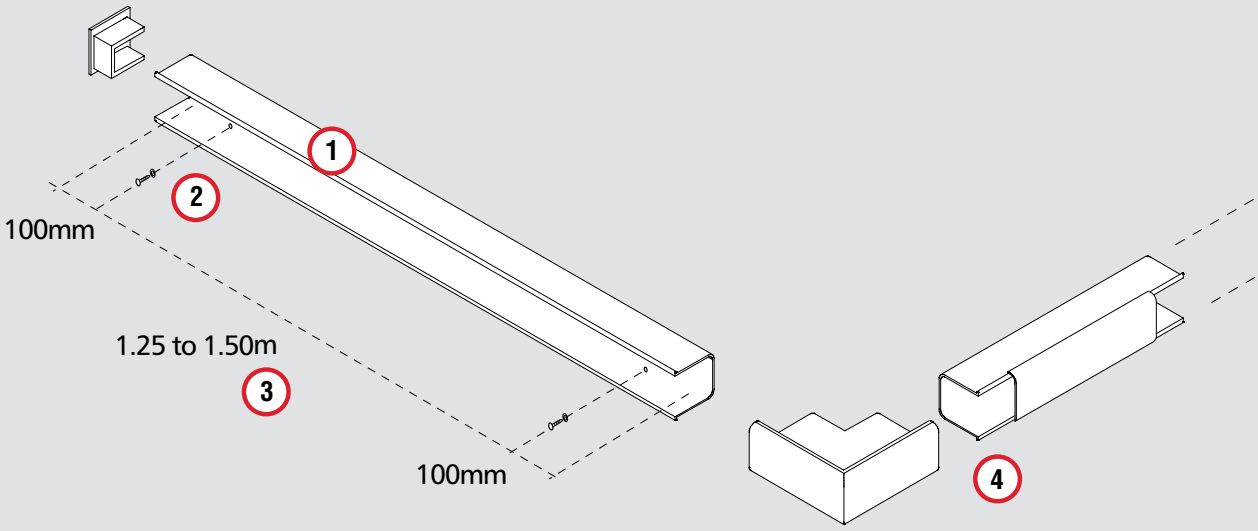

Industrial Trunking

Joining fittings

7. Drill trunking with a 7.2mm drill. Bridge pieces are available for retaining the cable in the trunking and the special corrugated shape allows them to be used as a support for dividing fillets required within the trunking.
8. External couplings are fitted by means of the special plastic rivet (ref: TPR/1). To connect couplings to trunking the trunking must be drilled centrally, size 7.2mm, and the rivet inserted.
9. Economical joints can be made using a vinyl adhesive tape especially where added strength is obtained by the lid and trunking being joined in different positions. The joint created is weather resistant and is ideal for surface installation and in conditions of wide temperature variations.

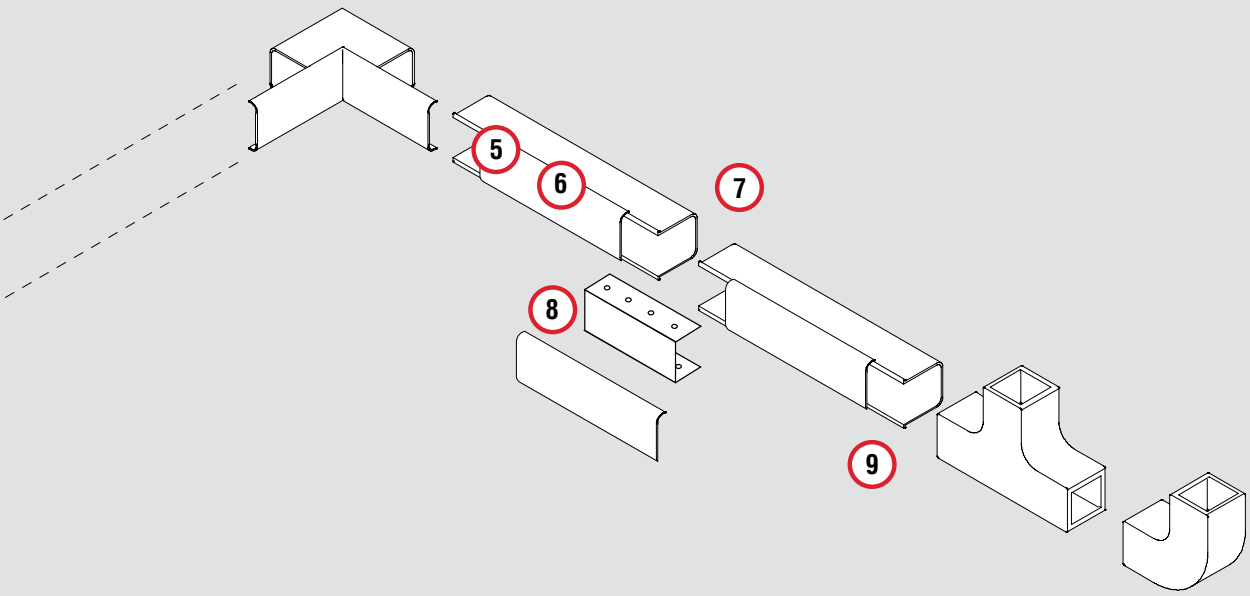

Ega Cornice Technical

Cornice Trunking

TECHNICAL SPECIFICATION

MATERIALS
PVCu materials used in the manufacture of MK products are self extinguishing non-flame propagating in accordance with BS 4678 Part 4.

Extrusion material has been tested by a UKAS accredited laboratory in accordance with the requirements of BS 476 Part 7 and has achieved a Class 1Y.

Moulding material has been tested by a UKAS accredited laboratory and conforms with IEC 695-2-1 at a severity of 650°C

IET WIRING REGULATIONS
Designed and manufactured to comply in all respects with BS 7671:2008 (IET Wiring Regulations 17th Edition: 2008)

QUALITY ASSURANCE
The system is manufactured to BS EN ISO 9001

Classifications to BS EN 50085-1:2005 and BS EN 50085-2-1:2006 available on request

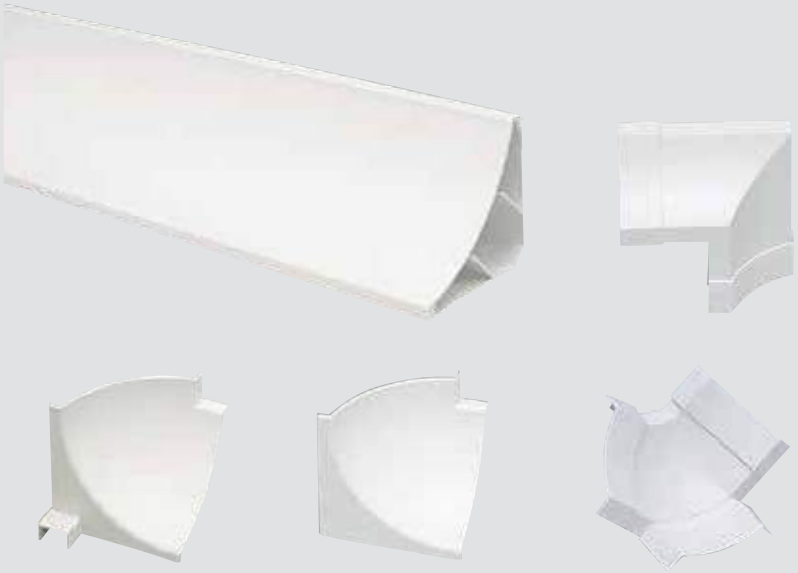

Features

- Two trunking profiles
- Wide range of integrated components maximises versatility of application
- Fully compatible with Ega Mini Trunking systems
- Neat and unobtrusive
- Accessories designed to overlap edge of trunking cover, hiding joint line
- Easy to assemble and install
- Durable and impact resistant to Medium Classification BS 4678 Part 4
- All extrusions manufactured from 100% recycled material*

Description

Ega Standard and Compact Cornice Trunking Systems are manufactured from PVCu. They are designed to be mounted on interior surfaces, at the interface of wall and ceiling for the protection of electrical cables.

Standard trunking consists of a base, containing three separate compartments, and a common cover. Compact trunking has a single compartment.

Both types are compatible with Ega Mini Trunking.

The smaller, single compartment trunking is ideal for domestic rewires, whereas the larger three compartment trunking is best suited to commercial and sheltered housing applications.

Various types of services can be accommodated, such as mains wiring, lighting circuits, alarm warden call systems and data.

The system is available in a standard white colour.

* Based on 2014 consumption

For a full range of corresponding products, see pages 348-349 in the product selector.

Ega Cornice Technical

EGA CORNICE CABLE CAPACITY								
TYPE OF CONDUCTOR	SIZE	CABLE FACTOR	CT1		CT2 CMPT 1		CT2 CMPT 2	
			Full Term CSA 100% Fill (mm²)					
			755		636		1441	
			Term at 45% Fill (mm²)					
			339		286		648	
Power Cables			Number of Cables at 45% Fill					
PVC Stranded	1.5mm²	8.6	39		33		75	
	2.5mm²	12.6	26		22		51	
	4mm²	16.6	20		17		39	
	6mm²	21.2	15		13		30	
Data Cables			No. of Cables at 45% Fill (a) and Full Capacity (b)					
			a	b	a	b	a	b
Cat5E UTP	5.5mm dia.	30.2	11	25	9	21	21	47
Cat5E STP	6.0mm dia.	36.0	9	20	7	17	18	40
Cat6 UTP	6.5mm dia.	42.2	8	17	6	15	15	34
Cat6 STP	7.0mm dia.	49.0	6	15	5	12	13	29

Dimensions (mm)

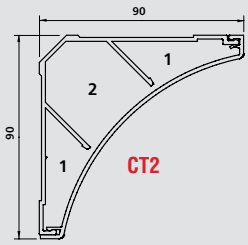

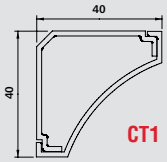

Component Selection Guide (dimensions in mm)

PROFILE	JOINT COVER
40 x 40mm (CT1)	CJC1
90 x 90mm (CT2)	CJC2

PROFILE	MINI TRUNKING ADAPTOR
40 x 40mm (CT1)	CA1
90 x 90mm (CT2)	CA2

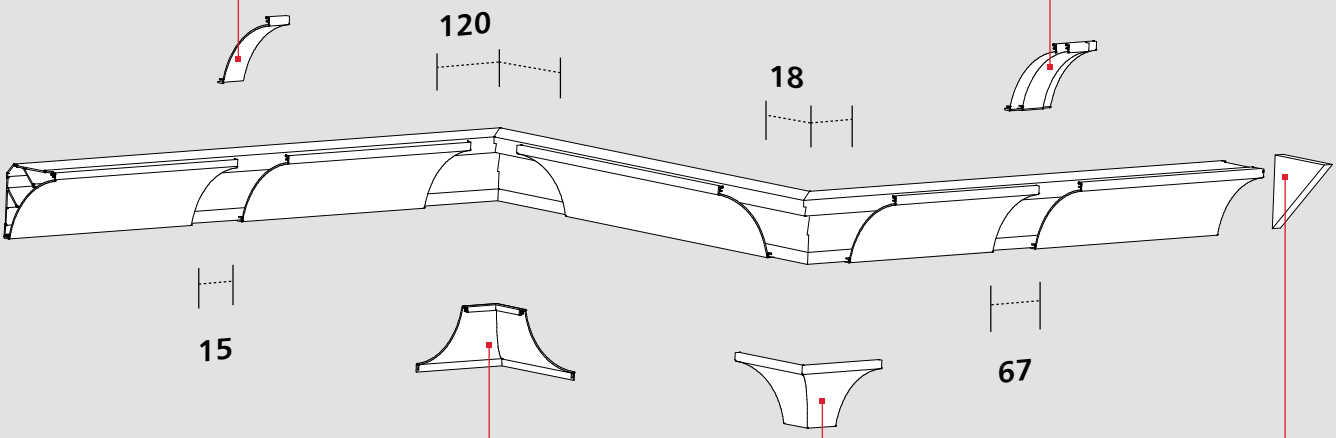

PROFILE	INT CORNER
40 x 40mm (CT1)	CIP1
90 x 90mm (CT2)	CIP2

PROFILE	EXT CORNER
40 x 40mm (CT1)	CXP1
90 x 90mm (CT2)	CXP2

PROFILE	END CAP
40 x 40mm (CT1)	CEP1
90 x 90mm (CT2)	CEP2

Ega Cornice Technical

Cornice Trunking

Installation Guide

General notes

Prior to installation strike a line of trunking using a plumb and chalk line for vertical, and spirit levels for horizontal runs.

1 Installation

a Separate the cover from the backing. Measure the walls and cut trunking base to length making due allowance for external corner mitres. Fix base to wall/ceiling using woodscrews or bolts, with large washers. Oversized holes must be drilled to allow for expansion.

b The base should be fixed to both wall and ceiling at 500mm intervals giving a staggered arrangement

2 Spurs

a Spurs from the main Cornice trunking across ceilings or down walls are made using a Mini Trunking Adaptor (CA1 for Compact or CA2 for Standard) in conjunction with the appropriately sized Mini Trunking spout adaptor.

b In Standard Cornice, the cable retaining strap enables cables to be segregated from other services used in conjunction with a mini trunking adaptor. A hole of 25mm or less must be drilled and the cable should be looped through the aperture as shown. A cable retraining strap is also available for Compact Cornice.

Locate ceiling and wall spur then mark base to indicate the end of the lid run. Fit Ega Mini Trunking as appropriate using the relevant Mini Trunking spout adaptor (YEA). Install wiring using retaining strap(s) as necessary.

3 Corners and Accessories

a Mitre base to ensure moulded accessories fit. Cut lid square having made suitable allowance for the width of the accessories and the overlap required to fit under joint covers.

b All fittings clip onto an exposed section of the trunking base. Allow suitable gaps in trunking lid.

Mark the base with position and width of the accessories and cut the lid the appropriate length, taking due notice of the gap allowances. (Standard Cornice shown).

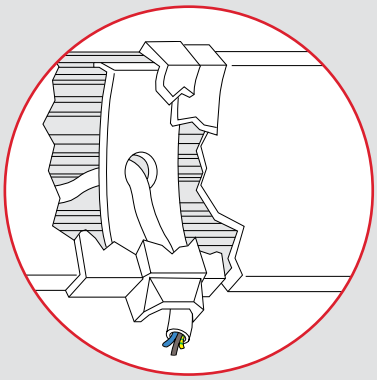

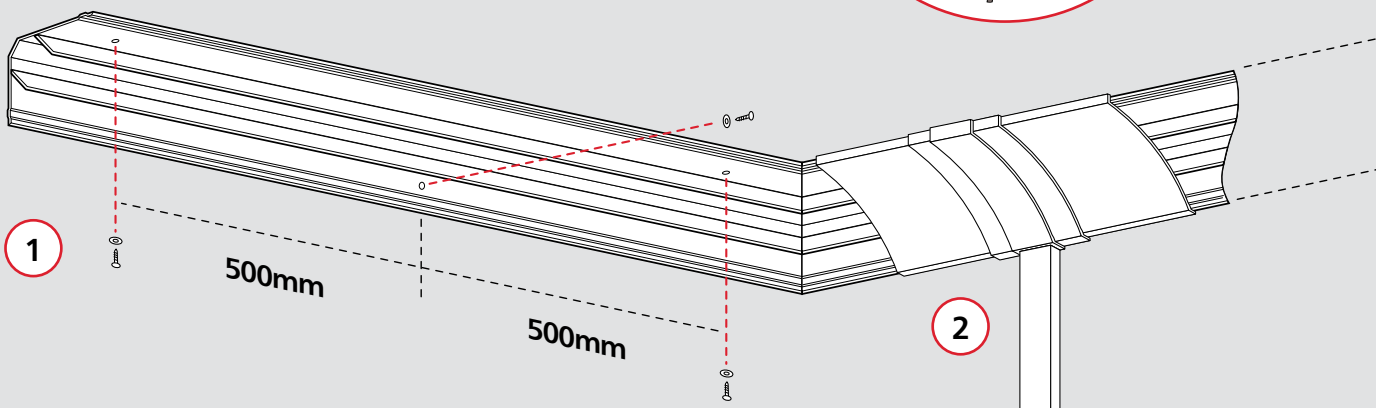

Standard Cornice

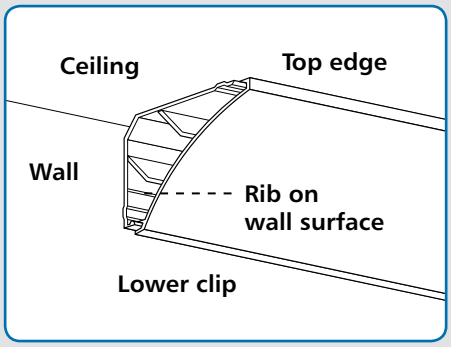

Compact Cornice

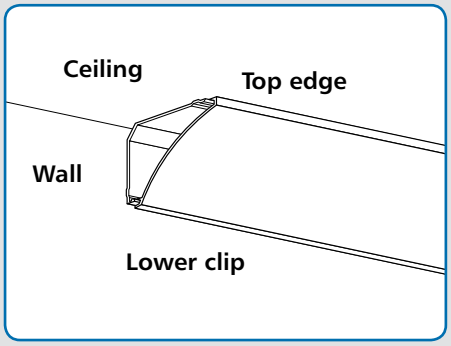

Ega Cornice Technical

4 Covers

Installation – Locate the top edge, adjacent to the ceiling, with upper back clip.

The lower clip is then fitted by exerting pressure against the front face, pushing towards the wall (Standard Cornice Shown).

Removal – Gain access to the interior of the trunking. Remove one of the accessory mouldings and carefully insert screwdriver, under the top edge and lever forward so as to disengage clip.

In restricted spaces, engage a hook behind the ceiling edge of the cover, and pull forward to disengage.

The lower clip is then disengaged in the same way.

Notes

Jointing – Where gaps occur, a gap of 5mm must be left between base sections to allow for expansion. The cover must overlap this joint by a minimum of 50mm.

Finishing – In circumstances where the wall or ceiling is uneven, a flexible sealer or mastic can be used to fill any gaps which occur along the edge of the trunking. Relief finishes, such as Artex, must be smoothed down with a spatula, for a width of 25mm minimum, along the line of the trunking in order to enable cover removal.

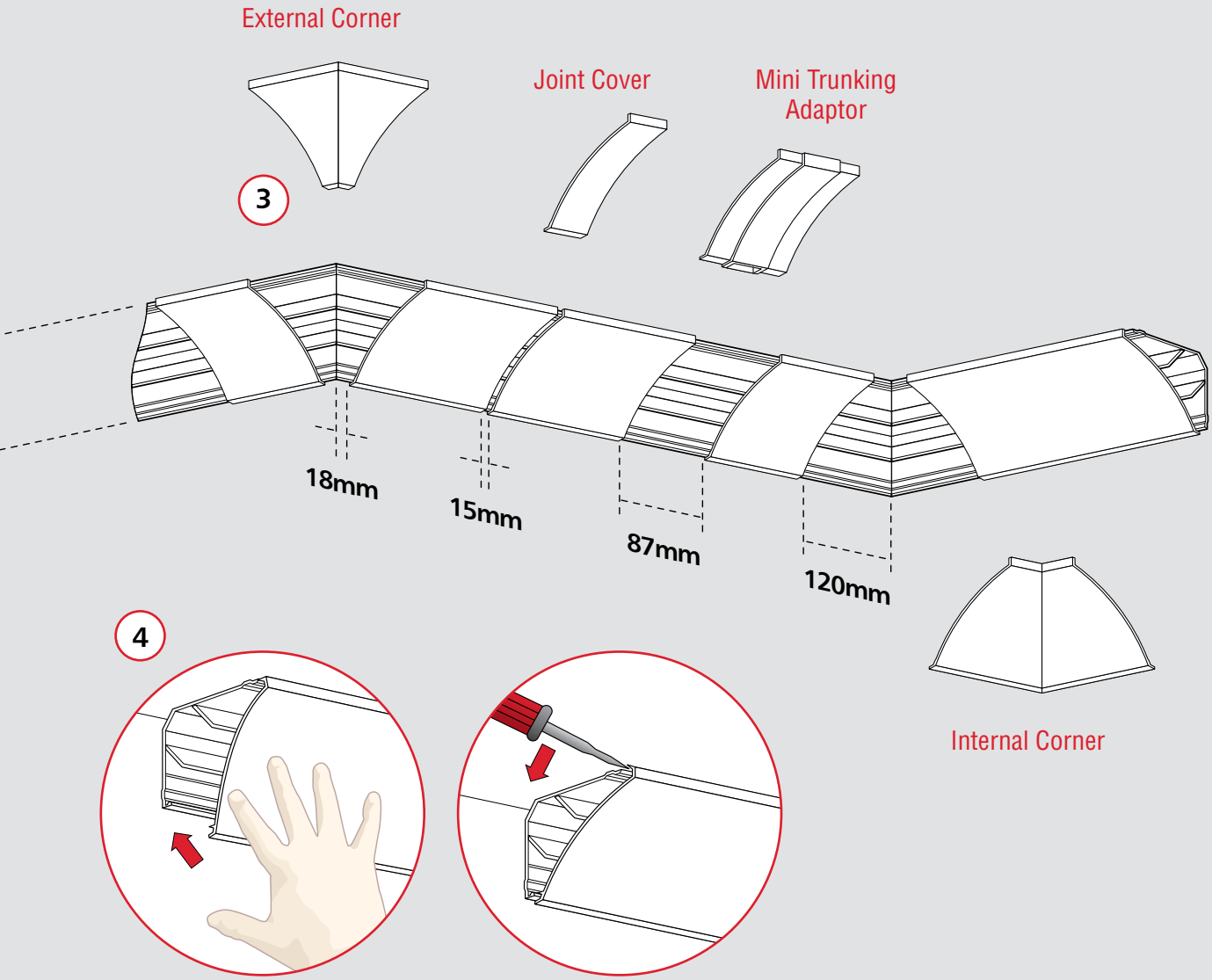

Egatube Conduit Technical

Conduit and fittings

TECHNICAL SPECIFICATION

MATERIALS
PVCu materials used in the manufacture of MK products are self extinguishing non-flame propagating in accordance with BS 4678 Part 4.

Extrusion material has been tested by a UKAS accredited laboratory in accordance with the requirements of BS 476 Part 7 and has achieved a Class 1Y.

Moulding material has been tested by a UKAS accredited laboratory and conforms with IEC 695-2-1 at a severity of 650°C

IET WIRING REGULATIONS
Designed and manufactured to comply in all respects with BS 7671:2008 (IET Wiring Regulations 17th Edition: 2008)

QUALITY ASSURANCE
The system is manufactured to BS EN ISO 9001

Classifications to BS EN 61389-1:2008 and BS EN 61386-21:2004 available on request

521.11.201 WIRING SYSTEMS IN ESCAPE ROUTES
Conduit systems – MK recommends the usage of standard metallic saddles and bars when using conduit in escape routes

Trunking systems – MK recommends the use of existing metallic cable retention systems when using trunking in escape routes

FEATURES

- Wide range of sections and sizes
- Oval, round and corrugated sections are compatible
- Simple and fast installation
- Very wide range of components maximises versatility of application
- Very durable and impact resistant
- 2 grades of round conduit to suit various site conditions
- All extrusions manufactured from 100% recycled material*

Description

Egatube high impact PVCu conduit offers a cost effective solution for both new and refurbishment contracts.

The conduit is available in oval sections (6 sizes), in 2 grades of round section (6 sizes of each) and as a flexible corrugated version (3 sizes).

The wide range of fittings and ancillary products means that almost any installation can be specified for with confidence.

Egatube conduits are light in weight, the smaller sizes can be bent cold and they can easily be cut using a hacksaw or Egasnips. This means that installation can be 50% quicker than using steel. Repairs and alterations are also simpler and quicker to make.

* Based on 2014 consumption

For a full range of corresponding products, see pages 350-354 in the product selector.

Egatube Conduit Technical

Conduit and fittings

Dimensions (mm)

OVAL SECTION CONDUIT (REF EOC)

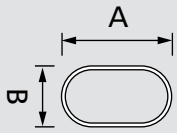

Oval conduit is mainly used for switch drops and general domestic installations in both buried and surface installations. Manufactured in accordance with requirements of BS 4607 Part 5 and BS EN 50085 Part 1 and Part 2-1.

LIST. NO.	SIZE mm		WALL THICKNESS mm	WEIGHT KG/M	CROSS SECTION AREA mm²
	A	B			
EOC1	13	8	0.9	0.036	60
EOC2	16	10	0.9	0.049	103
EOC3	22.5	11	0.9	0.084	172
EOC4	29	11	1.0	0.097	225
EOC5	29	16	1.0	0.125	336
EOC6	23	14	0.8	0.081	238

Standard length 3 metres.

FLEXIBLE CONDUIT (REF EF)

Suitable for connection of vibrating equipment or to provide tight bends for interconnecting conduits. Can be surface mounted or cast in concrete and can be used with standard conduit fittings. Manufactured in accordance with BS EN 61386-1.

LIST. NO.	DIAMETER mm	WEIGHT KG/M	CROSS SECTION AREA mm²
EF1	16	0.05	107
EF2	20	0.064	189
EF3	25	0.094	308

Standard lengths 50 metre coils.

RECTANGULAR CHANNELLING (REF REC)

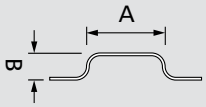

Used for switch drops and general domestic installations mainly in carcass situations.

LIST. NO.	SIZE mm		WALL THICKNESS mm	WEIGHT KG/M
	A	B		
REC1	12.5	8	0.9	0.047
REC2	25	8	0.9	0.051
REC3	38	9.5	0.9	0.069

Standard length 2 metres.

ROUND SECTION HEAVY GAUGE HIGH IMPACT CONDUIT (REF. HIP)

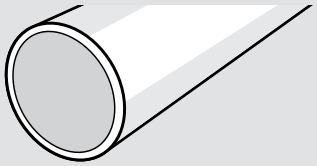

This is acknowledged to be the finest PVCu conduit available and is designed to withstand the most arduous site conditions and extremes of weather.

Temperature range –5°C to +60°C.

Complies with BS EN 61386 Part 1 Heavy Impact.

LIST. NO.	OUTSIDE DIAMETER mm	WALL THICKNESS mm	WEIGHT KG/M	CROSS SECTION AREA mm²
HIP1	16	1.7	0.102	121
HIP2	20	1.8	0.150	209
HIP3	25	1.9	0.205	350
HIP4	32	2.5	0.322	573
HIP5	38	2.5	0.394	859
HIP6	50	3.1	0.684	1506

Standard length 3 metres.

ROUND SECTION LIGHT GAUGE HIGH IMPACT CONDUIT (REF. HLG)

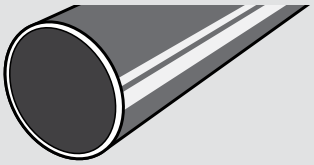

Suitable for applications where heavy compressive strength is not required. The high impact characteristic combined with the lighter gauge provides excellent physical properties for flush and surface applications.

Temperature range –5°C to +60°C.

Complies with BS EN 61386 Part 1 Medium Impact.

LIST. NO.	OUTSIDE DIAMETER mm	WALL THICKNESS mm	WEIGHT KG/M	CROSS SECTION AREA mm²
HLG1	16	1.1	0.076	143
HLG2	20	1.3	0.102	237
HLG3	25	1.5	0.170	376
HLG4	32	1.5	0.214	654
HLG5	38	1.5	0.259	954
HLG6	50	1.9	0.417	1676

Standard length 3 metres.

Egatube Conduit Technical

Conduit and fittings

Cable Capacities of Conduit

17th Edition of the IET Wiring Regulations Selection and Erection of Wiring Systems

The 17th Edition of the Wiring Regulations, Chapter 52 'Selection and Erection of Wiring Systems', describes methods to provide a means of compliance with Regulation 522-8.

The number of cables drawn into or laid in an enclosure of a wiring system shall be such that no damage is caused to the cables or to the enclosure during their installation.

The method employs a unit system, each cable size being allocated a factor. The sum of all factors for the cables intended to be run in the same enclosure is compared against the factors given for conduit in order to determine the size of the conduit necessary to accommodate those cables.

Types of run

It has been found necessary, for conduit, to distinguish between:-

1. Straight runs not exceeding 3 metres in length, and
2. Straight runs exceeding 3 metres, or runs of any length incorporating bends or sets

The term "bend" signifies a British Standard 90° bend, and one double set is equivalent to one bend.

For case 1, each conduit size is represented by only one factor. For case 2, each conduit size has a variable factor which is dependent on the length of run and the number of bends or sets. For a particular size of cable the factor allocated to it for case 1 is not the same as for case 2.

Variable factors

A number of variable factors affect any attempt to arrive at a standard method of assessing the capacity of conduit.

Some of these are:

- reasonable care (of drawing-in)
- acceptable use of the space available
- tolerance in cable sizes
- tolerance in conduit

The following tables can only give guidance as to the maximum number of cables which should be drawn in. The sizes should ensure an easy pull with low risk of damage to the cables.

Only the ease of drawing-in is taken into account. The electrical effects of grouping is not. As the number of circuits increases the current carrying capacity of the cable decreases. Cable sizes have to be increased with consequent increase in cost of cable and conduit.

Single-core PVC insulated cables in straight runs of conduit not exceeding 3 metres in length.

- For each cable it is intended to use, obtain the term from Table A1.
- Add the cable terms together and compare the total with the conduit terms given in Table A2.
- The conduit size which will satisfactorily accommodate the cables is that size having a factor equal to or exceeding the sum of the cable factors

Single-core PVC insulated cables in straight runs of conduit exceeding 3 metres in length or in runs of any length incorporating bends or sets.

- For each cable it is intended to use, obtain the appropriate terms from Table A3.
- Add all the cable terms so obtained and compare with the conduit terms given in Table A4, taking into account the length of run it is intended to use and the number of bends and sets in that run.
- The conduit size which will satisfactorily accommodate the cables is that size having a terms equal to or exceeding the sum of the cable terms.

Egatube Conduit Technical

Conduit and fittings

TABLE A1

CABLE TERMS FOR SHORT STRAIGHT RUNS

TYPE OF CONDUCTOR	CONDUCTOR CROSS-SECTIONAL AREA (mm²)	TERM
Solid	1	22
	1.5	27
	2.5	39
Stranded	1.5	31
	2.5	43
	4	58
	6	88
	10	146
	16	202
	25	385

TABLE A2

CONDUIT TERMS FOR SHORT STRAIGHT RUNS

CONDUIT DIA (mm)	TERM
16	290
20	460
25	800
32	1400
38	1900
50	3500

CAPACITY EXAMPLE

NUMBER OF CABLES FOR A 3.0 METRE RUN WITH THREE BENDS

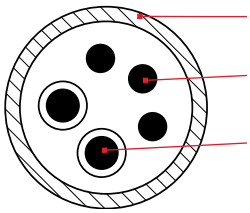

CONDUIT 20mm dia.
(Term 182) Table A4

CABLE SOLID 2.5mm² (3 qty)
(Term 30) Table A3

CABLE STRANDED 4.0mm² (2 qty)
(Term 43) Table A3

Term total – (30+30+30)+(43+43) = **176**

The conduit size is satisfactory (Term 182) to accommodate the cables shown (Term 176).

TABLE A3

CABLE TERMS FOR LONG STRAIGHT RUNS, OR RUNS INCORPORATE BENDS

TYPE OF CONDUCTOR	CONDUCTOR CROSS-SECTIONAL AREA (mm²)	TERM
Solid or Stranded Conductor	1	16
Solid or Stranded Conductor	1.5	22
Solid or Stranded Conductor	2.5	30
Solid or Stranded Conductor	4	43
Solid or Stranded Conductor	6	58
Solid or Stranded Conductor	10	105
Solid or Stranded Conductor	16	145
Solid or Stranded Conductor	25	217

TABLE A4

CONDUIT TERMS FOR LONG STRAIGHT RUNS, OR RUNS INCORPORATING BENDS

LENGTH OF RUN (M)	CONDUIT DIA mm																			
	16	20	25	32	16	20	25	32	16	20	25	32	16	20	25	32	16	20	25	32
	STRAIGHT				ONE BEND				TWO BENDS				THREE BENDS				FOUR BENDS			
1	COVERED BY TABLES A1 AND A2				188	303	543	947	177	286	514	900	158	256	463	818	130	213	388	692
1.5					182	294	528	923	167	270	487	857	143	233	422	750	111	182	333	600
2					177	286	514	900	158	256	463	818	130	213	388	692	97	159	292	529
2.5					171	278	500	878	150	244	442	783	120	196	358	643	86	141	260	474
3					167	270	487	857	143	233	422	750	111	182	333	600				
3.5	179	290	521	911	162	263	475	837	136	222	404	720	103	169	311	563				
4	177	286	514	900	158	256	463	818	130	213	388	692	97	159	292	529				
4.5	174	282	507	889	154	250	452	800	125	204	373	667	91	149	275	500				
5	171	278	500	878	150	244	442	783	120	196	358	643	86	141	260	474				
6	167	270	487	857	143	233	422	750	111	182	333	600								
7	162	263	475	837	136	222	404	720	103	169	311	563								
8	158	256	463	818	130	213	388	692	97	159	292	529								
9	154	250	452	800	125	204	373	667	91	149	275	500								
10	150	244	442	783	120	196	358	643	86	141	260	474								

Egatube Conduit Technical

Conduit and fittings

Boxes

This table breaks down box specifications showing gang, entry points, cut outs and corner types.

LIST NO.	MOUNTING	GANG	ENTRY TYPE RECTANGULAR	ROUND	OVAL	CUT–OUTS IN BACK	CORNER
ESU61	flush	1	–	–	DI	1	–
ESU81	flush	1	–	ABCEFGHJ	–	–	–
ESU8ML	flush	1	–	ABCEFGHJ	–	1	–
ESU82ML	flush	2	–	ABCDEFGHJ	I	2	–
ESU92ML	flush	2	–	BCDEGHJ	I	2	–
ESU9ML	flush	1	–	BCEGHJ	–	1	–
ESU241	surface	1	I	D	–	2	round
ESU242	surface	2	AFI	D	–	2	round
ESU261	surface	1	–	D	–	1	square
ESU262	surface	2	–	D	–	–	square
ESU281	surface	1	–	I	–	1	square
ESU282	surface	2	I	D	–	1	square

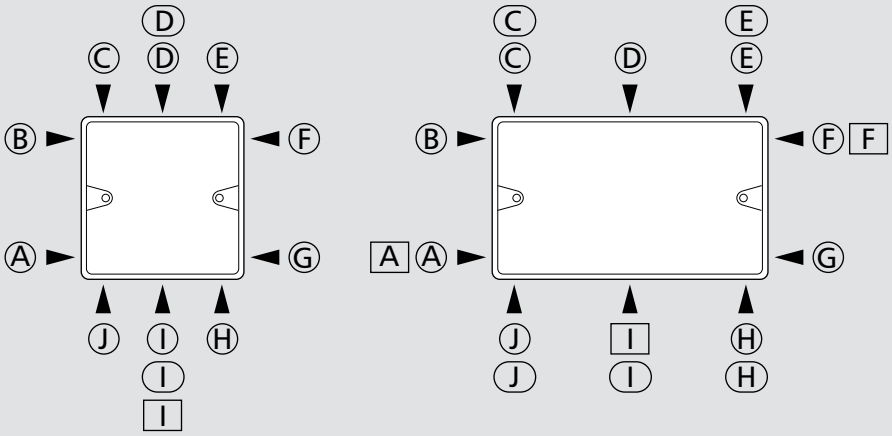

Egatube Conduit Technical

Conduit and fittings

Fixing

Egatube round conduit is fixed in the normal way with saddles or clips. (Various types of saddles are available). The distance between saddles should not exceed that stated in the following table, or less in hot temperatures.

NOMINAL CONDUIT SIZE (mm)	MAXIMUM DISTANCE BETWEEN SUPPORTS (M)	
	HORIZONTAL	VERTICAL
Not exceeding 16	0.75	1.00
Exceeding 16 but not exceeding 25	1.5	1.75
Exceeding 25 but not exceeding 40	1.75	2.00
Exceeding 40	2.00	2.00

It is recommended that all boxes be fixed first wherever practicable, using the two fixing holes provided in circular boxes. Lines may then be struck for the saddle run and the saddles should be fixed 225mm on either side of bend or boxes. The tubing may then be 'sprung' into the box spouts. It will be noted that the saddles are designed to be a sliding fit on the conduit and it is important to see that all fixings should be sliding fits (see Expansion).

Expansion

A rise in temperature of 25°C would cause an increase of 5mm in a 3 metre length of conduit. This may be ignored in flush work where the tube is bonded to the concrete or plaster.

In surface work, however, precautions must be taken or expansion will cause the tube to bow, although where bends and sets are close together these take up any expansion. Where long straight runs occur in conditions of varying temperatures, care must be taken to overcome problems by using expansion couplers. These are couplers of double normal length with a shoulder formed 19mm from one end. Conduit is secured into this end of about 75mm long which is a sliding fit over the other conduit. The other conduit is inserted about 50mm into the coupler leaving it free to move 25mm in either direction, which is ample for even the greatest extremes of temperature. For straight runs it is advisable to use an expansion coupling every 6 metres.

Adhesives

Egaweld Plus

Waterproof for making watertight joints between PVC conduit, trunking and fittings.

A statement regarding COSHH regulations is available on the MK website – **www.mkelectric.co.uk**

Light fittings

When considering the use of totally enclosed lighting fittings, remember that the IET Wiring Regulations restrict the use of PVCu boxes to loads of 3 kg and a temperature of 60°C. When conditions in excess of these figures are anticipated, the use of either the heat resistant boxes or conduit boxes suffixed 'EL' are recommended.

The "EL" conduit boxes will support a load of up to 10 kgs at 60°C.

Fittings

A wide range of fittings are available, see Product Selector for details.

Bending

To bend circular conduit, insert the appropriate spring. The spring has an "eye" formed on one end, to which a cord should be attached in order to withdraw the spring. The bend is then made by hand. Twice the angle required should be bent and the tube then allowed to ease back to the desired position. Do not attempt to force the bend back with the spring inserted, as this action will damage the spring. When withdrawing the spring it is suggested that it be twisted in an anti-clockwise direction thus reducing the diameter of the spring and providing easy withdrawal. It is important to use the correct size spring. In cold weather it may be necessary to warm the tube slightly at the point where the bend is to be made. Always saddle the tubing as quickly as possible after bending.

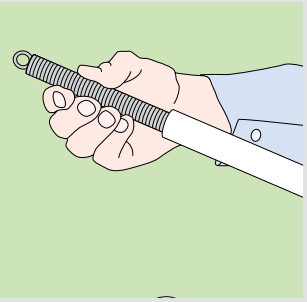

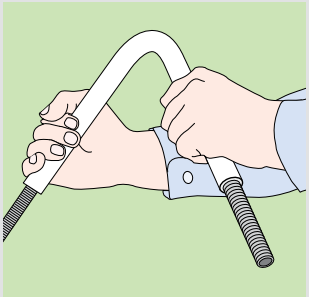

Ega Mini Trunking Technical

Ega Mini, Communication and Red Alert Trunking

Standards and Approvals

EGA mini-trunking systems are manufactured in accordance with the requirements of BS EN 50085-1 and BS 4678 Part 4 and achieve medium impact classification.

Red Alert mini-trunking complies with the following:

BS 5839 Fire detection and alarm systems in buildings (if used with fire product, ie. cables, cables must still be secured with metal securing clips **inside** trunking or trunking held with metal clip **around** trunking to comply with BS 5839 Part 1).

BS 4662 Boxes for the enclosure of electrical accessories BS EN 50085-1 and BS 4678 Part 4 Cable trunking made of insulating material.

All systems comply with all relevant requirements of the latest Edition of the IET Wiring Regulations.

Ega Mini Trunking systems are Class 1Y for spread of flame when tested in accordance with BS 476 Part 7.

521.200 Wiring systems in escape routes.

Trunking systems – MK recommends the use of existing metallic cable retention systems when using trunking in escape routes.

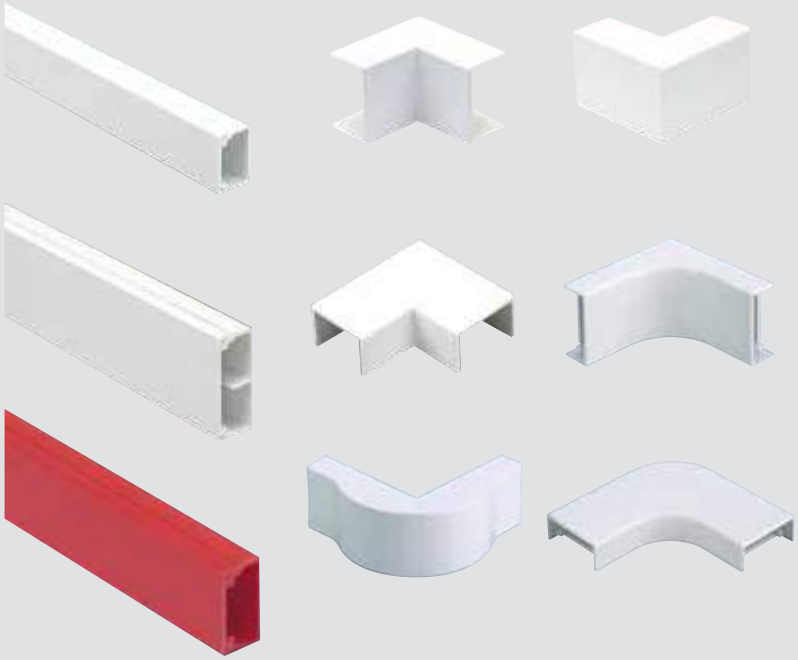

FEATURES

- Wide range of trunking profiles
- Red Alert profile for alarm circuits
- Wide range of integrated components maximises versatility of application
- Unobtrusive and neat
- Easy to assemble and install
- Durable and impact resistant to Medium Classification BS EN 50085-1 and BS 4678 Part 4
- Communication trunking for voice and data
- Speedfix options allow fast installation
- All extrusions manufactured from 100% recycled material*

TECHNICAL SPECIFICATION

MATERIALS
PVCu materials used in the manufacture of MK products are self extinguishing non-flame propagating in accordance with BS 4678 Part 4.

Extrusion material has been tested by a UKAS accredited laboratory in accordance with the requirements of BS 476 Part 7 and has achieved a Class 1Y.

Moulding material has been tested by a UKAS accredited laboratory and conforms with IEC 695-2-1 at a severity of 650°C.

IET WIRING REGULATIONS
Designed and manufactured to comply in all respects with BS 7671:2008 (IET Wiring Regulations 17th Edition: 2008)

QUALITY ASSURANCE
The system is manufactured to BS EN ISO 9001

Classifications to BS EN 50085-1:2005 and BS EN 50085-2-1:2006 available on request

* Based on 2014 consumption

For a full range of corresponding products, see pages 361-370 in the product selector.

Ega Mini Trunking Technical

Ega Mini, Communication and Red Alert Trunking

Description

A range of trunking systems designed for cable distribution in new or refurbishment projects in the domestic and commercial sectors.

Red Alert

Available in red, simplifies alarm circuit identification and is specifically designed for use with light duty mineral insulated cables.

Communication trunkings

Designed to take smaller diameter telecommunications and data cabling. There are three sizes available and the systems are complete with a range of fittings.

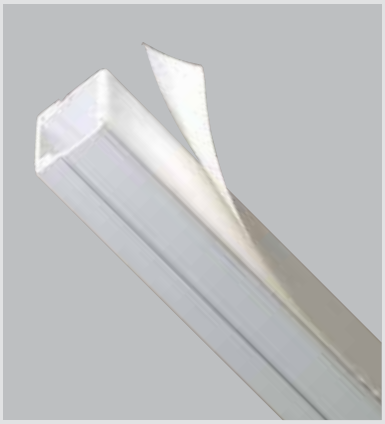

Speedfix trunkings

These are self-adhesive profiles used to distribute data and voice cabling.

All systems are compatible and have simple clip on lids which positively locate when hand pressure is applied.

Circular boxes

These are designed to accept standard ceiling roses, pull switches and plug-in lighting fittings. The base incorporates an earth terminal facility (order terminal separately). Red Alert bases are supplied with earth terminal. 50.8 mm fixing centres and M4 Pillar inserts. Load suspension 3 kg @ 60°C max.

Components

The four components shown below are fabricated sections and space must be allowed for inclusion in runs of trunking. All other components snap on over standard trunking profiles.

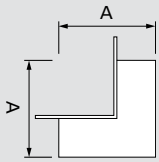

EXTERNAL CORNER (90°) YAE	
LIST NO	A
YAE7	80mm

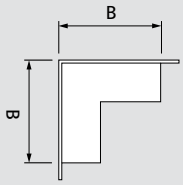

INTERNAL CORNER (90°) YAI	
LIST NO	B
YAI7	50mm

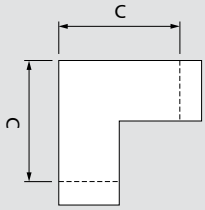

FLAT ANGLE (90°) YAF	
LIST NO	C
YAF7	100mm

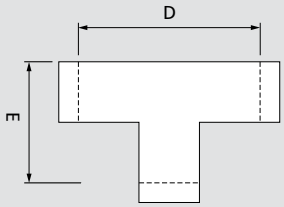

FLAT TEE (90°) YTF		
LIST NO	D	E
YTF7	150mm	100mm

Ega Mini Trunking Technical

Ega Mini, Communication and Red Alert Trunking

Dimensions (mm)

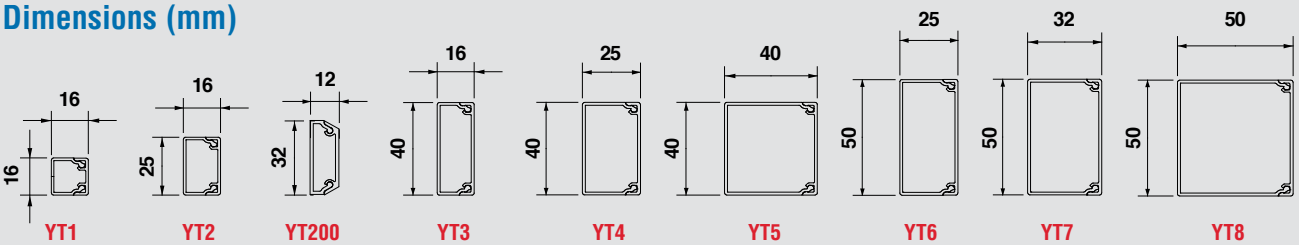

EGA MINI AND RED ALERT CABLE CAPACITY																						
TYPE OF CONDUCTOR	SIZE FACTOR	CABLE	YT1 / SPF1		YT2 / SPF2 YT2RED		YT200 / SPF200		YT3 / SPF3		ZT3 (each cmpt)		YT4 / SPF4		ZT4 (each cmpt)		YT5		YT6		YT7		YT8	
			FULL TERM CSA 100% FILL (mm²)																					
			154		276		234		458		224		795		387		1312		948		1273		2037	
			TERM AT 45% FILL (mm²)																					
			69		124		105		206		100		357		174		590		426		572		916	
POWER CABLES			NUMBER OF CABLES AT 45% FILL																					
PVC	1.5mm²	8.6	8		14		12		23		11		41		20		68		49		66		106	
Stranded	2.5mm²	12.6	5		9		8		16		7		28		13		46		33		45		72	
	4mm²	16.6	4		7		6		12		6		21		10		35		25		34		55	
	6mm²	21.2	3		5		4		9		4		16		8		27		20		26		43	
DATA CABLES			NUMBER OF CABLES AT 45% FILL (A) AND FULL CAPACITY (B)																					
			A	B	A	B	A	B	A	B	A	B	A	B	A	B	A	B	A	B	A	B	A	B
Cat5E UTP	5.5mm dia.	30.2	2	5	4	9	3	7	6	15	3	7	11	26	5	12	19	43	14	31	18	42	30	67
Cat5E STP	6.0mm dia.	36.0	1	4	3	7	2	6	5	12	2	6	9	22	4	10	16	36	11	26	15	35	25	56
Cat6 UTP	6.5mm dia.	42.2	1	3	2	6	2	5	4	10	2	5	8	18	4	9	13	31	10	22	13	30	21	48
Cat6 STP	7.0mm dia.	49.0	1	3	2	5	2	4	4	9	2	4	7	16	3	7	12	26	8	19	11	25	18	41

EGA COMMUNICATION CABLE CAPACITY								
TYPE OF CONDUCTOR	SIZE FACTOR	CABLE	CMT1 / SMT1		CMT3 / SMT3		CMT4 / SMT4	
			FULL TERM CSA 100% FILL (mm²)					
			44		102		156	
			TERM AT 45% FILL (mm²)					
			19		45		70	
POWER CABLES			NUMBER OF CABLES AT 45% FILL					
PVC	1.5mm²	8.6	8.6		5		8	
Stranded	2.5mm²	12.6	1		3		5	
	4mm²	16.6	1		2		4	
	6mm²	21.2	0		2		3	
DATA CABLES			NUMBER OF CABLES AT 45% FILL (A) AND FULL CAPACITY (B)					
			A	B	A	B	A	B
Cat5E UTP	5.5mm dia.	30.2	0	1	1	3	2	5
Cat5E STP	6.0mm dia.	36.0	0	1	1	2	1	4
Cat6 UTP	6.5mm dia.	42.2	0	1	1	2	1	3
Cat6 STP	7.0mm dia.	49.0	0	0	0	2	1	3

Dimensions (mm)

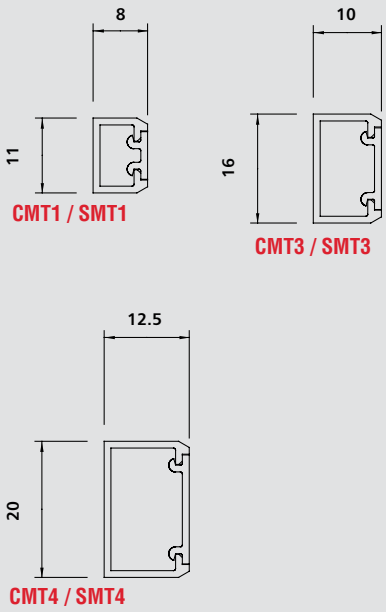

Interact Underfloor Technical

Interact Underfloor Power

Typical Floor Layout

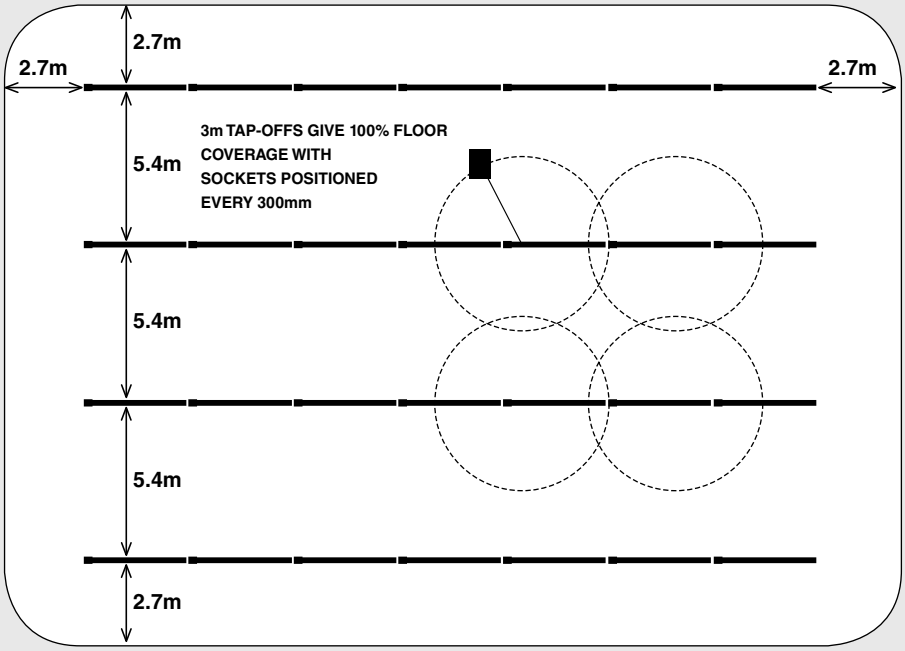

Dimensions

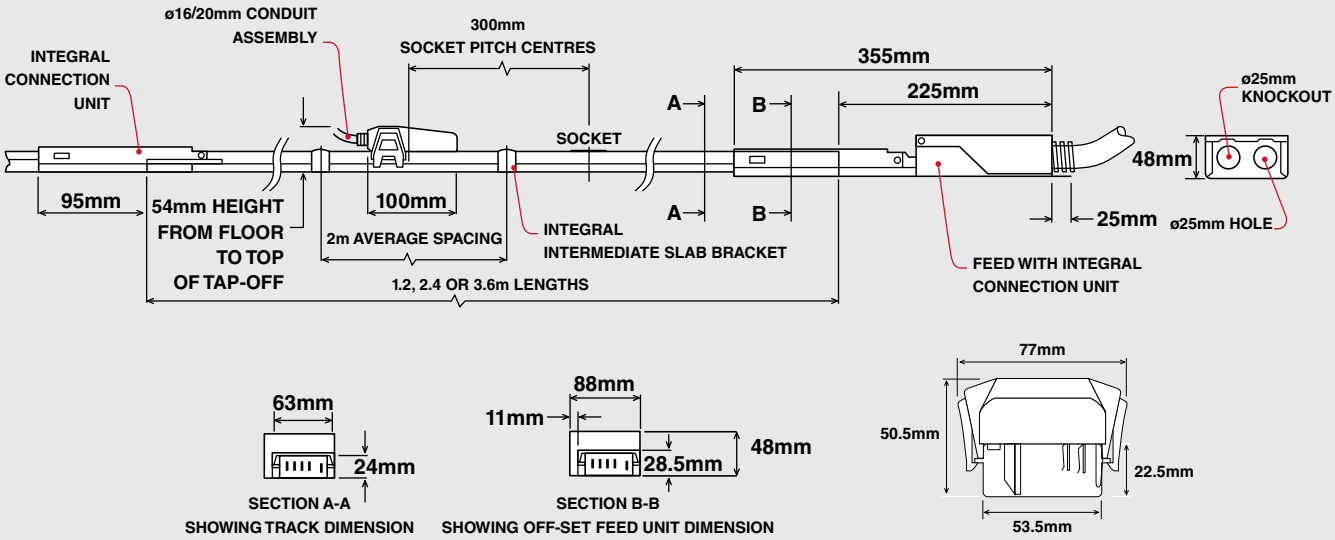

Elevating fixing brackets should be positioned within 300mm from either end of a track run and either side of all joints.

Minimum support requirement:

3.6 metre length = 4 brackets equally spaced

2.4 metre length = 3 brackets equally spaced

1.2 metre length = 2 brackets equally spaced

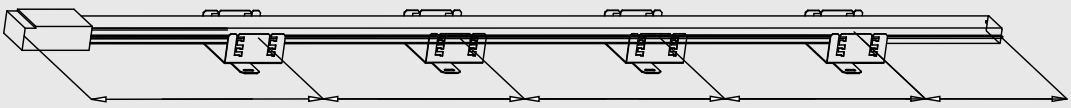

300mm max = = = 300mm max

For a full range of corresponding products, see pages 371-376 in the product selector.

Interact Underfloor Technical

Interact Underfloor Power

Standards and Approvals

Underfloor 63A – complies with BS EN 61534:2011

Manufactured within ISO 9000-9002 environment.

TECHNICAL SPECIFICATION		
ELECTRICAL SPECIFICATION	**63A**	
Rated Current	63	A
Rated Voltage	480	V
Frequency	50/60	Hz
Conditional Short Circuit Rating	16	kA
Resistance per Copper Conductor (At ambient temperature 20°C)	1.3	mΩ/m
Impedance per Copper Conductor (At ambient temperature 20°C)	1.3	mΩ/m
VOLT DROPS (FULL LOAD, CONCENTRATED AT ONE END) (LINE + NEUTRAL)		
Powertrack	2.9	mV/A/m
Feed Unit	0.6	mV/A
Tap-off Connection	1.6	mV/A
+ 4mm² Cable	10	mV/A/m
+ 2.5mm² Cable	18	mV/A/m
Joint	0.6	mV/A
Flexible interlink Unit	0.8	mV/A
+ 10mm² Cable	4.0	mV/A/m
EARTH FAULT LOOP IMPEDANCE		
Line Conductor	1.5	mΩ/m
EARTH		
– Case	1.0	mΩ/m
– Copper	1.5	mΩ/m
– Copper + Case	0.75	mΩ/m
Feed Unit (Line + Earth)	0.6	mΩ
Tap-off Connection (Line + Earth)	3.1	mΩ
+ 4mm² Cable R1 + R2	10	mΩ/m
+ 2.5mm² Cable R1 + R2	18	mΩ/m
Joint (Line + Earth)	0.6	mΩ
Flexible Interlink Unit (Line + Earth)	0.8	mΩ
+ 10mm² Cable R1 + R2	3.7	mΩ/m

3m tap off is actually 2.7/2.8m fully stretched, shortened by 0.1 - 0.2m of slack to ensure it remains flexible when wired to a module.

MECHANICAL DATA	63A	
Max. No. of Copper Conductors	5	
Conductor Cross Section Area (Nominal)	14.4	mm²
Powertrack Casing Copper Equivalent (Where Casing is Protective Earth)	14.5	mm²
Cable Termination Capacity	16	mm²
Tap-off Cable 32A	4.0	mm²
Tap-off Cable 13A	2.5	mm²
Tap-off Conduit Sizes	16/20	Ømm
Flexible Interlink Cable	10	mm²
Flexible Interlink Conduit	25	Ømm
Integral Feed Conduit Entry	1 x 25	Ømm
Feed Conduit Entry	2 x 25	Ømm
IP Rating	4X	
MATERIALS SPECIFICATION		
Powertrack Casing, Feeds and Brackets	Galvanised Steel	
Conductors	High Conductivity Copper	
Dust cover		
Powertrack Insulators	63A – Polyamide and polyester	
	Polycarbonate Sockets / Tap-off	
	Plug / Joint	
Mouldings	Polycarbonate	
Shutter	Acetal	
Tap-off/Interlink Flexible Conduit	Galvanised Steel	
Tap-off Cable (Singles in Conduit)	LSF cable to BS 7211 (PVC Cable to BS 6004 available on request)	
Tap-off Cable (Multi-core)	Multi-core cable to BS 6500 & BS 7211 LSF cable standard (PVC cable available on request)	
TAP-OFF PINS		
– Line, Neutral & Copper Earth	Copper and Phosphorous Bronze, tin plated	
– Casing Earth	Brass, tin plated	
Flexible Interlink Cable	10mm² cable to BS 6231	

Cablelink Plus Modular Technical

Cablelink Plus Modular Floorbox

Standards and Approvals

The Cablelink Plus Modular floorbox supports compliance with the latest edition of the IET Wiring Regulations (BS 7671) and to BS EN 50085 Part 1 and BS EN 50085 Part 2-2.

TECHNICAL SPECIFICATION

MATERIALS

PLASTIC COMPONENTS
Manufactured from UL94 V2 rated nylon.

METAL COMPONENTS
Manufactured from pre-galvanised steel.
Accessory plates are powdercoated or colour coated.

RAL COLOURS
Grey (GRY) = RAL 7011

Feature benefits

- Tested to EN 50085-2-2 to accept 5000N load
- Quick release blades ensure a fast and simple installation
- Designed to support Cat 6 & Cat 7 structured cabling systems
- Self closing lid in accordance with IEC 61534-22
- Wide range of power and data accessories available to meet all requirements
- Quality, reliability and safety come as standard
- Provision of RCD protection supports compliance with the 17th Edition Wiring Regulations
- 5 year guarantee

Installation

Cablelink Plus Modular boxes should not be installed in the following situations:

- Where protruding electrical cables are likely to cause a safety hazard
- In passageways, especially where trolleys or other vehicles may be used
- On escape routes, as this may impede the evacuation of the occupants from the building
- Where the cleaning methods employed result in the formation of pools of liquid or soaking of the floor surface
- Desks, chairs, shelving, filing cabinets should not be positioned on the floorbox as this will interfere with opening the lid

Load Testing

Load Testing of floorboxes to BS EN 50085 Part 2-2 (Clauses 10.5.103 and 10.5.104).

The floorboxes have been tested to and comply with the loading requirements of BS EN 50085 Part 2-2 (Cable trunking systems and cable ducting systems for electrical installations Part 2-2: Particular requirements for cable trunking systems and cable ducting systems intended for mounting underfloor, flushfloor, or onfloor).

There are two loading criteria for the floorboxes - one with a point loading to replicate foot traffic for example, and the other, with a large plate to replicate hand trucks / trollies and heavier larger loads. For both loading criteria the maximum allowable deflection under load is 6mm and the maximum permanent deflection after the load has been removed is 3mm. The loading position is the centre of the lid.

The Lid Deflection (loading) graph shows that the maximum point loading classification achieved is 3kN and the maximum large plate loading classification achieved is 5kN.

The Permanent Deflection graph shows the permanent deflection from the test wheel loading at 3kN is 0.55mm and large plate loading at 5kN is 0.4mm. This is well within the maximum allowable deflection of 3.0mm.

Lid Deflection – Cablelink Plus 265 x 265mm Frame Assembly

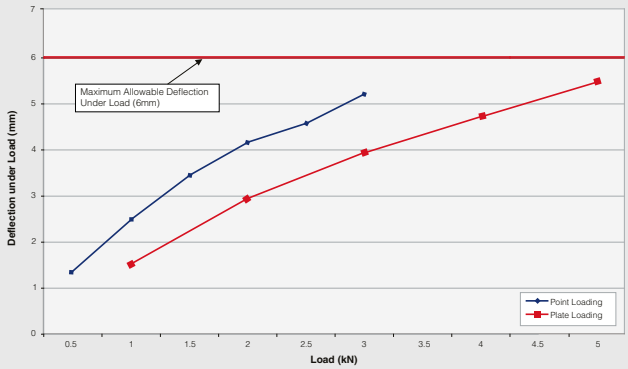

Permanent Deflection After Removal of Load – Cablelink Plus 265 x 265mm Frame

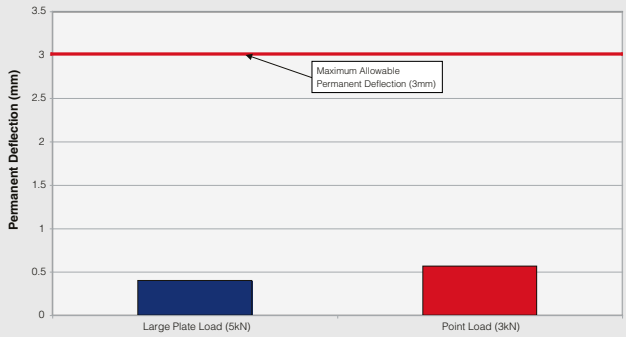

For a full range of corresponding products, see pages 377-381 in the product selector.

Cablelink Plus Modular Technical

Cablelink Plus Modular Floorbox

Floorbox: Tile and Frame and Floor Tile Cut-Out Dimensions for 3 and 4 Modules Box

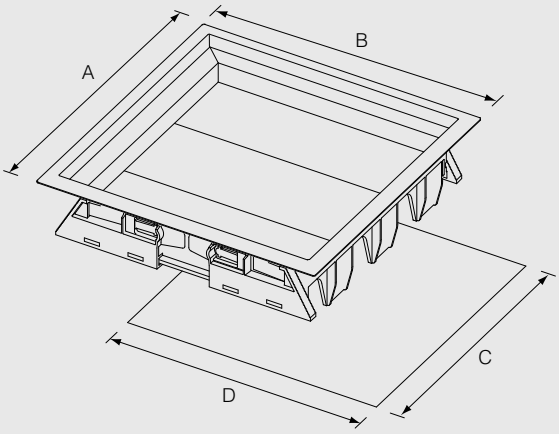

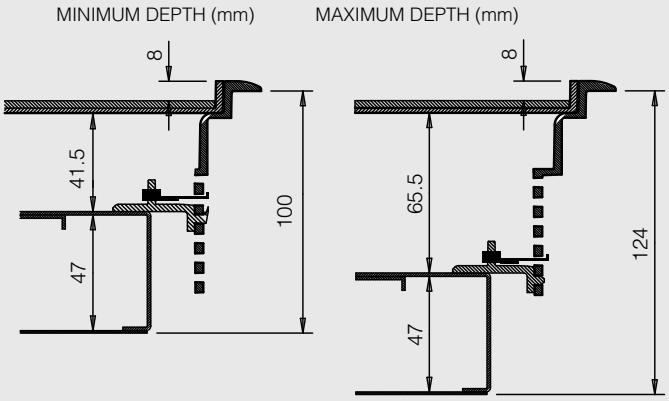

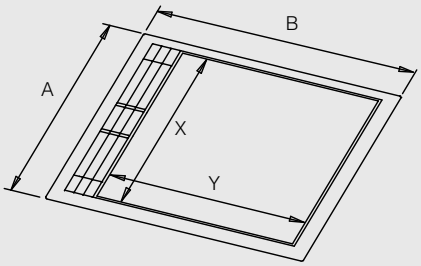

Cablelink Plus Module Dimensions

CRM11750

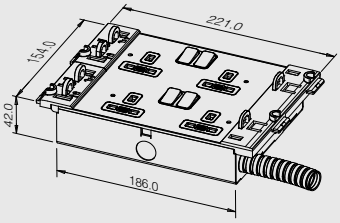

CRM11730

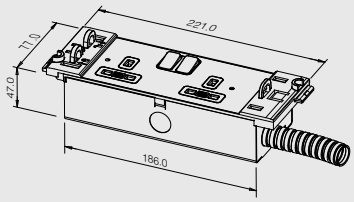

DIMENSIONS (mm)		
	3 MODULE	4 MODULE
A	287	362
B	287	287
C*	266	341
D*	266	266

* Tile cut out general tolerance = +1.5mm.

The table below shows the sizes required for the carpet lid infill for the Cablelink Plus Modular floorboxes.

	265X265mm		340x265mm	
	X	Y	X	Y
Carpet Infill (mm)	251	219	326	219

Knockouts

	END KNOCKOUT (CONDUIT ENTRY)		SIDE KNOCKOUT (INTERLINK)
	20mm	25mm	20mm
Power	2	–	2
Non-Power	1	1	2
6 x LJU6C Only (CRM21301)	–	2	2

Cat 6 and Cat 7 Compatibility

With the introduction of Cat 6 and Cat 7 data cabling the orientation and depth of many data outlets has changed resulting in the need for greater backbox depths and wiring space to accommodate these longer data outlet. No longer is a 35mm wiring space sufficient to ensure data terminations can be made to the manufacturer's recommendations to prevent transmission losses. As a result MK has introduced 45mm wiring space for the Cablelink Plus floorbox systems (as well as for the Prestige 3D wall trunking system).This easily accommodates the longer Cat 6 and Cat 7 data outlets and leaves sufficient space for the data cable to run underneath it.

Cablelink Plus Modular Technical

Cablelink Plus Modular Floorbox

Installing Modules into the Cablelink Plus Modular Floorbox

To install a module into the Cablelink Plus Modular floorbox, firstly ensure the sliding bracket is pushed towards the centre of the module.

1 Lower the opposite end into the box and push the tab firmly into the slot in the ladder at the height the module should be positioned.

The other end is then lowered down so that the tab on the sliding bracket is level with the same slot on the other side of the frame.

2 Holding the module with the built in handles, the sliding bracket is then pushed outwards so that the tab engages with the correct slot.

A screw is then used to fix the sliding bracket in place.

Fix the retaining clips to each end of each module and frame.

The module is now secure. The procedure is reversed in order to remove a module.

Dual Earth Sockets and High integrity Earthing†

Modern offices, schools, universities, laboratories etc, are heavy users of IT, computing and electronic equipment. As most of this equipment is fitted with a filter mechanism to protect data and data transmission against RFI and power surges, small earth leakages emanating from this equipment introduces a current onto the Circuit Protective Conductor (CPC) effectively turning this into a functional earth.

Should the CPC be broken, any equipment downstream of the break is no longer connected to earth. If a fault now occurs in this equipment, the CPC could rise to the mains potential and the fault transferred to other equipment on the circuit. The implicit risks to equipment, data and most importantly users in this situation are dealt with in the 17th Edition of the IET Wiring Regulations†, and have led MK Electric to introduce Dual Earth Sockets.

Dual Earth Sockets allow the designer and installer to maintain the earth integrity of the system, in accordance with the 17th Edition of the IET Wiring Regulations† is intended to maintain at all times the CPC to ensure safety.

Clean Earth Sockets

Clean Earth Sockets allow the designer and installer to introduce a protective conductor connecting sensitive equipment i.e. a computer, directly to the main earth.

This reduces the possibility of ‘noise’ occurring on the protective conductor through induced voltages from other equipment, and hence can have benefits in maintaining data and data transmission integrity.

Earthing on Data modules for Modular Raised

Earthing studs are provided on all Unserviced data modules to enable a reliable connection to earth to be made. Earthing Kit CX-10 is recommended for use to ensure the earthing cable is connected correctly.

† In the 17th Edition of the IEE Wiring Regulations, these requirements are found in Regulation 543.7.

Cablelink Plus Modular Technical

Serviced Power Modules

- Modules are available Left Hand and Right Hand to achieve a 'staggered' arrangement
- 'Staggered' arrangement ensures strain relief clearance for moulded plug tops
- Add '**RH**' suffix for Right Hand Module, e.g CRM11730**RH**
- When four socket outlets are required, order CRM11750 'staggered' arrangement is built in

3 Compartment Boxes

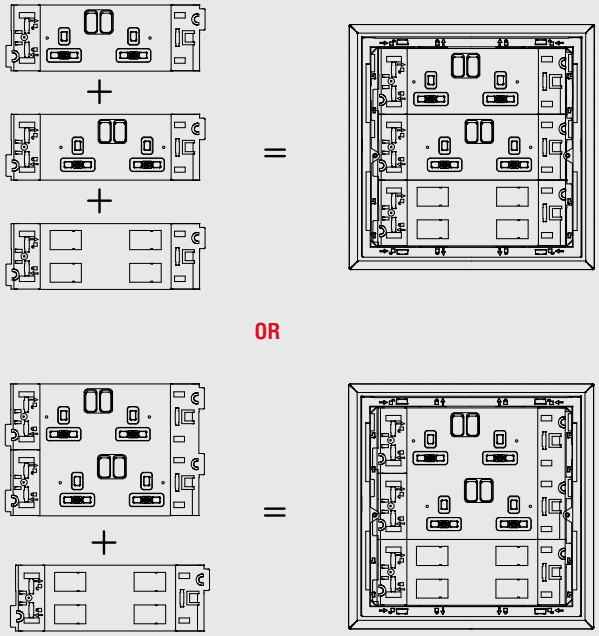

Installing Cablelink Plus Modular Floorbox – Blades

- Quick release blades to secure firmly in position for a "fit and forget" installation
- No tools required for faster installation
- Self adjusting blades – ensures floorbox remains secure throughout service life
- Fixes to floor thicknesses of 15-50mm

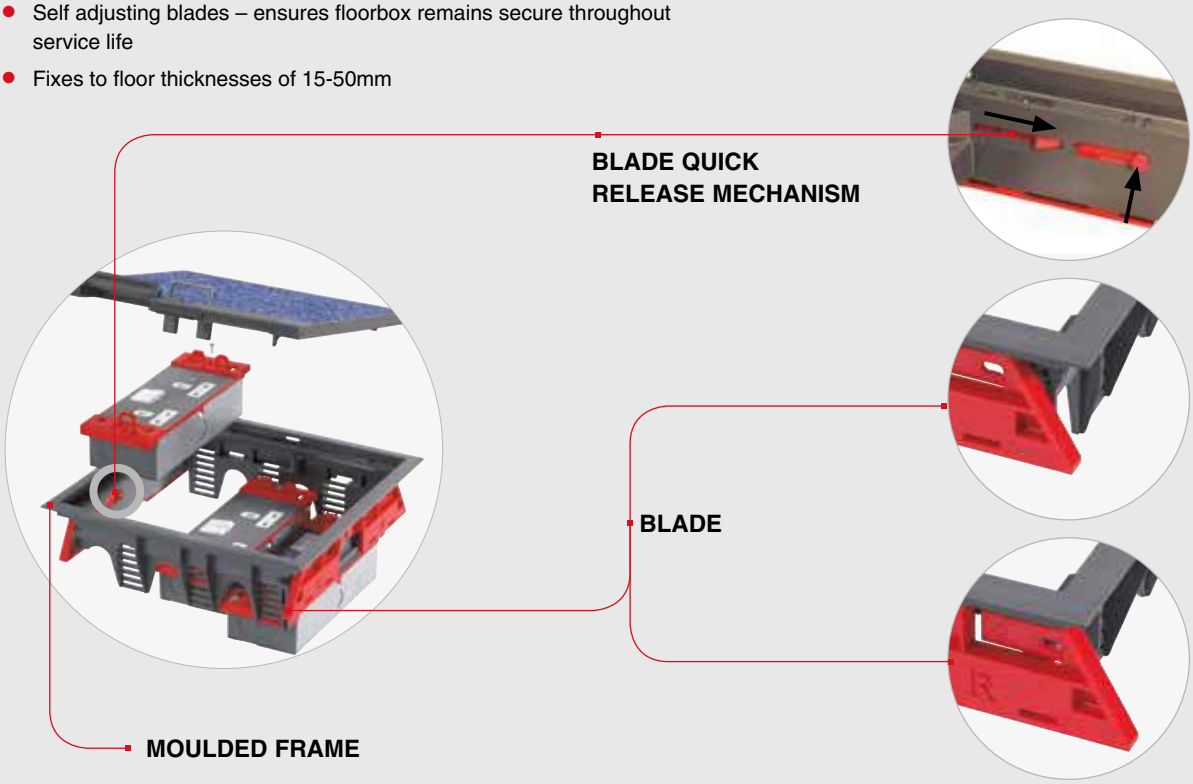

Cablelink Plus Single Pan Technical

Cablelink Plus Single Pan

Standards and Approvals

The Cablelink Plus Single Pan Box supports compliance with the latest edition of the IET Wiring Regulations (BS 7671) and to BS EN 50085 Part 1 and EN 50085 Part 2-2.

Additionally the floorboxes also comply with IEC 60670 Parts 1 and 23.

TECHNICAL SPECIFICATION

MATERIALS

PLASTIC COMPONENTS
Manufactured from UL94 V2 rated nylon.

METAL COMPONENTS
Manufactured from pre-galvanised steel.
Accessory plates are powdercoated or colour coated.

RAL COLOURS
Grey (GRY) = RAL 7011

Feature benefits

- Tested to BS EN 50085-2-2 to accept 5000N load
- Designed to support Cat 6 and Cat 7 structured cabling systems
- 70mm pan depth has been designed for those applications with shallow voids
- Self closing lid in accordance with IEC 61534-22
- Quality, reliability and safety come as standard
- Provision of RCD protection supports compliance with the 17th Edition Wiring Regulations
- 5 year guarantee

Installation

Cablelink Plus Single Pan boxes should not be installed in the following situations:

- Where protruding electrical cables are likely to cause a safety hazard
- In passageways, especially where trolleys or other vehicles may be used
- On escape routes, as this may impede the evacuation of the occupants from the building
- Where the cleaning methods employed result in the formation of pools of liquid or soaking of the floor surface
- Desks, chairs, shelving, filing cabinets should not be positioned on the floorbox as this will interfere with opening the lid

Cat 6 and Cat 7 Compatibility

With the introduction of Cat 6 and Cat 7 data cabling the orientation and depth of many data outlets has changed resulting in the need for greater backbox depths and wiring space to accommodate these longer data outlet. No longer is a 35mm wiring space sufficient to ensure data terminations can be made to the manufacturer's recommendations to prevent transmission losses. As a result MK has introduced 45mm wiring space for the Cablelink Plus floorbox systems (as well as for the Prestige 3D wall trunking system.) This easily accommodates the longer Cat 6 and Cat 7 data outlets and leaves sufficient space for the data cable to run underneath it.

Load Testing

Load Testing of Floorboxes to BS EN 50085 Part 2-2 (Clauses 10.5.103 and 10.5.104).

The floorboxes have been tested to and comply with the loading requirements of EN 50085 Part 2-2 (Cable trunking systems and cable ducting systems for electrical installations Part 2-2: Particular requirements for cable trunking systems and cable ducting systems intended for mounting underfloor, flushfloor, or onfloor).

There are two loading criteria for the floorboxes – one with a point loading to replicate foot traffic for example, and the other, with a large plate to replicate fork trucks and heavier larger loads for example. For both loading criteria the maximum allowable deflection under load is 6mm and the maximum permanent deflection after the load has been removed is 3mm.

The Lid Deflection (loading) graph shows that the maximum point loading classification achieved is 3kN and the maximum large plate loading classification achieved is 5kN.

The Permanent Deflection graph shows the permanent deflection from the test wheel loading at 3kN is 0.55mm and large plate loading at 5kN is 0.4mm. This is well within the maximum allowable deflection of 3.0mm. The loading position is the centre of the lid.

Lid Deflection – Cablelink Plus 265x265mm Frame Assembly

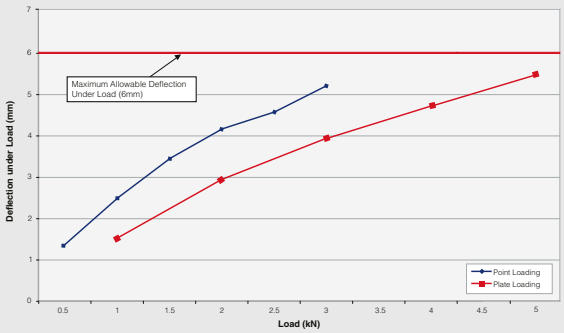

Permanent Deflection After Removal of Load – Cablelink Plus 265x265mm Frame

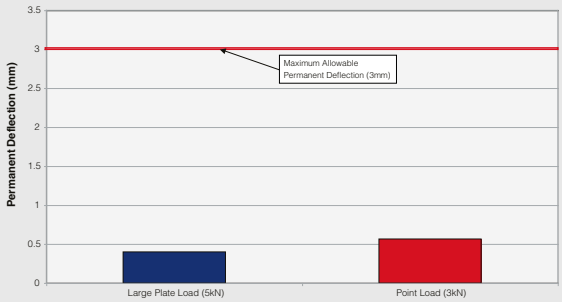

For a full range of corresponding products, see pages 383-386 in the product selector.

Cablelink Plus Single Pan Technical

Cablelink Plus Single Pan

Floorbox: Tile and Frame and Floor Tile Cut-Out Dimensions

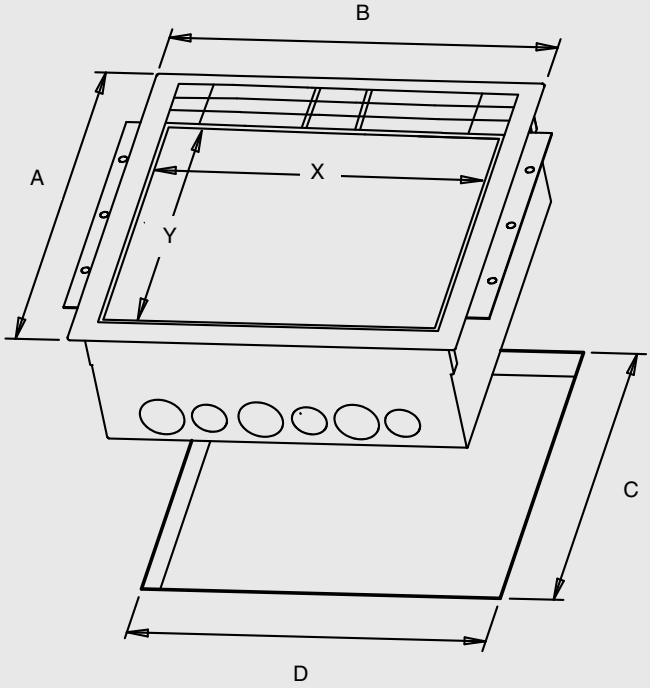

DIMENSIONS (mm)			
	CRB100	CRB265	CRB340
A	130	287	287
B	222	287	362
C*	115	275	275
D*	206	272	350

* General tolerance = +1.5mm.

The table below shows the sizes required for the carpet lid infill for the Cablelink Plus Single Pan Floorboxes.

DIMENSIONS (mm)				
	CRB100		CRB265	
	X	Y	X	Y
Carpet Infill	93	152	251	219

Knockouts

1 compartment box is supplied with 20 and 25mm knockouts. 3 and 4 compartment box is supplied with 2 x 20mm, 1 x 25mm, 1 x 32mm knockouts respectively, per compartment.

† In the 17th Edition of the IET Wiring Regulations, these requirements are found in Regulation 543.7.

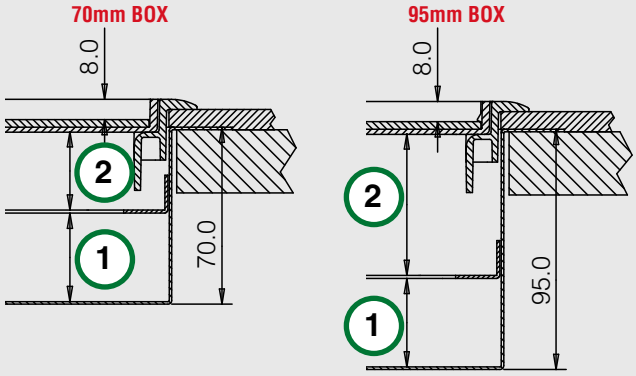

1. Wiring Space. Please see table below for dimensions.
2. This dimension assumes a floor covering thickness of 8.0mm. A thinner covering will reduce this dimension accordingly.

Plug Top Clearances

DIMENSIONS (mm)		70mm BOX	95mm BOX
1	Wiring Space	35	45
2	Plug Top Clearance	31	46

Plate Dimensions (mm)

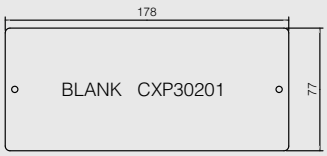

Dual Earth Sockets and High integrity Earthing†

Modern offices, schools, universities, laboratories etc, are heavy users of IT, computing and electronic equipment. As most of this equipment is fitted with a filter mechanism to protect data and data transmission against RFI and power surges, small earth leakages emanating from this equipment introduces a current onto the Circuit Protective Conductor (CPC) effectively turning this into a functional earth.

Should the CPC be broken, any equipment downstream of the break is no longer connected to earth. If a fault now occurs in this equipment, the CPC could rise to the mains potential and the fault transferred to other equipment on the circuit. The implicit risks to equipment, data and most importantly users in this situation are dealt with in the 17th Edition of the IET Wiring Regulations, and have led MK Electric to introduce Dual Earth Sockets.

Dual Earth Sockets allow the designer and installer to maintain the earth integrity of the system, in accordance with the 17th Edition of the IET Wiring Regulations is intended to maintain at all times the CPC to ensure safety.

Clean Earth Sockets

Clean Earth Sockets allow the designer & installer to introduce a protective conductor connecting sensitive equipment i.e. a computer, directly to the main earth.

This reduces the possibility of 'noise' occurring on the protective conductor through induced voltages from other equipment, and hence can have benefits in maintaining data and data transmission integrity.

Grommets Technical

Grommets

FEATURE BENEFITS

- Rotary and split lid variations available to meet all requirements
- One touch self-adjusting mechanism for a fast, simple and secure installation
- Available in 5" and 8", grey for flexibility of use
- 5 year guarantee

GROMMET TECHNICAL DIMENSIONS

LIST NO.	DESCRIPTION	DIAMETER	OVERALL DEPTH	FLOOR TILE	CUT-OUT	KNOCKOUT	ACCESSORY CUT-OUT
GR500	Simple Access Grommet	142mm	50mm	All	127mm (+/-1mm)		
GR510	Secure Access Grommet	142mm	60mm	30 – 50mm	127mm (+/-1.5mm)		
GR100	Split Lid Grommet	142mm	60mm	30 – 50mm	127mm (+/-1.5mm)		
GR200	Power Grommet BS 1363 MK SSO	142mm	85mm	30 – 50mm	127mm (+/-1.5mm)	20mm x 3	
GR201	Power Grommet MK Non-Std SSO	142mm	85mm	30 – 50mm	127mm (+/-1.5mm)	20mm x 3	
GR5050	50mm x 50mm Accessory Grommet	142mm	85mm	30 – 50mm	127mm (+/-1.5mm)		50mm x 50mm Euro frame fitted
GR800	2 x LJU6C Grommet	142mm	85mm	30 – 50mm	127mm (+/-1.5mm)		36.7mm x 22.2mm
GR850	Simple Access Grommet	233mm	85mm	30 – 50mm	209mm (+/-1.5mm)		
GR855	Secure Access Grommet	233mm	85mm	30 – 50mm	209mm (+/-1.5mm)		

For a full range of corresponding products, see pages 391-394 in the product selector.

DeskPod™ Technical

DeskPod™

Standards and Approvals

The DeskPod™ range is designed & tested to BS 5733 (General requirements for electrical accessories). The sockets are designed and tested to BS 1363 Part 2 (Specification for 13A switched and unswitched socket-outlets).

DeskPod™ is designed to be used in electrical installations to BS 7671 and, with certain restrictions, in installations complying with BS 6396. Further information regarding BS 6396 is given below.

BS 6396:2002: Electrical systems in office furniture and office screens – specification
MK can supply desk modules that may be used in installations complying to BS 6396.

TECHNICAL SPECIFICATION

MATERIALS

MAIN HOUSING
Anodised aluminium extrusion.

MOULDINGS
High impact, flame retardant grade of polycarbonate.

INTERNAL WIRING
Single cables insulated in low smoke, low fume grade of material to BS 7211.

POWER LEADS
Multicore flexible cable to BS 6500. Insulation PVC (low smoke and fume available on request).

FEATURE BENEFITS

- Custom designed and versatile to suit all requirements
- Choice of factory fitted sockets
- Ease of installation – available with pre-wired tap-offs
- Breadth and flexibility of range to suit all specifications
- Manufactured from anodised aluminium and polycarbonate – chemical, colour fade, impact resistant and flame retardent
- Quality, reliability and safety come as standard
- Provision of RCD protection supports compliance with the 17th Edition Wiring Regulations
- 5 year guarantee

3.15A and 5A

3.15A & 5A fuses 5x20mm to BS EN 60127-2:2003 time lag, high breaking current

For a full range of corresponding products, see pages 395-401 in the product selector.

General

The following restrictions are placed on these desk modules:

- Maximum current rating = 13A and maximum voltage rating = 250V ac
- The supply cord must connect to the permanent electrical installation via a standard 13A plug to BS 1363-1
- All sockets, connected to a single supply, must be protected as follows:

Up to 4 sockets

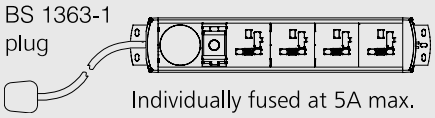

Up to 6 sockets

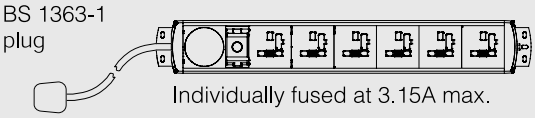

- No more than six sockets can be connected to a single supply
- No single item of equipment having a rated voltage greater than 250V and rated current greater than 5A must be connected to the desk module
- The desk module must be connected to an electrical supply that has a protective (Earth) conductor

The completed installation must be inspected and tested for:

- Continuity and polarity of the conductors
- Insulation resistance
- Earth continuity

Details of the tests are given in the installation instructions. These tests must be carried out whenever the system is reconfigured.

It is recommended that the installation is periodically maintained, inspected and tested. For full details of the requirements for the rest of the installation refer to BS 6396.

Dimensions

The nominal length of each configuration can be estimated using the dimensions shown in the custom design section of this brochure. eg: Part number DP P4010.

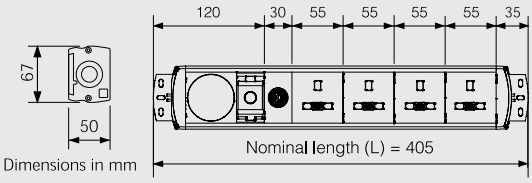

Fixing Centres

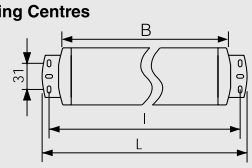

Bracket retracted (B)/Screw fixing pitch (l)
= Nominal length (L) - 17mm
(Bracket extended)

E.g. DP P4010 = 405 - 17mm = 388mm

Onix Plus™ Floorboxes

Standards and Approvals

These products are designed to withstand heavier than normal traffic loading as found in office buildings. The Onix Plus™ range supports compliance with the requirements of the 17th Edition of the IET Wiring Regulations (BS 7671) and to BS EN 50085 Part 1 and EN 50085-2-2. Additionally the floorboxes also comply with IEC 60670 Parts 1 and 23.

TECHNICAL SPECIFICATION

MATERIALS

BOX LID AND FRAMES
Lid, load plate and frame manufactured in stainless steel. Cord Outlet mouldings are manufactured from a UL94 V2 rated nylon.

POWER GROMMET
Service outlet is die cast aluminium, brass or nickel plated brass. The base unit is pre-galvanised steel. Plastic parts are polycarbonate.

RAL COLOURS
Grey (GRY) = RAL 7011
Beige (BEG) = RAL 1019

FEATURE BENEFITS

- Wet washable and IP44 when not in use
- Tested to EN 50085-2-2 to accept 10,000N load (5,000N load for Onix Plus Grommet)
- Selection of lid recess depths available, allowing for various floor depths
- Designed to support Cat 6 structured cabling systems
- Wide range of power and data accessories available to meet all requirements
- Quality, reliability and safety come as standard
- Provision of RCD protection supports compliance with the 17th Edition of the IET Wiring Regulations (BS 7671)
- 5 year guarantee

Wet Wash Test

The plain lid and the centre Snorkel outlet lids have an Ingress Protection rating of IP44, according to BS EN 60529:1992

Centre Cord Outlet Restrictions

This applies to the Snorkel Cord Outlet lid.

For a full range of corresponding products, see pages 403-411 in the product selector.

* The Snorkel cord outlet cannot be used in depths less than 100mm.

CENTRE CORD OUTLET **EDGE CORD OUTLET** **BLANK LID**

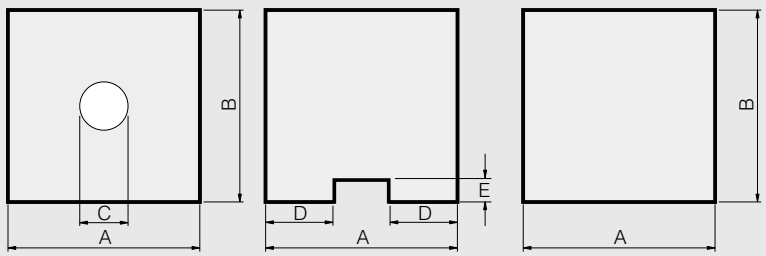

Lid Recess Dimensions

The dimensions in the table provide the sizes for the floor covering insert for the lid.

DIMENSION (mm)					
BOX SIZE	A	B	C	D	E
200x200mm	183	183	102	31	45
265x265mm	248	248	102	63	45
340x340mm	323	323	102	101	45

Note: Due to the weight of the lid and floor covering, a tile lifter, not the cord outlets, should be used to lift these lids.

Screed Depth Table – for Snorkel Lid with Flush Accessories

WIRING SPACE (mm)	FLOOR TILE THICKNESS – INCLUDING ADHESIVE (mm)	MINIMUM SCREED DEPTH (mm)	MINIMUM FINISHED FLOOR DEPTH (mm)
25	15	85	100
25	20	80	100
25	25	75	100
25	30	70	100
35	15	95	110
35	20	90	110
35	25	85	110
35	30	80	110
45	15	105	120
45	20	105	120
45	25	95	120
45	30	90	120

- Decide Wiring Space required: 25mm, 35mm or 45mm
- Decided Floor Tile Thickness. (This must align with the lid depth choice)
- Read across to determine the minimum screed depth and subsequent finish floor thickness

Note: When using the wave plate (CXP20215 / CXPC20215) or ST fibre plate (CXP20500 / CXPC20500) the minimum screed depth and minimum finished floor depth must be increased by 15mm. This will result in restrictions when utilising a 45mm wiring space.

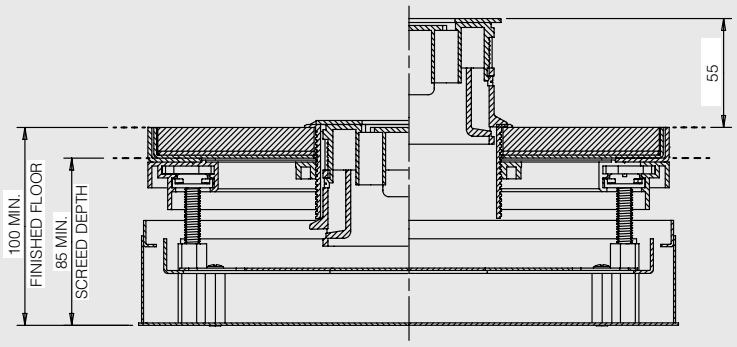

Onix Plus™ Technical

Onix Plus™ Floorboxes and Power Grommets

Load Testing

Load Testing of Floorboxes to BS EN 50085 Part 2-2 (Clauses 10.5.103 and 10.5.104).

The floorboxes have been tested to and comply with the loading requirements of BS EN 50085 Part 2-2 (Cable trunking systems and cable ducting systems for electrical installations Part 2-2: Particular requirements for cable trunking systems and cable ducting systems intended for mounting underfloor, flushfloor, or onfloor).

There are two loading criteria for the floorboxes – one with a point loading to replicate foot traffic for example, and the other, with a large plate to replicate fork trucks and heavier larger loads for example. For both loading criteria the maximum allowable deflection under load is 6mm and the maximum permanent deflection after the load has been removed is 3mm.
The loading position is the centre of the lid.

The Lid Deflection (loading) graph shows that the maximum test wheel loading classification achieved is 3kN and the maximum large plate loading classification achieved is 10kN.

The Permanent Deflection graph shows the permanent deflection from the test wheel loading at 3kN is 0.8mm and large plate loading at 10kN is 1.65mm. This is well within the maximum allowable deflection of 3.0mm.

Note: This test data specifically refers to the 265 x 265mm sized cord outlet box assembly. The other floorbox sizes also comply with the required test criteria. Declarations of conformity are available on request for the entire range.

Lid Deflection – Onix Plus Cord Outlet Lid 265x265mm

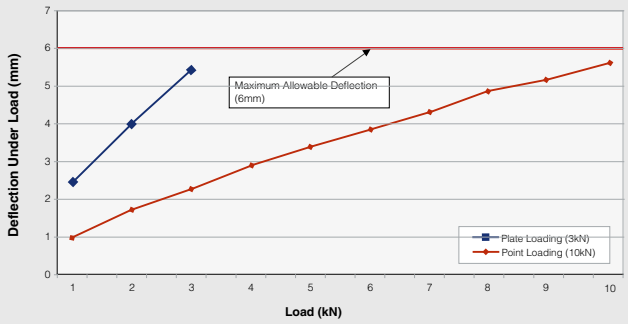

Permanent Deflection After Removal of Load – Onix Plus 265x265mm Cord Cap Lid

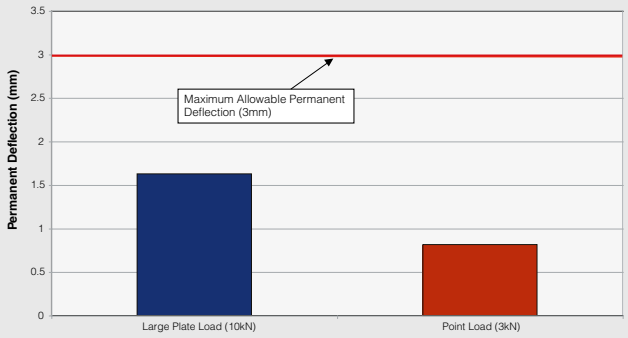

Metal Power Grommet Dimensions

The Metal Power Grommet is designed to be used in conjunction with the Screed Base Unit, part number NXGB100-1 or NXGB100X-1, depending on the depth of the screed.

Onix Grommets are designed to be IP44 rated when the lid is closed, allowing the floor to be washed.

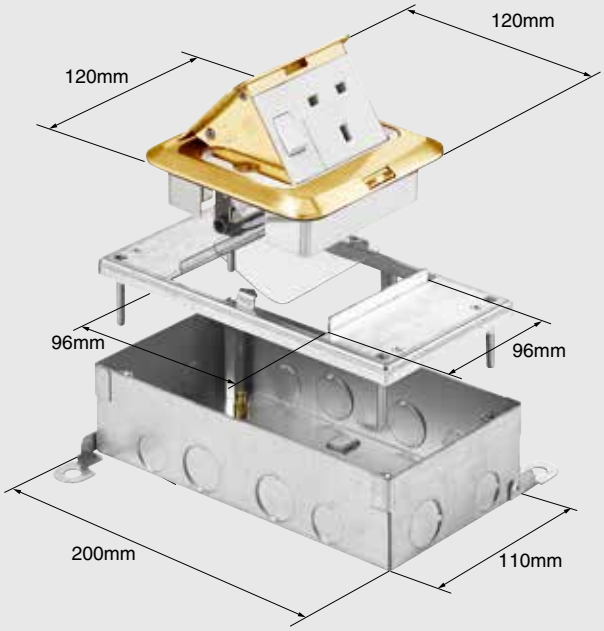

BASE UNIT	NXGB100-1	NXGB100X-1
Screed Depth (mm)	55-80mm	80-110mm

Onix Plus™ Floorboxes and Power Grommets

Installation of Snorkel Lid

1. The base unit is fixed to the slab and the ducts or conduits are fed into the base using the appropriate side entry plate.
2. The disposable screed cover is fitted to prevent the ingress of screed through the top. All areas of the box which may be susceptible to screed ingress should be sealed.
3. The Lid frame should be assembled and fitted after the disposable screed lid has been removed and the gasket can now be fitted.
4. The lid is supplied with an earth lead and must be bonded to earth for all power applications. As the lid is only installed when the floor covering is laid there is less chance the surface finish of the lid will be damaged.
5. A floor covering insert is required for the lid recess. The dimensions for the insert are given in the Lid Recess Dimensions section see page 685.
6. Sealing compounds are required for products that are for use in wet wash environments.
7. The bases are supplied with 35mm wiring space, but with the option to reduce to 25mm or increase to 45mm with the Cuba-1 height adjustment kit.

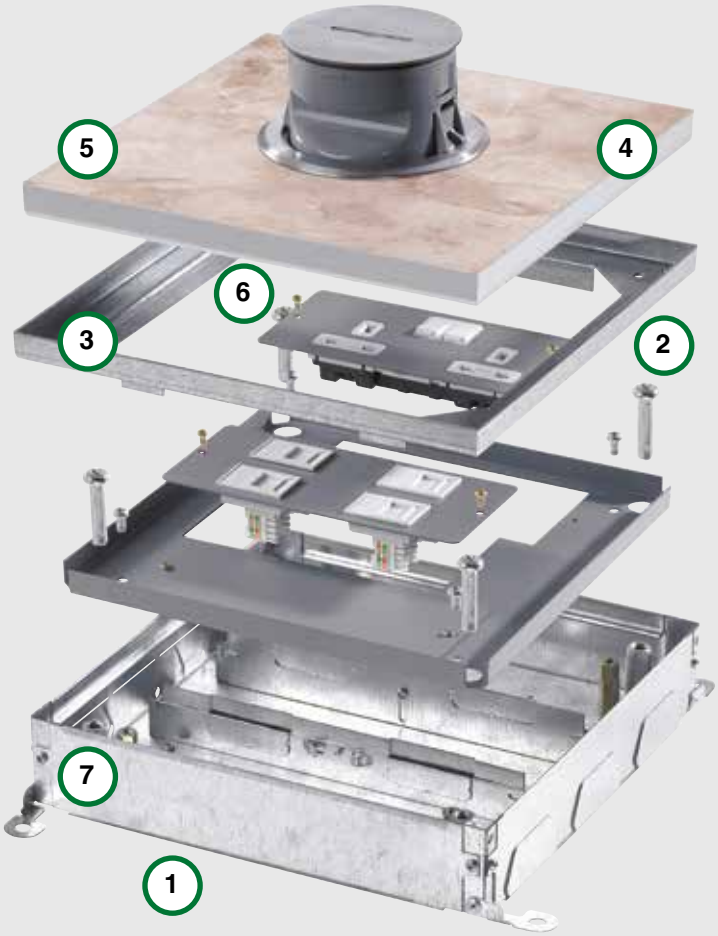

How to Install the Gasket

Identify the gaskets

The wider gasket is used in the frame and the narrower gasket is used on the lid. The gaskets are designed to sit next to one another, not one on top of the other.

2 Ensure gasket is clean

Ensure both lid and frame are dry, clean and free from oily deposits and debris such as grout and screed.

If replacing the gaskets ensure all traces of existing gasket and adhesive have been removed. An alcohol wipe will aid the removal of the adhesive backing.

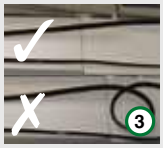

Ensure gasket is straight

The gasket must have no twists in it. Any twists will result in the gasket not fitting and functioning correctly.

Fitting lid gasket

Start the lid gasket on the underside of the lid as close to the outer edge as possible, approximately half way along the length. Ensure the gasket runs underneath the Earth bonding cable. Do not run the gasket past the first corner at this stage.

Identify the gaskets

Butt the other end of the gasket to the start to ensure a good join. This also ensures the gasket is not stretched unduly.

Continue fitting the gasket around the edge of the lid keeping the corners as close to 90° as possible, until complete.

Fitting frame gasket

Start the frame gasket as close to the inner edge as possible, approximately half way along the length. Ensure the gasket runs underneath the Earth bonding cable. Do not run the gasket past the first corner at this stage.

Fitting frame gasket

Butt the end of the gasket to the start to ensure a good join. This also ensures the gasket is not stretched unduly.

Fitting frame gasket

Continue fitting gasket around the inner edge of the frame, ensuring the gasket runs to the outside of the screw hole, until complete.

Onix Plus™ Technical

Onix Plus™ Floorboxes and Power Grommets

Screed Depth – 25mm, 35mm and 45mm Wiring Space

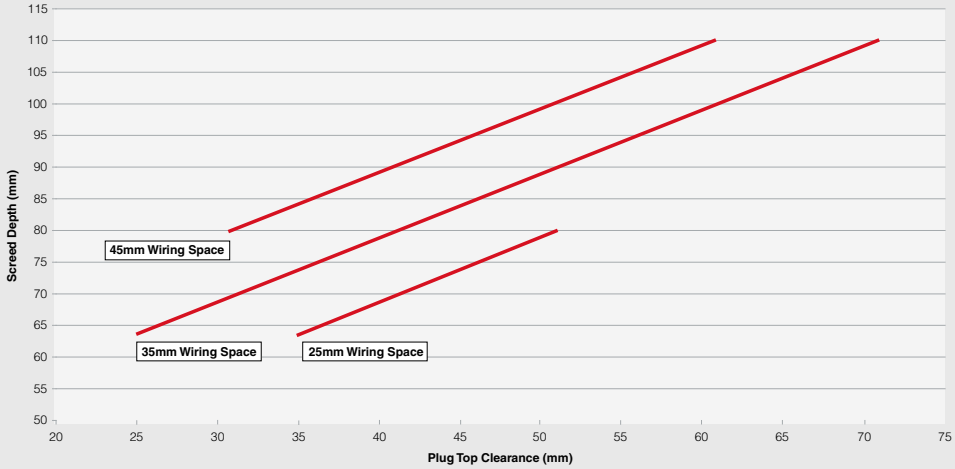

Installation of Metal Power Grommets

1. The Screed Base Unit, is laid onto the concrete slab. There are two Screed Bases available depending on the screed depth.
   - Screed depth between 55mm and 80mm use **NXGB100-1**
   - Screed depth between 80mm and 110mm use **NXGB100X-1**

   A metal plate supplied with the Screed Base Unit to keep the screed out of the interior of the box.

   After screeding the mounting plate is fitted and the floor covering is laid.

2. The grommet top is installed after the floor covering is laid. The lid is simply screwed into position until tight with the floor.

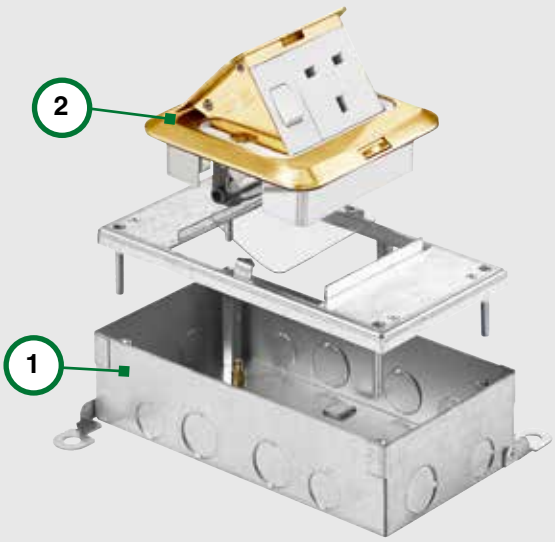

Cat 6 Compatibility

With Cat 6 data cabling the orientation and depth of many data outlets has changed, resulting in the need for greater backbox depths and wiring space to accommodate these longer data outlet. No longer is a 35mm wiring space sufficient to ensure data terminations can be made to the manufacturer's recommendations to prevent transmission losses. 45mm wiring space for the Cablelink Plus floorbox system is available.

Cablelink Plus Screed Technical

Cablelink Plus Screed System

Standards and Approvals

Cablelink Plus Screed System range complies with the relevant requirements of the latest edition of 17th Edition of the IET Wiring Regulation (BS 7671) and to BS EN 50085 Part 1 and BS EN 50085 Part 2-2. Additionally the floorboxes also comply with IEC 60670 Parts 1 and 23. The metal used complies to the requirements of BS EN 10327:2004

FEATURE BENEFITS

- Tested to BS EN 50085-2-2 to accept 5000N load
- The system incorporates numerous design features to ensure a fast and simple installation
- Designed to support Cat 6 & Cat 6A structured cabling systems
- Suitable for screeded depth from 55mm to 110mm (Height adjustment kits and floor coverings must be used)
- Minimum finished floor thickness (including carpet, tile etc) is 74mm, with a 35mm wiring space. Can be reduced to 64mm if a 25mm wiring space can be utilised. (A CUBA-1 adjustment kit must be used)
- Floorboxes are IP2X rated in accordance with BS EN 50085-1
- Choice of 1, 2, 3 or 4 compartment floorboxes
- Self Closing lid in accordance with IEC 61534-22
- Wide range of power and data accessories available to meet all requirements
- PVCu ducting manufactured from 100% recycled material*
- Quality, reliability and safety come as standard
- Provision of RCD protection supports compliance to the 17th Edition of the IET Wiring Regulation (BS 7671)
- 5 year guarantee

TOP TIPS

- Distance between two junction boxes must not exceed 6 metres
- **Service Outlet Boxes** – fixed only on branch ducts and not on header ducts. Fixing service boxes on the header ducts affects cable capacity and constricts the header
- **Workstations** – locate over Service Outlet Boxes so that it does not interfere with normal office traffic

Layout

In order that the installation may exhibit the desired flexibility, the ducting is usually laid out on either a Grid, Fishbone or a Comb Pattern of single, double or triple runs.

A **Grid Pattern** is widely used in areas where the occupants require the highest degree of flexibility in reorganising work areas. Capacity can be increased by returning individual ring mains through different runs of duct which in itself allows easier installation.

The **Fishbone Pattern** is ideal for a medium sized area where lesser boxes are required.

The **Comb Pattern** is the most economical way of installation where least duct is used. The comb pattern is suited for medium to small office areas.

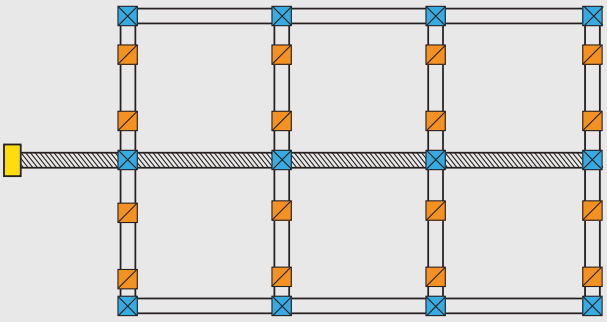

Grid pattern

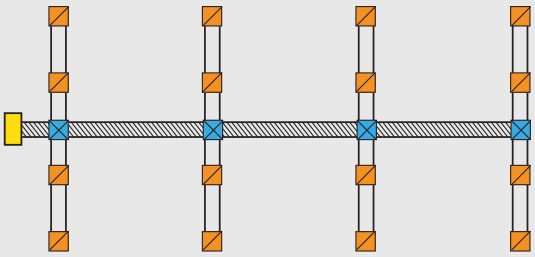

Fishbone pattern

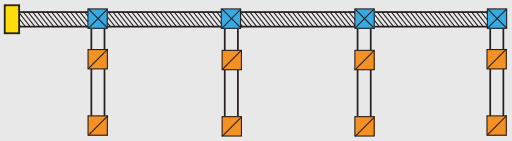

Comb pattern

Header Runs
Service Outlet Box
Vertical Access Box
Universal Junction Box
Branch Runs

For a full range of corresponding products, see pages 413-424 in the product selector.

* based on 2014 consumption

Cablelink Plus Screed Technical

Cablelink Plus Screed System

Cable Capacity Guide

The cable factor table below is based on the 17th Edition of the IET Wiring Regulation (BS 7671) and must be regarded only as a guideline. Care should be taken in selecting adequate trunking sections taking into consideration the number and size of cables involved and construction of the junction box. It is recommended that the initial design of trunking installations include adequate provision for future wiring. To determine the size of the trunking required, multiply the quantities of each size of conductor and appropriate factor from Table A and compare the total with the capacity unit figure in the appropriate Table B.

TABLE A – CABLE FACTORS

CABLE TYPE	CSA	CABLE FACTOR
POWER CABLES		
PVC Stranded	1.5mm²	8.6
	2.5mm²	12.6
	4mm²	16.6
	6mm²	21.2
	10mm²	35.3
	16mm²	47.8
	25mm²	73.9
Twin & Earth	2.5mm²	86
	4mm²	99
	6mm²	148
DATA CABLES		
Cat 5E UTP	5.5mm dia	30.2
Cat 5E STP	6.0mm dia	36
Cat 6 UTP	6.5mm dia	42.2
Cat 6 STP	7.0mm dia	49
Cat 6A	8.0mm dia	64

Sample calculation

To estimate the total number of cables that can be accommodated with a 100 x 38mm ducting:

Step 1 Pick the factor from Table B corresponding to 100 x 38 = 1563

Step 2 Select the size of the cable that needs to be pulled through the trunking and its corresponding factor from Table A e.g. 4mm² stranded = 16.6

Step 3 No. of cables = Value from (Table B / Table A) e.g. 1563/16.6 = 94 Cables.

TOP TIPS

- The number and location of boxes will depend on the end user requirements
- If the furniture layout is available, a floor box should be considered for each workstation or desk
- If the final furniture layout is not available as a general guide the minimum recommended distribution is one floor box for every 10m², and the maximum being one floor box per 4m²

TABLE B – METAL SCREED DUCTING CABLING CAPACITY

SIZE (MM)	COMPARTMENT SIZE	CAPACITY 100%	CAPACITY (45% FILL)
100 x 38	100 x 38 (1 comp)	3474	1563
225 x 38	112 x 25 (2 comp) 75 x 38 (3 comp)	3940 2613	1773 1176
250 x 38	13 x 38 (3 comp)	2909	1309
275 x 38	91 x 38 (3 comp)	3206	1443
300 x 38	100 x 38 (1 comp)	3503	1576

Cablelink Plus Screed System ducting complies with BS EN 50085-1:2005 and BS EN 50085-2-2:2008.

The above table gives the available capacity units on 45% factor, applied to the internal wiring area.

Carpet Cut out Dimensions

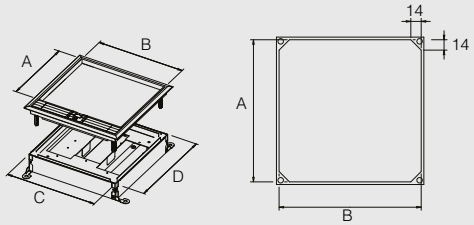

The table below shows the sizes required for the carpet lid infill and carpet tile cut out for the Cablelink Plus Screed Floorboxes.

LID LIST NUMBER	CARPET LID INFILL DIMENSIONS (mm)	
	A	B
CXL100	152	93
CXL265	219	251
CXL340	219	326
CUJL200	188	188
CUJL265	253	253
CUJL240	328	328

BASE LIST NUMBER	BOX CARPET CUT OUT DIMENSIONS (mm)	
	C	D
CUB100	100	100
CUB265	265	265
CUB340	340	340
CUJ200	200	200
CUJ265	265	265
CUJ240	340	340

DUCTING CABLE CAPACITY – DATA CABLES

DUCTING CAPACITY mm²	60MM DUCTING		90MM DUCTING	
	1025		2300	
NOMINAL CABLE DIAMETER mm²	NUMBER OF CABLES			
	60mm DUCTING		90mm DUCTING	
	@50%	@75%	@50%	@75%
5.5	17	25	38	57
6	14	21	32	48
6.5	12	18	27	41
7	10	15	23	35
8	8	12	17	26

Cablelink Plus Screed Technical

Cablelink Plus Screed System

Cablelink Plus Screed Service Box

Materials UL94 V2 rated nylon, Pre-galvanised steel.

Strength The floor outlet boxes are capable of resisting minor accidental loading when rigidly supported under the outer rim of the cover frame.

Fire The outer casing of the floor outlet box is manufactured from metal and is non-combustible. The 8mm recess frame and lid assembly is made from UL94 V2 rated nylon the 12mm recess frame and lid assembly is manufactured from metal and is non corrosive.

Chemical resistance Non corrosive.

Water absorption The floor outlet boxes are for use in situations where the cleaning method used does not result in the formation of pools of liquid or soaking of the floor surface.

Degree of protection Enclosure classification of IP2X when installed in accordance with the instructions set out in the installation guide.

Ambient Temperature Range

	MINIMUM	MAXIMUM
Handling and storage	-5°C	60°C
During installation	-5°C	60°C
Operating	-5°C	40°C

Average not to exceed 35°C in any 24 hour period.

RAL Colours

Grey (GRY) = RAL 7011

PVCu Ducting and Accessories:

Manufacture Duct straight lengths are extruded from 100% recycled PVCu. Fittings are formed by injection moulding*.

Appearance All PVCu duct and accessories are normally smooth, matt white finish.

Strength Heavy gauge, medium impact resistance under normal conditions.

Fire Non flame propagating. Class 1 spread of flame.

Chemical resistance Non-corrosive and not affected by sea water. Excellent resistance to mineral acids, alkalis and detergents but liable to attack from solvents such as alcohol, ketones, aromatics and hydrocarbons.

Vermin Resistant to vermin and termites.

Thermal Lower and upper limit of range of ambient temperature from -5°C to 60°C. All products are designed to accommodate local thermal expansion and fitting instructions cover differential movement at the interface with the building fabric. Thermal expansion co-efficient: 5.5 x 10-5/°C.

Electrical Duct is non-conductive.
Dielectric strength: 40kV/mm in DBP
17kV/mm in tx oil.

Volume resistivity: >1014 Ωcm.

Durability The product is stable within the terms and conditions described above and will maintain its performance characteristics.

Workability The duct is light weight and can be readily cut with hand tools. Short lengths can be readily incorporated and there is low wastage of material. Components and joints can be solvent welded together where necessary.

Metal Duct and Accessories

Material Pre-galvanised sheet steel.

Standard thickness 1.2mm. Standard 1mm available on request.

Standard length 2.44 metres.

No. of compartments 1, 2 or 3 compartments.

Standard depth 38mm (Different depths are available on request).

Couplers have to be ordered separately.

Pre-cut lengths can be arranged, subject to price confirmation and availability.

* based on 2014 consumption

Cablelink Plus Screed Technical

Cablelink Plus Screed System

Installation Guide for Underfloor Duct System

The structural floor slabs on which the underfloor ducts and boxes are to be laid must be reasonably level and smooth. Humps and protruding cement must be levelled to ensure the ducts being laid will maintain the minimum screed thickness of 25mm over the ducts. It is recommended that a layer of green screed be laid on the structural slab beneath the underfloor ducts to prevent air gaps and vacuum while screeding.

1 The floor slab where junction and service outlet boxes are to be laid should be marked out. The appropriate duct entry plates should be fastened to the boxes.

Ducts should be laid in straight lines between points of junction boxes and parallel to known base lines on each floor. Changes in direction of ducts should be made with junction boxes.

Use steel fixing clips to secure the ducts on to the floor slab prior to screeding. The intervals between two saddles should not exceed a maximum of 2 metres.

All joints in ducts and terminations of ducts in junction boxes / vertical access boxes should be made water tight with approved type sealing compound. Precaution should be exercised during construction to prevent damage to the ducts system and to ensure that the ducts and vertical boxes are free of water, dirt, debris or any other obstruction which may impede and / or damage the cables during pulling in.

2 Junction and service outlet boxes should be properly covered with the disposable lids and taped to ensure no cement gets into the boxes during screeding.

After screeding the disposable screed cover is removed and the cable installation can begin.

3 If extra space is required under the accessory mounting tray then height adjuster kits can be used. The cables can now be installed and the services terminated.

Note: The bases are supplied with 35mm wiring space, with the option to reduce to 25mm or increase to 45mm with a height adjustment kit – part number CUBA-1 see page 417.

4 The frame and lid assembly can now be fitted. Ensure the ratchet release is set to the lock position and align these with the ratchets in the accessory tray.

5 Apply gentle pressure until the frame is securely seated in the box and against the finished floor e.g. carpet or vinyl.

6 If the frame and lid assembly requires to be removed or rotated to ease cable egress then the ratchet releases should be rotated to the unlock position and the frame can be lifted out of the floorbox. The assembly can then be rotated and fixed as before.

Note: The lid should be completely removed from the frame before attempting to release the frame.

7 Attention must be paid to ensure there is both sufficient wiring depth and plug top clearance for the particular cables / plugs being used in each installation.

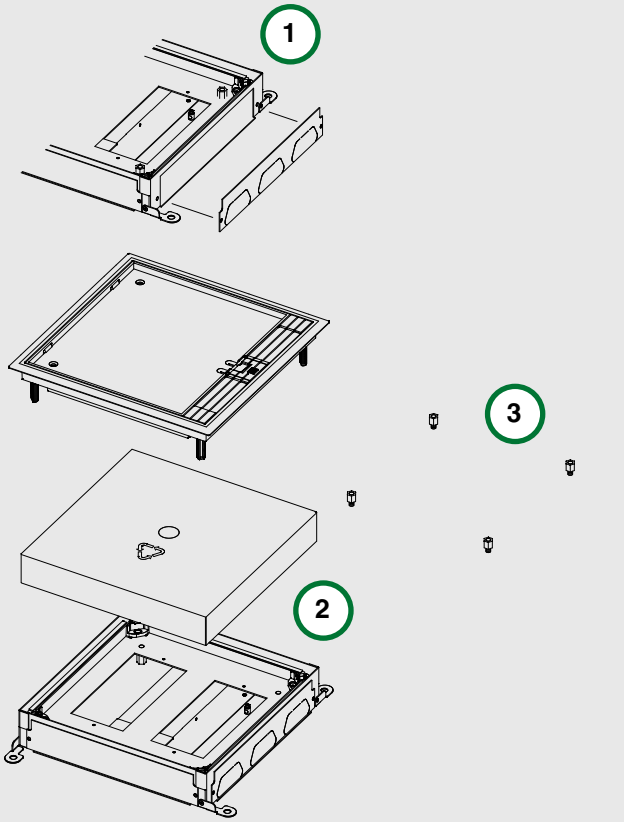

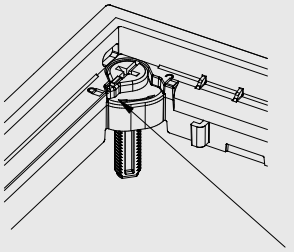

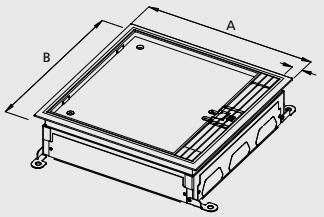

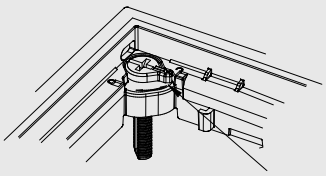

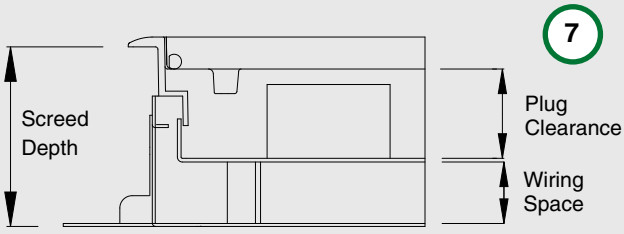

Cablelink Plus Screed Technical

Cablelink Plus Screed System

Screed Depth – 25mm, 35mm and 45mm Wiring Space

This graph enables the specifier / installer to determine which depth the screed (plus floor covering) must be in order to achieve a certain accessory wiring space and plug top clearance within the floorbox. For example if the specifier requires a 35mm standard wiring depth and a 45mm plug top clearance then the graph shows that an 82mm screed (plus 8mm non-compressible floor covering) depth is required. Alternatively, if the depth is fixed, at 90mm for example, then by having a 45mm wiring space the resulting plug top clearance will be 43mm. If additional plug top clearance is required then the wiring depth can be reduced to 35mm or even 25mm providing a plug top clearance of 53mm or 63mm respectively. Care must be taken to ensure there is sufficient wiring depth and plug top clearance for each individual installation. All these dimensions are based upon the floor covering being 8mm thick when fully compressed. If the floor covering is thicker or thinner then the screed depth must be reduced or increased as appropriate. When no floor covering is to be used the minimum screed depth with a 25mm wiring space is 64mm. For screed depths greater than 105mm, service boxes are provided with fixed wiring spaces of 75mm, 100mm, 125mm and 150mm respectively.

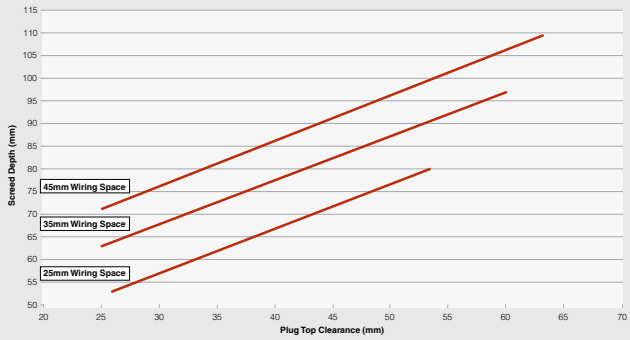

Vertical Access Boxes: Metal Ducting

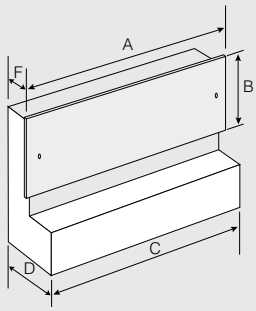

LIST NUMBER	TO SUIT BOX	COVER PLATE DIMS	
		A (mm)	B (mm)
FLUSH COVER PLATE (SUPPLIED A STANDARD)			
n/a	CUV265	265	90
n/a	CUV340	340	90
OVERLAPPING COVER PLATE			
CUVP265	CUV265	285	100
CUVP340	CUV340	360	100

LIST NUMBER	BOX DIMENSIONS (mm)			
	C	D	E	F
CUV265	265	85	50	200
CUV340	340	85	50	200

Vertical Access Boxes: PVC Ducting

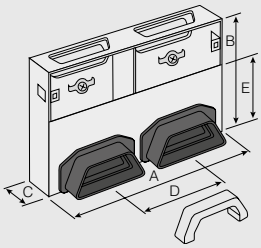

LIST NUMBER	TYPE	DIMENSIONS (mm)				
		A	B	C	D	E
SHALLOW ACCESS						
SF88152	Twin	260	170	50	110	100
SF88153	Triple	370	170	50	110	100
FULL ACCESS						
SF88172	Twin	260	270	50	110	100
SF88173	Triple	370	270	50	110	100

Cover Plates

LIST NUMBER	TYPE	DIMS (mm)		LIST NUMBER	TYPE	DIMS (mm)	
		A	B			A	B
OVERLAPPING SHALLOW ACCESS				FLUSH SHALLOW ACCESS			
SF88180	Twin	280	80	SF88176	Twin	260	70
SF88181	Triple	390	80	SF88177	Triple	370	70
OVERLAPPING FULL ACCESS				FLUSH FULL ACCESS			
SF88188	Twin	280	180	SF88184	Twin	260	170
SF88189	Triple	390	180	SF88185	Triple	370	170

Cablelink Plus Screed Technical

Cablelink Plus Screed System

Load Testing

Load Testing of Floorboxes to BS EN 50085 Part 2-2 (Clauses 10.5.103 and 10.5.104).

The floorboxes have been tested to and comply with the loading requirements of BS EN 50085 Part 2-2 (Cable trunking systems and cable ducting systems for electrical installations Part 2-2: Particular requirements for cable trunking systems and cable ducting systems intended for mounting underfloor, flushfloor, or onfloor).

There are two loading criteria for the floorboxes - one with a point loading to replicate foot traffic for example, and the other, with a large plate to replicate fork trucks and heavier larger loads for example. For both loading criteria the maximum allowable deflection under load is 6mm and the maximum permanent deflection after the load has been removed is 3mm.

The Lid Deflection (loading) graph shows that the maximum point loading classification achieved is 3kN and the maximum large plate loading classification achieved is 5kN.

The Permanent Deflection graph shows the permanent deflection from the test wheel loading at 2kN is 0.3mm and large plate loading at 5kN is 0.4mm. This is well within the maximum allowable deflection of 3.0mm.

Note: This test data specifically refers to the 265 x 265mm sized floorbox frame assembly. The other floorbox sizes also comply with the required test criteria. Declarations of conformity are available on request for the entire range.

Cat 6 Compatibility

With Cat 6 & Cat 6A data cabling the orientation and depth of many data outlets has changed resulting in the need for greater backbox depths and wiring space to accommodate these longer data outlet. No longer is a 35mm wiring space sufficient to ensure data terminations can be made to the manufacturer's recommendations to prevent transmission losses.

45mm wiring space for the Cablelink Plus floorbox system is available. This easily accommodates the longer Cat 6 & Cat 6A data outlets and leaves sufficient space for the data cable to run underneath it.

Lid Deflection – Cablelink Plus 265 x 265mm Frame Assembly

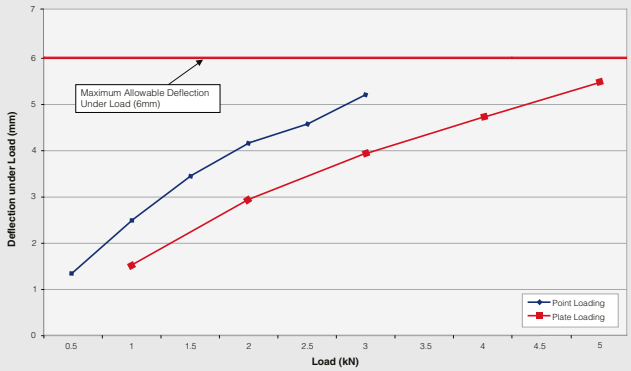

Permanent Deflection After Removal of Load – Cablelink Plus 265 x 265mm Frame

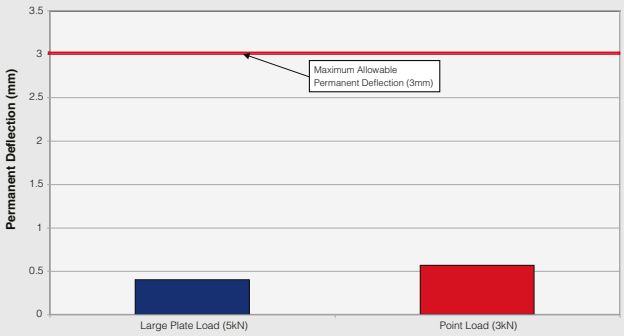

Interact Overhead Technical

Interact Overhead Power

Dimensions

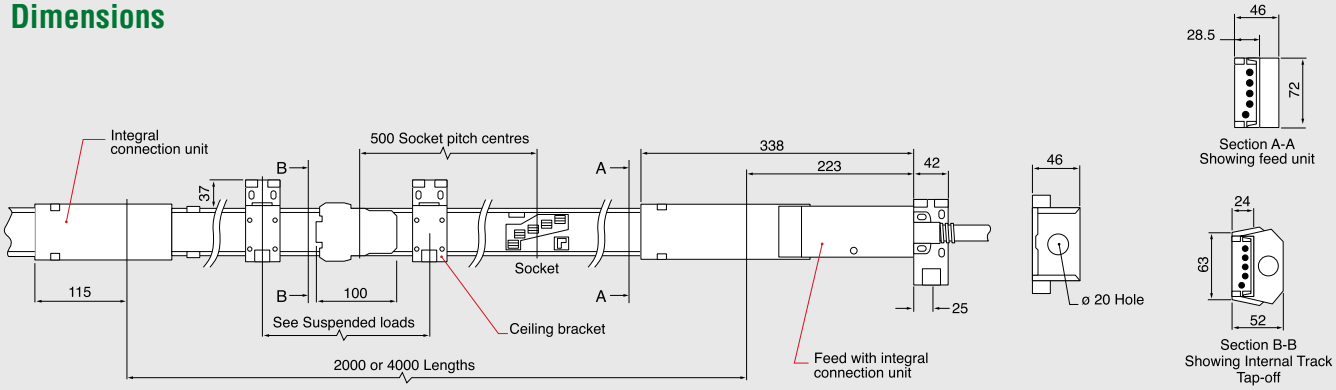

Suspended Loads

The load that can be suspended from the overhead powertrack is dependent on the distance between the supports. Loads should be evenly distributed between hanging brackets. The maximum deflection should not be greater than 1/300.

The spacing between the powertrack ceiling brackets should not exceed 4 metres. The guidelines below should be followed when deciding on the number of ceiling brackets required.

The rods should be of suitable size to carry the combined weight of the track plus the suspended load.

Joints between two lengths of track should be no greater than 500mm from a hanging bracket.

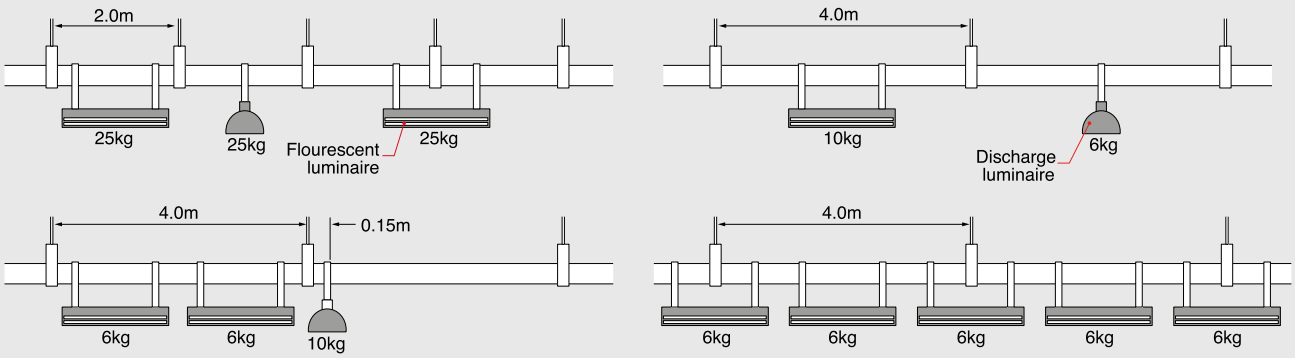

Note: These values are for edge mounted track only. Flat mounted track should not be used for load suspension.

40A POWER TRACK WEIGHT				
LENGTH M	NUMBER OF COPPER CONDUCTORS			
	2+PE	3+PE	4+PE	5+PE (& DUAL GREY)
2	3.1 Kg	3.36 Kg	3.61 Kg	3.87 Kg
4	5.72 Kg	6.22 Kg	6.73 Kg	7.23 Kg

For a full range of corresponding products, see pages 425-429 in the product selector.

Interact Overhead Technical

Interact Overhead Power

Standards and Approvals

Manufactured within ISO 9000 environment.

TECHNICAL SPECIFICATION		
ELECTRICAL CHARACTERISTICS	**OVERHEAD**	
Rated Current	40	A
Rated Voltage	480	V
Frequency	50/60	Hz
Conditional Short Circuit Rating	16	kA
Resistance per Copper Conductor (At ambient temperature 20°C)	1.3	mΩ/m
Impedance per Copper Conductor (At ambient temperature 20°C)	1.3	mΩ/m
VOLT DROPS (FULL LOAD, CONCENTRATED AT ONE END)		
Powertrack (Line + Neutral)	2.9	mV/A/m
Feed Unit	0.3	mV/A
Tap-off Connection	1.6	mV/A
+ 2.5mm² Cable	18	mV/A/m
Joint	0.3	mV/A
Flexible Interlink Unit	0.8	mV/A
+ 6mm² Cable	7.0	mV/A/m
MECHANICAL DATA		
Max. No. of Copper Conductors	5	
Conductor Cross Section Area Nominal	14.4	mm²
Powertrack Casing Copper Equivalent (Where Casing is Protective Earth)	12.0	mm²
Cable Termination Capacity	10	mm²
Tap-off Cable	2.5	mm²
Flexible Interlink Cable	6	mm²
Flexible Interlink Conduit	25	Ømm
Feed Conduit Entry	20	Ømm
IP Rating	2X	

MATERIALS SPECIFICATION	
Powertrack Casing, Feeds and Brackets	Galvanised Steel
Conductors	High Conductivity Copper
Powertrack Insulators	40A Polyamide and Polyester
Sockets/Tap-off Plug/Joint Mouldings	Polycarbonate
Interlink Flexible Conduit	Galvanised Steel
Tap-off Cable	Multi-core Cable to BS 6500 and BS 7211. LSF Cable standard.
TAP-OFF PINS	
– Line, Neutral & Copper Earth	Copper and Phosphorous Bronze, tin plated
– Casing Earth	Brass, tin plated
Flexible Interlink Cable	Tri-Rated to BS 6231

Index

LIST NO.	STD PACK	PAGE
B		
BET1	50	357
BET2	50	357
BMB2WHI	50	352
C		
CA1WHI	10	348
CA2WHI	10	348
CAL22WHI	1	348
CAL23WHI	1	349
CAR22WHI	1	349
CAR23WHI	1	349
CCP53BLK	1	239
CCP133PBLK	1	239
CCP153BLK	1	239
CEA2WHI	50	352
CEP1WHI	10	349
CEP2WHI	10	349
CI1WHI	10	349
CIP1WHI	10	349
CIP2WHI	10	349
CJC1WHI	10	349
CJC2WHI	10	349
CLT1	12m	346
CLT2	12m	346
CLT3	12m	346
CLT4	12m	346
CLT5	6m	346
CLT6	6m	346
CLT7	6m	346
CLT8	3m	346
CLT9	3m	346
CLT50LID	12m	347
CLT75LID	12m	347
CLT100LID	12m	347
CLT150LID	12m	347
CMA1WHI	25	370
CMA3WHI	25	370
CMA4WHI	25	370
CMT1D1WHI	60m	370
CMT1WHI	60m	370
CMT3WHI	60m	370
CMT4WHI	60m	370
CO3WHI	50	359
CO4WHI	50	359
CRB100UK-1GRY*	1	394
CRB100UK-1GRY**	1	385
CRB100UK-70-1GRY**	1	385
CRB265UK-3GRY*	1	385
CRB265UK-70-3GRY*	1	385
CRB340UK-4GRY*	1	385
CRB340UK-70-4GRY*	1	385
CRM321W	1	381
CRM333W	1	381
CRM334	1	381
CRM334W	1	381
CRM336	1	381
CRM336W	1	381
CRM431W	1	381
CRM434	1	381
CRM434W	1	381
CRM444	1	381
CRM444W	1	381
CRM11720	1	379
CRM11730*	1	379
CRM11730CE*	1	379
CRM11730NS*	1	379
CRM11730NSCE	1	379
CRM11731*	1	379
CRM11735*	1	379
CRM11735CE	1	379
CRM11750	1	379
CRM11750CE	1	379
CRM11750NS	1	379
CRM11750NSCE	1	379
CRM11751	1	379
CRM21117	1	380
CRM21201	1	380
CRM21215*	1	380
CRM21301	1	380
CRM21500	1	380
CRM31201	1	380
CRM31501	1	380
CRMB265-3GRY	1	379
CRMB340-4GRY	1	379
CRP100-RCD	1	386, 394
CRP101	1	386, 394
CRP121	1	386, 394
CRP321W	1	386
CRP333	1	386
CRP333W	1	386
CRP334	1	386
CRP334W	1	386
CRP336	1	386
CRP336W	1	386
CRP421W	1	386
CRP434	1	386
CRP434W	1	386
CRP444	1	386
CRP444W	1	386
CRXKEY	2	380, 385
CST1WHI	25	349
CST2WHI	10	349
CT1WHI	30m	348
CT2WHI	12m	348
CUB100UK-1	1	417, 424
CUB100XUK-1	1	417, 424
CUB200UK-2	1	417, 424
CUB200XUK-2	1	417, 424
CUB265UK-3	1	417, 424
CUB265XUK-3	1	417, 424
CUB340UK-4	1	417, 424
CUB340XUK-4	1	417, 424
CUBA-1	1	411, 417
CUBP200-01	1	411, 417, 419, 422, 424
CUBP200-02	1	411, 417, 419, 422, 424

For product codes that contain a * please see the relevant product page for full details.

Index

LIST NO.	STD PACK	PAGE
CUBP200-03	1	411, 417, 419, 422, 424
CUBP200-04	1	411, 417, 419, 422, 424
CUBP200-08	1	411, 417, 419, 422
CUBP265-01	1	411, 417, 419, 422, 424
CUBP265-02	1	411, 417, 419, 422, 424
CUBP265-03	1	411, 417, 419, 422, 424
CUBP265-04	1	411, 417, 419, 422, 424
CUBP265-08	1	411, 417, 419, 422, 424
CUBP340-01	1	411, 417, 419, 422, 424
CUBP340-02	1	411, 417, 419, 422, 424
CUBP340-03	1	411, 417, 419, 422, 424
CUBP340-04	1	411, 417, 419, 422, 424
CUBP340-08	1	411, 417, 419, 422, 424
CUD100-38-1	1	422
CUD225-38-2	1	422
CUD225-38-3	1	422
CUD250-38-3	1	422
CUD275-38-3	1	422
CUD300-38-3	1	422
CUDF100-38	1	422
CUDF225-38	1	422
CUDF250-38	1	422
CUDF275-38	1	422
CUDF300-38	1	422
CUDJ100-38	1	422
CUDJ225-38	1	422
CUDJ250-38	1	422

LIST NO.	STD PACK	PAGE
CUDJ275-38	1	422
CUDJ300-38	1	422
CUFC60-2	10	421
CUFC60-3	10	421
CUJ200UK	1	419, 424
CUJ200XUK	1	419, 424
CUJ265UK	1	424
CUJ265XUK	1	419, 424
CUJ340XUK	1	419
CUJL200-12	1	424
CUJL200-12GRY	1	419
CUJL200-8	1	424
CUJL200-8GRY	1	419
CUJL200X-12	1	424
CUJL200X-12GRY	1	419
CUJL200X-8	1	424
CUJL200X-8GRY	1	419
CUJL265-12	1	424
CUJL265-12GRY	1	419
CUJL265-8	1	424
CUJL265-8GRY	1	419
CUJL265X-12	1	424
CUJL265X-12GRY	1	419
CUJL265X-8	1	424
CUJL265X-8GRY	1	419
CUJL340-12	1	424
CUJL340-12GRY	1	419
CUJL340-8	1	424
CUJL340-8GRY	1	419
CUJL340X-12	1	424
CUJL340X-8	1	424
CUJL340X-8GRY	1	419
CUV265	1	424
CUV265UK-2	1	420
CUV340UK-3	1	420
CUVP265	1	420, 424

LIST NO.	STD PACK	PAGE
CUVP340	1	420
CX-01	10	380
CX-02	5	380, 385
CX-03GRY	10	385
CX-04GRY	1	380
CX-10	10	380, 411
CXL100-8GRY	1	417, 424
CXL200-12GRY	1	417
CXL200-8GRY	1	424
CXL200-8GRY*	1	417
CXL265-12GRY	1	417
CXL265-8GRY	1	424
CXL265-8GRY*	1	417
CXL340-8GRY	1	424
CXL340-8GRY*	1	417
CXL340X-12GRY	1	417
CXP1WHI	10	349
CXP2WHI	10	349
CXP10720	1	385, 423
CXP10730*	1	423
CXP10730NS*	1	385, 411, 423
CXP10731*	1	385, 411, 423
CXP10731NS	1	385
CXP10731NS*	1	411, 423
CXP10735*	1	385, 411, 423
CXP10740	1	385, 411, 423
CXP10745	1	385
CXP10760	1	385, 411, 423
CXP20106	1	423
CXP20107*	1	423
CXP20200	1	394, 411
CXP20201*	1	385, 394, 411, 423
CXP20205	1	385, 394, 411, 423

For product codes that contain a * please see the relevant product page for full details.

Index

LIST NO.	STD PACK	PAGE
CXP20215	1	385, 394, 411, 423
CXP20301	1	385, 394, 411, 423
CXP20500	1	385, 394, 411, 423
CXP30201	1	385, 394, 411, 423
CXP30501	1	385, 394, 411, 423
CXP30502	1	385, 411, 423
CXP30503	1	385, 423
CXPC10730*	1	411, 423
CXPC10730NS*	1	411
CXPC10731*	1	411, 423
CXPC10731NS*	1	411, 423
CXPC10735	1	411, 423
CXPC10745*	1	411, 423
CXPC20201*	1	411, 423
CXPC20215	1	411
CXPC20500	1	411
CXPC30201	1	411, 423
D		
DPC1120	1	400
DPC1130	1	400
DPC1150	1	400
DPC1320	1	400
DPC1330	1	400
DPC1350	1	400
DPC2205	1	400
DPC2210	1	400
DPC3305	1	400
DPC3310	1	400
DPC4405	1	400
DPC4410	1	400
DPC5505	1	400
DPC5510	1	400
DRA10	1	357
DRA20	1	357

LIST NO.	STD PACK	PAGE
E		
EBF2BLK	100	353
EBF3BLK	100	353
ECC2	50	351
ECC3	50	351
ECG2*	100	352
ECG3BLK	50	352
ECL2	100	353
ECL3	100	353
ECL4	50	353
ECL5	25	353
ECL6	25	353
ECR12	10	354
ECR12EL*	10	354
ECT1	1	357
EDC1	25	357
EEB1BLK	5	356
EEC1BLK	25	351
EEC2	100	351
EEC3	50	351
EEC4	10	351
EEC5	10	351
EEC6	10	351
EER3	25	357
EER5	25	357
EER6	25	357
EER7	25	357
EER8	25	357
EER9	25	357
EF1WHI	50m Coil	360
EF2WHI	50m Coil	360
EF3WHI	50m Coil	360
EFA2	100	352
EFA3	50	352
EFA4	25	352

LIST NO.	STD PACK	PAGE
EFA5	25	352
EFA6	10	352
EGF5WHI	10	347
EHL2GRY	100	353
EHL3GRY	100	353
EIB2	25	352
EIB3	25	352
EIE2	25	352
EIT2	25	352
EIT3	25	352
EL1	100	356
EL2	50	356
EL3	50	356
ELS2	1	353
ELS3	1	353
EMA2	100	352
EMA3	50	352
EMA4	25	352
EMA5	25	352
EMA6	10	352
ENB2	25	350
ENB3	10	350
EOC1WHI	150m	359
EOC2WHI	150m	359
EOC3WHI	150m	359
EOC4WHI	150m	359
EOC5WHI	150m	359
EOC6WHI	150m	359
EP2	100	353
EP2S	100	353
EP3	100	353
EP3S	100	353
EQB2	25	353
EQB3	25	353
EQE2	25	352
EQS2	100	351

For product codes that contain a * please see the relevant product page for full details.

Index

LIST NO.	STD PACK	PAGE
EQS3	100	351
EQT2	25	352
EQT3	25	352
ER1	50	353
ER2	50	353
ER5WH	10	353
ES2	100	351
ES3	100	351
ESB1	50	351
ESB2	100	351
ESB3	100	351
ESB4	50	351
ESB5	25	351
ESB6	25	351
ESC1	50	351
ESC2	100	351
ESC3	50	351
ESC4	50	351
ESC5	25	351
ESC6	20	351
ESS2	1	353
ESS3	1	353
ESU8MLWHI	25	358
ESU9MLWHI	25	358
ESU61WHI	25	358
ESU81WHI	25	358
ESU82MLWHI	10	358
ESU92MLWHI	10	358
ESU231WHI	25	365
ESU241WHI	25	358
ESU242WHI	10	358
ESU261WHI	25	358
ESU262WHI	10	358
ESU281WHI	25	358
ESU282WHI	10	358
ESU501RED	5	369

LIST NO.	STD PACK	PAGE
ESU501WHI	5	369
ESU503RED	5	369
ESU503WHI	5	369
ESU2211WHI	25	365
ESU2223WHI	10	365
ESU2311WHI	25	365
ESU2323WHI	10	365
ESU2512WHI	25	365
ESU2523WHI	10	365
ESU2713WHI	10	365
ESU2721WHI	10	365
ESU3511WHI	25	365
ESU3523WHI	10	365
ESU4423WHI	5	365
ESU32125WHI	10	365
ESU32140WHI	10	365
ESU32225WHI	10	365
ESU32240WHI	10	365
ESUUSB17WHI	5	365
ESUUSB19WHI	5	365
ESUUSB22WHI	5	365
ESUUSB53WHI	5	365
EWPLUS	1	357
EXL135BLK	1	237
EXL135WHI	1	237
EXL136BLK	1	237
EXL136WHI	1	237
EXL137BLK	1	237
EXL137WHI	1	237
F		
FAB1WHI	50	360
FAB2WHI	50	360
FAB3WHI	50	360
FAE1*	1	347
FAE2*	1	347
FAE3*	1	347

LIST NO.	STD PACK	PAGE
FAE4*	1	347
FAE5*	1	347
FAE6*	1	347
FAE7*	1	347
FAE8*	1	347
FAE9*	1	347
FAF1	1	347
FAF2	1	347
FAF3	1	347
FAF4	1	347
FAF5	1	347
FAF6	1	347
FAF7	1	347
FAF8	1	347
FAF9	1	347
FAI1*	1	347
FAI2*	1	347
FAI3*	1	347
FAI4*	1	347
FAI5*	1	347
FAI6*	1	347
FAI7*	1	347
FAI8*	1	347
FAI9*	1	347
FC133BLK	10	238
FC133ORG	10	238
FC133WHI	10	238
FC153BLK	10	238
FC4134BLK	1	238
FC4134WHI	1	238
FC4135BLK	1	238
FC4135WHI	1	238
FC4136BLK	1	238
FC4136WHI	1	238
FCT133BLK	10	238
FCT133ORG	10	238

For product codes that contain a * please see the relevant product page for full details.

Index

LIST NO.	STD PACK	PAGE
FCT133WHI	10	238
FTF1	1	346
FTF2	1	346
FTF3	1	346
FTF4	1	346
FTF5	1	346
FTF6	1	346
FTF7	1	346
FTF8	1	346
FTF9	1	346
G		
GR100GRY	1	393
GR200GRY	1	393
GR201GRY	1	393
GR205GRY	1	393
GR500GRY	1	393
GR510GRY	1	393
GR800GRY	1	393
GR850GRY	1	394
GR855GRY	1	394
GR5050GRY	1	393
H		
HIP1	90m	351
HIP2	90m	351
HIP3	90m	351
HIP4	30m	351
HIP5BLK	30m	351
HIP6BLK	30m	351
HLG1WHI	90m	351
HLG2WHI	90m	351
HLG3WHI	90m	351
HLG4WHI	30m	351
HLG5WHI	30m	351
HLG6WHI	30m	351

LIST NO.	STD PACK	PAGE
I		
IFUB61233GRN	1	375
IFUB61233GRY	1	375
IFUB61234RED	1	375
IFUB62433GRN	1	375
IFUB62433GRY	1	375
IFUB62434RED	1	375
IFUB63633GRN	1	375
IFUB63633GRY	1	375
IFUB63634RED	1	375
K100-K999		
K14S42506ABST9	100	222
K14S42506BRST9	100	222
K14S42506DBZT9	100	222
K14S42506LBKT9	100	222
K14S42506LIVT9	100	222
K14S42506NIPT9	100	222
K14S42506PBRT9	100	222
K14S42506TCOT9	100	222
K14S42506WHIT9	100	222
K170BLK	10	49, 128, 166, 233
K170WHI	10	49, 128, 166, 233
K172ALM	5	232
K172BRC	1	184
K172BSS	5	184
K172PCR	5	184
K172SAG	1	184
K172WHI	10	49
K180BLK	10	96, 126, 164
K180SBP	10	96
K180SCW	10	96
K180SNS	10	96
K180WHI	10	49, 126, 164, 232
K181ALM	5	230
K181BRC	1	184

LIST NO.	STD PACK	PAGE
K181BSS	5	184
K181PCR	5	184
K181SAG	1	184
K181WHI	10	46
K182ALM	5	230
K182BRC	1	184
K182BSS	5	184
K182GRA	10	46
K182PCR	5	184
K182SAG	1	184
K182WHI	10	46
K184ALM	1	230
K184BRC	1	184
K184BSS	5	184
K184GRA	10	46
K184PCR	5	184
K184SAG	1	184
K184WHI	10	46
K185WHI	10	46
K186BLK	10	49, 126, 164, 232
K186WHI	10	49, 126, 164, 232
K188BLK	10	49, 96, 126, 164, 232
K188SBP	10	96
K188SCW	10	96
K188SNS	10	96
K188WHI	10	49, 126, 164, 232
K330GRA	10	40
K330WHI	10	40
K337KOWHI	10	40
K337WHI	10	40
K370D1WHI	10	40
K370GRA	10	40
K370WHI	10	40
K377WHI	10	40

For product codes that contain a * please see the relevant product page for full details.

Index

LIST NO.	STD PACK	PAGE
K385WHI	1	40
K422WHI	10	50
K427WHI	10	50
K600	10	222
K601	10	222
K602	10	222
K603	10	222
K604	10	222
K605	10	222
K606	10	222
K607	10	222
K608	10	222
K609	10	222
K610	10	222
K612	10	222
K630	10	222
K700WHI	1	39
K701WHI	1	39
K703BSS	1	178
K706WHI	1	39
K732BRC	1	172
K732BSS	5	172
K733BRC	1	172
K733BSS	5	172
K770WHI	10	38
K771WHI	10	38
K772WHI	10	38
K780WHI	10	38
K781RED	5	38
K781WHI	5	38
K829ALM	5	214, 234
K830ALM	5	214, 234
K841ALM	5	227
K842ALM	5	227
K843ALM	5	227
K848ALM	5	227

LIST NO.	STD PACK	PAGE
K850ALM	5	227
K863	5	211, 217
K897ALM	10	214, 234
K897WHI	5	234
K899ALM	10	214, 234
K899WHI	10	234
K931BRC	1	174
K931BSS	5	174
K931PCR	1	174
K932ALM	5	229
K941BRC	1	174
K941BSS	1	174
K941KOBSS	1	175
K941PCR	1	174
K941SAG	1	174
K942D5ALM	5	228
K948BRC	1	176
K948BSS	5	176
K948PCR	1	176
K948SAG	1	176
K954ALM	5	229
K958BRC	1	176
K958BSS	1	176
K961BRC	1	175
K961BSS	1	175
K961D6BRC	1	175
K961D6BSS	1	175
K961D6SAG	1	175
K961PCR	1	175
K961SAG	1	175
K962D6ALM	1	228
K963KOALM	1	228
K971BRC	1	175
K971BSS	1	175
K971BSS	5	175
K971D6BRC	5	175

LIST NO.	STD PACK	PAGE
K971D6BSS	5	175
K971PCR	1	175
K971SAG	1	175
K972ALM	5	229
K972D6ALM	1	229
K978BRC	1	176
K978BSS	1	176
K978PCR	1	176
K978SAG	1	176
K983ALM	5	229
K986ALM	5	229
K989ALM	5	229
K1000-9999		
K1000WHI	1	34
K1030WHI	10	40
K1040KOWHI	10	40
K1040WHI	10	40
K1060D1WHI	10	40
K1060WHI	10	40
K1070D1WHI	10	40
K1070WHI	10	40
K1090WHI	10	46
K1161WHI	10	55
K1163WHI	10	55
K1170WHI	10	55
K1171WHI	10	55
K1172WHI	10	56
K1180WHI	10	55
K1181WHI	10	55
K1186WHI	10	56
K1189WHI	10	56
K1246D1RED	5	37
K1246D1WHI	5	37
K1246WHI	5	37
K1247ALM	5	227
K1247D6ALM	1	227

For product codes that contain a * please see the relevant product page for full details.

Index

LIST NO.	STD PACK	PAGE
K1248ALM	1	227
K1248D6ALM	1	227
K1257D1WHI	10	37
K1257WHI	10	37
K1258BRC	1	171
K1258BSS	5	171
K1259BRC	1	171
K1259BSS	5	171
K1400	1	210
K1401M	1	210
K1401S	1	210
K1402M	1	210
K1402S	1	210
K1501WHILV	1	45
K1511WHI	1	45
K1521WHILV	1	45
K1522WHILV	1	45
K1523WHILV	1	45
K1524WHILV	1	45
K1531WHI	1	45
K1532BRC	1	180
K1532BRCLV	1	181
K1532BSS	1	180
K1532BSSLV	1	181
K1532PCR	1	180
K1532PCRLV	1	181
K1532SAG	1	180
K1532SAGLV	1	181
K1532WHI	1	45
K1533BRC	1	180
K1533BSS	1	180
K1533PCR	1	180
K1533SAG	1	180
K1533WHI	1	45
K1534BRC	1	180
K1534BSS	1	180

LIST NO.	STD PACK	PAGE
K1534PCR	1	180
K1534SAG	1	180
K1534WHI	1	45
K1535WHI	1	45
K1536BRCLV	1	181
K1536BSSLV	1	181
K1536PCRLV	1	181
K1536SAGLV	1	181
K1541WHI	1	45
K1551BRC	1	180
K1551BRCLV	1	181
K1551BSS	1	180
K1551BSSLV	1	181
K1551PCR	1	180
K1551PCRLV	1	181
K1551SAG	1	180
K1551SAGLV	1	181
K1552BRC	1	180
K1552BRCLV	1	181
K1552BSS	1	180
K1552BSSLV	1	181
K1552PCR	1	180
K1552PCRLV	1	181
K1552SAG	1	180
K1552SAGLV	1	181
K1561WHI	1	45
K1631WHI	1	45
K1641WHI	1	45
K1661WHI	1	45
K1800WHI	1	36, 171
K1800WHI	5	36, 171
K1816WHI	1	36
K1826WHI	1	36
K1903WHI	3m	324
K1904CHA	1	325
K1904WHI	1	325

LIST NO.	STD PACK	PAGE
K1905WHI	1	325
K1906WHI	1	325
K1908WHI	5	324
K1911WHI*	1	325
K1912WHI*	1	325
K1925WHI	10	330
K1926WHI	10	327
K1932WHI	15m	327
K1935WHI	15m	327
K1936WHI	15m	327
K1944WHI	1	325
K1945WHI	5	324
K1949WHI	1	327
K1957WHI*	1	326
K1958WHI*	1	326
K1962WHI	3m	324
K1963WHI	3m	324
K1972WHI	1	326
K1973WHI	1	326
K1992WHI	1	326
K1992WHI*	1	326
K2000	1	39-40
K2025WHI	5	216
K2031WHI	10	216
K2051WHI	10	54
K2056WHI	5	54
K2061WHI	5	216
K2062WHI	5	216
K2131WHI	5	216
K2132WHI	5	216
K2133WHI	10	216
K2134WHI	10	216
K2140WHI	10	215, 206
K2142WHI	5	215, 206
K2151WHI	10	61, 215
K2152WHI	5	215

For product codes that contain a * please see the relevant product page for full details.

Index

LIST NO.	STD PACK	PAGE
K2153WHI	10	215
K2158BRC	1	173
K2158BSS	1	173
K2160WHI	10	61, 215
K2161WHI	5	215
K2172WHI	5	216
K2181WHI	10	215, 206
K2183WHI	5	206, 215
K2183WHI	10	206
K2185WHI	5	215
K2200	10	214
K2202	5	214
K2211ALM	5	206, 211, 217
K2212ALM	5	206, 211, 217
K2213ALM	5	206, 211, 217
K2214ALM	5	206, 211, 217
K2240BRC	1	178
K2240BSS	1	178
K2251WHI	10	38
K2252WHI	5	38
K2271ALM	5	228
K2272ALM	5	228
K2435ALM	1	226
K2446ALM	5	226
K2446D6ALM	1	226
K2448BRC	1	170
K2448BSS	5	170
K2448PCR	1	170
K2448SAG	1	170
K2458BRC	1	169
K2458BSS	5	169
K2458PCR	1	169
K2458SAG	1	169
K2476CEWHI	10	35
K2476D1RED	10	35

LIST NO.	STD PACK	PAGE
K2476D1WHI	10	35
K2476GRA	10	35
K2476WHI	10	35
K2477ALM	5	226
K2477D6ALM	1	226
K2493WHI	10	37
K2647WHI	5	34
K2657D1RED	5	34
K2657GRA	10	34
K2657WHI	10	34
K2737WHI	5	34
K2740WHI	1	37, 212
K2741WHI	1	37, 212
K2746CED1RED	10	35
K2746CEWHI	10	35
K2746D1RED	10	35
K2746D1WHI	10	35
K2746D2WHI	10	35
K2746GRA	10	35
K2746WHI	10	35
K2747D1RED	5	34
K2747D1WHI	5	34
K2747WHI	50	34
K2757D1RED	5	34
K2757D1WHI	10	34
K2757GRA	10	34
K2757WHI	10	34
K2826BRC	1	171
K2826BSS	1	171
K2857ALM	1	230
K2859ALM	1	230
K2871ALM	1	227
K2873ALM	5	227
K2881BRC	1	171
K2881BSS	5	171
K2881PCR	5	171

LIST NO.	STD PACK	PAGE
K2881SAG	1	171
K2883BRC	1	172
K2883BSS	5	172
K2883PCR	5	172
K2883SAG	1	172
K2891WHI	10	37
K2893WHI	10	37
K2943BRC	1	170
K2943BSS	1	170
K2943D5ALM	1	226
K2943D5WHI	1	226
K2943PCR	1	170
K2945ALM	5	226
K2946ALM	5	226
K2946D5ALM	1	226
K2946D6ALM	1	226
K2947BRC	1	170
K2947BSS	5	170
K2947CEBLU	5	173
K2947CEBRC	1	171
K2947CEBSS	5	171
K2947D6BRC	1	170
K2947D6BSS	5	170
K2947PCR	1	170
K2947SAG	1	170
K2948BRC	1	169
K2948BSS	5	169
K2948D6BRC	1	169
K2948D6BSS	5	169
K2948PCR	1	169
K2948SAG	1	169
K2949BRC	1	173
K2949BSS	1	173
K2958BLU	1	173
K2958BRC	1	169
K2958BSS	10	169

For product codes that contain a * please see the relevant product page for full details.

Index

LIST NO.	STD PACK	PAGE
K2958PCR	1	169
K2958SAG	1	169
K2977ALM	5	226
K2977D5ALM	1	226
K2977D6ALM	1	226
K3012WHI	10	230
K3041	5	43
K3042WHI	1	228
K3042WHI	10	228
K3045WHI	5	226
K3046WHI	5	226
K3054WHI	10	229
K3062WHI	10	228
K3072WHI	10	229
K3077WHI	10	226
K3086WHI	10	229
K3091WHI	10	229
K3092WHI	10	229
K3131WHI	5	54
K3182WHI	1	231
K3184WHI	1	231
K3191D1WHI	5	54
K3191WHI	5	54
K3192D1WHI	5	54
K3192WHI	5	54
K3212WHI	10	59
K3220WHI	10	59
K3230WHI	10	59
K3232WHI	10	59
K3233WHI	5	59
K3240WHI	10	59
K3242LSF	10	59
K3242WHI	10	59
K3243LSF	5	59
K3243WHI	5	59
K3329BRC	1	182

LIST NO.	STD PACK	PAGE
K3329BSS	5	182
K3329PCR	1	182
K3329SAG	1	182
K3330BRC	1	182
K3330BSS	10	182
K3330PCR	1	182
K3330SAG	1	182
K3369ALM	5	214, 234
K3369WHI	5	234
K3390ALM	5	214, 234
K3390WHI	5	234
K3431BRC	1	186
K3431BSS	10	186
K3431PCR	1	186
K3431SAG	1	186
K3432BRC	1	186
K3432BSS	10	186
K3432PCR	1	186
K3432SAG	1	186
K3433BRC	1	186
K3433BSS	5	186
K3433PCR	1	186
K3433SAG	1	186
K3434BRC	1	187
K3434BSS	5	187
K3434PCR	1	187
K3434SAG	1	187
K3436BRC	1	187
K3436BSS	1	187
K3436PCR	1	187
K3436SAG	1	187
K3438BRC	1	187
K3438BSS	1	187
K3438PCR	1	187
K3438SAG	1	187
K3439BRC	1	188

LIST NO.	STD PACK	PAGE
K3439BSS	1	188
K3439PCR	1	188
K3439SAG	1	188
K3442BRC	1	188
K3442BSS	1	188
K3442PCR	1	188
K3442SAG	1	188
K3448BRC	1	188
K3448BSS	1	188
K3448PCR	1	188
K3448SAG	1	188
K3454BRC	1	188
K3454BSS	1	188
K3454PCR	1	188
K3454SAG	1	188
K3491ALM	10	206, 234
K3491WHI	10	234
K3492ALM	10	206, 234
K3492WHI	10	234
K3493ALM	5	206, 234
K3493WHI	5	234
K3494ALM	5	206, 234
K3494WHI	5	234
K3496ALM	1	206, 234
K3498ALM	1	207, 234
K3499ALM	1	207, 234
K3502ALM	1	207, 234
K3508ALM	1	207, 234
K3514ALM	1	207, 234
K3520WHI	10	52
K3521WHI	10	52
K3522WHI	10	52
K3523WHI	10	52
K3525D1WHI	10	52
K3525WHI	10	52
K3540WHI	10	50

For product codes that contain a * please see the relevant product page for full details.

Index

LIST NO.	STD PACK	PAGE
K3550WHI	1	50
K3551WHI	5	50
K3552DABWHI	1	50
K3552WHI	5	50
K3553DABWHI	1	50
K3553WHI	5	50
K3554DABWHI	1	50
K3555WHI	1	50
K3557WHI	1	51
K3560DABWHI	1	51
K3561DABWHI	1	51
K3561WHI	5	51
K3562WHI	5	51
K3563DABWHI	1	51
K3563WHI	5	51
K3564DABWHI	1	51
K3565DABWHI	1	51
K3566DABWHI	1	51
K3580BRC	1	182
K3580BSS	5	182
K3580PCR	1	182
K3580SAG	1	182
K3581BRC	1	182
K3581BSS	5	182
K3581PCR	1	182
K3581SAG	1	182
K3582BRC	1	182
K3582BSS	5	182
K3582PCR	1	182
K3582SAG	1	182
K3585BRC	1	183
K3585BSS	1	183
K3585PCR	1	183
K3585SAG	1	183
K3591ALM	5	229
K3592ALM	5	229

LIST NO.	STD PACK	PAGE
K3593ALM	5	229
K3631GRA	10	52, 206
K3631WHI	10	52, 206
K3632GRA	10	52
K3632WHI	10	52, 206
K3633GRA	10	52, 206
K3633WHI	10	52, 206
K3633WHI/GRA	10	206
K3634GRA	10	52, 206
K3634WHI	10	52, 206
K3636GRA	1	52, 206
K3636WHI	1	52, 206
K3638GRA	1	52
K3638WHI	1	52, 207
K3639WHI	1	52, 207
K3701	10	206
K3702	10	206
K3703	10	206-7
K3704	10	206-7
K3706	10	207
K3708ZIC	10	207
K3716	100	221, 316, 337, 343
K3781ALM	5	230
K3782ALM	5	230
K3786ALM	1	28, 235
K3786WHI	1	28, 235
K3787ALM	1	28, 235
K3787WHI	1	28, 235
K3825WHI	10	46
K3827WHI	10	46
K3828WHI	10	46
K4000WHI	10	119, 157, 205
K4001WHI	10	119, 157, 205
K4030	1	66
K4031	1	66

LIST NO.	STD PACK	PAGE
K4047	1	65
K4058	1	66
K4098	1	66
K4150WHI	10	39
K4152WHI	5	39
K4204	1	62
K4206	1	62
K4208	1	62
K4210	1	62
K4214WHI	10	60
K4220WHI	10	60
K4230WHI	10	60
K4232WHR	10	60
K4233WHR	5	60
K4240WHR	10	60
K4242LSF	10	60
K4242WHR	10	60
K4243LSF	5	60
K4243WHR	5	60
K4499ABSB	1	118, 156
K4499BLK	1	204
K4499BRC*	1	118, 156
K4499BSS*	1	118, 156
K4499DBZB	1	118, 156
K4499LBKB	1	118, 156
K4499LBS*	1	118, 156
K4499LIVW	1	118, 156
K4499PBR*	1	118, 156
K4499POC*	1	118, 156
K4499SAG*	1	118, 156
K4499TCOB	1	118, 156
K4499TIRB*	1	118, 156
K4499WHI	1	118, 156, 204
K4500BLKLV	1	204
K4500BRCLV*	1	118, 156

For product codes that contain a * please see the relevant product page for full details.

Index

LIST NO.	STD PACK	PAGE
K4500BSSLV*	1	118, 156
K4500DBZBLV	1	118, 156
K4500LBKBL	1	118, 156
K4500LBSLV*	1	118, 156
K4500LIVWL	1	118, 156
K4500PBRLV*	1	118, 156
K4500POCLV*	1	118, 156
K4500SAGLV*	1	118, 156
K4500TIRBLLV*	1	118, 156
K4500WHILV	1	204
K4500WHIWL	1	118, 156
K4501BLKLV	1	204
K4501BRCLV*	1	118, 156
K4501BSSLV*	1	118, 156
K4501DBZBLV	1	118, 156
K4501LBKBL	1	118, 156
K4501LBSLV*	1	118, 156
K4501LIVWL	1	118, 156
K4501PBRLV*	1	118, 156
K4501POCLV*	1	118, 156
K4501SAGLV*	1	118, 156
K4501TCOBLV	1	118, 156
K4501TIRBLLV*	1	118, 156
K4501WHILV	1	204
K4501WHIWL	1	118, 156
K4511ABSBLV	1	118, 156
K4511BLKLV	1	204
K4511BRCLV*	1	118, 156
K4511BSSLV*	1	118, 156
K4511DBZBLV	1	118, 156
K4511LBKBL	1	118, 156
K4511LBSLV*	1	118, 156
K4511LIVWL	1	118, 156
K4511PBRLV*	1	118, 156
K4511POCLV*	1	118, 156
K4511SAGLV*	1	118, 156

LIST NO.	STD PACK	PAGE
K4511TCOBLV	1	118, 156
K4511TIRBLLV*	1	118, 156
K4511WHILV	1	204
K5411WHIW	1	118, 156
K4520BLK	10	205
K4520WHI	10	119, 157, 205
K4521BLK	10	119, 157, 205
K4521WHI	10	119, 157, 205
K4671BRC	1	178
K4671BSS	5	178
K4671PCR	1	178
K4671SAG	1	178
K4672BRC	1	179
K4672BSS	1	179
K4672PCR	1	179
K4672SAG	1	179
K4673BRC	1	179
K4673BSS	5	179
K4673PCR	1	179
K4673SAG	1	179
K4710P	1	31
K4761BRC	1	179
K4761BSS	5	179
K4761PCR	1	179
K4761SAG	1	179
K4762BRC	1	179
K4762BSS	5	179
K4762PCR	1	179
K4762SAG	1	179
K4766BRC	1	27
K4766BSS	1	27
K4766PCR	1	27
K4766SAG	1	27
K4767BRC	1	27
K4767BSS	1	27

LIST NO.	STD PACK	PAGE
K4767PCR	1	27
K4767SAG	1	27
K4780WHI	1	44
K4781GRA	10	44
K4781WHI	10	44
K4782GRA	10	44
K4782WHI	10	44
K4783WHI	10	44
K4785GRA	10	44
K4785WHI	10	44
K4786GRA	1	26
K4786WHI	1	26
K4787WHI	10	44
K4788WHI	10	44
K4789GRA	1	26
K4789WHI	1	26
K4817WHI	10	50
K4836AMB	10	117, 155, 203
K4836GRN	10	117, 155, 204
K4836RED	10	117, 155, 203
K4841WHI	5	44
K4842WHI	5	44
K4848BWHI	5	44
K4848PWHI	5	44
K4857WHI	1	39
K4858	10	39, 179, 230
K4859WHI	10	39
K4860BRC	1	179
K4860BSS	1	179
K4860PCR	1	179
K4860SAG	1	179
K4867WHI	10	44
K4868WHI	10	44
K4870D2WHI	10	43
K4870GRA	10	43

For product codes that contain a * please see the relevant product page for full details.

Index

LIST NO.	STD PACK	PAGE
K4870WHI	10	43
K4871D2WHI	10	43
K4871GRA	10	43
K4871WHI	10	43
K4872D2WHI	10	43
K4872GRA	10	43
K4872WHI	10	43
K4873D2WHI	10	43
K4873WHI	10	43
K4874D2WHI	5	43
K4874WHI	5	43
K4875D2WHI	10	43
K4875WHI	10	43
K4876WHI	10	43
K4878BWHI	10	43
K4878PWHI	10	43
K4879WHI	5	43
K4880ABSB	1	110, 148
K4880BLK	10	190
K4880BRC*	1	110, 148
K4880BSS*	1	110, 148
K4880DBZB	1	110, 148
K4880GRA	10	190
K4880LBKB	1	110, 148
K4880LBS*	1	110, 148
K4880LIVW	1	110, 148
K4880PBR	1	110, 148
K4880POC*	1	110, 148
K4880SAG*	1	110, 148
K4880TCOB	1	110, 148
K4880TIRB	1	110, 148
K4880WHI	10	110, 148, 190
K4881ABSB	1	110, 149
K4881BLK	10	190
K4881BRC*	1	110, 149
K4881BSS*	1	110, 149

LIST NO.	STD PACK	PAGE
K4881DBZB	1	110, 149
K4881GRA	10	190
K4881LBKB	1	110, 149
K4881LBS*	1	110, 149
K4881LIVW	1	110, 149
K4881PBR	1	110, 149
K4881POC*	1	110, 149
K4881SAG*	1	110, 149
K4881TCOB	1	110, 149
K4881TIRB	1	110, 149
K4881WHI	10	110, 149, 190
K4882ABSB	1	110, 149
K4882BLK	1	190
K4882BRC*	1	110, 149
K4882BSS*	1	110, 149
K4882DBZB	1	110, 149
K4882GRA	10	190
K4882LBKB	1	110, 149
K4882LBS*	1	110, 149
K4882LIVW	1	110, 149
K4882PBR	1	110, 149
K4882POC*	1	110, 149
K4882SAG*	1	110, 149
K4882TCOB	1	110, 149
K4882TIRB	1	110, 149
K4882WHI	10	110, 149, 190
K4885BBLK	1	191
K4885BLK	10	190
K4885BRC*	1	111, 149
K4885BSS*	1	111, 149
K4885BWHI	1	111, 149, 191
K4885DBZB	1	111, 149
K4885LBKB	1	111, 149
K4885LBS*	1	111, 149
K4885LIVW	1	111, 149

LIST NO.	STD PACK	PAGE
K4885PBLK	1	112, 150, 191
K4885PBR*	1	111, 149
K4885POC*	1	111, 149
K4885PWHI	10	112, 150, 191
K4885RED	1	111, 149, 190
K4885REDB	1	111, 149, 190
K4885SAG*	1	111, 149
K4885TCOB	1	111, 149
K4885TIRB	1	111, 149
K4885WHI	10	111, 149, 190
K4886BLK	10	119, 157, 205
K4886WHI	10	119, 157, 205
K4889AMB	10	117, 155, 203
K4889GRN	10	117, 155, 203
K4889RED	10	117, 155, 203
K4889REDB	1	117, 155, 203
K4890BLK	10	120, 158, 205
K4890KOBLK	10	120, 158, 205
K4890KOWHI	10	120, 158, 205
K4890WHI	10	120, 158, 205
K4891ABSB	1	112, 150
K4891BLK	10	191
K4891BRC*	1	112, 150
K4891BSS*	1	112, 150
K4891DBZB	1	112, 150
K4891GRA	10	191
K4891LBKB	1	112, 150
K4891LBS*	1	112, 150
K4891LIVW	1	112, 150
K4891PBR*	1	112, 150
K4891POC*	1	112, 150
K4891SAG*	1	112, 150

For product codes that contain a * please see the relevant product page for full details.

Index

LIST NO.	STD PACK	PAGE
K4891TCOB	1	112, 150
K4891TIRB	1	112, 150
K4891WHI	10	112, 150, 191
K4892ABSB	1	113, 151
K4892BLK	10	192
K4892BRC*	1	113, 151
K4892BSS*	1	113, 151
K4892DBZB	1	113, 151
K4892LBKB	1	113, 151
K4892LBLK	1	113, 151, 192
K4892LBS*	1	113, 151
K4892LIVW	1	113, 151
K4892LWHI	10	113, 151, 192
K4892PBR*	1	113, 151
K4892POC*	1	113, 151
K4892RED	10	113, 151, 192
K4892REDB	1	192
K4892REDB	10	113, 151, 192
K4892SAG*	1	113, 151
K4892TCOB	1	113, 151
K4892TIRB	1	113, 151
K4892WHI	10	113, 151, 192
K4893ABSB	1	114, 152
K4893BLK	10	193
K4893BRC*	1	114, 152
K4893BSS*	1	114, 152
K4893DBZB	1	114, 152
K4893LBKB	1	114, 152
K4893LBS*	1	114, 152
K4893LIVW	1	114, 152
K4893PBR*	1	114, 152
K4893POC*	1	114, 152
K4893RED	10	114, 152, 193
K4893REDB	10	114, 152, 193

LIST NO.	STD PACK	PAGE
K4893SAG*	1	114, 152
K4893TCOB	1	114, 152
K4893TIRB	1	114, 152
K4893WHI	1	114, 152, 193
K4894BLK	1	116, 154, 202
K4894WHI	10	116, 154, 202
K4896ABSB	1	114, 152
K4896BLK	10	193
K4896BRBLK	1	194
K4896BRC*	1	114, 152
K4896BRWHI	1	194
K4896BSS*	1	114, 152
K4896CHBLK	1	195
K4896CHWHI	1	195
K4896CMBLK	1	201
K4896CMWHI	1	201
K4896DBZB	1	114, 152
K4896DWBLK	1	194
K4896DWWHI	1	194
K4896FFBLK	1	196
K4896FFWHI	1	196
K4896FGBLK	1	195
K4896FGWHI	1	195
K4896FNBLK	1	195
K4896FNWHI	1	195
K4896FZBLK	1	196
K4896FZWHI	1	196
K4896GRA	10	193
K4896HBBLK	1	199
K4896HBWHI	1	199
K4896HRBLK	1	198
K4896HRWHI	1	198
K4896IHBLK	1	199
K4896IHWHI	1	199
K4896LBKB	1	114, 152

LIST NO.	STD PACK	PAGE
K4896LBS*	1	114, 152
K4896LIVW	1	114, 152
K4896MWBLK	1	198
K4896MWWHI	1	198
K4896NBLK	1	114, 152, 193
K4896NBRBL	1	194
K4896NBRBLK	1	194
K4896NBRWH	1	194
K4896NBRWHI	1	194
K4896NCHBL	1	195
K4896NCHBLK	1	195
K4896NCHWH	1	195
K4896NCHWHI	1	195
K4896NCMBL	1	201
K4896NCMBLK	1	201
K4896NCMWH	1	201
K4896NCMWHI	1	201
K4896NDWBL	1	194
K4896NDWBLK	1	194
K4896NDWWH	1	194
K4896NDWWHI	1	194
K4896NFFBL	1	196
K4896NFFBLK	1	196
K4896NFFWH	1	196
K4896NFFWHI	1	196
K4896NFGBL	1	196
K4896NFGBLK	1	196
K4896NFGWH	1	196
K4896NFGWHI	1	196
K4896NFNBL	1	195
K4896NFNBLK	1	195
K4896NFNWH	1	195
K4896NFNWHI	1	195
K4896NFZBL	1	196
K4896NFZBLK	1	196
K4896NFZWHI	1	196

For product codes that contain a * please see the relevant product page for full details.

Index

LIST NO.	STD PACK	PAGE
K4896NGRA	1	193
K4896NHBBL	1	199
K4896NHBBLK	1	199
K4896NHBWH	1	199
K4896NHBWHI	1	199
K4896NHRBL	1	199
K4896NHRBLK	1	199
K4896NHRWH	1	199
K4896NHRWHI	1	199
K4896NIHWH	1	200
K4896NIHWHI	1	200
K4896NMWBL	1	198
K4896NMWBLK	1	198
K4896NMWWH	1	198
K4896NMWWHI	1	198
K4896NOVBL	1	199
K4896NOVBLK	1	199
K4896NOVWH	1	199
K4896NOVWHI	1	199
K4896NPHWH	1	200
K4896NPHWHI	1	200
K4896NTDBL	1	197
K4896NTDBLK	1	197
K4896NTDWH	1	197
K4896NTDWHI	1	197
K4896NWCBL	1	201
K4896NWCBLK	1	201
K4896NWCWH	1	201
K4896NWCWHI	1	201
K4896NWDAWHI	1	201
K4896NWDABLK	1	201
K4896NWDAWHI	1	201
K4896NWDABLK	1	201
K4896NWDWHI	1	197
K4896NWDBLK	1	197
K4896NWDRWHI	1	198

LIST NO.	STD PACK	PAGE
K4896NWDRBLK	1	198
K4896NWHI	1	114, 152, 193
K4896NWLBLK	1	200
K4896NWLWHI	1	200
K4896NWMBLK	1	197
K4896NWMWHI	1	197
K4896OVBLK	1	199
K4896OVWHI	1	199
K4896PBR*	1	114, 152
K4896PHBLK	1	200
K4896PHWHI	1	200
K4896POC*	1	114, 152
K4896RED	10	115, 153, 194
K4896REDB	1	194
K4896REDB	10	115, 153, 194
K4896SAG*	1	114, 152
K4896TCOB	1	114, 152
K4896TDBLK	1	197
K4896TDWHI	1	197
K4896TIRB	1	114, 152
K4896WBLK	10	115, 119, 153, 157, 193
K4896WCBLK	1	201
K4896WCWHI	1	201
K4896WDABLK	1	201
K4896WDAWHI	1	201
K4896WDBLK	1	197
K4896WDRBLK	1	198
K4896WDRWHI	1	198
K4896WDWHI	1	197
K4896WHI	1	114, 152, 193
K4896WLBLK	1	200
K4896WLWHI	1	200
K4896WMBLK	1	197
K4896WMWHI	1	197

LIST NO.	STD PACK	PAGE
K4896WWHI	10	115, 153, 193
K4898BLK	1	116, 154, 202
K4898ELBLK	1	116, 154, 202
K4898ELWHI	10	116, 154, 202
K4898WHI	10	116, 154, 202
K4899ABSB	1	113, 151
K4899BLK	10	192
K4899BRC*	1	113, 151
K4899BSS*	1	113, 151
K4899DBZB	1	113, 151
K4899LBKB	1	113, 151
K4899LBS*	1	113, 151
K4899LIVW	1	113, 151
K4899PBR*	1	113, 151
K4899POC*	1	113, 151
K4899RED	10	114, 152, 193
K4899REDB	1	193
K4899REDB	10	114, 152, 193
K4899SAG*	1	113, 151
K4899TCOB	1	113, 151
K4899TIRB	1	113, 151
K4899WHI	10	113, 151, 192
K4900ABSB	1	112, 150
K4900BLK	10	191
K4900BRC*	1	112, 150
K4900BSS*	1	112, 150
K4900LBKB	1	112, 150
K4900LBS*	1	112, 150
K4900LIVW	10	112, 150
K4900PBR*	1	112, 150
K4900POC*	1	112, 150
K4900SAG*	1	112, 150
K4900TCOB	1	112, 150

For product codes that contain a * please see the relevant product page for full details.

Index

LIST NO.	STD PACK	PAGE
K4900TIRB	1	112, 150
K4900WHI	10	112, 150, 191
K4910ABSB	1	112, 150
K4910BLK	10	191
K4910BRC*	1	112, 150
K4910BSS*	1	112, 150
K4910LBKB	1	112, 150
K4910LBS*	1	112, 150
K4910LIVW	1	112, 150
K4910PBR*	1	112, 150
K4910POC*	1	112, 150
K4910RED	10	191
K4910REDB	1	112, 150, 191
K4910SAG*	1	112, 150
K4910TIRB	1	112, 150
K4910WHI	10	112, 150, 191
K4915BLK	10	113, 151, 192
K4915RED	10	113, 151, 192
K4915REDB	1	113, 151, 192
K4915WHI	10	113, 151, 192
K4917BLK	1	116, 154, 202
K4917ELWHI	10	116, 154, 202
K4917WHI	10	116, 154, 202
K4918BLK	10	116, 154, 203
K4918WHI	10	116, 154, 203
K4981ABSB	1	110, 149
K4981BLK	10	190
K4981BRC*	1	110, 149
K4981BSS*	1	110, 149
K4981DBZB	1	110, 149
K4981LBKB	1	110, 149
K4981LBS*	1	110, 149
K4981LIVW	1	110, 149

LIST NO.	STD PACK	PAGE
K4981PBR	1	110, 149
K4981POC*	1	110, 149
K4981SAG*	1	110, 149
K4981TCOB	1	110, 149
K4981TIRB	1	110, 149
K4981WHI	10	110, 149, 190
K5001WHI	1	42
K5011WHI	1	42
K5012WHI	1	41
K5015	1	65
K5016	1	65
K5017	1	65
K5030F	1	65
K5030SM	1	65
K5033WHI	1	46
K5040F	1	65
K5040SM	1	65
K5040WHI	1	42
K5041WHI	1	42
K5045WHI	10	42
K5060WHI	1	42
K5061WHI	1	42
K5105GRA	1	41
K5105WHI	1	41
K5106BRC	1	177
K5106BSS	1	177
K5106PCR	1	177
K5106SAG	1	177
K5114BRC	1	178
K5114BSS	1	178
K5114PCR	1	178
K5114SAG	1	178
K5116ALM	1	230
K5205WHI	1	41
K5207WHI	10	41
K5208WHI	10	41

LIST NO.	STD PACK	PAGE
K5212ALM	5	230
K5213BRC	1	177
K5213BSS	1	177
K5215CKWHI	1	41
K5215SHWHI	1	41
K5215WHI	1	41
K5230ALM	1	230
K5230WHI	1	41
K5232ALM	1	230
K5233BRC	1	177
K5233BSS	1	177
K5233D6BRC	1	177
K5233D6BSS	1	177
K5233PCR	1	177
K5233SAG	1	177
K5236BRC	1	177
K5236BSS	1	177
K5236PCR	1	177
K5236SAG	1	177
K5240ALM	1	230
K5242ALM	5	230
K5250BRC	1	177
K5250BSS	1	177
K5250PCR	1	177
K5250SAG	1	177
K5252ALM	1	229
K5261BRC	1	178
K5261BSS	1	178
K5261PCR	1	178
K5261SAG	1	178
K5400WHI	1	214
K5403WHI	10	41
K5412L	1	31
K5417R	1	28
K5420R	1	30
K5421	1	28

For product codes that contain a * please see the relevant product page for full details.

Index

LIST NO.	STD PACK	PAGE
K5423D1WHI	10	41
K5423WHI	10	41
K5423WHWHI	10	41
K5427S	1	30
K5431R	1	29
K5432R	1	29
K5433R	1	29
K5436R	1	29
K5437R	1	29
K5511s	1	286
K5545sMAG	10	286
K5563s	5	286
K5565s	5	286
K5567s	5	286
K5568s	5	286
K5590s	1	286
K5593s	1	286
K5597s	5	286
K5599s	5	286
K5604SMAG	1	278
K5604SMET	1	275
K5608SMAG	1	278
K5608SMET	1	275
K5612SMAG	1	278
K5612SMET	1	275
K5616SMAG	1	278
K5616SMET	1	275
K5621SMAG	1	278
K5621SMET	1	275
K5662SMET	1	276
K5666SMET	1	276
K5681SMET	1	276
K5682SMET	1	276
K5683SMET	1	276
K5684SMET	1	276
K5685SMET	1	276

LIST NO.	STD PACK	PAGE
K5686SMET	1	276
K5687SMAG	1	278
K5687SMET	1	276
K5688SMET	1	276
K5689SMET	1	276
K5704SMET	1	275
K5708SMET	1	275
K5712SMET	1	275
K5716SMET	1	275
K5721SMET	1	275
K5744CALU	1	24
K5744CBLK	1	24
K5744CWHI	1	24
K5745BLK	5	49, 127, 165, 233
K5745WHI	5	49, 127, 165, 233
K5746BLK	5	49, 127, 165, 233
K5746SBLK	5	49, 127, 165, 233
K5746SWHI	5	49, 127, 165, 233
K5746WHI	5	49, 127, 165, 233
K5756	1	31
K5776ALU	1	25
K5776BLK	1	25
K5776GLAA	1	25
K5776GLAB	1	25
K5776GLAG	1	25
K5776GLAGA	1	25
K5776WHI	1	25
K5779ALU	1	25
K5779BLK	1	25
K5779GLAA	1	25
K5779GLAB	1	25
K5779GLAG	1	25
K5779GLAGA	1	25
K5779WHI	1	25

LIST NO.	STD PACK	PAGE
K5786ALU	1	24
K5786BLK	1	24
K5786WHI	1	24
K5787WHI	5	49, 127, 165, 233
K5789ALU	1	24
K5789BLK	1	24
K5789WHI	1	24
K5801WHI	5	123, 161, 232
K5804sD1MAG	1	286
K5805BLK	5	48, 96, 126, 164
K5805SBP	5	96
K5805SCW	5	96
K5805SNS	5	96
K5805WHI	5	48, 126, 164
K5806BLK	5	48, 96, 126, 164
K5806SBP	5	96
K5806SCW	5	96
K5806SNS	5	96
K5806WHI	5	48, 126, 164
K5807BLK	5	48, 95, 125, 163
K5807SBP	10	95
K5807SCW	10	95
K5807SNS	10	95
K5807WHI	5	48, 125, 163
K5808sD1MAG	1	286
K5809BLK	5	96
K5809SBP	5	96
K5809SCW	5	96
K5809SNS	5	96
K5812sD1MAG	1	286
K5816sD1MAG	1	286
K5820BLK	5	47, 93, 123, 161, 232, 247
K5820SBP	5	93

For product codes that contain a * please see the relevant product page for full details.

Index

LIST NO.	STD PACK	PAGE
K5820SCW	5	93
K5820SNS	5	93
K5820WHI	5	47, 123, 161, 232, 247
K5821BLK	5	47, 93, 123, 161, 232, 247
K5821SBP	5	93
K5821SCW	5	93
K5821sD1MAG	1	286
K5821SNS	5	93
K5821WHI	5	47, 123, 161, 232, 247
K5830BLK	1	46
K5830BLK	10	46, 95, 121, 159, 185, 231
K5830SBP	10	95
K5830SCW	10	95
K5830SNS	10	95
K5830WHI	1	46
K5830WHI	10	121, 159, 185, 231
K5831BLK	10	46, 95, 121, 159, 185, 231
K5831SBP	10	95
K5831SCW	10	95
K5831SNS	10	95
K5831WHI	10	46, 121, 159, 185, 231
K5832BLK	10	46, 95, 121, 159, 185, 231
K5832SBP	10	95
K5832SCW	10	95
K5832SNS	10	95
K5832WHI	10	46, 121, 159, 185, 231
K5833BLK	10	46, 95, 121, 159, 185, 231
K5833SBP	10	95
K5833SCW	10	95

LIST NO.	STD PACK	PAGE
K5833SNS	10	95
K5833WHI	10	46, 121, 159, 185, 231
K5834BLK	10	46, 121, 159, 185, 231
K5834WHI	10	46, 121, 159, 185, 231
K5837BLK	1	46, 96, 122, 160, 186, 231
K5837SCW	1	96
K5837WHI	1	46, 122, 160, 186, 231
K5844WHI	5	47, 123, 161, 231, 248
K5845BLK	5	47, 123, 161, 231
K5845WHI	5	47, 123, 161, 231
K5846BLK	5	47, 93, 122, 160, 231
K5846SBLK	5	47, 122, 160, 231
K5846SBP	5	93
K5846SCW	5	93
K5846SNS	5	93
K5846SWHI	5	47, 122, 160, 231
K5846WHI	5	47, 122, 160, 231
K5850BLK	5	48, 93, 124, 162
K5850SBP	5	93
K5850SCW	5	93
K5850SNS	5	93
K5850WHI	5	48, 124, 162
K5851BLK	5	48, 94, 124, 162
K5851SBP	5	94
K5851SCW	5	94
K5851SNS	5	94
K5851WHI	5	48, 124, 162
K5852BLK	5	48, 124, 162

LIST NO.	STD PACK	PAGE
K5852DABBLK	5	48, 94, 125, 163
K5852DABSB	5	94
K5852DABSC	5	94
K5852DABSN	5	94
K5852DABWHI	5	48, 125, 163
K5852WHI	5	48, 124, 162
K5853BLK	5	48, 125, 163
K5853DABBLK	5	48, 94, 125, 163
K5853DABSB	5	94
K5853DABSC	5	94
K5853DABSN	5	94
K5853DABWHI	5	48, 125, 163
K5853WHI	5	48, 125, 163
K5854DABBLK	5	48, 94, 125, 163
K5854DABSB	5	94
K5854DABSC	5	94
K5854DABSN	5	94
K5854DABWHI	5	48, 125, 163
K5855BLK	5	48, 94, 124, 162
K5855SBP	5	94
K5855SCW	5	94
K5855SNS	5	94
K5855WHI	5	48, 124, 162
K5864WHI	5	47, 122, 160, 231
K5887BLK	5	47, 93, 122, 160, 231, 248
K5887SBP	5	93
K5887SCW	5	93
K5887SNS	5	93
K5887WHI	5	47, 122, 160, 231, 248
K6060SMET	1	286
K6061SMET	1	286

For product codes that contain a * please see the relevant product page for full details.

Index

LIST NO.	STD PACK	PAGE
K6062SMET	1	286
K6102ALM	1	227, 289
K6231ALM	1	227, 289
K6231WHI	1	36, 289
K6233ALM	1	227, 289
K6233WHI	1	36, 289
K6300WHI	1	36, 289
K6301BRC	1	172, 289
K6301BSS	1	172, 289
K6301PCR	1	172, 289
K6301SAG	1	172, 289
K6302ALM	1	227, 289
K6303WHI	1	36, 289
K6304BRC	1	172, 289
K6304BSS	1	172, 289
K6305ALM	1	227
K6550SMET	1	277
K6551SMET	1	277
K6552SMET	1	277
K6725	1	252
K6725YEL	1	252
K6816	5	251
K6816YEL	5	251
K6825	5	251
K6825YEL	5	251
K6840	1	252
K6840YEL	1	252
K6863	1	252
K6863YEL	1	252
K7663SMET	1	277
K7664SMET	1	277
K7665SMET	1	277
K7666SMET	1	277
K7673SMET	1	277
K7678SMET	1	277
K8041s	10	286

LIST NO.	STD PACK	PAGE
K8821ALM	10	206
K8822ALM	5	206
K8822ALM	10	206
K8823ALM	1	206
K8823ALM	5	207
K8825ALM	1	207
K8826ALM	1	207
K8827ALM	1	207
K8891ALM	10	206
K8892ALM	5	206
K8893ALM	5	206
K8895ALM	1	207
K8898ALM	1	207
K8900ALM	1	207
K8901ALM	5	206
K8902ALM	5	206
K9000YEL	1	256
K9001BLU	1	258
K9006BLU	1	258
K9007RED	1	260
K9014BLU	1	258
K9015RED	1	260
K9023YEL	1	256
K9024BLU	1	258
K9025RED	1	260
K9026RED	1	260
K9032YEL	1	256
K9033BLU	1	258
K9036BLU	1	258
K9037RED	1	260
K9044BLU	1	258
K9045RED	1	260
K9053YEL	1	256
K9054BLU	1	258
K9055RED	1	260
K9056RED	1	260

LIST NO.	STD PACK	PAGE
K9063BLU	1	258
K9066RED	1	260
K9071RED	1	260
K9081BLU	1	258
K9082BLU	1	258
K9083BLU	1	258
K9100YEL	1	256
K9101BLU	1	258
K9106BLU	1	258
K9107RED	1	260
K9114BLU	1	258
K9115RED	1	260
K9123YEL	1	256
K9124BLU	1	258
K9125RED	1	260
K9126RED	1	260
K9132YEL	1	256
K9133BLU	1	258
K9136BLU	1	258
K9137RED	1	260
K9143BLU	1	258
K9144RED	1	260
K9155YEL	1	256
K9156BLU	1	258
K9157RED	1	260
K9158RED	1	260
K9165RED	1	260
K9170RED	1	260
K9172BLU	1	258
K9193YEL	1	256
K9194BLU	1	258
K9200YEL	1	256
K9201BLU	1	258
K9206BLU	1	258
K9207RED	1	260
K9214BLU	1	258

For product codes that contain a * please see the relevant product page for full details.

Index

LIST NO.	STD PACK	PAGE
K9215RED	1	260
K9232YEL	1	256
K9233BLU	1	258
K9236BLU	1	258
K9237RED	1	260
K9240BLU	1	258
K9241RED	1	260
K9265RED	1	260
K9269RED	1	260
K9274BLU	1	258
K9282RED	1	260
K9292RED	1	260
K9298BLU	1	258
K9306BLU	1	259
K9400YEL	1	256, 432
K9401BLU	1	258, 432
K9407RED	1	260
K9432RED	1	260
K9432YEL	1	256
K9433BLU	1	258
K9437RED	1	260
K9445RED	1	260
K9470RED	1	260
K9472BLU	1	258
K9601BLU	1	259
K9607BLU	1	259
K9633BLU	1	259
K9639BLU	1	259
K9665RED	1	261
K9701BLU	1	259
K9733BLU	1	259
K9761YEL	1	256
K9762BLU	1	258
K9763RED	1	260
K9764RED	1	260
K9765RED	1	260

LIST NO.	STD PACK	PAGE
K9766RED	1	260
K9771BLU	1	259
K9774BLU	1	259
K9802YEL	1	256
K9842RED	1	260
K9852RED	1	260
K9856BLU	1	258
K9857BLU	1	258
K9858RED	1	260
K9859RED	1	260
K10000-K99999		
K13024BLU	1	258
K13054BLU	1	258
K13232YEL	1	256
K13300YEL	1	256
K13301BLU	1	258
K13303YEL	1	256
K13309YEL	1	266
K13311RED	1	266
K13312RED	1	266
K13315RED	1	260
K13323YEL	1	256
K13333BLU	1	258
K13342YEL	1	266
K13343BLU	1	266
K13344RED	1	266
K13345RED	1	266
K13346YEL	1	267
K13348BLU	1	267
K13349BLU	1	267
K13351RED	1	267
K13352RED	1	267
K13413YEL	1	266
K13415RED	1	266
K13416RED	1	266
K13434RED	1	266

LIST NO.	STD PACK	PAGE
K13471ABSB	1	141
K13471BRC*	1	141
K13471BSS*	1	141
K13471DBZB	1	141
K13471LBKB	1	141
K13471LBS*	1	141
K13471LIVW	1	141
K13471PBR*	1	141
K13471POC*	1	141
K13471SAG*	1	141
K13471TCOB	1	141
K13471TIRB	1	141
K13471WHIW	1	141
K13472ABSB	1	141
K13472BRC*	1	141
K13472BSS*	1	141
K13472DBZB	1	141
K13472LBKB	1	141
K13472LBS*	1	141
K13472LIVW	1	141
K13472PBR*	1	141
K13472POC*	1	141
K13472SAG*	1	141
K13472TCOB	1	141
K13472TIRB	1	141
K13472WHIW	1	141
K13476ABSB	1	27
K13476BRC*	1	27
K13476BSS*	1	27
K13476DBZB	1	27
K13476LBKB	1	27
K13476LBS*	1	27
K13476LIVW	1	27
K13476PBR*	1	27
K13476POC*	1	27
K13476SAG*	1	27

For product codes that contain a * please see the relevant product page for full details.

Index

LIST NO.	STD PACK	PAGE
K13476TCOB	1	27
K13476TIRB	1	27
K13476WHIW	1	27
K13477ABSB	1	27
K13477BRC*	1	27
K13477BSS*	1	27
K13477DBZB	1	27
K13477LBKB	1	27
K13477LBS*	1	27
K13477LIVW	1	27
K13477PBR*	1	27
K13477POC*	1	27
K13477SAG*	1	27
K13477TCOB	1	27
K13477TIRB	1	27
K13477WHIW	1	27
K13607RED	1	261
K13625RED	1	260
K13632YEL	1	257
K13637RED	1	261
K13653YEL	1	257
K13655RED	1	260
K13713YEL	1	267
K13716RED	1	267
K13733BLU	1	267
K14100ABSB	1	134
K14100BRC*	1	134
K14100BSS*	1	134
K14100DBZB	1	134
K14100LBKB	1	134
K14100LBS*	1	134
K14100LIVW	1	134
K14100PBR	1	134
K14100POC*	1	134
K14100SAG*	1	134
K14100TCOB	1	134

LIST NO.	STD PACK	PAGE
K14100TIRB	1	134
K14100WHIW	1	134
K14101	1	212
K14102	1	212
K14114ABSB	1	142
K14114BRC*	1	142
K14114BSS*	1	142
K14114DBZB	1	142
K14114LBKB	1	142
K14114LBS*	1	142
K14114LIVW	1	142
K14114PBR*	1	142
K14114POC*	1	142
K14114SAG*	1	142
K14114TCOB	1	142
K14114TIRB	1	142
K14114WHIW	1	142
K14172ABSB	1	127, 165
K14172BRC*	1	127, 165
K14172BSS*	1	127, 165
K14172DBZB	1	127, 165
K14172LBK	1	127, 165
K14172LBS*	1	127, 165
K14172LIVW	1	127, 165
K14172PBRB	1	127, 165
K14172POC*	1	127, 165
K14172SAG*	1	127, 165
K14172TCOB	1	127, 165
K14172TIRB	1	127, 165
K14172WHIW	1	127, 165
K14181ABS	1	158
K14181BRC	1	158
K14181BSS	1	158
K14181DBZ	1	158
K14181LBK	1	158
K14181LBS	1	158

LIST NO.	STD PACK	PAGE
K14181LIV	1	158
K14181PBR	1	158
K14181POC	1	158
K14181SAG	1	158
K14181TCO	1	158
K14181TIR	1	158
K14181WHI	1	158
K14182ABS	1	158
K14182BRC	1	158
K14182BSS	1	158
K14182DBZ	1	158
K14182LBK	1	158
K14182LBS	1	158
K14182LIV	1	158
K14182PBR	1	158
K14182POC	1	158
K14182SAG	1	158
K14182TCO	1	158
K14182TIR	1	158
K14182WHI	1	158
K14184ABS	1	158
K14184BRC	1	158
K14184BSS	1	158
K14184DBZ	1	158
K14184LBK	1	158
K14184LBS	1	158
K14184LIV	1	158
K14184PBR	1	158
K14184POC	1	158
K14184SAG	1	158
K14184TCO	1	158
K14184TIR	1	158
K14184WHI	1	158
K14200ABSB	1	134
K14200BRC*	1	134
K14200BSS*	1	134

For product codes that contain a * please see the relevant product page for full details.

Index

LIST NO.	STD PACK	PAGE
K14200DBZB	1	134
K14200LBKB	1	134
K14200LBS*	1	134
K14200LIVW	1	134
K14200PBR	1	134
K14200POC*	1	134
K14200SAG*	1	134
K14200TCOB	1	134
K14200TIRB	1	134
K14200WHIW	1	134
K14201	1	212
K14202	1	212
K14205ABSB	1	134
K14205BRC*	1	134
K14205BSS*	1	134
K14205DBZB	1	134
K14205LBKB	1	134
K14205LBS*	1	134
K14205LIVW	1	134
K14205PBR	1	134
K14205POC*	1	134
K14205SAG*	1	134
K14205TCOB	1	134
K14205TIRB	1	134
K14205WHIW	1	134
K14206	1	212
K14207	1	212
K14208ABSB	1	135
K14208BRC*	1	135
K14208BSS*	1	135
K14208DBZB	1	135
K14208LBKB	1	135
K14208LBS*	1	135
K14208LIVW	1	135
K14208PBR*	1	135
K14208POC*	1	135

LIST NO.	STD PACK	PAGE
K14208SAG*	1	135
K14208TCOB	1	135
K14208TIRB	1	135
K14208WHIW	1	135
K14209ABSB	1	135
K14209BRC*	1	135
K14209BSS*	1	135
K14209DBZB	1	135
K14209LBKB	1	135
K14209LBS*	1	135
K14209LIVW	1	135
K14209PBR*	1	135
K14209POC*	1	135
K14209SAG*	1	135
K14209TCOB	1	135
K14209TIRB	1	135
K14209WHIW	1	135
K14210ABSB	1	135
K14210BRC*	1	135
K14210BSS*	1	135
K14210DBZB	1	135
K14210LBKB	1	135
K14210LBS*	1	135
K14210LIVW	1	135
K14210PBR*	1	135
K14210POC*	1	135
K14210SAG*	1	135
K14210TCOB	1	135
K14210TIRB	1	135
K14210WHIW	1	135
K14216ABSB	1	135
K14216BRC*	1	135
K14216BSS*	1	135
K14216DBZB	1	135
K14216LBKB	1	135
K14216LBS*	1	135

LIST NO.	STD PACK	PAGE
K14216LIVW	1	135
K14216PBR*	1	135
K14216POC*	1	135
K14216SAG*	1	135
K14216TCOB	1	135
K14216TIRB	1	135
K14216WHIW	1	135
K14217ABSB	1	135
K14217BRC*	1	135
K14217BSS*	1	135
K14217DBZB	1	135
K14217LBKB	1	135
K14217LBS*	1	135
K14217LIVW	1	135
K14217PBR*	1	135
K14217POC*	1	135
K14217SAG*	1	135
K14217TCOB	1	135
K14217TIRB	1	135
K14217WHIW	1	135
K14246ABSB	1	133
K14246BRC*	1	133
K14246BSS*	1	133
K14246DBZB	1	133
K14246LBKB	1	133
K14246LBS*	1	133
K14246LIVW	1	133
K14246PBR*	1	133
K14246POC*	1	133
K14246SAG*	1	133
K14246TCOB	1	133
K14246TIRB	1	133
K14246WHIW	1	133
K14268ABSB	1	132
K14268BRC*	1	132
K14268BSS*	1	132

For product codes that contain a * please see the relevant product page for full details.

Index

LIST NO.	STD PACK	PAGE
K14268DBZB	1	132
K14268LBKB	1	132
K14268LBS*	1	132
K14268LIVW	1	132
K14268PBR*	1	132
K14268POC*	1	132
K14268SAG*	1	132
K14268TCOB	1	132
K14268TIRB	1	132
K14268WHIW	1	132
K14301ABS	1	143
K14301BRC	1	143
K14301BSS	1	143
K14301DBZ	1	143
K14301LBK	1	143
K14301LBS	1	143
K14301LIV	1	143
K14301PBR	1	143
K14301POC	1	143
K14301SAG	1	143
K14301TCO	1	143
K14301TIR	1	143
K14301WHI	1	143
K14302ABS	1	143
K14302BRC	1	143
K14302BSS	1	143
K14302DBZ	1	143
K14302LBK	1	143
K14302LBS	1	143
K14302LIV	1	143
K14302PBR	1	143
K14302POC	1	143
K14302SAG	1	143
K14302TCO	1	143
K14302TIR	1	143
K14302WHI	1	143

LIST NO.	STD PACK	PAGE
K14305ABSB	1	142
K14305BRC*	1	142
K14305BSS*	1	142
K14305DBZB	1	142
K14305LBKB	1	142
K14305LBS*	1	142
K14305LIVW	1	142
K14305PBR*	1	142
K14305POC*	1	142
K14305SAG*	1	142
K14305TCOB	1	142
K14305TIRB	1	142
K14305WHIW	1	142
K14329ABS	1	166
K14329BRC	1	166
K14329BSS	1	166
K14329DBZ	1	166
K14329LBK	1	166
K14329LBS	1	166
K14329LIV	1	166
K14329PBR	1	166
K14329POC	1	166
K14329SAG	1	166
K14329TCO	1	166
K14329TIR	1	166
K14329WHI	1	166
K14330ABS	1	166
K14330BRC	1	166
K14330BSS	1	166
K14330DBZ	1	166
K14330LBK	1	166
K14330LBS	1	166
K14330LIV	1	166
K14330PBR	1	166
K14330POC	1	166
K14330SAG	1	166

LIST NO.	STD PACK	PAGE
K14330TCO	1	166
K14330TIR	1	166
K14330WHI	1	166
K14331ABS	1	145
K14331BRC	1	145
K14331BSS	1	145
K14331DBZ	1	145
K14331LBK	1	145
K14331LBS	1	145
K14331LIV	1	145
K14331PBR	1	145
K14331POC	1	145
K14331SAG	1	145
K14331TCO	1	145
K14331TIR	1	145
K14331WHI	1	145
K14332ABS	1	145
K14332BRC	1	145
K14332BSS	1	145
K14332DBZ	1	145
K14332LBK	1	145
K14332LBS	1	145
K14332LIV	1	145
K14332PBR	1	145
K14332POC	1	145
K14332SAG	1	145
K14332TCO	1	145
K14332TIR	1	145
K14333ABS	1	146
K14333BRC	1	146
K14333BSS	1	146
K14333DBZ	1	146
K14333LBK	1	146
K14333LBS	1	146
K14333LIV	1	146
K14333PBR	1	146

For product codes that contain a * please see the relevant product page for full details.

Index

LIST NO.	STD PACK	PAGE
K14333POC	1	146
K14333SAG	1	146
K14333TCO	1	146
K14333TIR	1	146
K14333WHI	1	146
K14334ABS	1	146
K14334BRC	1	146
K14334BSS	1	146
K14334DBZ	1	146
K14334LBK	1	146
K14334LBS	1	146
K14334LIV	1	146
K14334PBR	1	146
K14334POC	1	146
K14334SAG	1	146
K14334TCO	1	146
K14334TIR	1	146
K14334WHI	1	146
K14336BSS*	1	142
K14343ABSB	1	132
K14343BRC*	1	132
K14343BSS*	1	132
K14343DBZB	1	132
K14343LBKB	1	132
K14343LBS*	1	132
K14343LIVW	1	132
K14343PBR*	1	132
K14343POC*	1	132
K14343SAG*	1	132
K14343TCOB	1	132
K14343TIRB	1	132
K14343WHIW	1	132
K14345ABSB	1	133
K14345BRC*	1	133
K14345BSS*	1	133
K14345DBZB	1	133

LIST NO.	STD PACK	PAGE
K14345LBKB	1	133
K14345LBS*	1	133
K14345LIVW	1	133
K14345PBR*	1	133
K14345POC*	1	133
K14345SAG*	1	133
K14345TCOB	1	133
K14345TIRB	1	133
K14345WHIW	1	133
K14346ABS	1	146
K14346BRC	1	146
K14346BSS	1	146
K14346DBZ	1	146
K14346LBK	1	146
K14346LBS	1	146
K14346LIV	1	146
K14346PBR	1	146
K14346POC	1	146
K14346SAG	1	146
K14346TCO	1	146
K14346TIR	1	146
K14346WHI	1	146
K14347ABSB	1	132
K14347BRC*	1	132
K14347BSS*	1	132
K14347DBZB	1	132
K14347LBKB	1	132
K14347LBS*	1	132
K14347LIVW	1	132
K14347PBR*	1	132
K14347POC*	1	132
K14347SAG*	1	132
K14347TCOB	1	132
K14347TIRB	1	132
K14347WHIW	1	132
K14348ABS	1	146

LIST NO.	STD PACK	PAGE
K14348BRC	1	146
K14348BSS	1	146
K14348DBZ	1	146
K14348LBK	1	146
K14348LBS	1	146
K14348LIV	1	146
K14348PBR	1	146
K14348POC	1	146
K14348SAG	1	146
K14348TCO	1	146
K14348TIR	1	146
K14348WHI	1	146
K14349ABS	1	146
K14349BRC	1	146
K14349BSS	1	146
K14349DBZ	1	146
K14349LBK	1	146
K14349LBS	1	146
K14349LIV	1	146
K14349PBR	1	146
K14349POC	1	146
K14349SAG	1	146
K14349TCO	1	146
K14349TIR	1	146
K14349WHI	1	146
K14352ABS	1	147
K14352BRC	1	147
K14352BSS	1	147
K14352DBZ	1	147
K14352LBK	1	147
K14352LBS	1	147
K14352LIV	1	147
K14352PBR	1	147
K14352POC	1	147
K14352SAG	1	147
K14352TCO	1	147

For product codes that contain a * please see the relevant product page for full details.

Index

LIST NO.	STD PACK	PAGE
K14352TIR	1	147
K14352WHI	1	147
K14354ABS	1	147
K14354BRC	1	147
K14354BSS	1	147
K14354DBZ	1	147
K14354LBK	1	147
K14354LBS	1	147
K14354LIV	1	147
K14354PBR	1	147
K14354POC	1	147
K14354SAG	1	147
K14354TCO	1	147
K14354TIR	1	147
K14354WHI	1	147
K14355ABSB	1	138
K14355BRC*	1	138
K14355BSS*	1	138
K14355DBZB	1	138
K14355LBKB	1	138
K14355LBS*	1	138
K14355LIVW	1	138
K14355PBR	1	138
K14355POC*	1	138
K14355SAG*	1	138
K14355TCOB	1	138
K14355TIRB	1	138
K14355WHIW	1	138
K14357ABSB	1	132
K14357BRC*	1	132
K14357BSS*	1	132
K14357DBZB	1	132
K14357LBKB	1	132
K14357LBS*	1	132
K14357LIVW	1	132
K14357PBR*	1	132
K14357POC*	1	132
K14357SAG*	1	132
K14357TCOB	1	132

LIST NO.	STD PACK	PAGE
K14357TIRB	1	132
K14357WHIW	1	132
K14358ABS	1	147
K14358BRC	1	147
K14358BSS	1	147
K14358DBZ	1	147
K14358LBK	1	147
K14358LBS	1	147
K14358LIV	1	147
K14358PBR	1	147
K14358POC	1	147
K14358SAG	1	147
K14358TCO	1	147
K14358TIR	1	147
K14358WHI	1	147
K14361ABSB	1	142
K14361BRC*	1	142
K14361BSS*	1	142
K14361DBZB	1	142
K14361LBKB	1	142
K14361LBS*	1	142
K14361LIVW	1	142
K14361PBR*	1	142
K14361POC*	1	142
K14361SAG*	1	142
K14361TCOB	1	142
K14361TIRB	1	142
K14361WHIW	1	142
K14371ABSB	1	141
K14371BRC*	1	141
K14371BSS*	1	141
K14371DBZB	1	141
K14371LBKB	1	141
K14371LBS*	1	141
K14371LIVW	1	141
K14371PBR*	1	141
K14371POC*	1	141
K14371SAG*	1	141
K14371TCOB	1	141

LIST NO.	STD PACK	PAGE
K14371TIRB	1	141
K14371WHIW	1	141
K14372ABSB	1	141
K14372BRC*	1	141
K14372BSS*	1	141
K14372DBZB	1	141
K14372LBKB	1	141
K14372LBS*	1	141
K14372LIVW	1	141
K14372PBR*	1	141
K14372POC*	1	141
K14372SAG*	1	141
K14372TCOB	1	141
K14372TIRB	1	141
K14372WHIW	1	141
K14373ABSB	1	141
K14373BRC*	1	141
K14373BSS*	1	141
K14373DBZB	1	141
K14373LBKB	1	141
K14373LBS*	1	141
K14373LIVW	1	141
K14373PBR*	1	141
K14373POC*	1	141
K14373SAG*	1	141
K14373TCOB	1	141
K14373TIRB	1	141
K14373WHIW	1	141
K14378BSS*	1	138
K14379BSS*	1	138
K14380ABSB	1	136
K14380BRC*	1	136
K14380BSS*	1	136
K14380DBZB	1	136
K14380LBKB	1	136
K14380LBS*	1	136
K14380LIVW	1	136
K14380PBR*	1	136
K14380POC*	1	136

For product codes that contain a * please see the relevant product page for full details.

Index

LIST NO.	STD PACK	PAGE
K14380SAG*	1	136
K14380TCOB	1	136
K14380TIRB	1	136
K14380WHIW	1	136
K14381ABSB	1	136
K14381BRC*	1	136
K14381BSS*	1	136
K14381DBZB	1	136
K14381LBKB	1	136
K14381LBS*	1	136
K14381LIVW	1	136
K14381PBR*	1	136
K14381POC*	1	136
K14381SAG*	1	136
K14381TCOB	1	136
K14381TIRB	1	136
K14381WHIW	1	136
K14382ABSB	1	133
K14382BRC*	1	133
K14382BSS*	1	133
K14382DBZB	1	133
K14382LBKB*	1	133
K14382LBS*	1	133
K14382LIVW	1	133
K14382PBR*	1	133
K14382POC*	1	133
K14382SAG*	1	133
K14382TCOB	1	133
K14382TIRB	1	133
K14382WHIW	1	133
K14383ABSB	1	133
K14383BRC*	1	133
K14383BSS*	1	133
K14383DBZB	1	133
K14383LBKB	1	133
K14383LBS*	1	133
K14383LIVW	1	133
K14383PBR*	1	133
K14383POC*	1	133

LIST NO.	STD PACK	PAGE
K14383SAG*	1	133
K14383TCOB	1	133
K14383TIRB	1	133
K14383WHIW	1	133
K14401ABS	1	147
K14401BRC	1	147
K14401BSS	1	147
K14401DBZ	1	147
K14401LBK	1	147
K14401LBS	1	147
K14401LIV	1	147
K14401PBR	1	147
K14401POC	1	147
K14401SAG	1	147
K14401TCO	1	147
K14401TIR	1	147
K14401WHI	1	147
K14431ABS	1	144
K14431BRC	1	144
K14431BSS	1	144
K14431DBZ	1	144
K14431LBK	1	144
K14431LBS	1	144
K14431LIV	1	144
K14431PBR	1	144
K14431POC	1	144
K14431SAG	1	144
K14431TCO	1	144
K14431TIR	1	144
K14431WHI	1	144
K14432ABS	1	144
K14432BRC	1	144
K14432BSS	1	144
K14432DBZ	1	144
K14432LBK	1	144
K14432LBS	1	144
K14432LIV	1	144
K14432PBR	1	144
K14432POC	1	144

LIST NO.	STD PACK	PAGE
K14432SAG	1	144
K14432TCO	1	144
K14432TIR	1	144
K14432WHI	1	144
K14433ABS	1	144
K14433BRC	1	144
K14433BSS	1	144
K14433DBZ	1	144
K14433LBK	1	144
K14433LBS	1	144
K14433LIV	1	144
K14433PBR	1	144
K14433POC	1	144
K14433SAG	1	144
K14433TCO	1	144
K14433TIR	1	144
K14433WHI	1	144
K14434ABS	1	144
K14434BRC	1	144
K14434BSS	1	144
K14434DBZ	1	144
K14434LBK	1	144
K14434LBS	1	144
K14434LIV	1	144
K14434PBR	1	144
K14434POC	1	144
K14434SAG	1	144
K14434TCO	1	144
K14434TIR	1	144
K14434WHI	1	144
K14521ABS	1	143
K14521BRC	1	143
K14521BSS	1	143
K14521DBZ	1	143
K14521LBK	1	143
K14521LBS	1	143
K14521LIV	1	143
K14521PBR	1	143
K14521POC	1	143
K14521SAG	1	143

For product codes that contain a * please see the relevant product page for full details.

Index

LIST NO.	STD PACK	PAGE
K14521TCO	1	143
K14521TIR	1	143
K14521WHI	1	143
K14522ABS	1	143
K14522BRC	1	143
K14522BSS	1	143
K14522DBZ	1	143
K14522LBK	1	143
K14522LBS	1	143
K14522LIV	1	143
K14522PBR	1	143
K14522POC	1	143
K14522SAG	1	143
K14522TCO	1	143
K14522TIR	1	143
K14522WHI	1	143
K14647ABSB	1	133
K14647BRC*	1	133
K14647BSS*	1	133
K14647DBZB	1	133
K14647LBKB	1	133
K14647LBS*	1	133
K14647LIVW	1	133
K14647PBR*	1	133
K14647POC*	1	133
K14647SAG*	1	133
K14647TCOB	1	133
K14647TIRB	1	133
K14647WHIW	1	133
K14657ABSB	1	132
K14657BRC*	1	132
K14657BSS*	1	132
K14657DBZB	1	132
K14657LBKB	1	132
K14657LBS*	1	132
K14657LIVW	1	132
K14657PBR*	1	132
K14657POC*	1	132
K14657SAG*	1	132
K14657TCOB	1	132
K14657TIRB	1	132
K14657WHIW	1	132
K14701	10	147

LIST NO.	STD PACK	PAGE
K14702	10	147
K14703	10	148
K14704	10	148
K14706	10	148
K14709ABSB	1	138
K14709BRC*	1	138
K14709BSS*	1	138
K14709DBZB	1	138
K14709LBKB	1	138
K14709LBS*	1	138
K14709LIVW	1	138
K14709PBR	1	138
K14709POC*	1	138
K14709SAG*	1	138
K14709TCOB	1	138
K14709TIRB	1	138
K14709WHIW	1	138
K14710ABSB	1	138
K14710BRC*	1	138
K14710BSS*	1	138
K14710DBZB	1	138
K14710LBKB	1	138
K14710LBS*	1	138
K14710LIVW	1	138
K14710PBR	1	138
K14710POC*	1	138
K14710SAG*	1	138
K14710TCOB	1	138
K14710TIRB	1	138
K14710WHIW	1	138
K14780ABSB	1	136
K14780BRC*	1	136
K14780BSS*	1	136
K14780DBZB	1	136
K14780LBKB	1	136
K14780LBS*	1	136
K14780LIVW	1	136
K14780PBR*	1	136
K14780POC*	1	136
K14780SAG*	1	136
K14780TCOB	1	136
K14780TIRB	1	136
K14780WHIW	1	136

LIST NO.	STD PACK	PAGE
K14781ABSB	1	136
K14781BRC*	1	136
K14781BSS*	1	136
K14781DBZB	1	136
K14781LBKB	1	136
K14781LBS*	1	136
K14781LIVW	1	136
K14781PBR*	1	136
K14781POC*	1	136
K14781SAG*	1	136
K14781TCOB	1	136
K14781TIRB	1	136
K14781WHIW	1	136
K14790ABS	1	137
K14790BRC	1	137
K14790BSS	1	137
K14790DBZ	1	137
K14790LBK	1	137
K14790LBS	1	137
K14790LIV	1	137
K14790PBR	1	137
K14790POC	1	137
K14790SAG	1	137
K14790TCO	1	137
K14790TIR	1	137
K14790WHI	1	137
K14791ABS	1	137
K14791BRC	1	137
K14791BSS	1	137
K14791DBZ	1	137
K14791LBK	1	137
K14791LBS	1	137
K14791LIV	1	137
K14791PBR	1	137
K14791POC	1	137
K14791SAG	1	137
K14791TCO	1	137
K14791TIR	1	137
K14791WHI	1	137
K14801	10	148
K14859ABSB	1	142
K14859BRC*	1	142
K14859BSS*	1	142

For product codes that contain a * please see the relevant product page for full details.

Index

LIST NO.	STD PACK	PAGE
K14859DBZB	1	142
K14859LBKB	1	142
K14859LBS*	1	142
K14859LIVW	1	142
K14859PBR*	1	142
K14859POC*	1	142
K14859SAG*	1	142
K14859TCOB	1	142
K14859TIRB	1	142
K14859WHIW	1	142
K14891ABS	1	145
K14891BRC	1	145
K14891BSS	1	145
K14891DBZ	1	145
K14891LBK	1	145
K14891LBS	1	145
K14891LIV	1	145
K14891PBR	1	145
K14891POC	1	145
K14891SAG	1	145
K14891TCO	1	145
K14891TIR	1	145
K14891WHI	1	145
K14892ABS	1	145
K14892BRC	1	145
K14892BSS	1	145
K14892DBZ	1	145
K14892LBK	1	145
K14892LBS	1	145
K14892LIV	1	145
K14892PBR	1	145
K14892POC	1	145
K14892SAG	1	145
K14892TCO	1	145
K14892TIR	1	145
K14892WHI	1	145
K14893ABS	1	145
K14893BRC	1	145
K14893BSS	1	145
K14893DBZ	1	145
K14893LBK	1	145
K14893LBS	1	145
K14893LIV	1	145

LIST NO.	STD PACK	PAGE
K14893PBR	1	145
K14893POC	1	145
K14893SAG	1	145
K14893TCO	1	145
K14893TIR	1	145
K14893WHI	1	145
K14896ABS	1	145
K14896BRC	1	145
K14896BSS	1	145
K14896DBZ	1	145
K14896LBK	1	145
K14896LBS	1	145
K14896LIV	1	145
K14896PBR	1	145
K14896POC	1	145
K14896SAG	1	145
K14896TCO	1	145
K14896TIR	1	145
K14896WHI	1	145
K14931ABSB	1	139
K14931BRC*	1	139
K14931BSS*	1	139
K14931DBZB	1	139
K14931LBKB	1	139
K14931LBS*	1	139
K14931LIVW	1	139
K14931PBR*	1	139
K14931POC*	1	139
K14931SAG*	1	139
K14931TCOB	1	139
K14931TIRB	1	139
K14931WHIW	1	139
K14941ABSB	1	139
K14941BRC*	1	139
K14941BSS*	1	139
K14941DBZB	1	139
K14941LBKB	1	139
K14941LBS*	1	139
K14941LIVW	1	139
K14941PBR*	1	139
K14941POC*	1	139
K14941SAG*	1	139
K14941TCOB	1	139

LIST NO.	STD PACK	PAGE
K14941TIRB	1	139
K14941WHIW	1	139
K14948ABSB	1	140
K14948BRC*	1	140
K14948BSS*	1	140
K14948DBZB	1	140
K14948LBKB	1	140
K14948LBS*	1	140
K14948LIVW	1	140
K14948PBR*	1	140
K14948POC*	1	140
K14948SAG*	1	140
K14948TCOB	1	140
K14948TIRB	1	140
K14948WHIW	1	140
K14958ABSB	1	140
K14958BRC*	1	140
K14958BSS*	1	140
K14958DBZB	1	140
K14958LBKB	1	140
K14958LBS*	1	140
K14958LIVW	1	140
K14958PBR*	1	140
K14958POC*	1	140
K14958SAG*	1	140
K14958TCOB	1	140
K14958TIRB	1	140
K14958WHIW	1	140
K14961ABSB	1	139
K14961BRC*	1	139
K14961BSS*	1	139
K14961DBZB	1	139
K14961LBKB	1	139
K14961LBS*	1	139
K14961LIVW	1	139
K14961PBR*	1	139
K14961POC*	1	139
K14961SAG*	1	139
K14961TCOB	1	139
K14961TIRB	1	139
K14961WHIW	1	139
K14971ABSB	1	139

For product codes that contain a * please see the relevant product page for full details.

Index

LIST NO.	STD PACK	PAGE
K14971BRC*	1	139
K14971BSS*	1	139
K14971DBZB	1	139
K14971LBKB	1	139
K14971LBS*	1	139
K14971LIVW	1	139
K14971PBR*	1	139
K14971POC*	1	139
K14971SAG*	1	139
K14971TCOB	1	139
K14971TIRB	1	139
K14971WHIW	1	139
K14978ABSB	1	140
K14978BRC*	1	140
K14978BSS*	1	140
K14978DBZB	1	140
K14978LBKB	1	140
K14978LBS*	1	140
K14978LIVW	1	140
K14978PBR*	1	140
K14978POC*	1	140
K14978SAG*	1	140
K14978TCOB	1	140
K14978TIRB	1	140
K14978WHIW	1	140
K14989ABSB	1	140
K14989BRC*	1	140
K14989BSS*	1	140
K14989DBZB	1	140
K14989LBKB	1	140
K14989LBS*	1	140
K14989LIVW	1	140
K14989PBR*	1	140
K14989POC*	1	140
K14989SAG*	1	140
K14989TCOB	1	140
K14989TIRB	1	140
K14989WHIW	1	140
K23471ABSB	1	106
K23471BRC	1	106
K23471BSS	1	106
K23471DBZB	1	106
K23471LBKB	1	106

LIST NO.	STD PACK	PAGE
K23471LBS	1	106
K23471LIVW	1	106
K23471PBR	1	106
K23471POC	1	106
K23471SAG	1	106
K23471TCOB	1	106
K23471TIRB	1	106
K23471WHIW	1	106
K23472ABSB	1	106
K23472BRC	1	106
K23472BSS	1	106
K23472DBZB	1	106
K23472LBKB	1	106
K23472LBS	1	106
K23472LIVW	1	106
K23472PBR	1	106
K23472POC	1	106
K23472SAG	1	106
K23472TCOB	1	106
K23472TIRB	1	106
K23472WHIW	1	106
K23473ABSB	1	106
K23473BRC	1	106
K23473BSS	1	106
K23473DBZB	1	106
K23473LBKB	1	106
K23473LBS	1	106
K23473LIVW	1	106
K23473PBR	1	106
K23473POC	1	106
K23473SAG	1	106
K23473TCOB	1	106
K23473TIRB	1	106
K23473WHIW	1	106
K23476ABSB	1	26
K23476BRC*	1	26
K23476BSS*	1	26
K23476DBZB	1	26
K23476LBKB	1	26
K23476LBS*	1	26
K23476LIVW	1	26
K23476PBR*	1	26
K23476POC*	1	26

LIST NO.	STD PACK	PAGE
K23476SAG*	1	26
K23476TCOB	1	26
K23476TIRB	1	26
K23476WHIW	1	26
K23477ABSB	1	26
K23477BRC*	1	26
K23477BSS*	1	26
K23477DBZB	1	26
K23477LBKB	1	26
K23477LBS*	1	26
K23477LIVW	1	26
K23477PBR*	1	26
K23477POC*	1	26
K23477SAG*	1	26
K23477TCOB	1	26
K23477TIRB	1	26
K23477WHIW	1	26
K24181ABS	1	120
K24181BRC	1	120
K24181BSS	1	120
K24181DBZ	1	120
K24181LBK	1	120
K24181LBS	1	120
K24181LIV	1	120
K24181PBR	1	120
K24181POC	1	120
K24181SAG	1	120
K24181TCO	1	120
K24181TIR	1	120
K24181WHI	1	120
K24182ABS	1	120
K24182BRC	1	120
K24182BSS	1	120
K24182DBZ	1	120
K24182LBK	1	120
K24182LBS	1	120
K24182LIV	1	120
K24182PBR	1	120
K24182POC	1	120
K24182SAG	1	120
K24182TCO	1	120
K24182TIR	1	120
K24182WHI	1	120

For product codes that contain a * please see the relevant product page for full details.

Index

LIST NO.	STD PACK	PAGE
K24184ABS	1	120
K24184BRC	1	120
K24184BSS	1	120
K24184DBZ	1	120
K24184LBK	1	120
K24184LBS	1	120
K24184LIV	1	120
K24184PBR	1	120
K24184POC	1	120
K24184SAG	1	120
K24184TCO	1	120
K24184TIR	1	120
K24184WHI	1	120
K24206ABSB	1	101
K24206BRC	1	101
K24206BSS	1	101
K24206DBZB	1	101
K24206LBKB	1	101
K24206LBS	1	101
K24206LIVW	1	101
K24206PBR	1	101
K24206POC	1	101
K24206SAG	1	101
K24206TCOB	1	101
K24206TIRB	1	101
K24206WHIW	1	101
K24207ABSB	1	101
K24207BRC	1	101
K24207BSS	1	101
K24207DBZB	1	101
K24207LBKB	1	101
K24207LBS	1	101
K24207LIVW	1	101
K24207PBR	1	101
K24207POC	1	101
K24207SAG	1	101
K24207TCOB	1	101
K24207TIRB	1	101
K24207WHIW	1	101
K24208ABSB	1	102
K24208BRC	1	102
K24208BSS	1	102
K24208DBZB	1	102

LIST NO.	STD PACK	PAGE
K24208LBKB	1	102
K24208LBS	1	102
K24208LIVW	1	102
K24208PBR	1	102
K24208POC	1	102
K24208SAG	1	102
K24208TCOB	1	102
K24208TIRB	1	102
K24208WHIW	1	102
K24209ABS	1	102
K24209BRC	1	102
K24209BSS	1	102
K24209DBZ	1	102
K24209LBK	1	102
K24209LBS	1	102
K24209LIV	1	102
K24209PBR	1	102
K24209POC	1	102
K24209SAG	1	102
K24209TCO	1	102
K24209TIR	1	102
K24209WHI	1	102
K24210ABS	1	102
K24210BRC	1	102
K24210BSS	1	102
K24210DBZ	1	102
K24210LBK	1	102
K24210LBS	1	102
K24210LIV	1	102
K24210PBR	1	102
K24210POC	1	102
K24210SAG	1	102
K24210TCO	1	102
K24210TIR	1	102
K24210WHI	1	102
K24301ABS	1	107
K24301BRC	1	107
K24301BSS	1	107
K24301DBZ	1	107
K24301LBK	1	107
K24301LBS	1	107
K24301LIV	1	107
K24301PBR	1	107

LIST NO.	STD PACK	PAGE
K24301POC	1	107
K24301SAG	1	107
K24301TCO	1	107
K24301TIR	1	107
K24301WHI	1	107
K24305ABSB	1	106
K24305BRC	1	106
K24305BSS	1	106
K24305DBZB	1	106
K24305LBKB	1	106
K24305LBS	1	106
K24305LIVW	1	106
K24305PBR	1	106
K24305POC	1	106
K24305SAG	1	106
K24305TCOB	1	106
K24305TIRB	1	106
K24305WHIW	1	106
K24329ABS	1	128
K24329BRC	1	128
K24329BSS	1	128
K24329DBZ	1	128
K24329LBK	1	128
K24329LBS	1	128
K24329LIV	1	128
K24329PBR	1	128
K24329POC	1	128
K24329SAG	1	128
K24329TCO	1	128
K24329TIR	1	128
K24329WHI	1	128
K24330ABS	1	128
K24330BRC	1	128
K24330BSS	1	128
K24330DBZ	1	128
K24330LBK	1	128
K24330LBS	1	128
K24330LIV	1	128
K24330PBR	1	128
K24330POC	1	128
K24330SAG	1	128
K24330TCO	1	128
K24330TIR	1	128

Index

LIST NO.	STD PACK	PAGE
K24330WHI	1	128
K24331ABS	1	108
K24331BRC	1	108
K24331BSS	1	108
K24331DBZ	1	108
K24331LBK	1	108
K24331LBS	1	108
K24331LIV	1	108
K24331PBR	1	108
K24331POC	1	108
K24331SAG	1	108
K24331TCO	1	108
K24331TIR	1	108
K24331WHI	1	108
K24332ABS	1	108
K24332BRC	1	108
K24332BSS	1	108
K24332DBZ	1	108
K24332LBK	1	108
K24332LBS	1	108
K24332LIV	1	108
K24332PBR	1	108
K24332POC	1	108
K24332SAG	1	108
K24332TCO	1	108
K24332TIR	1	108
K24332WHI	1	108
K24333ABS	1	109
K24333BRC	1	109
K24333BSS	1	109
K24333DBZ	1	109
K24333LBK	1	109
K24333LBS	1	109
K24333LIV	1	109
K24333PBR	1	109
K24333POC	1	109
K24333SAG	1	109
K24333TCO	1	109
K24333TIR	1	109
K24333WHI	1	109
K24334ABS	1	109
K24334BRC	1	109
K24334BSS	1	109
K24334DBZ	1	109
K24334LBK	1	109

LIST NO.	STD PACK	PAGE
K24334LBS	1	109
K24334LIV	1	109
K24334PBR	1	109
K24334POC	1	109
K24334SAG	1	109
K24334TCO	1	109
K24334TIR	1	109
K24334WHI	1	109
K24336ABSB	1	107
K24336BRC	1	107
K24336BSS	1	107
K24336DBZB	1	107
K24336LBKB	1	107
K24336LBS	1	107
K24336LIVW	1	107
K24336PBR	1	107
K24336POC	1	107
K24336SAG	1	107
K24336TCOB	1	107
K24336TIRB	1	107
K24336WHIW	1	107
K24343ABSB	1	100
K24343BRC	1	100
K24343BSS	1	100
K24343DBZB	1	100
K24343LBKB	1	100
K24343LBS	1	100
K24343LIVW	1	100
K24343PBR	1	100
K24343POC	1	100
K24343SAG	1	100
K24343TCOB	1	100
K24343TIRB	1	100
K24343WHIW	1	100
K24346ABS	1	109
K24346BRC	1	109
K24346BSS	1	109
K24346DBZ	1	109
K24346LBK	1	109
K24346LBS	1	109
K24346LIV	1	109
K24346PBR	1	109
K24346POC	1	109
K24346SAG	1	109
K24346TCO	1	109
K24346TIR	1	109

LIST NO.	STD PACK	PAGE
K24346WHI	1	109
K24347ABSB	1	100
K24347BRC	1	100
K24347BSS	1	100
K24347DBZB	1	100
K24347LBKB	1	100
K24347LBS	1	100
K24347LIVW	1	100
K24347PBR	1	100
K24347POC	1	100
K24347SAG	1	100
K24347TCOB	1	100
K24347TIRB	1	100
K24347WHIW	1	100
K24348ABS	1	109
K24348BRC	1	109
K24348BSS	1	109
K24348DBZ	1	109
K24348LBK	1	109
K24348LBS	1	109
K24348LIV	1	109
K24348PBR	1	109
K24348POC	1	109
K24348SAG	1	109
K24348TCO	1	109
K24348TIR	1	109
K24348WHI	1	109
K24357ABSB	1	100
K24357BRC	1	100
K24357BSS	1	100
K24357DBZB	1	100
K24357LBKB	1	100
K24357LBS	1	100
K24357LIVW	1	100
K24357PBR	1	100
K24357POC	1	100
K24357SAG	1	100
K24357TCOB	1	100
K24357TIRB	1	100
K24357WHIW	1	100
K24371ABSB	1	105
K24371BRC	1	105
K24371BSS	1	105
K24371DBZB	1	105
K24371LBKB	1	105
K24371LBS	1	105

For product codes that contain a * please see the relevant product page for full details.

Index

LIST NO.	STD PACK	PAGE
K24371LIVW	1	105
K24371PBR	1	105
K24371POC	1	105
K24371SAG	1	105
K24371TCOB	1	105
K24371TIRB	1	105
K24371WHIW	1	105
K24372ABSB	1	105
K24372BRC	1	105
K24372BSS	1	105
K24372DBZB	1	105
K24372LBKB	1	105
K24372LBS	1	105
K24372LIVW	1	105
K24372PBR	1	105
K24372POC	1	105
K24372SAG	1	105
K24372TCOB	1	105
K24372TIRB	1	105
K24372WHIW	1	105
K24373ABSB	1	105
K24373BRC	1	105
K24373BSS	1	105
K24373DBZB	1	105
K24373LBKB	1	105
K24373LBS	1	105
K24373LIVW	1	105
K24373PBR	1	105
K24373POC	1	105
K24373SAG	1	105
K24373TCOB	1	105
K24373TIRB	1	105
K24373WHIW	1	105
K24381ABSB	1	103
K24381BRC	1	103
K24381BSS	1	103
K24381DBZB	1	103
K24381LBKB	1	103
K24381LBS	1	103
K24381LIVW	1	103
K24381PBR	1	103
K24381POC	1	103
K24381SAG	1	103
K24381TCOB	1	103
K24381TIRB	1	103
K24381WHIW	1	103

LIST NO.	STD PACK	PAGE
K24382ABSB	1	101
K24382BRC	1	101
K24382BSS	1	101
K24382DBZB	1	101
K24382LBKB	1	101
K24382LBS	1	101
K24382LIVW	1	101
K24382PBR	1	101
K24382POC	1	101
K24382SAG	1	101
K24382TCOB	1	101
K24382TIRB	1	101
K24382WHIW	1	101
K24383ABSB	1	101
K24383BRC	1	101
K24383BSS	1	101
K24383DBZB	1	101
K24383LBKB	1	101
K24383LBS	1	101
K24383LIVW	1	101
K24383PBR	1	101
K24383POC	1	101
K24383SAG	1	101
K24383TCOB	1	101
K24383TIRB	1	101
K24383WHIW	1	101
K24521ABS	1	108
K24521BRC	1	108
K24521BSS	1	108
K24521DBZ	1	108
K24521LBK	1	108
K24521LBS	1	108
K24521LIV	1	108
K24521PBR	1	108
K24521POC	1	108
K24521SAG	1	108
K24521TCO	1	108
K24521TIR	1	108
K24521WHI	1	108
K24522ABS	1	108
K24522BRC	1	108
K24522BSS	1	108
K24522DBZ	1	108
K24522LBK	1	108
K24522LBS	1	108
K24522LIV	1	108

LIST NO.	STD PACK	PAGE
K24522PBR	1	108
K24522POC	1	108
K24522SAG	1	108
K24522TCO	1	108
K24522TIR	1	108
K24522WHI	1	108
K24647ABSB	1	100
K24647BRC	1	100
K24647BSS	1	100
K24647DBZB	1	100
K24647LBKB	1	100
K24647LBS	1	100
K24647LIVW	1	100
K24647PBR	1	100
K24647POC	1	100
K24647SAG	1	100
K24647TCOB	1	100
K24647TIRB	1	100
K24647WHIW	1	100
K24657ABSB	1	100
K24657BRC	1	100
K24657BSS	1	100
K24657DBZB	1	100
K24657LBKB	1	100
K24657LBS	1	100
K24657LIVW	1	100
K24657PBR	1	100
K24657POC	1	100
K24657SAG	1	100
K24657TCOB	1	100
K24657TIRB	1	100
K24657WHIW	1	100
K24709ABSB	1	103
K24709BRC	1	103
K24709BSS	1	103
K24709DBZB	1	103
K24709LBKB	1	103
K24709LBS	1	103
K24709LIVW	1	103
K24709PBR	1	103
K24709POC	1	103
K24709SAG	1	103
K24709TCOB	1	103
K24709TIRB	1	103
K24709WHIW	1	103
K24780ABSB	1	103

Index

LIST NO.	STD PACK	PAGE
K24780BRC	1	103
K24780BSS	1	103
K24780DBZB	1	103
K24780LBKB	1	103
K24780LBS	1	103
K24780LIVW	1	103
K24780PBR	1	103
K24780POC	1	103
K24780SAG	1	103
K24780TCOB	1	103
K24780TIRB	1	103
K24780WHIW	1	103
K24781ABSB	1	103
K24781BRC	1	103
K24781BSS	1	103
K24781DBZB	1	103
K24781LBKB	1	103
K24781LBS	1	103
K24781LIVW	1	103
K24781PBR	1	103
K24781POC	1	103
K24781SAG	1	103
K24781TCOB	1	103
K24781TIRB	1	103
K24781WHIW	1	103
K24859ABSB	1	107
K24859BRC	1	107
K24859BSS	1	107
K24859DBZB	1	107
K24859LBKB	1	107
K24859LBS	1	107
K24859LIVW	1	107
K24859PBR	1	107
K24859POC	1	107
K24859SAG	1	107
K24859TCOB	1	107
K24859TIRB	1	107
K24859WHIW	1	107
K24941ABSB	1	104
K24941BRC	1	104
K24941BSS	1	104
K24941DBZB	1	104
K24941LBKB	1	104
K24941LBS	1	104
K24941LIVW	1	104
K24941PBR	1	104

LIST NO.	STD PACK	PAGE
K24941POC	1	104
K24941SAG	1	104
K24941TCOB	1	104
K24941TIRB	1	104
K24941WHIW	1	104
K24958ABSB	1	104
K24958BRC	1	104
K24958BSS	1	104
K24958DBZB	1	104
K24958LBKB	1	104
K24958LBS	1	104
K24958LIVW	1	104
K24958PBR	1	104
K24958POC	1	104
K24958SAG	1	104
K24958TCOB	1	104
K24958TIRB	1	104
K24958WHIW	1	104
K24961ABSB	1	104
K24961BRC	1	104
K24961BSS	1	104
K24961DBZB	1	104
K24961LBKB	1	104
K24961LBS	1	104
K24961LIVW	1	104
K24961PBR	1	104
K24961POC	1	104
K24961SAG	1	104
K24961TCOB	1	104
K24961TIRB	1	104
K24961WHIW	1	104
K24971ABSB	1	104
K24971BRC	1	104
K24971BSS	1	104
K24971DBZB	1	104
K24971LBKB	1	104
K24971LBS	1	104
K24971LIVW	1	104
K24971PBR	1	104
K24971POC	1	104
K24971SAG	1	104
K24971TCOB	1	104
K24971TIRB	1	104
K24971WHIW	1	104
K24978ABSB	1	105
K24978BRC	1	105

LIST NO.	STD PACK	PAGE
K24978BSS	1	105
K24978DBZB	1	105
K24978LBKB	1	105
K24978LBS	1	105
K24978LIVW	1	105
K24978PBR	1	105
K24978POC	1	105
K24978SAG	1	105
K24978TCOB	1	105
K24978TIRB	1	105
K24978WHIW	1	105
K33885DNDGIW	1	92
K33885DNDGPO	1	92
K33885DNDGPJ	1	92
K33885DNDGPS	1	92
K33885DNDMBB	1	92
K33885DNDMBS	1	92
K33885DNDMCI	1	92
K33885DNDMSP	1	92
K33885DNDMST	1	92
K33885DNDNBO	1	92
K33885DNDNCH	1	92
K33885DNDNOH	1	92
K33885DNDNDW	1	92
K33885DNDSBP	1	92
K33885DNDSCW	1	92
K33885DNDSNS	1	92
K33900DNDGIW	1	92
K33900DNDGPO	1	92
K33900DNDGPJ	1	92
K33900DNDGPS	1	92
K33900DNDMBB	1	92
K33900DNDMBS	1	92
K33900DNDMCI	1	92
K33900DNDMST	1	92
K33900DNDMSP	1	92
K33900DNDNBO	1	92
K33900DNDNCH	1	92
K33900DNDNDH	1	92
K33900DNDNDW	1	92
K33900DNDSBP	1	92
K33900DNDSCW	1	92
K33900DNDSNS	1	92
K34100GIW	1	78
K34100GPJ	1	78
K34100GPO	1	78

For product codes that contain a * please see the relevant product page for full details.

Index

LIST NO.	STD PACK	PAGE
K34100GPS	1	78
K34100MBB	1	78
K34100MBS	1	78
K34100MCI	1	78
K34100MSP	1	78
K34100MST	1	78
K34100NBO	1	78
K34100NCH	1	78
K34100NDH	1	78
K34100NDW	1	78
K34100SBP	1	78
K34100SCW	1	78
K34100SNS	1	78
K34101GIW	1	79
K34101GPJ	1	79
K34101GPO	1	79
K34101GPS	1	79
K34101MBB	1	79
K34101MBS	1	79
K34101MCI	1	79
K34101MSP	1	79
K34101MST	1	79
K34101NBO	1	79
K34101NCH	1	79
K34101NDH	1	79
K34101NDW	1	79
K34101SBP	1	79
K34101SCW	1	79
K34101SNS	1	79
K34102GIW	1	79
K34102GPJ	1	79
K34102GPO	1	79
K34102GPS	1	79
K34102MBB	1	79
K34102MBS	1	79
K34102MCI	1	79
K34102MSP	1	79
K34102MST	1	79
K34102NBO	1	79
K34102NCH	1	79
K34102NDH	1	79
K34102NDW	1	79
K34102SBP	1	79
K34102SCW	1	79
K34102SNS	1	79
K34103GIW	1	79

LIST NO.	STD PACK	PAGE
K34103GPJ	1	79
K34103GPO	1	79
K34103GPS	1	79
K34103MBB	1	79
K34103MBS	1	79
K34103MCI	1	79
K34103MSP	1	79
K34103MST	1	79
K34103NBO	1	79
K34103NCH	1	79
K34103NDH	1	79
K34103NDW	1	79
K34103SBP	1	79
K34103SCW	1	79
K34103SNS	1	79
K34104GIW	1	79
K34104GPJ	1	79
K34104GPO	1	79
K34104GPS	1	79
K34104MBB	1	79
K34104MBS	1	79
K34104MCI	1	79
K34104MSP	1	79
K34104MST	1	79
K34104NBO	1	79
K34104NCH	1	79
K34104NDH	1	79
K34104NDW	1	79
K34104SBP	1	79
K34104SCW	1	79
K34104SNS	1	79
K34105GIW	1	80
K34105GPJ	1	80
K34105GPO	1	80
K34105GPS	1	80
K34105MBB	1	80
K34105MBS	1	80
K34105MCI	1	80
K34105MSP	1	80
K34105MST	1	80
K34105NBO	1	80
K34105NCH	1	80
K34105NDH	1	80
K34105NDW	1	80
K34105SBP	1	80
K34105SCW	1	80

LIST NO.	STD PACK	PAGE
K34105SNS	1	80
K34206GIW	1	74
K34206GPJ	1	74
K34206GPO	1	74
K34206GPS	1	74
K34206MBB	1	74
K34206MBS	1	74
K34206MCI	1	74
K34206MSP	1	74
K34206MST	1	74
K34206NBO	1	74
K34206NCH	1	74
K34206NDH	1	74
K34206NDW	1	74
K34206SBP	1	74
K34206SCW	1	74
K34206SNS	1	74
K34207GIW	1	74
K34207GPJ	1	74
K34207GPO	1	74
K34207GPS	1	74
K34207MBB	1	74
K34207MBS	1	74
K34207MCI	1	74
K34207MSP	1	74
K34207MST	1	74
K34207NBO	1	74
K34207NCH	1	74
K34207NDH	1	74
K34207NDW	1	74
K34207SBP	1	74
K34207SCW	1	74
K34207SNS	1	74
K34208GIW	1	74
K34208GPJ	1	74
K34208GPO	1	74
K34208GPS	1	74
K34208MBB	1	74
K34208MBS	1	74
K34208MCI	1	74
K34208MSP	1	74
K34208MST	1	74
K34208NBO	1	74
K34208NCH	1	74
K34208NDH	1	74
K34208NDW	1	74

For product codes that contain a * please see the relevant product page for full details.

Index

LIST NO.	STD PACK	PAGE
K34208SBP	1	74
K34208SCW	1	74
K34208SNS	1	74
K34209GIW	1	75
K34209GPJ	1	75
K34209GPO	1	75
K34209GPS	1	75
K34209MBB	1	75
K34209MBS	1	75
K34209MCI	1	75
K34209MSP	1	75
K34209MST	1	75
K34209NBO	1	75
K34209NCH	1	75
K34209NDH	1	75
K34209NDW	1	75
K34209SBP	1	75
K34209SCW	1	75
K34209SNS	1	75
K34210GIW	1	75
K34210GPJ	1	75
K34210GPO	1	75
K34210GPS	1	75
K34210MBB	1	75
K34210MBS	1	75
K34210MCI	1	75
K34210MSP	1	75
K34210MST	1	75
K34210NBO	1	75
K34210NCH	1	75
K34210NDH	1	75
K34210NDW	1	75
K34210SBP	1	75
K34210SCW	1	75
K34210SNS	1	75
K34301GIW	1	80
K34301GPJ	1	80
K34301GPO	1	80
K34301GPS	1	80
K34301MBB	1	80
K34301MBS	1	80
K34301MCI	1	80
K34301MSP	1	80
K34301MST	1	80
K34301NBO	1	80
K34301NCH	1	80

LIST NO.	STD PACK	PAGE
K34301NDH	1	80
K34301NDW	1	80
K34301SBP	1	80
K34301SCW	1	80
K34301SNS	1	80
K34305GIW	1	76
K34305GPJ	1	76
K34305GPO	1	76
K34305GPS	1	76
K34305MBB	1	76
K34305MBS	1	76
K34305MCI	1	76
K34305MSP	1	76
K34305MST	1	76
K34305NBO	1	76
K34305NCH	1	76
K34305NDH	1	76
K34305NDW	1	76
K34305SBP	1	76
K34305SCW	1	76
K34305SNS	1	76
K34329GIW	1	97
K34329GPJ	1	97
K34329GPO	1	97
K34329GPS	1	97
K34329MBB	1	97
K34329MBS	1	97
K34329MCI	1	97
K34329MSP	1	97
K34329MST	1	97
K34329NBO	1	97
K34329NCH	1	97
K34329NDH	1	97
K34329NDW	1	97
K34329SBP	1	97
K34329SCW	1	97
K34329SNS	1	97
K34330GIW	1	97
K34330GPJ	1	97
K34330GPO	1	97
K34330GPS	1	97
K34330MBB	1	97
K34330MBS	1	97
K34330MCI	1	97
K34330MSP	1	97
K34330MST	1	97

LIST NO.	STD PACK	PAGE
K34330NBO	1	97
K34330NCH	1	97
K34330NDH	1	97
K34330NDW	1	97
K34330SBP	1	97
K34330SCW	1	97
K34330SNS	1	97
K34337CKGIW	1	77
K34337CKGPJ	1	77
K34337CKGPO	1	77
K34337CKGPS	1	77
K34337CKMBB	1	77
K34337CKMBS	1	77
K34337CKMCI	1	77
K34337CKMSP	1	77
K34337CKMST	1	77
K34337CKNBO	1	77
K34337CKNCH	1	77
K34337CKNDH	1	77
K34337CKNDW	1	77
K34337CKSBP	1	77
K34337CKSCW	1	77
K34337CKSNS	1	77
K34337GIW	1	77
K34337GPJ	1	77
K34337GPO	1	77
K34337GPS	1	77
K34337MBB	1	77
K34337MBS	1	77
K34337MCI	1	77
K34337MSP	1	77
K34337MST	1	77
K34337NBO	1	77
K34337NCH	1	77
K34337NCKGI	1	77
K34337NCKGP	1	77
K34337NCKMB	1	77
K34337NCKMC	1	77
K34337NCKMS	1	77
K34337NCKNB	1	77
K34337NCKNC	1	77
K34337NCKND	1	77
K34337NCKSB	1	77
K34337NCKSC	1	77
K34337NCKSN	1	77
K34337NDH	1	77

For product codes that contain a * please see the relevant product page for full details.

Index

LIST NO.	STD PACK	PAGE
K34337NDW	1	77
K34337NGIW	1	77
K34337NGPJ	1	77
K34337NGPO	1	77
K34337NGPS	1	77
K34337NMBB	1	77
K34337NMBS	1	77
K34337NMCI	1	77
K34337NMSP	1	77
K34337NMST	1	77
K34337NNBO	1	77
K34337NNCH	1	77
K34337NNDH	1	77
K34337NNDW	1	77
K34337NSBP	1	77
K34337NSCW	1	77
K34337NSNS	1	77
K34337SBP	1	77
K34337SCW	1	77
K34337SNS	1	77
K34343GIW	1	73
K34343GPJ	1	73
K34343GPO	1	73
K34343GPS	1	73
K34343MBB	1	73
K34343MBS	1	73
K34343MCI	1	73
K34343MSP	1	73
K34343MST	1	73
K34343NBO	1	73
K34343NCH	1	73
K34343NDH	1	73
K34343NDW	1	73
K34343SBP	1	73
K34343SCW	1	73
K34343SNS	1	73
K34347GIW	1	72
K34347GPJ	1	72
K34347GPO	1	72
K34347GPS	1	72
K34347MBB	1	72
K34347MBS	1	72
K34347MCI	1	72
K34347MSP	1	72
K34347MST	1	72
K34347NBO	1	72

LIST NO.	STD PACK	PAGE
K34347NCH	1	72
K34347NDH	1	72
K34347NDW	1	72
K34347NGIW	1	72
K34347NGPJ	1	72
K34347NGPO	1	72
K34347NGPS	1	72
K34347NMBB	1	72
K34347NMBS	1	72
K34347NMCI	1	72
K34347NMSP	1	72
K34347NMST	1	72
K34347NNBO	1	72
K34347NNCH	1	72
K34347NNDH	1	72
K34347NNDW	1	72
K34347NSBP	1	72
K34347NSCW	1	72
K34347NSNS	1	72
K34347SBP	1	72
K34347SCW	1	72
K34347SNS	1	72
K34357GIW	1	72
K34357GPJ	1	72
K34357GPO	1	72
K34357GPS	1	72
K34357MBB	1	72
K34357MBS	1	72
K34357MCI	1	72
K34357MSP	1	72
K34357MST	1	72
K34357NBO	1	72
K34357NCH	1	72
K34357NDH	1	72
K34357NDW	1	72
K34357NGIW	1	72
K34357NGPJ	1	72
K34357NGPO	1	72
K34357NGPS	1	72
K34357NMBB	1	72
K34357NMBS	1	72
K34357NMCI	1	72
K34357NMSP	1	72
K34357NMST	1	72
K34357NNBO	1	72
K34357NNCH	1	72

LIST NO.	STD PACK	PAGE
K34357NNDH	1	72
K34357NNDW	1	72
K34357NSBP	1	72
K34357NSCW	1	72
K34357NSNS	1	72
K34357SBP	1	72
K34357SCW	1	72
K34357SNS	1	72
K34370GIW	1	78
K34370GPJ	1	78
K34370GPO	1	78
K34370GPS	1	78
K34370MBB	1	78
K34370MBS	1	78
K34370MCI	1	78
K34370MSP	1	78
K34370MST	1	78
K34370NBO	1	78
K34370NCH	1	78
K34370NDH	1	78
K34370NDW	1	78
K34370SBP	1	78
K34370SCW	1	78
K34370SNS	1	78
K34371GIW	1	78
K34371GPJ	1	78
K34371GPO	1	78
K34371GPS	1	78
K34371MBB	1	78
K34371MBS	1	78
K34371MCI	1	78
K34371MSP	1	78
K34371MST	1	78
K34371NBO	1	78
K34371NCH	1	78
K34371NDH	1	78
K34371NDW	1	78
K34371SBP	1	78
K34371SCW	1	78
K34371SNS	1	78
K34372GIW	1	78
K34372GPJ	1	78
K34372GPO	1	78
K34372GPS	1	78
K34372MBB	1	78
K34372MBS	1	78

Index

LIST NO.	STD PACK	PAGE
K34372MCI	1	78
K34372MSP	1	78
K34372MST	1	78
K34372NBO	1	78
K34372NCH	1	78
K34372NDH	1	78
K34372NDW	1	78
K34372SBP	1	78
K34372SCW	1	78
K34372SNS	1	78
K34373GIW	1	92
K34373GPJ	1	92
K34373GPO	1	92
K34373GPS	1	92
K34373MBB	1	92
K34373MBS	1	92
K34373MCI	1	92
K34373MSP	1	92
K34373MST	1	92
K34373NBO	1	92
K34373NCH	1	92
K34373NDH	1	92
K34373NDW	1	92
K34373SBP	1	92
K34373SCW	1	92
K34373SNS	1	92
K34382GIW	1	73
K34382GPJ	1	73
K34382GPO	1	73
K34382GPS	1	73
K34382MBS	1	73
K34382MCI	1	73
K34382MSP	1	73
K34382MST	1	73
K34382NBO	1	73
K34382NCH	1	73
K34382NDH	1	73
K34382NDW	1	73
K34382SBP	1	73
K34382SCW	1	73
K34382SNS	1	73
K34499GIW	1	80
K34499GPJ	1	80
K34499GPO	1	80
K34499GPS	1	80
K34499MBB	1	80

LIST NO.	STD PACK	PAGE
K34499MBS	1	80
K34499MCI	1	80
K34499MSP	1	80
K34499MST	1	80
K34499NBO	1	80
K34499NCH	1	80
K34499NDH	1	80
K34499NDW	1	80
K34499SBP	1	80
K34499SCW	1	80
K34499SNS	1	80
K34522GIW	1	80
K34522GPJ	1	80
K34522GPO	1	80
K34522GPS	1	80
K34522MBB	1	80
K34522MBS	1	80
K34522MCI	1	80
K34522MSP	1	80
K34522MST	1	80
K34522NBO	1	80
K34522NCH	1	80
K34522NDH	1	80
K34522NDW	1	80
K34522SBP	1	80
K34522SCW	1	80
K34522SNS	1	80
K34547GIW	1	72
K34547GPJ	1	72
K34547GPO	1	72
K34547GPS	1	72
K34547MBB	1	72
K34547MBS	1	72
K34547MCI	1	72
K34547MSP	1	72
K34547MST	1	72
K34547NBO	1	72
K34547NCH	1	72
K34547NDH	1	72
K34547NDW	1	72
K34547NGIW	1	73
K34547NGPJ	1	73
K34547NGPO	1	73
K34547NGPS	1	73
K34547NMBB	1	73
K34547NMBS	1	73

LIST NO.	STD PACK	PAGE
K34547NMCI	1	73
K34547NMSP	1	73
K34547NMST	1	73
K34547NNBO	1	73
K34547NNCH	1	73
K34547NNDH	1	73
K34547NNDW	1	73
K34547NSBP	1	73
K34547NSCW	1	73
K34547NSNS	1	73
K34547SBP	1	72
K34547SCW	1	72
K34547SNS	1	72
K34709GIW	1	75
K34709GPJ	1	75
K34709GPO	1	75
K34709GPS	1	75
K34709MBB	1	75
K34709MBS	1	75
K34709MCI	1	75
K34709MSP	1	75
K34709MST	1	75
K34709NBO	1	75
K34709NCH	1	75
K34709NDH	1	75
K34709NDW	1	75
K34709SBP	1	75
K34709SCW	1	75
K34709SNS	1	75
K34780GIW	1	73
K34780GPJ	1	73
K34780GPO	1	73
K34780GPS	1	73
K34780MBB	1	73
K34780MBS	1	73
K34780MCI	1	73
K34780MSP	1	73
K34780MST	1	73
K34780NBO	1	73
K34780NCH	1	73
K34780NDH	1	73
K34780NDW	1	73
K34780SBP	1	73
K34780SCW	1	73
K34780SNS	1	73
K34859GIW	1	77

For product codes that contain a * please see the relevant product page for full details.

Index

LIST NO.	STD PACK	PAGE
K34859GPJ	1	77
K34859GPO	1	77
K34859GPS	1	77
K34859MBB	1	77
K34859MBS	1	77
K34859MCI	1	77
K34859MSP	1	77
K34859MST	1	77
K34859NBO	1	77
K34859NCH	1	77
K34859NDH	1	77
K34859NDW	1	77
K34859SBP	1	77
K34859SCW	1	77
K34859SNS	1	77
K34880BLK	1	89
K34880SBP	1	89
K34880SCW	1	89
K34880SNS	1	89
K34881BLK	1	81
K34881NBLK	1	81
K34881NSBP	1	81
K34881NSCW	1	81
K34881NSNS	1	81
K34881SBP	1	81
K34881SCW	1	81
K34881SNS	1	81
K34882BLK	1	82
K34882NBLK	1	82
K34882NSBP	1	82
K34882NSCW	1	82
K34882NSNS	1	82
K34882SBP	1	82
K34882SCW	1	82
K34882SNS	1	82
K34885BBLK	1	84
K34885BLK	1	84
K34885BSBP	1	84
K34885BSCW	1	84
K34885BSNS	1	84
K34885SBP	1	84
K34885SCW	1	84
K34885SNS	1	84
K34890BLK	1	89
K34890SBP	1	89
K34890SCW	1	89

LIST NO.	STD PACK	PAGE
K34890SNS	1	89
K34891BLK	1	85
K34891NBLK	1	85
K34891NSBP	1	85
K34891NSCW	1	85
K34891NSNS	1	85
K34891SBP	1	85
K34891SCW	1	85
K34891SNS	1	85
K34892BLK	1	86
K34892NBLK	1	86
K34892NSBP	1	86
K34892NSCW	1	86
K34892NSNS	1	86
K34892SBP	1	86
K34892SCW	1	86
K34892SNS	1	86
K34894BLK	1	87
K34894NBLK	1	87
K34894NSBP	1	87
K34894NSCW	1	87
K34894NSNS	1	87
K34894SBP	1	87
K34894SCW	1	87
K34894SNS	1	87
K34896BLK	1	88
K34896NBLK	1	88
K34896NSBP	1	88
K34896NSCW	1	88
K34896NSNS	1	88
K34896SBP	1	88
K34896SCW	1	88
K34896SNS	1	88
K34900BLK	1	85
K34900SBP	1	85
K34900SCW	1	85
K34900SNS	1	85
K34901BLK	1	85
K34901SBP	1	85
K34901SCW	1	85
K34901SNS	1	85
K34910BLK	1	83
K34910SBP	1	83
K34910SCW	1	83
K34910SNS	1	83
K34911BLK	1	83

LIST NO.	STD PACK	PAGE
K34911SBP	1	83
K34911SCW	1	83
K34911SNS	1	83
K34941GIW	1	76
K34941GPJ	1	76
K34941GPO	1	76
K34941GPS	1	76
K34941MBB	1	76
K34941MBS	1	76
K34941MCI	1	76
K34941MSP	1	76
K34941MST	1	76
K34941NBO	1	76
K34941NCH	1	76
K34941NDH	1	76
K34941NDW	1	76
K34941SBP	1	76
K34941SCW	1	76
K34941SNS	1	76
K34971GIW	1	76
K34971GPJ	1	76
K34971GPO	1	76
K34971GPS	1	76
K34971MBB	1	76
K34971MBS	1	76
K34971MCI	1	76
K34971MSP	1	76
K34971MST	1	76
K34971NBO	1	76
K34971NCH	1	76
K34971NDH	1	76
K34971NDW	1	76
K34971SBP	1	76
K34971SCW	1	76
K34971SNS	1	76
K34978GIW	1	76
K34978GPJ	1	76
K34978GPO	1	76
K34978GPS	1	76
K34978MBB	1	76
K34978MBS	1	76
K34337CKNCH	1	77
K34337CKNDH	1	77
K34337CKNDW	1	77
K34337CKSBP	1	77
K34337CKSCW	1	77

For product codes that contain a * please see the relevant product page for full details.

Index

LIST NO.	STD PACK	PAGE
K34337CKSNS	1	77
K34337GIW	1	77
K34337GPJ	1	77
K34337GPO	1	77
K34337GPS	1	77
K34337MBB	1	77
K34337MBS	1	77
K34337MCI	1	77
K34337MSP	1	77
K34337MST	1	77
K34337NBO	1	77
K34337NCH	1	77
K34337NCKGI	1	77
K34337NCKGP	1	77
K34337NCKMB	1	77
K34337NCKMC	1	77
K34337NCKMS	1	77
K34337NCKNB	1	77
K34337NCKNC	1	77
K34337NCKND	1	77
K34337NCKSB	1	77
K34337NCKSC	1	77
K34337NCKSN	1	77
K34337NDH	1	77
K34337NDW	1	77
K34337NGIW	1	77
K34337NGPJ	1	77
K34337NGPO	1	77
K34337NGPS	1	77
K34337NMBB	1	77
K34337NMBS	1	77
K34337NMCI	1	77
K34337NMSP	1	77
K34337NMST	1	77
K34337NNBO	1	77
K34337NNCH	1	77
K34337NNDH	1	77
K34337NNDW	1	77
K34337NSBP	1	77
K34337NSCW	1	77
K34337NSNS	1	77
K34337SBP	1	77
K34337SCW	1	77
K34337SNS	1	77
K34343GIW	1	73
K34343GPJ	1	73

LIST NO.	STD PACK	PAGE
K34343GPO	1	73
K34343GPS	1	73
K34343MBB	1	73
K34343MBS	1	73
K34343MCI	1	73
K34343MSP	1	73
K34343MST	1	73
K34343NBO	1	73
K34343NCH	1	73
K34343NDH	1	73
K34343NDW	1	73
K34343SBP	1	73
K34343SCW	1	73
K34343SNS	1	73
K34347GIW	1	72
K34347GPJ	1	72
K34347GPO	1	72
K34347GPS	1	72
K34347MBB	1	72
K34347MBS	1	72
K34347MCI	1	72
K34347MSP	1	72
K34347MST	1	72
K34347NBO	1	72
K34347NCH	1	72
K34347NDH	1	72
K34347NDW	1	72
K34347NGIW	1	72
K34347NGPJ	1	72
K34347NGPO	1	72
K34347NGPS	1	72
K34347NMBB	1	72
K34347NMBS	1	72
K34347NMCI	1	72
K34347NMSP	1	72
K34347NMST	1	72
K34347NNBO	1	72
K34347NNCH	1	72
K34347NNDH	1	72
K34347NNDW	1	72
K34347NSBP	1	72
K34347NSCW	1	72
K34347NSNS	1	72
K34347SBP	1	72
K34347SCW	1	72
K34347SNS	1	72

LIST NO.	STD PACK	PAGE
K34357GIW	1	72
K34357GPJ	1	72
K34357GPO	1	72
K34357GPS	1	72
K34357MBB	1	72
K34357MBS	1	72
K34357MCI	1	72
K34357MSP	1	72
K34357MST	1	72
K34357NBO	1	72
K34357NCH	1	72
K34357NDH	1	72
K34357NDW	1	72
K34357NGIW	1	72
K34357NGPJ	1	72
K34357NGPO	1	72
K34357NGPS	1	72
K34357NMBB	1	72
K34357NMBS	1	72
K34357NMCI	1	72
K34357NMSP	1	72
K34357NMST	1	72
K34357NNBO	1	72
K34357NNCH	1	72
K34357NNDH	1	72
K34357NNDW	1	72
K34357NSBP	1	72
K34357NSCW	1	72
K34357NSNS	1	72
K34357SBP	1	72
K34357SCW	1	72
K34357SNS	1	72
K34370GIW	1	78
K34370GPJ	1	78
K34370GPO	1	78
K34370GPS	1	78
K34370MBB	1	78
K34370MBS	1	78
K34370MCI	1	78
K34370MSP	1	78
K34370MST	1	78
K34370NBO	1	78
K34370NCH	1	78
K34370NDH	1	78
K34370NDW	1	78
K34370SBP	1	78

For product codes that contain a * please see the relevant product page for full details.

Index

LIST NO.	STD PACK	PAGE
K34370SCW	1	78
K34370SNS	1	78
K34371GIW	1	78
K34371GPJ	1	78
K34371GPO	1	78
K34371GPS	1	78
K34371MBB	1	78
K34371MBS	1	78
K34371MCI	1	78
K34371MSP	1	78
K34371MST	1	78
K34371NBO	1	78
K34371NCH	1	78
K34371NDH	1	78
K34371NDW	1	78
K34371SBP	1	78
K34371SCW	1	78
K34371SNS	1	78
K34372GIW	1	78
K34372GPJ	1	78
K34372GPO	1	78
K34372GPS	1	78
K34372MBB	1	78
K34372MBS	1	78
K34372MCI	1	78
K34372MSP	1	78
K34372MST	1	78
K34372NBO	1	78
K34372NCH	1	78
K34372NDH	1	78
K34372NDW	1	78
K34372SBP	1	78
K34372SCW	1	78
K34372SNS	1	78
K34373GIW	1	92
K34373GPJ	1	92
K34373GPO	1	92
K34373GPS	1	92
K34373MBB	1	92
K34373MBS	1	92
K34373MCI	1	92
K34373MSP	1	92
K34373MST	1	92
K34373NBO	1	92
K34373NCH	1	92
K34373NDH	1	92

LIST NO.	STD PACK	PAGE
K34373NDW	1	92
K34373SBP	1	92
K34373SCW	1	92
K34373SNS	1	92
K34382GIW	1	73
K34382GPJ	1	73
K34382GPO	1	73
K34382GPS	1	73
K34382MBS	1	73
K34382MCI	1	73
K34382MSP	1	73
K34382MST	1	73
K34382NBO	1	73
K34382NCH	1	73
K34382NDH	1	73
K34382NDW	1	73
K34382SBP	1	73
K34382SCW	1	73
K34382SNS	1	73
K34499GIW	1	80
K34499GPJ	1	80
K34499GPO	1	80
K34499GPS	1	80
K34499MBB	1	80
K34499MBS	1	80
K34499MCI	1	80
K34499MSP	1	80
K34499MST	1	80
K34499NBO	1	80
K34499NCH	1	80
K34499NDH	1	80
K34499NDW	1	80
K34499SBP	1	80
K34499SCW	1	80
K34499SNS	1	80
K34522GIW	1	80
K34522GPJ	1	80
K34522GPO	1	80
K34522GPS	1	80
K34522MBB	1	80
K34522MBS	1	80
K34522MCI	1	80
K34522MSP	1	80
K34522MST	1	80
K34522NBO	1	80
K34522NCH	1	80

LIST NO.	STD PACK	PAGE
K34522NDH	1	80
K34522NDW	1	80
K34522SBP	1	80
K34522SCW	1	80
K34522SNS	1	80
K34547GIW	1	72
K34547GPJ	1	72
K34547GPO	1	72
K34547GPS	1	72
K34547MBB	1	72
K34547MBS	1	72
K34547MCI	1	72
K34547MSP	1	72
K34547MST	1	72
K34547NBO	1	72
K34547NCH	1	72
K34547NDH	1	72
K34547NDW	1	72
K34547NGIW	1	73
K34547NGPJ	1	73
K34547NGPO	1	73
K34547NGPS	1	73
K34547NMBB	1	73
K34547NMBS	1	73
K34547NMCI	1	73
K34547NMSP	1	73
K34547NMST	1	73
K34547NNBO	1	73
K34547NNCH	1	73
K34547NNDH	1	73
K34547NNDW	1	73
K34547NSBP	1	73
K34547NSCW	1	73
K34547NSNS	1	73
K34547SBP	1	72
K34547SCW	1	72
K34547SNS	1	72
K34709GIW	1	75
K34709GPJ	1	75
K34709GPO	1	75
K34709GPS	1	75
K34709MBB	1	75
K34709MBS	1	75
K34709MCI	1	75
K34709MSP	1	75
K34709MST	1	75

Index

LIST NO.	STD PACK	PAGE
K34709NBO	1	75
K34709NCH	1	75
K34709NDH	1	75
K34709NDW	1	75
K34709SBP	1	75
K34709SCW	1	75
K34709SNS	1	75
K34780GIW	1	73
K34780GPJ	1	73
K34780GPO	1	73
K34780GPS	1	73
K34780MBB	1	73
K34780MBS	1	73
K34780MCI	1	73
K34780MSP	1	73
K34780MST	1	73
K34780NBO	1	73
K34780NCH	1	73
K34780NDH	1	73
K34780NDW	1	73
K34780SBP	1	73
K34780SCW	1	73
K34780SNS	1	73
K34859GIW	1	77
K34859GPJ	1	77
K34859GPO	1	77
K34859GPS	1	77
K34859MBB	1	77
K34859MBS	1	77
K34859MCI	1	77
K34859MSP	1	77
K34859MST	1	77
K34859NBO	1	77
K34859NCH	1	77
K34859NDH	1	77
K34859NDW	1	77
K34859SBP	1	77
K34859SCW	1	77
K34859SNS	1	77
K34880BLK	1	89
K34880SBP	1	89
K34880SCW	1	89
K34880SNS	1	89
K34881BLK	1	81
K34881NBLK	1	81
K34881NSBP	1	81

LIST NO.	STD PACK	PAGE
K34881NSCW	1	81
K34881NSNS	1	81
K34881SBP	1	81
K34881SCW	1	81
K34881SNS	1	81
K34882BLK	1	82
K34882NBLK	1	82
K34882NSBP	1	82
K34882NSCW	1	82
K34882NSNS	1	82
K34882SBP	1	82
K34882SCW	1	82
K34882SNS	1	82
K34885BBLK	1	84
K34885BLK	1	84
K34885BSBP	1	84
K34885BSCW	1	84
K34885BSNS	1	84
K34885SBP	1	84
K34885SCW	1	84
K34885SNS	1	84
K34890BLK	1	89
K34890SBP	1	89
K34890SCW	1	89
K34890SNS	1	89
K34891BLK	1	85
K34891NBLK	1	85
K34891NSBP	1	85
K34891NSCW	1	85
K34891NSNS	1	85
K34891SBP	1	85
K34891SCW	1	85
K34891SNS	1	85
K34892BLK	1	86
K34892NBLK	1	86
K34892NSBP	1	86
K34892NSCW	1	86
K34892NSNS	1	86
K34892SBP	1	86
K34892SCW	1	86
K34892SNS	1	86
K34894BLK	1	87
K34894NBLK	1	87
K34894NSBP	1	87
K34894NSCW	1	87
K34894NSNS	1	87

LIST NO.	STD PACK	PAGE
K34894SBP	1	87
K34894SCW	1	87
K34894SNS	1	87
K34896BLK	1	88
K34896NBLK	1	88
K34896NSBP	1	88
K34896NSCW	1	88
K34896NSNS	1	88
K34896SBP	1	88
K34896SCW	1	88
K34896SNS	1	88
K34900BLK	1	85
K34900SBP	1	85
K34900SCW	1	85
K34900SNS	1	85
K34901BLK	1	85
K34901SBP	1	85
K34901SCW	1	85
K34901SNS	1	85
K34910BLK	1	83
K34910SBP	1	83
K34910SCW	1	83
K34910SNS	1	83
K34911BLK	1	83
K34911SBP	1	83
K34911SCW	1	83
K34911SNS	1	83
K34941GIW	1	76
K34941GPJ	1	76
K34941GPO	1	76
K34941GPS	1	76
K34941MBB	1	76
K34941MBS	1	76
K34941MCI	1	76
K34941MSP	1	76
K34941MST	1	76
K34941NBO	1	76
K34941NCH	1	76
K34941NDH	1	76
K34941NDW	1	76
K34941SBP	1	76
K34941SCW	1	76
K34941SNS	1	76
K34971GIW	1	76
K34971GPJ	1	76
K34971GPO	1	76

For product codes that contain a * please see the relevant product page for full details.

Index

LIST NO.	STD PACK	PAGE
K34971GPS	1	76
K34971MBB	1	76
K34971MBS	1	76
K34971MCI	1	76
K34971MSP	1	76
K34971MST	1	76
K34971NBO	1	76
K34971NCH	1	76
K34971NDH	1	76
K34971NDW	1	76
K34971SBP	1	76
K34971SCW	1	76
K34971SNS	1	76
K34978GIW	1	76
K34978GPJ	1	76
K34978GPO	1	76
K34978GPS	1	76
K34978MBB	1	76
K34978MBS	1	76
K34978MCI	1	76
K34978MSP	1	76
K34978MST	1	76
K34978NBO	1	76
K34978NCH	1	76
K34978NDH	1	76
K34978NDW	1	76
K34978SBP	1	76
K34978SCW	1	76
K34978SNS	1	76
K34981BLK	1	82
K34981NBLK	1	82
K34981NSBP	1	82
K34981NSCW	1	82
K34981NSNS	1	82
K34981SBP	1	82
K34981SCW	1	82
K34981SNS	1	82
K34982BLK	1	83
K34982NBLK	1	83
K34982NSBP	1	83
K34982NSCW	1	83
K34982NSNS	1	83
K34982SBP	1	83
K34982SCW	1	83
K34982SNS	1	83
K34985BBLK	1	84

LIST NO.	STD PACK	PAGE
K34985BLK	1	84
K34985BSBP	1	84
K34985BSCW	1	84
K34985BSNS	1	84
K34985SBP	1	84
K34985SCW	1	84
K34985SNS	1	84
K34991BLK	1	86
K34991NBLK	1	86
K34991NSBP	1	86
K34991NSCW	1	86
K34991NSNS	1	86
K34991SBP	1	86
K34991SCW	1	86
K34991SNS	1	86
K34992BLK	1	87
K34992NBLK	1	87, 89
K34992NSBP	1	87, 89
K34992NSCW	1	87, 89
K34992NSNS	1	87, 89
K34992SBP	1	87
K34992SCW	1	87
K34992SNS	1	87
K34993BLK	1	85
K34993SBP	1	85
K34993SCW	1	85
K34993SNS	1	85
K34994NBLK	1	88
K34994NSBP	1	88
K34994NSCW	1	88
K34994NSNS	1	88
K34996BLK	1	88
K34996SBP	1	88
K34996SCW	1	88
K34996SNS	1	88
K35111GIW	1	90
K35111GPJ	1	90
K35111GPO	1	90
K35111GPS	1	90
K35111MBB	1	90
K35111MBS	1	90
K35111MCI	1	90
K35111MSP	1	90
K35111MST	1	90
K35111NBO	1	90
K35111NCH	1	90

LIST NO.	STD PACK	PAGE
K35111NDH	1	90
K35111NDW	1	90
K35111SBP	1	90
K35111SCW	1	90
K35111SNS	1	90
K35112GIW	1	90
K35112GPJ	1	90
K35112GPO	1	90
K35112GPS	1	90
K35112MBB	1	90
K35112MBS	1	90
K35112MCI	1	90
K35112MSP	1	90
K35112MST	1	90
K35112NBO	1	90
K35112NCH	1	90
K35112NDH	1	90
K35112NDW	1	90
K35112SBP	1	90
K35112SCW	1	90
K35112SNS	1	90
K35114GIW	1	90
K35114GPJ	1	90
K35114GPO	1	90
K35114GPS	1	90
K35114MBB	1	90
K35114MBS	1	90
K35114MCI	1	90
K35114MSP	1	90
K35114MST	1	90
K35114NBO	1	90
K35114NCH	1	90
K35114NDH	1	90
K35114NDW	1	90
K35114SBP	1	90
K35114SCW	1	90
K35114SNS	1	90
K35131GIW	1	80
K35131GPJ	1	80
K35131GPO	1	80
K35131GPS	1	80
K35131MBB	1	80
K35131MBS	1	80
K35131MCI	1	80
K35131MSP	1	80
K35131MST	1	80

Index

LIST NO.	STD PACK	PAGE
K35131NBO	1	80
K35131NCH	1	80
K35131NDH	1	80
K35131NDW	1	80
K35131SBP	1	80
K35131SCW	1	80
K35131SNS	1	80
K35132GIW	1	81
K35132GPJ	1	81
K35132GPO	1	81
K35132GPS	1	81
K35132MBB	1	81
K35132MBS	1	81
K35132MCI	1	81
K35132MSP	1	81
K35132MST	1	81
K35132NBO	1	81
K35132NCH	1	81
K35132NDH	1	81
K35132NDW	1	81
K35132SBP	1	81
K35132SCW	1	81
K35132SNS	1	81
K35133GIW	1	81
K35133GPJ	1	81
K35133GPO	1	81
K35133GPS	1	81
K35133MBB	1	81
K35133MBS	1	81
K35133MCI	1	81
K35133MSP	1	81
K35133MST	1	81
K35133NBO	1	81
K35133NCH	1	81
K35133NDH	1	81
K35133NDW	1	81
K35133SBP	1	81
K35133SCW	1	81
K35133SNS	1	81
K35134GIW	1	81
K35134GPJ	1	81
K35134GPO	1	81
K35134GPS	1	81

LIST NO.	STD PACK	PAGE
K35134MBB	1	81
K35134MBS	1	81
K35134MCI	1	81
K35134MSP	1	81
K35134MST	1	81
K35134NBO	1	81
K35134NCH	1	81
K35134NDH	1	81
K35134NDW	1	81
K35134SBP	1	81
K35134SCW	1	81
K35134SNS	1	81
K35201GIW	1	92
K35201GPJ	1	92
K35201GPO	1	92
K35201GPS	1	92
K35201MBB	1	92
K35201MBS	1	92
K35201MCI	1	92
K35201MSP	1	92
K35201MST	1	92
K35201NBO	1	92
K35201NCH	1	92
K35201NDH	1	92
K35201NDW	1	92
K35201SBP	1	92
K35201SCW	1	92
K35201SNS	1	92
K35202GIW	1	92
K35202GPJ	1	92
K35202GPO	1	92
K35202GPS	1	92
K35202MBB	1	92
K35202MBS	1	92
K35202MCI	1	92
K35202MSP	1	92
K35202MST	1	92
K35202NBO	1	92
K35202NCH	1	92
K35202NDH	1	92
K35202NDW	1	92
K35202SBP	1	92
K35202SCW	1	92

LIST NO.	STD PACK	PAGE
K35202SNS	1	92
K35203GIW	1	92
K35203GPJ	1	92
K35203GPO	1	92
K35203GPS	1	92
K35203MBB	1	92
K35203MBS	1	92
K35203MCI	1	92
K35203MSP	1	92
K35203MST	1	92
K35203NBO	1	92
K35203NCH	1	92
K35203NDH	1	92
K35203NDW	1	92
K35203SBP	1	92
K35203SCW	1	92
K35203SNS	1	92
K35206GIW	1	91
K35206GPJ	1	91
K35206GPO	1	91
K35206GPS	1	91
K35206MBB	1	91
K35206MBS	1	91
K35206MCI	1	91
K35206MSP	1	91
K35206MST	1	91
K35206NBO	1	91
K35206NCH	1	91
K35206NDH	1	91
K35206NDW	1	91
K35206SBP	1	91
K35206SCW	1	91
K35206SNS	1	91
K35207GIW	1	91
K35207GPJ	1	91
K35207GPO	1	91
K35207GPS	1	91
K35207MBB	1	91
K35207MBS	1	91
K35207MCI	1	91
K35207MSP	1	91
K35207MST	1	91
K35207NBO	1	91

For product codes that contain a * please see the relevant product page for full details.

Index

LIST NO.	STD PACK	PAGE
K35207NCH	1	91
K35207NDH	1	91
K35207NDW	1	91
K35207SBP	1	91
K35207SCW	1	91
K35207SNS	1	91
K35208GIW	1	90
K35208GPJ	1	90
K35208GPO	1	90
K35208GPS	1	90
K35208MBB	1	90
K35208MBS	1	90
K35208MCI	1	90
K35208MSP	1	90
K35208MST	1	90
K35208NBO	1	90
K35208NCH	1	90
K35208NDH	1	90
K35208NDW	1	90
K35208SBP	1	90
K35208SCW	1	90
K35208SNS	1	90
K35209GIW	1	91
K35209GPJ	1	91
K35209GPO	1	91
K35209GPS	1	91
K35209MBB	1	91
K35209MBS	1	91
K35209MCI	1	91
K35209MSP	1	91
K35209MST	1	91
K35209NBO	1	91
K35209NCH	1	91
K35209NDH	1	91
K35209NDW	1	91
K35209SBP	1	91
K35209SCW	1	91
K35209SNS	1	91
K55000BLK	1	31, 249
K55000GRY	1	31, 249
K55000WHI	1	31, 249
K55400BLK	1	28, 249
K55400GRY	1	28, 249

LIST NO.	STD PACK	PAGE
K55400WHI	1	28, 249
K55406BLK	1	28, 249
K55406GRY	1	28, 249
K55406WHI	1	28, 249
K56231BLK	1	245, 289
K56231GRY	1	245, 289
K56231WHI	1	245, 289
K56233BLK	1	245, 289
K56233GRY	1	245, 289
K56233WHI	1	245, 289
K56301BLK	1	245, 289
K56301GRY	1	245, 289
K56301WHI	1	245, 289
K56400BLK	1	246
K56400GRY	1	246
K56400WHI	1	246
K56401BLK	1	246
K56401GRY	1	246
K56401WHI	1	246
K56402BLK	1	246
K56402GRY	1	246
K56402WHI	1	246
K56406BLK	1	246
K56406GRY	1	246
K56406WHI	1	246
K56407BLK	1	246
K56407GRY	1	246
K56407WHI	1	246
K56408BLK	1	246
K56408GRY	1	246
K56408WHI	1	246
K56409BLK	1	246
K56409GRY	1	246
K56409WHI	1	246
K56410BLK	1	246
K56410GRY	1	246
K56410WHI	1	246
K56414BLK	1	246
K56414GRY	1	246
K56414WHI	1	246
K56420BLK	1	247
K56420GRY	1	247
K56420WHI	1	247

LIST NO.	STD PACK	PAGE
K56421BLK	1	247
K56421GRY	1	247
K56421WHI	1	247
K56422BLK	1	247
K56422GRY	1	247
K56422WHI	1	247
K56423BLK	1	247
K56423GRY	1	247
K56423WHI	1	247
K56425BLK	1	246
K56425GRY	1	246
K56425WHI	1	246
K56480BLK	1	245
K56480GRY	1	245
K56480WHI	1	245
K56481BLK	1	245
K56481GRY	1	245
K56481WHI	1	245
K56482BLK	1	245
K56482GRY	1	245
K56482WHI	1	245
K56483BLK	1	245
K56483GRY	1	245
K56483WHI	1	245
K56485BLK	1	245
K56485GRY	1	245
K56485WHI	1	245
K56486BLK	1	245
K56486GRY	1	245
K56486WHI	1	245
K56487BLK	1	245
K56487GRY	1	245
K56487WHI	1	245
K56488BLK	1	245
K56488GRY	1	245
K56488WHI	1	245
K56500GRY	1	248
K56500WHI	1	248
K56501GRY	1	248
K56501WHI	1	248
K56502GRY	1	248
K56502WHI	1	248
K56503GRY	1	248

For product codes that contain a * please see the relevant product page for full details.

Index

LIST NO.	STD PACK	PAGE
K56503WHI	1	248
K56506BLK	1	248
K56506GRY	1	248
K56506WHI	1	248
K73143YEL	1	266
K73173YEL	1	266
K73174BLU	1	266
K73310BLU	1	266
K73353RED	1	267
K73414BLU	1	266
K73435RED	1	266
K73463BLU	1	266
K73465RED	1	266
K73600YEL	1	257
K73601BLU	1	259
K73615RED	1	261
K73623YEL	1	257
K73624BLU	1	259
K73626RED	1	260
K73633BLU	1	259
K73641RED	1	261
K73643RED	1	261
K73654BLU	1	259
K73656RED	1	260
K73658RED	1	260
K73714BLU	1	267
K73718YEL	1	267
K73735RED	1	267
KA – KZ		
KAX26s	10	286
KPAD	1	31
L		
LB42053	1	428
LB42054	1	428
LB42055	1	428
LB42056	1	428
LB42056GRY	1	428
LB44053	1	428
LB44054	1	428
LB44055	1	428
LB44056	1	428

LIST NO.	STD PACK	PAGE
LB44056GRY	1	428
LCP102BLK	10	239
LCP102ORG	10	239
LCP102PBLK	10	239
LCP102PORG	10	239
LCP102SBLK	10	239
LCP102SORG	10	239
LCP103BLK	10	239
LCP103PBLK	10	239
LCP103PWHI	10	239
LCP103SBLK	10	239
LCP103SWHI	10	239
LCP103WHI	10	239
LF43	1	428
LF43 LH	1	428
LF44	1	428
LF44 LH	1	428
LF45	1	428
LF45 LH	1	428
LF46	1	428
LF46 LH	1	428
LF46GRY	1	428
LF46GRY LH	1	428
LI4310	1	428
LI4330	1	428
LI4410	1	428
LI4430	1	428
LI4510	1	428
LI4530	1	428
LI4610	1	428
LI4610GRY	1	428
LI4630	1	428
LI4630GRY	1	428
LJU6C	1	399
LNB1WHI	25	351
LNB2WHI	100	351
LNB3WHI	50	351
LNB4WHI	50	351
LNB5WHI	25	351
LNB6WHI	25	351
LT11601C	1	429
LT11601GRY	1	429

LIST NO.	STD PACK	PAGE
LT11602C	1	429
LT11603C	1	429
LT11621C	1	429
LT11622C	1	429
LT11623C	1	429
LT11625GRY	1	429
LT12501C	1	429
LT12501GRY	1	429
LT12502C	1	429
LT12503C	1	429
LT12504C	1	429
LT12505C	1	429
LT12506C	1	429
LT12521C	1	429
LT12522C	1	429
LT12523C	1	429
LT12525GRY	1	429
LT12526GRY	1	429
LT31601C	1	429
LT31601GRY	1	429
LT31602C	1	429
LT31603C	1	429
LT31621C	1	429
LT31622C	1	429
LT31623C	1	429
LT31625GRY	1	429
LT32501C	1	429
LT32501GRY	1	429
LT32502C	1	429
LT32503C	1	429
LT32504C	1	429
LT32505C	1	429
LT32506C	1	429
LT32521C	1	429
LT32522C	1	429
LT32523C	1	429
LT32525GRY	1	429
LT32526GRY	1	429
LT51601C	1	429
LT51601GRY	1	429
LT51602C	1	429
LT51603C	1	429

For product codes that contain a * please see the relevant product page for full details.

Index

LIST NO.	STD PACK	PAGE
LT51621C	1	429
LT51622C	1	429
LT51623C	1	429
LT51625GRY	1	429
LT52501C	1	429
LT52501GRY	1	429
LT52502C	1	429
LT52503C	1	429
LT52504C	1	429
LT52505C	1	429
LT52521C	1	429
LT52522C	1	429
LT52523C	1	429
LT52525GRY	1	429
LT52526GRY	1	429

M

M4X10SS	100	356
M4413	1	253
M4414	1	253
M4417	1	253
M4418	1	253
MAB1	5	356
MAB2	5	356
MAB3	5	356
MAB4	5	356
MAB5	5	356
MAB6	5	356
MAB7	2	356
MEC2	100	351
MEC3	50	351
MEC4WHI	25	351
MK9933	1	248, 253, 262
MK9934	5	262
MK9937	5	262
MPB2	100	353
MPB3	100	353

N

NAE3TCWHI	1	345
NAE3WHI	1	345
NAE4TCWHI	1	345
NAE4WHI	1	345
NAE1010WHI*	1	340
NAE1040WHI	2	340
NAE1050WHI	2	340
NAE5050WHI	2	340
NAE7550WHI	2	340
NAE7575WHI	2	340
NAF3TCSIWHI	1	345
NAF3TCWHI	1	345
NAF3WHI	1	345
NAF4TCSIWHI	1	345
NAF4TCWHI	1	345
NAF4WHI	1	345
NAF1010WHI*	1	341
NAF1040WHI	2	341
NAF1050WHI	2	341
NAF5050WHI	2	341
NAF7550WHI	2	341
NAF7575WHI	2	341
NAI3TCWHI	1	345
NAI3WHI	1	345
NAI4TCWHI	1	345
NAI4WHI	1	345
NAI1010WHI*	1	340
NAI1040WHI	2	340
NAI1050WHI	2	340
NAI5050WHI	2	340
NAI7550WHI	2	340
NAI7575WHI	2	340
NBP50WHI	10	341
NBP75WHI	10	341
NBP100WHI	10	341
NBT3TCWHI	12m	344
NBT3WHI	12m	344
NBT4TCWHI	12m	344
NBT4WHI	12m	344
NBT100LIDWHI	12m	345
NCI3WHI	10	345
NCI4WHI	10	345
NCI1010WHI	5	340
NCI1040WHI	5	340
NCI1050WHI	5	340
NCI5050WHI	5	340
NCI7550WHI	5	340
NCI7575WHI	5	340
NCT50LIDWHI	12m	340
NCT75LIDWHI	12m	340
NCT100LIDWHI	12m	340
NCT1010D1*	8m	340
NCT1010WHI	12m	340
NCT1040D1*	8m	340
NCT1040WHI	12m	340
NCT1050D1*	8m	340
NCT1050WH	12m	340
NCT5050D1WHI*	12m	340
NCT5050WHI	12m	340
NCT7550D1*	12m	340
NCT7550WHI	12m	340
NCT7575D1*	8m	340
NCT7575WHI	12m	340
NCU1010WHI	1	342
NCU1040WHI	1	342
NCU1050WHI	1	342
NCU5050WHI	1	342
NCU7550WHI	1	342
NCU7575WHI	1	342
NDAE1050WHI	2	340
NDAF1050WHI	2	341
NDAI1050WHI	2	340
NDTF1050WHI	2	341
NEP3WHI	10	344
NEP4WHI	10	344
NEP1010WHI	5	341
NEP1040WHI	5	341
NEP1050WHI	5	341
NEP5050WHI	5	341
NEP7550WHI	5	341
NEP7575WHI	5	341
NFC1010WHI	1	342
NFC1040WHI	1	342
NFC1050WHI	1	342
NFC5050WHI	1	342
NFC7550WHI	1	342
NFC7575WHI	1	342
NJC1010WHI	5	341
NJC1040WHI	5	341

For product codes that contain a * please see the relevant product page for full details.

Index

LIST NO.	STD PACK	PAGE
NJC1050WHI	5	341
NJC5050WHI	10	341
NJC7550WHI	10	341
NJC7575WHI	10	341
NMD5050WHI	2	341
NSO1TWHI	5	345
NSO1WHI	10	345
NSO2WHI	5	345
NSP100WHI	10	342
NTF3TCWHI	1	344
NTF3WHI	1	344
NTF4TCWHI	1	344
NTF4WHI	1	344
NTF1010WHI*	1	341
NTF1040WHI	2	341
NTF1050WHI	2	341
NTF5050WHI	2	341
NTF7550WHI	2	341
NTF7575WHI	2	341
NVS40WHI	36m	341
NVS50WHI	36m	341
NVS75WHI	36m	341
NVS100WHI	36m	341
NWP1040WHI	5	342
NWP1050WHI	5	342
NWP5050WHI	5	342
NWP7550WHI	5	342
NWP7575WHI	5	342
NXB200UK-2	1	407
NXB265UK-3	1	407
NXB265XUK-3	1	405, 407
NXB340UK-4	1	407
NXB340XUK-4	1	405, 407
NXGB100X-1	1	410
NXGCBRD	1	410
NXGCBRP	1	410
NXGCNID	1	410
NXGCNIP	1	410
NXJ200UK	1	405, 407
NXJ200XUK	1	405, 407
NXJ265XUK	1	405, 407
NXJ340UK	1	405, 407
NXJ340XUK	1	405, 407

LIST NO.	STD PACK	PAGE
NXLB200-15	1	408
NXLB200-20	1	408
NXLB200-25	1	408
NXLB200-30	1	408
NXLB200X-15	1	408
NXLB200X-20	1	408
NXLB200X-25	1	408
NXLB200X-30	1	408
NXLB265-15	1	408
NXLB265-20	1	408
NXLB265-25	1	408
NXLB265-30	1	408
NXLB265X-15	1	408
NXLB265X-20	1	408
NXLB265X-25	1	408
NXLB265X-30	1	408
NXLB340-15	1	408
NXLB340-20	1	408
NXLB340-25	1	408
NXLB340-30	1	408
NXLB340X-15	1	408
NXLB340X-20	1	408
NXLB340X-25	1	408
NXLB340X-30	1	408
NXLC-01BEG	1	408, 411
NXLC200-15	1	407
NXLC200-20	1	407
NXLC200-25	1	407
NXLC200-30	1	407
NXLC200X-15	1	407
NXLC200X-20	1	407
NXLC200X-25	1	407
NXLC200X-30	1	407
NXLC265-15	1	407
NXLC265-20	1	407
NXLC265-25	1	407
NXLC265-30	1	407
NXLC265X-15	1	407
NXLC265X-20	1	407
NXLC265X-25	1	407
NXLC265X-30	1	407
NXLC340-15	1	407
NXLC340-20	1	407

LIST NO.	STD PACK	PAGE
NXLC340-25	1	407
NXLC340-30	1	407
NXLC340X-15	1	407
NXLC340X-20	1	407
NXLC340X-25	1	407
NXLC340X-30	1	407
NXLS200X-15	1	405
NXLS200X-20	1	405
NXLS200X-25	1	405
NXLS200X-30	1	405
NXLS265X-15	1	405
NXLS265X-20	1	405
NXLS265X-25	1	405
NXLS265X-30	1	405
NXLS340X-15	1	405
NXLS340X-20	1	405
NXLS340X-25	1	405
NXLS340X-30	1	405
O		
OA3WHI	50	359
OS2WHI	100	359
OS3WHI	100	359
OS4WHI	100	359
P		
P53BLK	10	239
P153BLK	10	239
PBUD1WHI	1	336
PBUD2WHI	1	336
PBUD3WHI	1	336
PBUS1WHI	1	336
PBUS2WHI	1	336
PBUS3WHI	1	336
PBUS21WHI	1	336
PCCD2WHI	10m	337
PCCS2WHI	20m	337
PCWHI	10	334
PD2WHI	20m	335
PECDWHI	5	334
PECHWHI	1	335
PECSWHI	10	334
PF133BLK	10	239
PF133ORG	10	239

For product codes that contain a * please see the relevant product page for full details.

Index

LIST NO.	STD PACK	PAGE
PF133WHI	10	239
PICHWHI	1	335
PICLWHI	1	335
PPA100ALM	1	318
PPA100LIDWHI	2	319
PPA100WHI	1	318
PPC10WHI	3m	319
PPC20WHI	1	319
PPC40WHI	1	319
PPC50WHI	1	319
PPC60CHA	10	319
PPC60WHI	1	319
PPCMHCHA	1	319
PPCMHWHI	1	319
PPK1WHI	1	319
PPT650ALM	1	318
PPT650WHI	1	318
PSC2WHI	20m	337
PTS2WHI	4m	334
PTS3WHI	6m	334
Q		
QFB/IG1	20	61
QFB1WHI	20	61, 216
QFB2WHI	10	216
R		
REC1WHI	150m	360
REC2WHI	150m	360
REC3WHI	150m	360
S		
SIC	100	371
SMB2BLK	50	367
SMB3BLK	50	367
SMB4BLK	50	367
SMB5BLK	25	367
SMB6BLK	25	367
SMT1D1WHI	60m	384
SMT1WHI	60m	384
SMT3D1WHI	60m	384
SMT3WHI	60m	384
SMT4D1WHI	60m	384
SMT4WHI	60m	384
SPF1D1WHI	60m	376

LIST NO.	STD PACK	PAGE
SPF1WHI	60m	376
SPF2D1WHI	60m	376
SPF2WHI	30m	376
SPF3D1WHI	32m	376
SPF3WHI	30m	376
SPF4WHI	30m	376
SB100	1	389
SB200	1	389
SB300	1	389
SB400	1	389
SB9001	1	389
SB9002	1	389
SB9003	1	389
SB9004	1	389
SB9006	1	389
SF88100	1	421
SF88105	5	421
SF88106	5	421
SF88107	5	421
SF88116	10	421
SF88117	10	421
SF88142	1	421
SF88143	1	421
SF88144	1	421
SF88145	1	421
SF88150	1	421
SF88152	1	420, 424
SF88153	1	420
SF88172	1	420, 424
SF88173	1	420, 424
SF88176	1	420, 424
SF88177	1	420
SF88180	1	420, 424
SF88181	1	420
SF88184	1	420, 424
SF88185	1	420, 424
SF88188	1	420, 424
SF88189	1	420, 424
SF88200	1	421
SF88206	5	421
SF88246	1	421
SF88247	1	421

LIST NO.	STD PACK	PAGE
SF88248	1	421
SF88249	1	421
SIC	100	357
SM34900A0	1	432
SM34900C0	1	432
SM34901A0	1	432
SM42449	1	432
SM49004	1	432
SM49005	1	432
SM49006	1	432
SM49007	1	432
SM49008	1	432
SM49009	1	432
SM49010	1	432
SM49011	1	432
SM49012	1	432
SM49013	1	432
SM49018	1	432
SM49019	1	432
SM910101	1	432
SM937895	1	432
SM980911	1	432
SM980922	1	432
SMB2BLK	50	353
SMB3BLK	50	353
SMB4BLK	50	353
SMB5BLK	25	353
SMB6BLK	25	353
SMCHAIN5	1	432
SMT1D1WHI	60m	370
SMT1WHI	60m	370
SMT3D1WHI	60m	370
SMT3WHI	60m	370
SMT4D1WHI	60m	370
SMT4WHI	60m	370
SPF1D1WHI	60m	362
SPF1WHI	60m	362
SPF2D1WHI	60m	362
SPF2WHI	30m	362
SPF3D1WHI	32m	362
SPF3WHI	30m	362
SPF4WHI	30m	362

For product codes that contain a * please see the relevant product page for full details.

Index

LIST NO.	STD PACK	PAGE
T		
TCE6	5	347
TCE7*	1	347
TCE8*	1	347
TCE9*	1	347
TCI1	10	347
TCI2	10	347
TCE6	5	347
TCE7*	1	347
TCE8*	1	347
TCE9*	1	347
TCI1	10	347
TCI2	10	347
TCI3	5	347
TCI4	5	347
TCI5	5	347
TCI6	5	347
TEP1	10	347
TEP2	10	347
TEP3	5	347
TEP4	5	347
TEP5	5	347
TEP6	5	347
TEP7*	1	347
TEP8*	1	347
TEP9*	1	347
TPR1GRY	200	347
TPR1WHI	200	347
U		
UB61233GRN	1	374
UB61233GRY	1	374
UB61235GRN	1	374
UB61236DUO	1	374
UB62433GRN	1	374
UB62433GRY	1	374
UB62435GRN	1	374
UB62436DUO	1	374
UB63633GRN	1	374
UB63633GRY	1	374
UB63635GRN	1	374
UB63636DUO	1	374
UEA2WHI	25	364

LIST NO.	STD PACK	PAGE
UEA3WHI	25	364
UF63GRN	1	375
UF63GRNLH	1	375
UF63GRY	1	375
UF63GRYLH	1	375
UF64RED	1	375
UF64REDLH	1	375
UF65GRN	1	375
UF65GRNLH	1	375
UF66DUO	1	375
UF66DUOLH	1	375
UI6312GRN	1	375
UI6312GRY	1	375
UI6324GRN	1	375
UI6324GRY	1	375
UI6336GRN	1	375
UI6336GRY	1	375
UI6412RED	1	375
UI6424RED	1	375
UI6436RED	1	375
UI6512GRN	1	375
UI6524GRN	1	375
UI6536GRN	1	375
UI6612DUO	1	375
UI6624DUO	1	375
UI6636DUO	1	375
UK1	1	376
UK2E	1	429
UK3	1	376
UK4	1	429
UK5*	1	376
UK5F*	1	376
UKDC	1	376, 429
UT31301	1	401
UT31301C	1	376, 401
UT31302	1	401
UT31302C	1	376, 401
UT31304	1	376, 401
UT31304C	1	376, 401
UT31310	1	376, 401
UT31310C	1	376, 401
UT31311	1	376, 401

LIST NO.	STD PACK	PAGE
UT31311C	1	376, 401
UT33201	1	376, 401
UT33201†††	1	376
UT33202	1	401
UT33202†††	1	376
UT33204	1	401
UT33204†††	1	376
UT33205	1	376, 401
UT33206	1	376, 401
UT33210	1	376, 401
UT33211	1	376, 401
UT51301	1	376
UT51301C	1	376, 401
UT51302	1	376, 401
UT51302C	1	376, 401
UT51304	1	376, 401
UT51304C	1	376, 401
UT51310	1	376, 401
UT51310C	1	376, 401
UT51311	1	376, 401
UT51311C	1	376, 401
UT53201	1	376, 401
UT53201†††	1	376
UT53202	1	401
UT53202†††	1	376
UT53204	1	401
UT53204†††	1	376
UT53205	1	376, 401
UT53206	1	376, 401
UT53210	1	376, 401
UT53211	1	376, 401
V		
VCT25WHI	10	310
VCT30*	15m	310
VCT35WHI	1	310
VCT100WHI	308	
VCT105WHI	50	310
VCT110WHI	30m	308
VCT120WHI	15m	308
VCT121WHI	25	310
VCT122WHI	10	310
VCT140WHI	6m	308

For product codes that contain a * please see the relevant product page for full details.

Index

LIST NO.	STD PACK	PAGE
VCT141WHI	2	309
VCT142WHI	1	309
VCT143WHI	2	309
VCT144WHI	2	309
VCT145WHI	2	309
VCT147WHI	1	309
VCT148WHI	10	310
VCT160WHI	15m	308
VCT161WHI	2	309
VCT162WHI	2	309
VCT163WHI	2	309
VCT164WHI	5	309
VCT165WHI	2	309
VCT166WHI	2	309
VCT167WHI	1	309
VP30**	15m	296
VP35WHI	1	296
VP100WHI	294	294
VP105WHI	50	296, 303
VP110WHI	30m	294
VP115WHI	30m	294
VP121WHI	25	296, 303
VP122WHI	10	296, 303
VP123WHI	5	296, 303
VP129CHA	50	296
VP129WHI	50	296
VP131CHA	25	296
VP131WHI	25	296, 303
VP132CHA	10	296
VP132WHI	10	296, 303
VP180WHI	6m	294, 302
VP181WHI	2	294
VP182WHI	2	295
VP183WHI	2	295
VP184WHI	5	295
VP185WHI	1	295
VP187WHI	1	295
VP188WHI	10	295
VP191WHI	2	294
VP192WHI	2	295
VP193WHI	2	295
VP194WHI	5	295

LIST NO.	STD PACK	PAGE
VP197WHI	1	295
VPAB100WHI	6m	302
VPAB110WHI	30m	302
VPAB115WHI	30m	302
VPAB129WHI**	50	303
VPAB181WHI	2	302
VPAB182WHI	2	302
VPAB183WHI	2	302
VPAB184WHI	25	303
VPAB185WHI	1	303
VPAB187WHI	1	303
VPAB191WHI	2	302
VPAB192WHI	2	302
VPAB193WHI	2	302
VPAB194WHI	2	303
VPAB195WHI	1	303
VPAB196WHI	1	303
VPAB197WHI	1	303
VTS5D1WHI	20m	314
VTS5WHI	30m	314
VTS11WHI	10	327, 335
VTS12WHI	10	327
VTS25SWHI	10	314, 337
VTS50WHI	30m	315
VTS1000	20	296, 310
VTS2001D1WHI	4m	314
VTS2001WHI	6m	314
VTS2003WHI	1	315
VTS2004WHI	1	315
VTS2005WHI	2	314
VTS2006WHI	2	315
VTS2009WHI	1	315
VTS2010WHI	10	314
VTS2011WHI	10	314
VTS2012WHI	1	315
VTS2014WHI	1	315
VTS2018WHI	10	315
VTS2019WHI	10	315
VTS2081WHI	10	314
VTS2084WHI	10	314
VTS2090WHI	10	314
VTS4545RWHI	10	316

LIST NO.	STD PACK	PAGE
VTS4545WHI	10	316
VTS6000WHI	10	315, 337, 342
VTS6025WHI	25	316, 337, 343
VTS6035WHI	25	316, 337, 343
VTS7000WHI	5	315, 337, 342
VTS7025WH	10	316
VTS7025WHI	10	337, 343
VTS7035WHI	10	316, 337, 343
VTS8028WHI	5	316, 337, 343
VTS8035	5	343
VTS8035	10	316, 337
VTSAB1000WHI	20	303
VTSKMH1WHI	1	337, 343
VX31	10	296, 303, 310
VX40BLU	20	296, 310
VX40CHA	20	296, 310
VX41BLU	10	296, 310
VX41CHA	10	296, 310
VXAB40CHA*	20	303
VXAB41CHA*	10	303
X		
XC2WHI	100	359
XC3WHI	100	359
XC4WHI	100	359
Y		
YA12WHI	20	363
YA12WHI OR CHA	20	363
YA13WHI	5	363
YA14WHI OR CHA	5	363
YA15WHI	5	363
YA16WHI	5	363
YA17WHI*	5	363
YA18WHI	5	363
YA1200WHI	20	363
YAE1WHI	20	363, 368
YAE2RED	20	368
YAE2WHI	20	363, 368
YAE2WHI OR CHA	20	363

For product codes that contain a * please see the relevant product page for full details.

Index

LIST NO.	STD PACK	PAGE
YAE3WHI	5	363, 368
YAE4WHI OR CHA	5	363
YAE5WHI	5	363
YAE6WHI	5	363
YAE7WHI*	5	363
YAE8WHI	5	363
YAE200WHI	20	363, 368
YAF1WHI	20	363, 368
YAF2RED	20	368
YAF2WHI	20	368
YAF2WHI OR CHA	20	363
YAF3WHI	5	363, 368
YAF4WHI OR CHA	5	363
YAF5WHI	5	363
YAF6WHI	5	363
YAF6WHI*	5	363
YAF7WHI*	5	363
YAF8WHI	5	363
YAF200WHI	20	363, 368
YAI1WHI	20	363, 368
YAI2RED	20	368
YAI2WHI	20	368
YAI3WHI	20	368
YAI200WHI	20	368
YC1WHI	20	362, 368
YC2RED	20	368
YC2WHI	20	362, 368
YC3WHI	10	362, 368
YC4WHI	10	362
YC5WHI	10	362
YC8WHI	10	362
YC200WHI	20	362, 368
YCR1ELWHI	10	364
YCR502RED	5	369
YCR502WHI	5	369
YCR1001ELWHI	10	370
YCR1002ELWHI	10	370
YDA13WHI	10	363
YDAE3WHI	5	363
YDAF3WHI	10	363
YDTF3WHI	10	363
YEA1WHI	25	364, 369

LIST NO.	STD PACK	PAGE
YEA2RED	25	369
YEA2WHI	25	364, 369
YEA3WHI	25	364, 369
YEA200WHI	25	369
YEP1WHI	20	363, 368
YEP2RED	20	368
YEP2WHI	20	363, 368
YEP2WHI OR CHA	20	363
YEP3WHI	20	363, 368
YEP4WHI OR CHA	20	363
YEP5WHI	20	363
YEP6WHI	10	363
YEP7WHI	10	363
YEP8WHI	10	363
YEP200WHI	20	363, 368
YST21WHI	10	364, 368
YST22RED	20	368
YST22WHI	10	364
YST22WHI	20	368
YT1D1WHI	60m	362
YT1WHI	90m	362, 368
YT2CHA	30m	362
YT2D1WHI	60m	362
YT2RED	30m	368
YT2WHI	90m	362, 368
YT3D1WHI	32m	362
YT3WHI	45m	362, 368
YT4CHA	30m	362
YT4D1WHI	32m	362
YT4WHI	45m	362
YT5D1WHI	32m	362
YT5WHI	45m	362
YT6D1WHI	32m	362
YT6WHI	30m	362
YT7D1WHI	32m	362
YT7WHI	30m	362
YT8WHI	12m	362
YT200D1WHI	32m	362
YT200WHI	30m	362, 368
YTF1WHI	20	363, 368
YTF3WHI	5	363, 368
YTF4WHI OR CHA	5	363

LIST NO.	STD PACK	PAGE
YTF5WHI	5	363
YTF6WHI	5	363
YTF21WHI	20	363, 368
YTF22RED	20	368
YTF22WHI	20	368
YTF22WHI OR CHA	20	363
YTF42WHI OR CHA	5	363
YTF200WHI	20	363, 368
Z		
ZT3WHI	30m	362
ZT4D1WHI	32m	362
ZT4WHI	30m	362
01-99		
2ECR1	20	354
2ECR13	20	354
2ECR13BLK	25	61
2ECR13WHI	25	61
2ECR14	20	355
2ECR15	20	355
2ECR17	20	354
2ECR18	20	354
2ECR1BLK	25	61
2ECR1ELWHI*	20	354
2ECR1WHI	25	61
2ECR2	20	354
2ECR25BLK	10	356
2ECR3	20	354
2ECR3BLK	25	61
2ECR3WHI	25	61
2ECR4	20	355
2ECR5	20	355
2ECR5EL*	20	355
2ECR6	20	355
2ECR6EL*	20	355
2ECR7	20	354
2ECR8	20	354
2ECR8BLK	10	61
2ECR8WHI	10	61
3ECR14	10	355
3ECR15	10	355
3ECR2	10	354

For product codes that contain a * please see the relevant product page for full details.

Index

LIST NO.	STD PACK	PAGE
3ECR3	10	354
3ECR4	10	355
3ECR5	10	355
3ECR6	10	355
100-999		
400NAT	10	50
502WHI	10	241
505WHI	10	241
515WHI	10	241
641WHI	10	241
643WHI	10	241
644ZIC	10	223, 240
645NIP	100	223, 240
646CHA	10	240
646WHI	10	240
647WHI	10	240
655BLK	10	240
655D8RED	10	240
655D8WHI	10	240
655RED	10	240
655WHI	10	240
690WHI	5	241
692WHI	5	241
696WHI	5	241
698PPK	10	241
734WHI	10	218
735WHI	10	218
740BRC	1	174
740BSS	10	174
740SAG	5	174
741BRC	1	174
741BSS	5	174
742BRC	1	174
744WHI	1	237
790BRC	1	183
790BSS	1	183
790SAG	1	183
791BRC	1	183
791BSS	1	183
2ECR8WHI	10	61
3ECR14	10	355
3ECR15	10	355

LIST NO.	STD PACK	PAGE
3ECR2	10	354
3ECR3	10	354
3ECR4	10	355
3ECR5	10	355
3ECR6	10	355
400NAT	10	50
502WHI	10	241
505WHI	10	241
515WHI	10	241
641WHI	10	241
643WHI	10	241
644ZIC	10	223, 240
645NIP	100	223, 240
646CHA	10	240
646WHI	10	240
647WHI	10	240
655BLK	10	240
655D8RED	10	240
655D8WHI	10	240
655RED	10	240
655WHI	10	240
690WHI	5	241
692WHI	5	241
696WHI	5	241
698PPK	10	241
734WHI	10	218
735WHI	10	218
740BRC	1	174
740BSS	10	174
740SAG	5	174
741BRC	1	174
741BSS	5	174
742BRC	1	174
744WHI	1	237
790BRC	1	183
790BSS	1	183
790SAG	1	183
791BRC	1	183
791BSS	1	183
791SAG	1	183
795BRC	1	183
795BSS	1	183

LIST NO.	STD PACK	PAGE
795SAG	1	183
796BRC	1	183
796BSS	1	183
796SAG	1	183
800ZIC	20	221
821ALM	10	206
822ALM	5	206
822ALM	10	206
823ALM	5	206-7
825ALM	5	207
853ZIC	1	212
854ZIC	1	212
857ZIC	1	212
858ZIC	1	212
861ZIC	10	61, 211, 217
862ZIC	5	211, 217
866ZIC	10	211, 217
867ZIC	1	212
868ZIC	1	213
869ZIC	1	213
870ZIC	1	213
877ZIC	10	211, 217
878ZIC	5	211, 217
886ZIC	5	211, 217
887ZIC	5	214
888ZIC	10	214
891ALM	10	206
892ALM	5	206
893ALM	5	206-7
895ALM	1	207
898ALM	1	207
900ALM	1	207
913WHI	5	221
914WHI	5	221
995WHI	10	219
1100BLK	10	221
1130WHI	10	220
1131WHI	10	220
1132WHI	10	220
1133WHI	10	220
1146WHI	10	56
1149WHI	10	56

For product codes that contain a * please see the relevant product page for full details.

Index

LIST NO.	STD PACK	PAGE
1150WHI	10	56
1152WHI	10	56
1154WHI	10	56
1174WHI	10	56
1909WHI	10	331
1919	5	330
1922ALM	5	327
1923WHI	10	330
1924WHI	10	330
1928GLV	10	330
1930WHI	10	331
1933WHI	3m	331
1934WHI	15m	327
1942WHI	5	329
1943WHI	5	329
1946WHI	5	330
1947WHI	5	330
1950WHI	5	328
1951WHI	5	328
1952WHI	5	328
1953WHI	5	328
1955WHI	5	328
1956WHI	5	328
1970WHI	5	329
1971WHI	5	329
1976WHI	5	330
1978WHI	5	330
1986WHI	5	330
1995WHI	5	329
1998	5	330
1999WHI	5	329
2000-2999		
2001ALM	5	213
2002ALM	5	213
2003ALM	5	213
2004ALM	5	213
2031WHI	10	216
2120WHI	10	215
2140WHI	10	216
2180WHI	10	215
2181WHI	10	215
2182WHI	5	215

LIST NO.	STD PACK	PAGE
2183WHI	5	215
2211ALM	5	211
2212ALM	5	211
2213ALM	5	211
2214ALM	5	211
2531WHI	5	218
2949WHI	5	218
2959WHI	10	218
3000-3999		
3151WHI	5	54
3164WHI	5	54
3190RCWHI	5	54
3369ALM	5	214
3370ALM	10	214
3390ALM	10	214
3400ZIC	10	223
3405ZIC	10	223
3710	100	221
3714	100	221
3840ZIC	10	221
3891ZIC	5	207
3895ZIC	5	207
3921ZIC	10	61, 214, 217
4000-4999		
4352SSABST9	100	222
4352SSBRST9	100	222
4352SSDBZT9	100	222
4352SSLBKT9	100	222
4352SSLIVT9	100	222
4352SSNIPT9	100	222
4352SSPBRT9	100	222
4352SSTCOT9	100	222
4352SSTIRT9	100	222
4352SSWHIT9	100	222
4700WHI	10	219
4724WHI	10	219
5000-5999		
5114WHI	1	219
5115WHI	1	219
5116WHI	1	219
5120ALM	1	214

LIST NO.	STD PACK	PAGE
5144SS000T9	1	221
5268ALM	1	214
5500s	5	278
5544s	5	286
5560s	5	278
5562s	1	286
5640s	1	283
5650s	1	286
5660s	1	283
5903s	10	279
5906s	10	279
5910s	10	279
5916s	10	279
5920s	10	279
5925s	10	279
5932s	10	279
5940s	10	279
5945s	10	279
5950s	10	279
6000-6999		
6216s	1	283
6220s	1	284
6240s	1	283
6263s	1	284
6363s	1	284
6420s	1	284
6425s	1	283
6440s	1	283
6463s	1	284
6630s	1	283
6640s	1	284
6720s	1	284
6810	10	253
6813	10	253
6814	10	253
6817	10	253
6818	10	253
6819	10	253
6980s		283
7000-7999		
7179PS	10	221
7240s	1	284

For product codes that contain a * please see the relevant product page for full details.

Index

LIST NO.	STD PACK	PAGE
7263s	1	284
7440s	1	284
7463s	1	284
7560s	1	281
7580s	1	281
7660s	1	281
7680s	1	281
7816s	1	280
7832s	1	281
7840s	1	281
7860s	1	281
7880s	1	281
7932s	1	280
7933s	1	280
7934s	1	280
7935s	1	280
7936s	1	280
7937s	1	280
7938s	1	280
7939s	1	280
8000-8999		
8329SSWHIT9	10	54
8703s	10	279
8706s	10	279
8710s	10	279
8716s	10	279
8720s	10	279
8725s	10	279
8732s	10	279
8740s	10	279
8750s	10	279
8763s	10	279
8932s	1	280
8933s	1	280
8934s	1	280
8935s	1	280
8936s	1	280
9000-9999		
9420SSD1	10	54
9420SST9	1	54
9936	5	262
9960BLK	1	262

LIST NO.	STD PACK	PAGE
9966BLK	1	262
9967BLK	1	262
10000-99999		
11130BRSMA	100	223
11130NIPMA	100	223
11135BRSMA	100	223
11135BRSMB	100	223
11135BRSME	100	223
11135BRSMG	100	223
11135BRSMN	100	223
11135NIPMA	100	223
11135NIPMB	100	223
11135NIPME	100	223
11135NIPMG	100	223
11135NIPMN	100	223
11430BRSMA	100	223
11430NIPMA	100	223
11435BRSME	100	223
11435BRSMJ	100	223
11435NIPME	100	223
11435NIPMJ	100	223
11817PS	100	331
11827PS	100	331
12024SLT9	10	330
17270SS	10	221
40533PLWHIT9	1	45
43066SSABST9	100	100
43066SSBRST9	100	222
43066SSDBZT9	100	222
43066SSLBKT9	100	222
43066SSLIVT9	100	222
43066SSNIPT9	100	222
43066SSPBRT9	100	222
43066SSTCOT9	100	222
43066SSTIRT9	100	222
43066SSWHIT9	100	222
48370SSABST9	100	223
48370SSBRST9	100	223
48370SSDBZT9	100	223
48370SSLBKT9	100	223
48370SSLIVT9	100	223
48370SSNIPT9	100	223
48370SSPBRT9	100	223

LIST NO.	STD PACK	PAGE
48370SSTCOT9	100	223
48370SSTIRT9	100	223
48370SSWHIT9	100	223
56460GRY	5	248
56460WHI	5	248
56461BLK	5	248
56461WHI	5	248
56462BLK	5	248
56462WHI	5	248
56463BLK	5	248
56463WHI	5	248
56464BLK	5	248
56464WHI	5	248
56500GRY	1	248
56502GRY	1	248
56881BLK	10	247
56882BLK	10	247
56883BLK	10	247
56889RED	10	247
56890GRN	5	248
56891BLK	10	247
56892BLK	10	247
56893BLK	10	247
56896BLK	10	247
64603WHI	10	240
65503WHI	10	240

For product codes that contain a * please see the relevant product page for full details.

EX-OR

RANGE INTRODUCTION

Ex-Or lighting management systems offers lighting controls for all applications and includes presence detection, lighting management, architectural dimming and scene-setting, and emergency lighting testing.

Ex-Or Systems help customers achieve energy savings, reduce fuel bills, and create an optimum environment for staff or visitors.

EX-OR MLS DIGITAL – NETWORKED MANAGED LIGHTING SYSTEM

MLS Digital offers a flexible, user-responsive, building-wide control solution via a network of communicating detectors, either integrated within individual luminaires or mounted remotely to control groups of lights.

FEATURES & BENEFITS

MAXIMISES CUSTOMERS' ENERGY SAVINGS

ZONED LIGHTING FOR ENHANCED CONVENIENCE AND VISUAL COMFORT

STRAIGHTFORWARD INSTALLATION AND SIMPLE COMMISSIONING

FLEXIBILITY TO ACCOMMODATE CHANGES IN LAYOUT OR USAGE WITHOUT ALTERING WIRING

EX-OR CONNECT – LIGHTING CONTROL MODULES AND PLUG-IN CONNECTION CENTRES

Ex-Or Connect offers plug-in simplicity via a range of purpose-designed connection centres with varying degrees of sophistication. MLS Connect Digital can also incorporate FailSafe emergency lighting testing.

FEATURES & BENEFITS

QUICKER AND EASIER INSTALLATION FOR TIME AND COST SAVINGS

ELIMINATION OF WIRING FAULTS AS PRE-WIRED LUMINAIRES AND DETECTORS ARE DELIVERED DIRECT TO SITE

FLEXIBILITY AS LUMINAIRES AND DETECTORS CAN BE CHANGED OR RE-POSITIONED WITHOUT MAJOR DISRUPTION

EX-OR LIGHTSPOT HD – STAND-ALONE LIGHTING CONTROL BY PRESENCE DETECTION AND DAYLIGHT HARVESTING

Ex-Or LightSpot HD controls are designed to save energy by ensuring that lights are never left burning needlessly in an area that has been vacated or where there is already enough natural light. Savings of 40% to 60% are usually made in office applications but they can be as high as 70% and more in areas such as warehouses.

FEATURES & BENEFITS

EFFECTIVE ENVIRONMENTAL AND MONEY-SAVING SOLUTION

HIGH DEFINITION LENSES AND PERFORMANCE OPTICS PROVIDE CLASS LEADING SENSITIVITY

EASY TO INSTALL, EASY TO COMMISSION AND EASY TO USE.

EX-OR SCENESELECT – ARCHITECTURAL SCENE-SETTING AND DIMMING SYSTEM

Ex-Or SceneSelect allows the user to create and recall custom pre-set scenes. Once the lighting is set up in the area for an activity, the combination of lighting levels is saved as a pre-set scene and the user can fade between different pre-sets at the touch of a button.

FEATURES & BENEFITS

FLEXIBILITY IN DESIGN

INCREASED LAMP LIFE AND ENERGY SAVINGS

EASE OF INSTALLATION AND CONFIGURATION

HONEYWELL DOORBELLS

RANGE INTRODUCTION

Honeywell doorbells represent the next generation in technology for the home – doorbells that not only adapt to suit your home, but have the capability to grow with your family as needs and habits evolve.

By taking Friedland's 60 year heritage of creating the best doorbells in the world, and adding Honeywell's expertise and track record in innovation, we've designed a range of truly revolutionary doorbells from the ground up that are not only stunning and incredibly reliable, but also completely change the definition of what a doorbell is capable of.

Honeywell doorbells are different because of their intuitive design and flexibility. They grow with your family, adapting to your home and lifestyle through a range of clever, customisable features so you're always able to control how you use them.

FEATURES & BENEFITS

PLUG IN DOORBELLS

PORTABLE DOORBELLS

HOME & GARDEN KITS

FRONT & BACK DOOR KITS

Honeywell **Technical Hotline +44 (0)800 279 3643**

Never miss a visitor or delivery

- ✓ Portable doorbells can be taken with you anywhere around the home and garden
- ✓ Wireless range of up to 200m means your doorbell will always work, wherever you place it
- ✓ Link two doorbells together to boost the wireless range from 200m up to 400m

Visual alerts

- ✓ The unique halo light and LED strobe features provide visual alerts – great in loud environments, when sleep or mute mode is activated
- ✓ Customisable halo light with 7 colours to choose from
- ✓ Nightlight mode guides your way in the dark with a soft comforting glow

Disturbance free

- ✓ Sleep mode mutes the sound for 3, 6, 9 or 12 hours, so you can relax free of any disturbance
- ✓ Use mute mode to silence the doorbell until you turn the sound back on again
- ✓ Easily adjust the volume to suit your family or mood

Compact size, rich sound

- ✓ Crystal clear sound quality that can be heard throughout the home and garden
- ✓ A maximum volume of 90dB gives an audible range of up to 100m
- ✓ Choose from up to 8 melodies
- ✓ Customise with your own melodies

Revolutionary design

- ✓ Compact size and stunning design seamlessly fits in with your décor
- ✓ Neutral colours of white and grey complement any room
- ✓ The USB charging feature means you can still charge your phone or tablet without unplugging your doorbell

Peace of mind

- ✓ Connect alarm accessories to your doorbell with Honeywell ActivLink™, to build a simple home alarm system for your family
- ✓ LED confidence light clearly indicates that your doorbell push is working
- ✓ Press three times quickly, and our secret knock function plays a different melody, so you know if it's a family member or friend at the door

HONEYWELL HEATING CONTROLS

RANGE INTRODUCTION

Honeywell domestic heating and combustion controls offer you the ultimate flexibility in time, temperature, gas and water control.

Our product range is designed to provide the homeowner with the best in comfort, energy and health solutions and lifestyle through a range of clever, customisable features so you're always able to control how you use them.

Time Control

A series of one and two channel time controllers with independent heating and hot water control and three switching times per channel per day for up to seven days programming on some models

Room Temperature Control

We provide an extensive range of room temperature control devices, so whether your requirement is for room thermostats, thermostatic radiator valves, frost thermostats or pipe and cylinder thermostats, Honeywell has the solution for you.

Connected Heating Control

We offer a full range of heating control products that can be controlled via a smartphone or tablet.

Multi Zone Heating Control

The evohome multi-zone heating system allows the control of up to 12 heating zones and hot water.

Combined Time & Temperature Control

7 day or 1 day combined time and temperature control of domestic heating systems is possible with our range of programmable thermostats

Flow Control

We provide products that control the flow of water in both domestic and commercial heating systems but also products that control both pressure and temperature in potable water circulation systems.

Technical Hotline
+44 (0)1268 563720

PRODUCT GUARANTEE

The Company undertakes to replace or repair Products at its discretion should they become defective within the following periods:

PRODUCT GUARANTEE	
MK ELECTRO / MECHANICAL	20 YEARS
ELEMENTS ELECTRO / MECHANICAL	20 YEARS
ELEMENTS ELECTRONIC	5 YEARS
MK SENSORS	2 YEARS
USB INTEGRATED SOCKET	5 YEARS
ECHO	2 YEARS
COMMANDO	10 YEARS
MK ELECTRONIC	10 YEARS
CIRCUIT PROTECTION	10 YEARS
POWER DISTRIBUTION SYSTEMS	5 YEARS
CABLE MANAGEMENT	10 YEARS

Solely as a result of faulty materials and or workmanship. Understandably if the product has not been installed or maintained in accordance with the Company's instructions, has not been used appropriately or if any attempt has been made to rectify, dismantle or alter the product in any way the Guarantee will be invalidated.

This Guarantee states the Company's entire liability. It does not extend to cover consequential loss or damage or installation costs arising from the defective product This Guarantee does not restrict or infringe the normal statutory or other rights of the consumer.

Customer Service Tel +44 (0)1268 563404
Customer Service Fax +44 (0)1268 563405
www.mkelectric.co.uk

Statement of Intent

The sale of non UK wiring devices within British Standard territories is not prohibited but, as a responsible UK manufacturer MK Electric has a duty to ensure that such products are installed safely and correctly.

As non UK products fall outside of the standards specified within the wiring regulations, additional measures need to be taken to ensure a safe and suitable installation is completed.

BS7671 IEE Wiring Regulations 17th Edition Amendment 3 (Part 5) provides guidance on how installers are to sign off installation of non UK products for total compliance.

Within the catalogue, non UK products are clearly identified in blue text at the end of the product description as exemplified below:

Socket Outlets

127V
FLUSH
15 AMP
(NON UK)

K2251WHI

At the point of order, customers will be prompted to complete a mandatory form and no products will be sold until the information requested has been provided. This form can be obtained by visiting www.mkelectric.co.uk or by emailing mkorderenquiries@honeywell.com

For any further assistance please contact the Technical Sales & Service Department on 01268 563720.

Abbreviation Key

ABBREVIATIONS USED IN THIS CATALOGUE

17ED	17th Edition
ABS	Antique Brass
ALM	Aluminium
ALMW	Painted White Aluminium
ALU	Aluminium
AMB	Amber
B	Black Inserts
BLK	Black
BLU	Blue
BR	Boiler
BRC	Brushed Chrome
BRO	Brown
BRS	Brass (Ancillary Products Only)
BSS	Brushed Stainless Steel
CE	Clean Earth
CH	Cooker Hood
CK	Marked 'Cooker'
CLR	Clear
CM	Coffee Machine
DAB	Digital Audio Broadcast
DBZ	Desert Bronze
DW	Dishwasher
EL	Marked 'EMG LTG' (Grid Plus Only
FF	Fridge Freezer
FG	Fridge
FN	Fan
FZ	Freezer
GIW	Glass Effect Ice White
GLAA	Glass, Aluminium
GLAB	Glass, Black
GLAG	Glass, Green
GLAGA	Glass, Grooved Aluminium
GPJ	Glass Effect Polished Jade
GPO	Glass Effect Polished Onyx
GPS	Glass Effect Polished Stone
GRA	Graphite
GRY	Grey
HB	Hob
HR	Heater
IG	Intumescent Gasket
IH	Immersion Heater
KO	Tamperproof Screw
L	Neon Locator / Luminous
LBK	Lustrous Black
LBS	Lacquered Brushed Steel
LIV	Lustrous Ivory
LSF	Low Smoke and Fume
LV	Low Voltage
M	Master (High Power Dimmer)
MAG	Magnolia
MBB	Metallic Brushed Bronze
MBS	Metallic Brushed Steel
MCI	Metallic Cast Iron
MET	Metal
MSP	Metallic Satin Platinum
MST	Metallic Satin Titanium
MW	Microwave
N	Neon
NBO	Natural British Oak
NCH	Natural Cream Hide
NDH	Natural Dark Hide
NDW	Natural Dark Wenge
NIP	Nickle Plated
ORG	Orange
OV	Oven
P	Marked 'Press'
PBR	Polished Brass
PBZ	Polished Bronze (Ancillary Products only)
PCR	Polished Chrome
PH	Plinth Heater
POC	Polished Chrome
RED	Red
S	Slave (High Power Dimmer)
SAG	Satin Gold
SBP	Synthetic Beach Pebble
SCW	Synthetic Chalk White
SNS	Synthetic Natural Stone
SH	Marked 'Shower'
TCO	Textured Copper
TD	Tumble Dryer
TIR	Textured Iron
W	With Window
W	White Inserts
WC	Wine Cooler
WD	Waste Disposal
WDA	Warming Drawer
WDR	Washer Dryer
WH	Water Heater
WHI	White
WHI	Porcelain White (Decorative Only)
WL	Worktop Lighting
WM	Washing Machine
YEL	Yellow
ZIC	Zinc Plated LV

1 Standard Carton Quantities are indicated by the number in the box after all product descriptions eg:

K2747WHI **1**
2 GANG

Standard Conditions of Sale

All previous issues are cancelled.

General
The "Seller" means Novar ED&S Limited.
The "Buyer" means the person, firm or company to whom the Seller supplies the Goods.
All quotations are given and all orders are accepted on these terms, replace and supersede any other terms wherever appearing, and override and exclude any other terms stipulated or incorporated or referred to by the Buyer, whether in the order or in any negotiations, and any course of dealing established between the Seller, and the Buyer. All orders hereafter made by the Buyer shall be deemed to be made subject to these terms.

Acceptance of Orders
No contract for the sale of goods ("the Goods") shall be concluded until either the Seller sends or otherwise communicates to the Buyer its acceptance of the Buyer's order or on the delivery to the Buyer of the Goods, whichever is the earlier. The Buyer acknowledges that there are no representations outside these terms that have induced the Buyer to enter into the contract (which expression shall include any contract of which these terms form part) and save as provided herein, these terms shall constitute the entire understanding between the parties for the sale of the Goods. No modification of these terms shall be effective unless made by an express written agreement between the parties. The signing by the Seller of any of the Buyer's documentation shall not imply any modification of these terms.

Illustrations, Descriptive Matter and Dimensions
All descriptions and illustrations contained in catalogues, price lists and advertisements or otherwise communicated to the Buyer are intended merely to present a general idea of the Goods described therein, and nothing contained in any of them shall form any part of the contract.

Designs
The Seller's policy is one of continuous improvement. The right to change designs at any time without notice is reserved.

Samples
Notwithstanding that a sample of the Goods may have been exhibited to and inspected by the Buyer, it is hereby agreed that such sample was so exhibited and inspected solely to enable the Buyer to judge for himself the quality of the bulk and not so as to constitute a sale by sample. The Buyer shall take the Goods at his own risk as to their corresponding with the said sample or as to their quality condition or sufficiency for any purpose.

Prices
All prices listed or quoted are provisional only and are subject to alteration without prior notice, and prices charged will be those current at the time of despatch of the Goods.

Delivery
All delivery dates are estimates only and the time of delivery shall not be of the essence of the contract. In no circumstances shall the Seller be liable to compensate the Buyer in damages or otherwise for non-delivery or late delivery of the Goods or any of them for whatever reason or for any loss consequential or otherwise arising there from. The Seller reserves the right to make partial deliveries and to allocate available supplies amongst customers in time of shortage. The Seller shall be entitled to deliver the Goods in one or more consignments unless otherwise expressly agreed. For UK sales, delivery shall be deemed to take place when the Goods are despatched from the Seller's premises. The Seller shall not be liable for any loss of any kind to the Buyer arising from any damage to the Goods occurring after the risk has been passed to the Buyer however caused, nor shall any liability of the Buyer to the Seller be diminished or extinguished by reason of such loss.

Carriage and Packing
Packing materials are in most instances non-returnable. The Seller will pay packing and carriage on all orders having a nett value of £250 (exc.VAT) or over and the Goods will be consigned by carrier at goods rate. Orders instructing despatch by other means will be subject to a packing and carriage charge to cover additional cost. Orders of less than £250 (exc.VAT) nett value will be consigned by parcel post up to 5kg in weight, otherwise goods will be consigned by carrier at goods rate.
A packing and carriage charge will be made for all such orders at the rate of £50 (exc.VAT).

Instructions and Labels
The Buyer shall ensure that labels, names, reference numbers and marks on the Goods and packing materials and cases are not removed altered or covered whilst the Goods are in his possession and shall not remove any label or plaque affixed to the Goods referring any user thereof to the Seller's or any other party's instructions and/or recommendations for use. If any item comprised in the Goods is resold by the Buyer the Buyer shall bring to the attention of his purchaser all instructions and/or recommendations for use packed with the Goods or which the Seller has otherwise notified to the Buyer.

Damage or Loss in Transit
When the price quoted includes delivery, the Seller shall repair or replace free of charge goods damaged in transit or not delivered in accordance with the advice note, provided that in the event of damage or shortage, written notification giving details of such damage or shortage must be sent to the Seller within 7 days of receipt, and in the event of non-delivery must be sent to the Seller within 14 days of the date shown on the advice note. Order number, advice note and date of despatch are required, and in the event of failure to give notice within the aforementioned period, the Goods will be deemed to be in all respects as invoiced.

Returns
Goods supplied in accordance with the Buyer's orders cannot be accepted for return without the Seller's written consent. If such consent is given an administration charge will be made. Returned Goods must be sent carriage free and at the Buyer's risk and will only be accepted if packed in the original carton which in the Seller's opinion is in a saleable condition. Only Goods of current design will be accepted for return.

Payments
For UK and Republic of Ireland sales, payment is due before the end of the month following despatch. Value Added Tax for UK sales is payable and is calculated on the cash discounted value of each invoice. If the Seller shall allow provisional credit in respect of any part of the Goods it shall be without prejudice to its rights to refuse to give up possession of any other part of the Goods except against payment: and the whole of the price of all goods bought or agreed to be bought by the Buyer shall fall due and payable without demand immediately on the happening of any of the following events:-
(a) failure by the Buyer to pay any sum due to the Seller within 14 days of the due date for payment;
(b) commencement of the winding up of the Buyer;
(c) any act, event or occurrence entitling any creditor of the Buyer to petition for the bankruptcy of the Buyer.
(d) appointment of a receiver of any asset of the Buyer, or the levying of any distress or execution or any asset of the Buyer.
The failure of the Buyer to pay any part of the price of the Goods in due time shall entitle the Seller to treat such failure as a repudiation of the whole contract by the Buyer and to recover damages for such breach of contract.
Interest on all sums due shall run at the rate of 2 per cent per annum over the base lending rate of Barclays Bank plc until payment is received before as well as after any judgement therefore.

Liability
These terms set out the Seller's entire liability in respect of the Goods and the Seller's liability under these terms shall be in lieu and to the exclusion of all other warranties, conditions, terms and liabilities expressed or implied statutory or otherwise in respect of the quality or the fitness for any particular purpose of the Goods or otherwise (notwithstanding any advice or representation to the Buyer, all liability in respect of which howsoever arising, is expressly excluded) except any implied by law which by law cannot be excluded. Save as provided in these terms and except as aforesaid the Seller shall not be under any liability, whether in contract, tort (including negligence) or otherwise, in respect of defects in the Goods or failure to correspond to specification or sample or for any injury, damage or loss resulting from such defects or failure or from any work done in connection therewith.
The Seller shall be under no liability to any purchaser of the Goods from the Buyer. In any event the Seller's liability (if any) whether in contract, tort or otherwise in respect of any defect in the Goods, or for any breach of this Agreement or of any duty owed to the Buyer in connection herewith, shall be further limited in the aggregate to the price of the Goods in question. Nothing in these terms shall restrict the Seller's liability for death or personal injury caused by the Seller's negligence.

Indemnity
The Buyer shall indemnify the Seller in respect of all damage injury or loss occurring to any person or property and against all actions, suits, claims, demands, charges or expenses in connection therewith arising from the condition or use of the Goods in the event and to the
extent that the damage injury or loss shall have been occasioned partly or wholly by the carelessness of the Buyer and his servants or agents or by any breach by the Buyer of its obligations to the Seller hereunder.

U.K. and Republic of Ireland Sales
For UK and Republic of Ireland sales risk of loss or damage to the Goods shall pass to the Buyer at the time of delivery. The property in the Goods shall not pass to the Buyer until: all sums due or owing to the Seller by the Buyer on any account have been paid. The whole of the price shall not be treated as paid until any cheque, bill of exchange or other instrument of payment given by the Buyer has been met on presentation or otherwise honoured in accordance with its terms. The Seller may sue for the whole of the price at any time after it has become payable.
Until such time as the property in the Goods passes to the Buyer, the Buyer shall hold the Goods on a fiduciary basis as bailee of the Seller and shall keep the Goods separate from those of the Buyer and third parties and properly stored, protected, insured and identified as the Seller's property, but the Buyer shall be entitled to resell and use the Goods in the ordinary course of its business for the account of the Seller. Until property in Goods passes from the Seller, the entire proceeds of sale or otherwise of the Goods shall be held in trust for the Seller and shall not be mixed with any other money or paid into any overdrawn bank account and shall be at all material times identified as the Seller's money. Until such time as property in Goods passes from the Seller the Buyer shall upon request deliver up such of the Goods as have not ceased to be in existence, or resold to the Seller. If the Buyer fails to do so the Seller may enter upon any premises owned, occupied or controlled by the Buyer where the Goods are situated and repossess the Goods. The Buyer shall not pledge or in any way charge by way of security for any indebtedness any of the Goods which remain the property of the Seller. Without prejudice to the other rights of the Seller, if the Buyer does so all sums whatever owing by the Buyer to the Seller shall forthwith become due and payable.

Export
All orders are accepted subject to a minimum value of £500. All Goods will be supplied and invoiced in multiples of carton quantities only. The basis of the prices quoted will be FOB as defined in Incoterms 2000 Edition, at a UK port which may be nominated by the Seller, or such other basis as may seem appropriate to the Seller in the circumstances.
Payment unless otherwise agreed must be by irrevocable letter of credit confirmed by an established UK bank satisfactory to the Seller. The Seller has separate standard terms and conditions which apply to export sales, and a copy will be supplied to the export buyers.

NOVAR ED&S Patents and Registered Designs
Many of the products offered for sale by the Seller are covered by UK and foreign patents or other intellectual property rights. It is not feasible to mark each component or product with the appropriate patent numbers, but any relevant and reasonable enquiries will be dealt with on application, subject to reimbursement of the Seller's out of pocket expenses. The Seller also has rights in a number of names and trade marks, registered and unregistered. The Seller will take all necessary legal action in any part of the world against any party found to be manufacturing, selling or otherwise dealing with any article which infringes the Seller's patents, trade marks or other similar intellectual property rights.

Force Majeure
Neither party shall be liable to the other for any failure or delay in the performance of any obligation hereunder as a result of strikes, lockouts, trade disputes, breakdown of plants, accident or other cause whatsoever beyond the reasonable control of the Seller or the Buyer respectively.

Legal Construction
The contract shall be governed by and interpreted in accordance with English Law, and the Buyer submits to the jurisdiction of the Courts in England but the Seller may enforce the contract in any court of competent jurisdiction. A person who is not a party to the contract shall have no rights under the Contracts (Rights of Third Parties) Act 1999 to enforce any of its terms.

Assignment
The Buyer shall not assign any benefit under the contract without the consent in writing of the Seller, which may if given be on such terms as to guarantee or indemnify or otherwise as the Seller thinks fit.

Health and Safety at Work etc. Act 1974.
Statement to purchasers and prospective purchasers

1. Section 6* of this Act provides that manufacturers, designers, importers or suppliers of articles for use at work have a duty to ensure, so far as is reasonably practicable, that the article will be safe and without risk to health at all times when it is being set, used, cleaned or maintained by a person at work. An absence of safety or risk to health is to be disregarded insofar as the case in or in relation to which it arises is shown to be one the occurrence of which could not reasonably be foreseen and in determining whether any such duty as aforementioned has been performed regard shall be had to any relevant information or advice which has been provided by the manufacturer, designer, importer or supplier.
2. Having regard to these provisions the following is given as a guide to the information which is readily available to you, in order that the obligations of all concerned may be met as fully as is reasonably practicable. This information relates to those products detailed in the Seller's catalogue(s) or associated literature.
3. Information on the design, construction and installation of the Seller's products to ensure that so far as is reasonably practicable they are safe and without risk to health when properly used may be found in:
   - Regulations for Electrical Equipment of Buildings (published by the Institution of Electrical Engineers) Catalogues and product leaflets of the Seller.
   - Or may be obtained by specific request to the Seller.
4. It is important that the products concerned should be installed, commissioned and maintained by, or under the supervision of competent persons in accordance with good engineering practice and
   - The Regulations for the Electrical Equipment of Buildings
   - Codes of Practice
   - Statutory Requirements
   - Any instructions specifically advised by the Seller and where appropriate, with particular reference to information marked on the product.
5. In accordance with the provisions of the Act, the Buyer is therefore requested to take such steps as are necessary to ensure that any appropriate information relevant to the Seller's products is made available by you to anyone concerned.

* As amended by section 36 of the Consumer Protection Act 1987.

Novar ED&S Limited,
The Arnold Centre,
Paycocke Road,
Basildon,
Essex
SS14 3EA

MK Trade Mark.
Registered in Great Britain and other countries 'MK' are the initials of 'Multy-Kontact' – a name coined to signify 'many points of contact' the salient feature of our pioneer spring-grip socket patented in 1919.

by Honeywell

Copyright MK Electric Limited 2016.

Standard Conditions of sale are subject to change, visit www.mkelectric.co.uk for the latest version.

MK Electric Catalogue Rangefinder

Product Range	Range	Technical Data
Wiring Devices		
Albany Plus	167-188	441-484
Ancillary Products	218-223	N/A
Aspect	98-128	441-484
Boxes	211-217	N/A
Ceiling Accessories	53-56	492-494
Commando Combination Units	264-267	569-573
Commando Modular Combi	268-269	N/A
Commando Plugs and Sockets	254-263	556-568
Commando Safetyswitch	250-253	554-555
Duraplug	236-239	538-540
Echo	21-31	437-440
Edge	130-166	441-484
Elements	70-97	497-525
Grid Plus	189-207	526-532
High Power Dimmer	208-210	534-536
Link	58-62	495-496
Logic Plus	32-52	441-484
Masterseal Plus	242-249	542-553
Metalclad Plus	224-235	441-484
Plugs and Adaptors	240-241	541
Sensors	63-66	485-491
Circuit Protection		
Sentry	271-286	576-604
Sentrysocket	288-289	606-607
Cable Management		
Ega Mini	361-365	672-674
Egatube	346-360	656-671
Norwich	344-345	650-654
Pinnacle	332-337	640-644
Poles & Posts	318-319	630-631
Powerlink Plus	321-331	632-639
Premier	338-343	645-649
Prestige 2Com	311-316	623-629
Prestige 3D	290-310	612-621
Red Alert	366-370	672-674
Power Distribution Systems		
Cablelink Plus Modular	377-381	677-680
Cablelink Plus Single Pan Box	383-386	681-682
Cablelink Plus Screed	413-424	689-694
DeskPod	395-401	684
Grommets	391-394	683
Hangmann	430-432	N/A
Interact	371-376	675-676
Interact Overhead	425-429	695-696
Onix	403-411	685-688
Slab Boxes	387-390	N/A

PEFC
PEFC/16-33-254
PEFC Certified
This product is from sustainably managed forests and controlled sources
www.pefc.org

MK Electric
UK
The Arnold Centre, Paycocke Road,
Basildon, Essex, SS14 3EA,
United Kingdom
Customer Service Tel +44 (0) 1268 563404
Customer Service Fax +44 (0) 1268 563405
E-mail mkorderenquiries@honeywell.com

Technical
Tech Helpline Tel 01268 563720
Tech E-mail mk.technical@honeywell.com
Ireland
Sales Tel 01 4296530
Sales Fax 01 4296501
E-mail mkorders@honeywell.com

www.mkelectric.co.uk

MK by Honeywell

Reference: UKMK003-0116-EN
January 2016

© 2016 Honeywell International Inc.

£25