SECURITY DOOR CONTROLS ■ WWW.SDCSECURITY.COM
[t] 800.413.8783 ■ 805.494.0622 ■ E-mail: service@sdcsecurity.com ■ 801 Avenida Acaso, Camarillo, CA 93012 ■ PO Box 3670, Camarillo, CA 93011

INSTALLATION INSTRUCTIONS

DTMO / DTMA
MINI DESKTOP REMOTE CONTROL CONSOLES

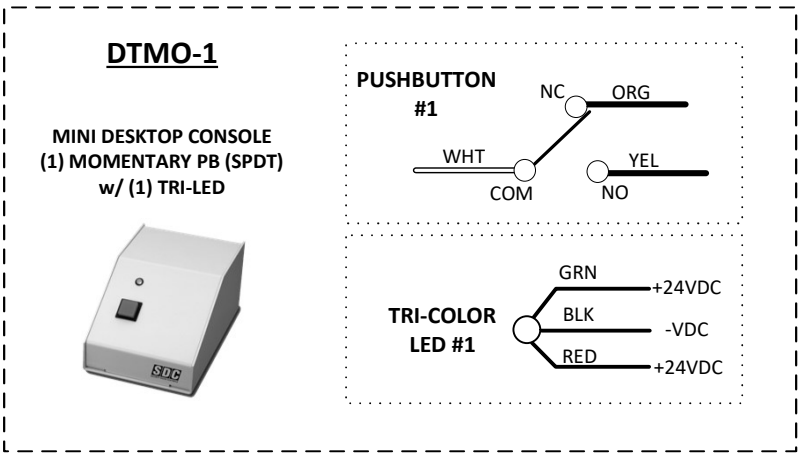

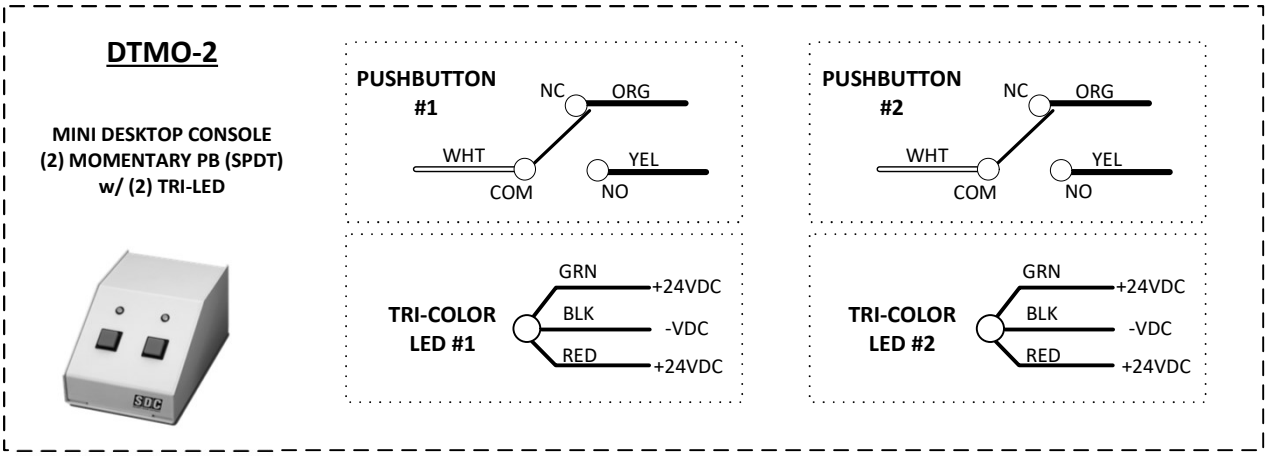

NOTES:

1. **DTMOMA-2 HAS ONE MOMENTARY PUSHBUTTON, ONE ALTERNATE-ACTION PUSHBUTTON, & TWO LED.**
2. **DTMA-2 HAS TWO ALTERNATE-ACTION PUSHBUTTONS & TWO LED.**
3. **CONTACTS: 5A@30VDC SPDT**
4. **MINI-CONSOLE DIMENSIONS: 3.125" H x 4.125" W x 6.25" D**

Any suggestions or comments to this instruction or product are welcome. Please contact us through our website or email engineer@sdcsecurity.com