SRXV-CM
Corner Mount
Installation Guide

C6692M

Package Contents	
Items	1. Corner mount bracket, 2. M6X20mm screws x4. 3. M5X20mm screws x4, 4. Hex L wrench 5mm x1, 5. Hex L wrench 4mm x1, 6. M8 nut x2. 7. M4x15 screws x4

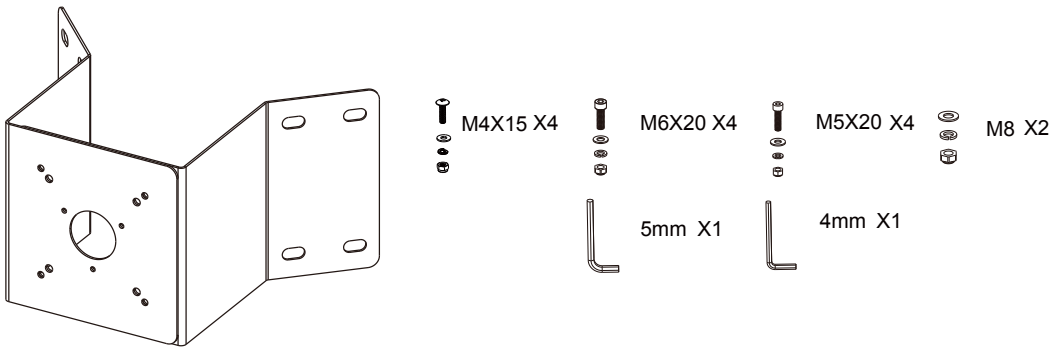

NOTE: Attachment without a conduit box is less recommended due to the lack of waterproof and cabling protection. If directly attached, you should properly wrap the read-end cables and connectors with waterproof protection such as putties.

Installation

Below is a general, sample procedure using a Corner mount bracket:

1. Combine the two metal pieces together using the M8 hex nuts and washers.
2. Align the assembled brackets with the desired position. Align screw holes on the brackets against the wall. Drill holes on the wall for securing the bracket and for routing the cables. Hammer the anchors into the wall. Note that these screws and wall anchors are user-supplied.

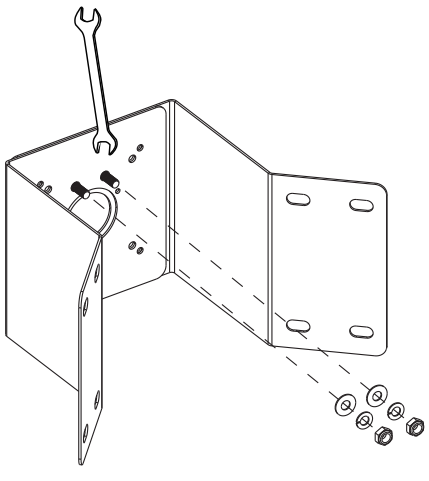

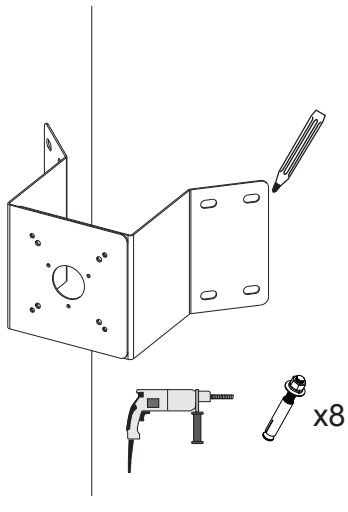

3. Hole configurations:

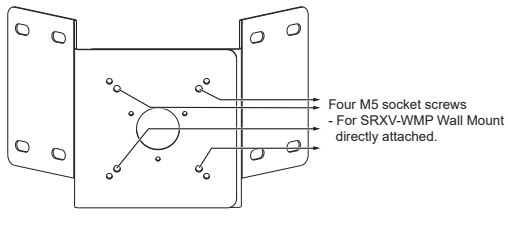

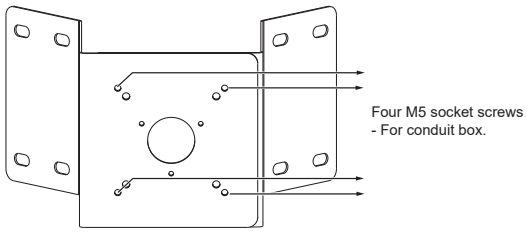

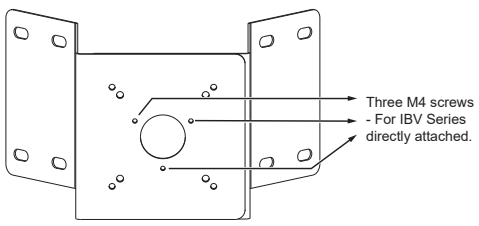

Mechanical Drawings

SRXV-CM Corner mount

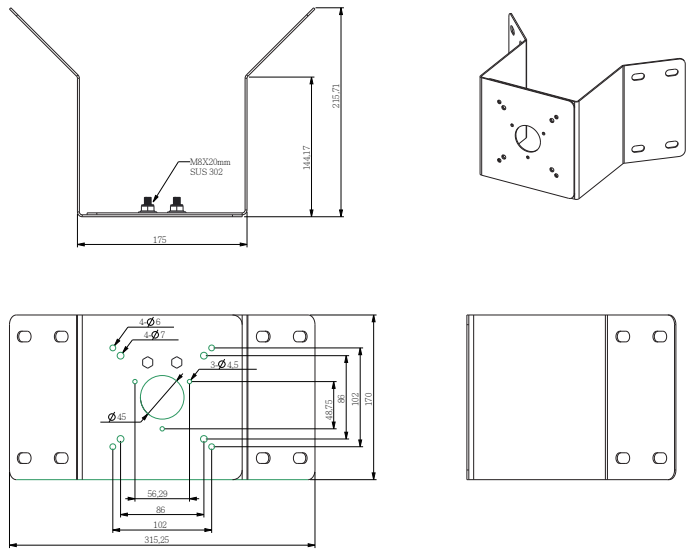

4. Secure the conduit box, wall arm, or bullet camera to bracket using the screws, washers, and hex heads. A hex crescent wrench is required.

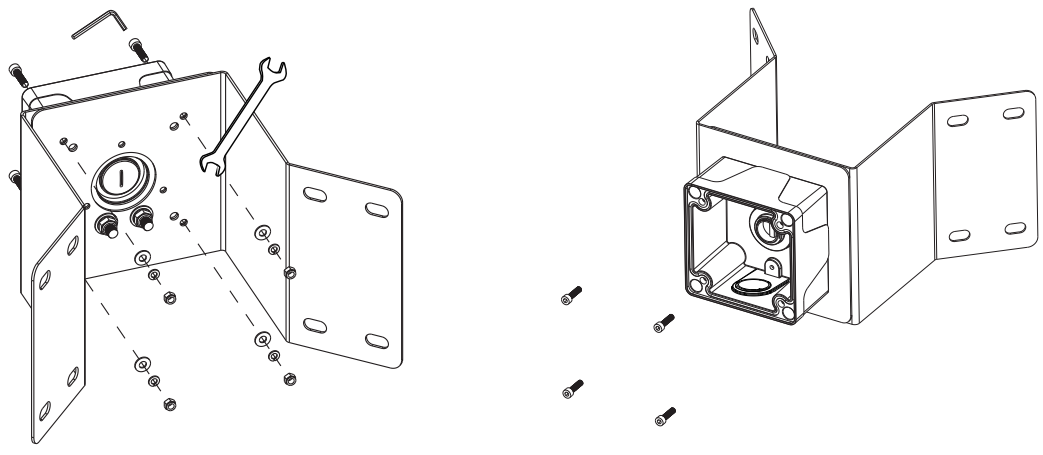

5. For the rest of the installation procedure, refer to the documentation that came with the other accessories.

The 3/4" cable glands and conduts for protecting cables are user-supplied.

Pelco, Inc.
625 W. Alluvial, Fresno, California 93711 United States
USA & Canada Tel (800) 289-9100 Fax (800) 289-9150
International Tel +1 (559) 292-1981 Fax +1 (55() 348-1120
www.pelco.com