AVYCON

AVC-PN92X30LW/C

2MP NETWORK IR OUTDOOR PTZ CAMERA

IP CAMERA

FUNCTION

- 1/2.8" Progressive Scan CMOS
- Full 2.1MP / 1080P Resolution
- H.264 / MPEG4 supported formats
- 30x Optical Zoom (65.1° ~ 2.34° Horizontal FOV)
- PTZ Range: Pan: 360° endless: Tilt 5° ~ 90° (Auto Flip)
- True Day Night, Auto White Balance, BLC, DWDR and 3D DNR supported
- Up to 300ft. IR Illumination with Smart IR
- Alarm Inputs / Outputs: 2/1
- Audio Input and Output
- Support for microSD memory card (128GB Max.)
- Supports ONVIF, PSIA and CGI
- IP66 Rated
- 24VAC / 2A Power or Hi-PoE (30W / 21W - IR On / Off)
- Available with ceiling mount (AVC-PN92X30LC) or wall mount (AVC-PN92X30LW)

2MP PoE ICR i-DNR NOISE REDUCTION DAY & NIGHT D-WDR IP66

DIMENSIONS

Unit : mm(inch)

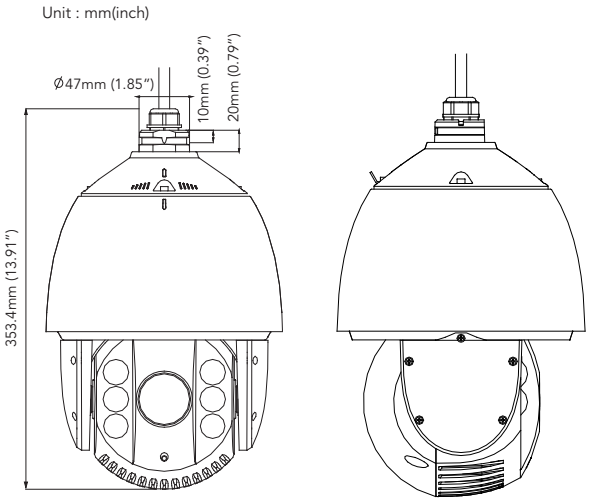

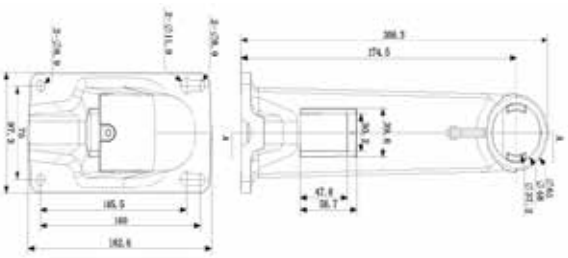

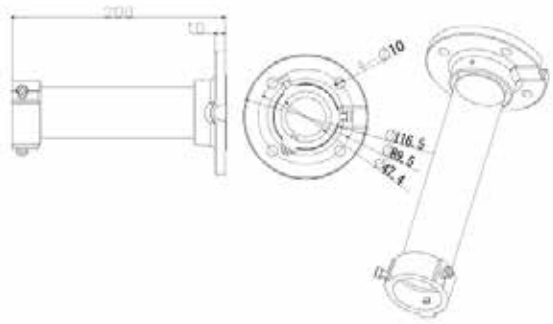

SPECIFICATION

DESCRIPTION	NTSC	PAL
Image Sensor	1/2.8" Progressive Scan CMOS	
Effective Pixel	3270K Pixels	
Min. Illumination	Color: 0.05Lux (F1.6, 1/30 sec, 50 IRE, AGC On) B / W: 0.01Lux (F1.6, 1/30 sec, 50 IRE, AGC On) / 0Lux with IR	
White Balance	Auto / Manual / ATW / Indoor / Outdoor / Daylight Lamp / Sodium Lamp	
Auto Gain Control (AGC)	Auto / Manual	
S/N Ratio	≥ 52dB	
3D DNR	Support	
Backlight Compensation (BLC)	Support	
HLC	Support	
DWDR	Support	
Defog	Support	
Shutter Time	1 ~ 1/10,000s	
Day & Night	IR Cut Filter	
Digital Zoom	16x	
Privacy Mask	2 privacy masks programmable	
Focus Mode	Auto / Semi-automatic / Manual	
Focal Length	4.3 ~ 129mm, 30×	
Zoom Speed	Approx. 3s (Optical Wide - Tele)	
Angle of View	65.1 ~ 2.34 degree (Wide - Tele)	
Min. Working Distance	10 ~ 1500mm (Wide - Tele)	
Aperture Range	F1.6 ~ F5.0	
Pan Range	360° Endless	
Pan Speed	Pan Manual Speed: 0.1° ~ 160°/s, Pan Preset Speed: 240°/s	
Tilt Range	-15° ~ 90° (Auto Flip)	
Tilt Speed	Tilt Manual Speed: 0.1° ~ 120°/s, Tilt Preset Speed: 200°/s	
Proportional Zoom	Rotation speed can be adjusted automatically according to zoom multiples	
Number of Preset	300	
Park action	Pattern / Pan scan / Tilt scan / Frame scan / Panorama scan / Random scan	
Patrol	8 patrols, up to 32 presets per patrol	
Power-off Memory	Support	
PTZ Position Display	On / Off	
Preset Freezing	Support	
Scheduled Task	Auto Scan / Frame Scan / Random Scan / Patrol / Pattern / Preset / Panorama Scan / Tilt Scan / Dome Reboot / Dome Adjust / Aux Output	
IR Distance	6 HI POWER AIB™ IRs (300ft.*)	
IR Intensity	Automatically adjusted, depending on the zoom ratio	
Alarm Input	2 (0 ~ 5V DC)	
Alarm Output	1 relay output, alarm response actions configurable	
Alarm Trigger	Intrusion detection, Line crossing detection, Motion detection, Audio exception detection, Dynamic analysis, Tampering alarm, Network disconnect, IP address conflict, Storage exception	
Alarm Actions	Preset, Patrol, Pattern, Recording, Relay output, Upload center, Upload FTP, Email linkage	
Audio Input	1 Audio input (Mic / Line in), 2 ~ 2.4V [p-p]; output impedance: 1KΩ, ±10%	
Audio Output	1 Output, Line level, impedance: 600Ω	
Ethernet	10Base ~ T / 100Base ~ TX, RJ45 Connector	
Max. Image Resolution	1920 × 1080	
Frame Rate	50Hz: 25 FPS (1920 × 1080), 25 FPS (1280 × 960), 25 FPS (1280 × 720) 60Hz: 30 FPS (1920 × 1080), 30 FPS (1280 × 960), 30 FPS (1280 × 720)	
Image Compression	H.264 / MJPEG	
ROI Encoding	Support 2 areas with adjustable levels	
Audio Compression	G.711 / G.722 / G.726 / MP2L2	
Protocols	IPv4 / IPv6, HTTP, HTTPS, 802.1X, QoS, FTP, SMTP, UPnP, SNMP, DNS, DDNS, NTP, RTSP, RTP, TCP, UDP, IGMP, ICMP, DHCP, PPPoE	
Number of Simultaneous Live View	Up to 20	
Dual Streams	Support	
Mini SD Memory Card	Micro SD Slot, up to 128GB, edge recording	
User/Host Level	Up to 32 users, 3 levels: administrator, operator and user	
Security Measures	User Authentication (ID and PW), Host Authentication (MAC address), IP Address Filtering	
Interface for Application Programming	Open-ended API, support Onvif, PSIA and CGI Support EZVIZ Cloud P2P	
Web Browser	IE 7+, Chrome 18+, Firefox 5.0+, Safari 5.02+	
Power	Hi-PoE & 24 VAC / Max. 30W (IR LED On) / Max. 21W (IR LED Off)	
Working Temperature/Humidity	−30°C ~ 60°C (−22°F ~ 140°F) / 90% or less	
Protection Level	IP66 standard TVS 4,000V lightning protection, surge protection and voltage transient protection	
Mounting	Various mounting modes optional	
Dimensions	Φ220 × 353.4mm (Φ8.66" × 13.91")	
Weight (approx.)	4.5kg (9.92lbs)	

*IR distance range varies depending on the environment